AUTHENTICATED
U.S. GOVERNMENT
INFORMATION
GPO

FEDERAL REGISTER

Vol. 79 Friday,
No. 133 July 11, 2014

Pages 39953–40618

OFFICE OF THE FEDERAL REGISTER

The **FEDERAL REGISTER** (ISSN 0097–6326) is published daily, Monday through Friday, except official holidays, by the Office of the Federal Register, National Archives and Records Administration, Washington, DC 20408, under the Federal Register Act (44 U.S.C. Ch. 15) and the regulations of the Administrative Committee of the Federal Register (1 CFR Ch. I). The Superintendent of Documents, U.S. Government Printing Office, Washington, DC 20402 is the exclusive distributor of the official edition. Periodicals postage is paid at Washington, DC.

The **FEDERAL REGISTER** provides a uniform system for making available to the public regulations and legal notices issued by Federal agencies. These include Presidential proclamations and Executive Orders, Federal agency documents having general applicability and legal effect, documents required to be published by act of Congress, and other Federal agency documents of public interest.

Documents are on file for public inspection in the Office of the Federal Register the day before they are published, unless the issuing agency requests earlier filing. For a list of documents currently on file for public inspection, see *www.ofr.gov.*

The seal of the National Archives and Records Administration authenticates the Federal Register as the official serial publication established under the Federal Register Act. Under 44 U.S.C. 1507, the contents of the **Federal Register** shall be judicially noticed.

The **Federal Register** is published in paper and on 24x microfiche. It is also available online at no charge at *www.fdsys.gov*, a service of the U.S. Government Printing Office.

The online edition of the **Federal Register** is issued under the authority of the Administrative Committee of the Federal Register as the official legal equivalent of the paper and microfiche editions (44 U.S.C. 4101 and 1 CFR 5.10). It is updated by 6:00 a.m. each day the **Federal Register** is published and includes both text and graphics from Volume 59, 1 (January 2, 1994) forward. For more information, contact the GPO Customer Contact Center, U.S. Government Printing Office. Phone 202-512-1800 or 866-512-1800 (toll free). E-mail, *gpocusthelp.com.*

The annual subscription price for the **Federal Register** paper edition is $749 plus postage, or $808, plus postage, for a combined **Federal Register, Federal Register** Index and List of CFR Sections Affected (LSA) subscription; the microfiche edition of the **Federal Register** including the **Federal Register** Index and LSA is $165, plus postage. Six month subscriptions are available for one-half the annual rate. The prevailing postal rates will be applied to orders according to the delivery method requested. The price of a single copy of the daily **Federal Register,** including postage, is based on the number of pages: $11 for an issue containing less than 200 pages; $22 for an issue containing 200 to 400 pages; and $33 for an issue containing more than 400 pages. Single issues of the microfiche edition may be purchased for $3 per copy, including postage. Remit check or money order, made payable to the Superintendent of Documents, or charge to your GPO Deposit Account, VISA, MasterCard, American Express, or Discover. Mail to: U.S. Government Printing Office—New Orders, P.O. Box 979050, St. Louis, MO 63197-9000; or call toll free 1-866-512-1800, DC area 202-512-1800; or go to the U.S. Government Online Bookstore site, see *bookstore.gpo.gov.*

There are no restrictions on the republication of material appearing in the **Federal Register.**

How To Cite This Publication: Use the volume number and the page number. Example: 77 FR 12345.

Postmaster: Send address changes to the Superintendent of Documents, Federal Register, U.S. Government Printing Office, Washington, DC 20402, along with the entire mailing label from the last issue received.

SUBSCRIPTIONS AND COPIES

PUBLIC

Subscriptions:

Paper or fiche	**202–512–1800**
Assistance with public subscriptions	**202–512–1806**
General online information	**202–512–1530; 1–888–293–6498**

Single copies/back copies:

Paper or fiche	**202–512–1800**
Assistance with public single copies	**1–866–512–1800 (Toll-Free)**

FEDERAL AGENCIES

Subscriptions:

Assistance with Federal agency subscriptions:

Email	*FRSubscriptions@nara.gov*
Phone	**202–741–6000**

Printed on recycled paper.

Contents

Federal Register

Vol. 79, No. 133

Friday, July 11, 2014

Agency for International Development
NOTICES
Meetings:
Advisory Committee on Voluntary Foreign Aid; Cancellation, 40058

Agriculture Department
NOTICES
Agency Information Collection Activities; Proposals, Submissions, and Approvals, 40058

Air Force Department
NOTICES
Privacy Act; Systems of Records, 40077–40079

Army Department
NOTICES
Privacy Act; Systems of Records, 40079–40083

Blind or Severely Disabled, Committee for Purchase From People Who Are
See Committee for Purchase From People Who Are Blind or Severely Disabled

Bonneville Power Administration
NOTICES
Environmental Impact Statements; Availability, etc.:
Hot Springs to Anaconda Transmission Line Rebuild Project, 40094–40095

Centers for Disease Control and Prevention
NOTICES
Meetings:
Board of Scientific Counselors, National Center for Injury Prevention and Control, 40104–40105

Centers for Medicare & Medicaid Services
PROPOSED RULES
Medicare Program:
End-Stage Renal Disease Prospective Payment System, Quality Incentive Program, and Durable Medical Equipment, Prosthetics, Orthotics, and Supplies, 40208–40315
Revisions to Payment Policies under the Physician Fee Schedule, Clinical Laboratory Fee Schedule, etc., 40318–40540
NOTICES
Agency Information Collection Activities; Proposals, Submissions, and Approvals, 40105–40107

Coast Guard
RULES
Drawbridge Operations:
Lake Washington Ship Canal, Seattle, WA, 39975
Special Local Regulations:
Music City Triathlon; Cumberland River, Nashville, TN, 39974–39975
Tennessee River, Florence, TN, 39972–39974
PROPOSED RULES
Special Local Regulations:
Great Race On The Sea, Powerboat Race, Atlantic Ocean, Long Beach, NY, 40032–40035
NOTICES
Meetings:
Great Lakes Pilotage Advisory Committee, 40126–40127

Commerce Department
See Economic Development Administration
See International Trade Administration
See National Oceanic and Atmospheric Administration
See Patent and Trademark Office
NOTICES
Agency Information Collection Activities; Proposals, Submissions, and Approvals, 40058–40059

Committee for Purchase From People Who Are Blind or Severely Disabled
NOTICES
Procurement List; Additions and Deletions, 40066–40068

Consumer Product Safety Commission
NOTICES
Carbon Monoxide Safety Poster Contest, 40068–40070

Corporation for National and Community Service
NOTICES
Agency Information Collection Activities; Proposals, Submissions, and Approvals:
Disaster Response Cooperative Agreement; Renewals, 40070–40072

Defense Department
See Air Force Department
See Army Department
See Navy Department
NOTICES
Privacy Act; Systems of Records, 40072–40077

Department of Transportation
See Pipeline and Hazardous Materials Safety Administration

Drug Enforcement Administration
NOTICES
Decisions and Orders:
Moore Clinical Trials, LLC, 40145–40160
Importers of Controlled Substances; Applications:
Research Triangle Institute, Research Triangle Park, NC, 40160–40162

Economic Development Administration
NOTICES
Trade Adjustment Assistance Eligibility; Petitions, 40059

Education Department
NOTICES
Free Application for Federal Student Aid, Federal Pell Grant Program, William D. Ford Federal Direct Loan Program, etc.:
Deadline Dates for Reports and Other Records, 40084–40092
Requests for Information:
Addressing Significant Disproportionality Under the Individuals with Disabilities Education Act, 40092

Energy Department
See Bonneville Power Administration
See Federal Energy Regulatory Commission
RULES
Energy Conservation Program for Consumer Products and Certain Commercial and Industrial Equipment:
Test Procedures for Residential and Commercial Water Heaters, 40542–40588
NOTICES
Meetings:
Quadrennial Energy Review, 40092–40094

Environmental Protection Agency
RULES
Pesticide Products and Devices:
Labeling for Export; Withdrawal, 39975–39976
PROPOSED RULES
Pesticide Products and Devices:
Labeling for Export; Requirements Clarification, 40040–40043
Pesticide Tolerances:
Amitraz, Carfentrazone–ethyl, Ethephon, Malathion, Mancozeb, et al., 40043–40054
NOTICES
Consent Decrees:
Clean Air Act Citizen Suit, 40098–40100
Environmental Impact Statements; Availability, etc.:
Weekly Receipts, 40100
Meetings:
Science Advisory Board Advisory Panel on EPA's Report on the Environment 2014, 40101–40103
Science Advisory Board Panel; Teleconferences, 40100–40101
Public Water System Supervision Program Revision for the State of Mississippi, 40103

Executive Office for Immigration Review
RULES
Designation of Temporary Immigration Judges, 39953–39956

Export-Import Bank
NOTICES
Applications:
Final Commitment for a Long-Term Loan or Financial Guarantee in Excess of $100 Million, 40103–40104

Federal Aviation Administration
RULES
Airworthiness Directives:
AERMACCHI S.p.A. Airplanes, 39959–39961
Honeywell International Inc. (Type Certificate previously held by AlliedSignal Inc., Garrett Turbine Engine Company) Turbofan Engines, 39961–39963
Pratt and Whitney Canada Corp. Turboprop Engines, 39958–39959
Rolls-Royce plc Turbofan Engines, 39956–39958
Standard Instrument Approach Procedures, and Takeoff Minimums and Obstacle Departure Procedures, 39963–39972
PROPOSED RULES
Airworthiness Directives:
Rolls-Royce plc Turbofan Engines, 40018–40019

Federal Communications Commission
RULES
Internet Protocol Captioned Telephone Service Misuse:
Telecommunications Relay Services and Speech-to-Speech Services for Individuals with Hearing and Speech Disabilities, 40003–40004
Policies Regarding Mobile Spectrum Holdings:
Expanding the Economic and Innovation Opportunities of Spectrum Through Incentive Auctions, 39977–40003
Radio Experimentation and Market Trials, 39976–39977

Federal Energy Regulatory Commission
NOTICES
Applications:
Transcontinental Gas Pipe Line Co.,, LLC, 40095
Complaints:
Calpine Construction Finance Co., LP v. Tampa Electric Co., 40096
Compliance Filings:
New York Independent System Operator, Inc., 40096
Enforcement Petitions:
LoneStar Wind Power Co., NorthStar Wind Power Co., WindStar Power Co. v. South Texas Electric Co-Operative, 40096–40097
Environmental Site Reviews:
Pacific Gas and Electric Co. and Santa Clara, CA, 40097
Petitions for Declaratory Orders:
Enbridge Offshore Facilities, LLC, 40097–40098
Requests under Blanket Authorization:
WBI Energy Transmission, Inc., 40098

Federal Highway Administration
NOTICES
Final Federal Agency Actions:
Proposed Highway in North Carolina, 40191–40192

Federal Motor Carrier Safety Administration
NOTICES
Agency Information Collection Activities; Proposals, Submissions, and Approvals:
Collection of Qualitative Feedback on Agency Service Delivery, 40192–40193
Meetings:
Medical Review Board, 40193
Qualification of Drivers; Exemption Applications:
Vision, 40193–40195

Federal Railroad Administration
NOTICES
Funding Availability:
Intercity Passenger Rail Grade Crossing Improvements, Positive Train Control Implementation, and Passenger Rail Corridor Investment Plan Grant Funds, 40195–40204

Federal Reserve System
NOTICES
Changes in Bank Control:
Acquisitions of Shares of a Bank or Bank Holding Company, 40104
Formations of, Acquisitions by, and Mergers of Bank Holding Companies, 40104

Fish and Wildlife Service
NOTICES
Meetings:
Sport Fishing and Boating Partnership Council; Teleconference, 40139

Food and Drug Administration
NOTICES
Agency Information Collection Activities; Proposals, Submissions, and Approvals:
Guidance for Industry on Establishing that a Tobacco Product was Commercially Marketed in the United States as of February 15, 2007, 40107–40108
Determination of Regulatory Review Period for Purposes of Patent Extensions:
HORIZANT, 40108–40109
Guidance for Industry:
Abbreviated New Drug Application Submissions; Amendments and Easily Correctable Deficiencies Under the Generic Drug User Fee Amendments; Availability, 40111–40112
Abbreviated New Drug Application Submissions—Prior Approval Supplements Under the Generic Drug User Fee Amendments of 2012; Availability, 40112–40113
Reporting Drug Sample Information Under Section 6004 of the Affordable Care Act; Availability, 40109–40111
Meetings:
National Antimicrobial Resistance Monitoring System, 40113–40114

Health and Human Services Department
See Centers for Disease Control and Prevention
See Centers for Medicare & Medicaid Services
See Food and Drug Administration
See Inspector General Office, Health and Human Services Department
See National Institutes of Health

Homeland Security Department
See Coast Guard
See U.S. Customs and Border Protection
NOTICES
Cancellation of Customs Broker Licenses Due to Death of the License Holder, 40123–40124
Privacy Act; Systems of Records, 40124–40126

Housing and Urban Development Department
PROPOSED RULES
Streamlining Requirements Applicable to Formation of Consortia by Public Housing Agencies, 40019–40031
NOTICES
Agency Information Collection Activities; Proposals, Submissions, and Approvals:
Annual Adjustment Factors Rent Increase Requirement, 40129–40130
Energy Evaluation of Public Housing Capital Fund, etc., 40130
Federal Housing Administration Multifamily Rental Project Closing Documents, 40131–40132
Request for Prepayment of Section 202 or 202/8 Direct Loan Project, 40132–40133
Community Development Block Grant Disaster Recovery Funds; Additional Clarifying Guidance, Waivers, and Alternative Requirements, 40133–40137
Federal Properties Suitable as Facilities to Assist the Homeless, 40137–40139

Inspector General Office, Health and Human Services Department
NOTICES
Requests for Information and Recommendations:
Non-Binding Criteria for Implementing Permissive Exclusion Authority under the Social Security Act, 40114–40115
Special Fraud Alerts:
Laboratory Payments to Referring Physicians, 40115–40118

Interior Department
See Fish and Wildlife Service
See Land Management Bureau
See National Park Service

Internal Revenue Service
PROPOSED RULES
Individual Retirement Plans and Simplified Employee Pensions; Partial Withdrawal, 40031–40032

International Trade Administration
NOTICES
Antidumping Duty Administrative Reviews; Results, Extensions, Amendments, etc.:
Certain Frozen Fish Fillets from the Socialist Republic of Vietnam, 40059–40062
Diamond Sawblades and Parts Thereof from the People's Republic of China; Expedited Sunset Reviews, 40062–40063
Solid Urea from the Russian Federation, 40063–40065

International Trade Commission
NOTICES
Investigations; Determinations, Modifications and Rulings, etc.:
Non-Oriented Electrical Steel from China, Germany, Japan, Korea, Sweden, and Taiwan, 40143–40145

Justice Department
See Drug Enforcement Administration
See Executive Office for Immigration Review
See National Institute of Justice
NOTICES
Consent Decrees under CERCLA, 40145

Land Management Bureau
NOTICES
Invitation to Participate:
Coal Exploration License Application UTU–90194, Sevier County, UT, 40140–40141
Coal Exploration License Application WYW183321, Wyoming, 40140
License Applications:
Coal Exploration; BNI Coal Ltd.; Oliver County, ND, 40141
Public Land Orders:
California; Partial Revocations, 40141–40142
Realty Actions:
Non-Competitive Land Use Authorization of Public Lands in the Fairbanks North Star Borough, AK, 40142

National Archives and Records Administration
NOTICES
Meetings:
State, Local, Tribal, and Private Sector Policy Advisory Committee, 40163

National Institute of Justice
NOTICES
Compliance Testing Program's Compliant Product List for Ballistic Body Armor, 40162
License Plate Reader Manufacturer Practical Assessment of Proposed Test Methods, 40162–40163

National Institutes of Health
NOTICES
Exclusive Licenses:
Development of a Diagnostic and Prognostic for Breast and Prostate Cancer Using Spatial Genome Organization, 40119–40120
Development of Granulysin Immunotherapy, 40118–40119
Development of Molecular-Based Cancer Diagnostic and Prognostic, 40120
Government-Owned Inventions; Availability for Licensing, 40120–40122
Meetings:
National Institute of Environmental Health Sciences, 40122
National Institute of General Medical Sciences, 40122–40123

National Oceanic and Atmospheric Administration
RULES
Endangered and Threatened Species:
Designation of Nonessential Experimental Population of Upper Columbia River Spring-run Chinook Salmon, Okanogan River Subbasin, WA, 40004–40016
Fisheries of the Exclusive Economic Zone Off Alaska:
Other Flatfish in the Bering Sea and Aleutian Islands Management Area, 40016–40017
PROPOSED RULES
Endangered and Threatened Wildlife:
Humpback Whale; Central North Pacific Population; Petition Finding, 40054–40055
International Fisheries:
Western and Central Pacific Fisheries for Highly Migratory Species; Fishing Capacity Limits in Purse Seine and Longline Fisheries, 40055–40057
NOTICES
Meetings:
Gulf of Mexico Fishery Management Council, 40066
New England Fishery Management Council, 40065
Pacific Fishery Management Council, 40065–40066

National Park Service
NOTICES
National Register of Historic Places:
Pending Nominations and Related Actions, 40142–40143

Navy Department
NOTICES
Exclusive, Non-Exclusive, or Partially-Exclusive Licensing of Inventions:
Xtreme Alternative Defense Systems Ltd., 40083–40084
Government-Owned Inventions Available for Licensing, 40084
Partially Exclusive Patent License Approvals:
Xtreme Alternative Defense Systems Ltd., 40084

Nuclear Regulatory Commission
NOTICES
Guidance:
Setpoints for Safety-Related Instrumentation, 40163–40164
License Amendment Applications:
Mallinckrodt LLC, 40165–40167
Meetings; Sunshine Act, 40167–40168

Patent and Trademark Office
PROPOSED RULES
Authorization of Access to Unpublished U.S. Patent Applications by Foreign Intellectual Property Offices, 40035–40040

Pipeline and Hazardous Materials Safety Administration
RULES
Hazardous Materials:
Compatibility with the Regulations of the International Atomic Energy Agency, 40590–40618

Postal Regulatory Commission
NOTICES
New Postal Products, 40168–40169
Postal Product Amendment, 40169

Securities and Exchange Commission
NOTICES
Self-Regulatory Organizations; Proposed Rule Changes:
BOX Options Exchange, LLC, 40182–40183
NASDAQ OMX PHLX, LLC, 40175–40177
New York Stock Exchange, LLC, 40183–40188
NYSE MKT, LLC, 40169–40174
The NASDAQ Stock Market, LLC, 40174–40175
The Options Clearing Corp., 40177–40182

State Department
RULES
Debt Collection; Correction, 39972

Surface Transportation Board
NOTICES
Acquisition Exemptions:
Blue Ridge Southern Railroad, LLC; Norfolk Southern Railway Co., 40204
Continuance in Control Exemptions:
Watco Holdings, Inc.; Blue Ridge Southern Railroad, LLC, 40204–40205

Susquehanna River Basin Commission
NOTICES
Projects Approved for Consumptive Uses of Water, 40189–40191
Public Hearings:
Susquehanna River Basin Commission, 40188–40189

Transportation Department
See Federal Aviation Administration
See Federal Highway Administration
See Federal Motor Carrier Safety Administration
See Federal Railroad Administration
See Pipeline and Hazardous Materials Safety Administration
See Surface Transportation Board

Treasury Department
See Internal Revenue Service

U.S. Customs and Border Protection
NOTICES
Agency Information Collection Activities; Proposals, Submissions, and Approvals:
Automated Clearinghouse, 40127
NAFTA Regulations and Certificate of Origin, 40128–40129
Record of Vessel Foreign Repair or Equipment Purchase, 40127–40128

Veterans Affairs Department
NOTICES
Agency Information Collection Activities; Proposals, Submissions, and Approvals:
Call Center Satisfaction Survey, 40205

Separate Parts In This Issue

Part II
Health and Human Services Department, Centers for Medicare & Medicaid Services, 40208–40315

Part III
Health and Human Services Department, Centers for Medicare & Medicaid Services, 40318–40540

Part IV
Energy Department, 40542–40588

Part V
Transportation Department, Pipeline and Hazardous Materials Safety Administration, 40590–40618

Reader Aids

Consult the Reader Aids section at the end of this page for phone numbers, online resources, finding aids, reminders, and notice of recently enacted public laws.

To subscribe to the Federal Register Table of Contents LISTSERV electronic mailing list, go to http://listserv.access.gpo.gov and select Online mailing list archives, FEDREGTOC-L, Join or leave the list (or change settings); then follow the instructions.

CFR PARTS AFFECTED IN THIS ISSUE

A cumulative list of the parts affected this month can be found in the Reader Aids section at the end of this issue.

8 CFR
1003 39953

10 CFR
429 40542
430 40542
431 40542

14 CFR
39 (4 documents) 39956, 39958, 39959, 39961
97 (2 documents) 39963, 39970

Proposed Rules:
39 40018

22 CFR
34 39972

24 CFR

Proposed Rules:
5 40019
943 40019

26 CFR

Proposed Rules:
1 40031

33 CFR
100 (2 documents) 39972, 39974
117 39975

Proposed Rules:
100 40032

37 CFR

Proposed Rules:
1 40035

40 CFR
168 39975

Proposed Rules:
168 40040
180 40043

42 CFR

Proposed Rules:
403 40318
405 (2 documents) 40208, 40318
410 40318
411 40208
413 40208
414 (2 documents) 40208, 40318
425 40318
498 40318

47 CFR
2 39976
20 39977
64 40003

49 CFR
171 40590
172 40590
173 40590
174 40590
175 40590
176 40590
177 40590
178 40590

50 CFR
223 40004
679 40016

Proposed Rules:
223 40054
224 40054
300 40055

Rules and Regulations

Federal Register
Vol. 79, No. 133
Friday, July 11, 2014

This section of the FEDERAL REGISTER contains regulatory documents having general applicability and legal effect, most of which are keyed to and codified in the Code of Federal Regulations, which is published under 50 titles pursuant to 44 U.S.C. 1510.

The Code of Federal Regulations is sold by the Superintendent of Documents. Prices of new books are listed in the first FEDERAL REGISTER issue of each week.

DEPARTMENT OF JUSTICE

Executive Office for Immigration Review

8 CFR Part 1003

[EOIR Docket No. 177; AG Order No. 3447–2014]

RIN 1125–AA77

Designation of Temporary Immigration Judges

AGENCY: Executive Office for Immigration Review, Department of Justice.

ACTION: Interim rule with request for comments.

SUMMARY: This rule amends the Executive Office for Immigration Review (EOIR) regulations relating to the organization of the Office of the Chief Immigration Judge (OCIJ) to allow the Director of EOIR to designate or select, with the approval of the Attorney General, temporary immigration judges.

DATES: *Effective Date:* This rule is effective July 11, 2014. Written comments must be submitted on or before September 9, 2014. Comments received by mail will be considered timely if they are postmarked on or before that date. The electronic Federal Docket Management System (FDMS) will accept comments until midnight eastern time at the end of that day.

ADDRESSES: Please submit written comments to Jeff Rosenblum, General Counsel, Executive Office for Immigration Review, 5107 Leesburg Pike, Suite 2600, Falls Church, Virginia 20530. To ensure proper handling, please reference RIN No. 1125–AA77 or EOIR docket No. 177 on your correspondence. You may submit comments electronically or view an electronic version of this interim rule at *www.regulations.gov*.

FOR FURTHER INFORMATION CONTACT: Jeff Rosenblum, General Counsel, Executive Office for Immigration Review, 5107 Leesburg Pike, Suite 2600, Falls Church, Virginia 20530; telephone (703) 305–0470 (not a toll-free call).

SUPPLEMENTARY INFORMATION:

I. Posting of Public Comments

Please note that all comments received are considered part of the public record and made available for public inspection online at *www.regulations.gov*. Such information includes personally identifiable information (such as your name, address, etc.) voluntarily submitted by the commenter.

If you want to submit personally identifiable information (such as your name, address, etc.) as part of your comment, but do not want it to be posted online, you must include the phrase ''PERSONALLY IDENTIFIABLE INFORMATION'' in the first paragraph of your comment. You must also locate all the personally identifiable information you do not want posted online in the first paragraph of your comment and identify what information you want redacted.

If you want to submit confidential business information as part of your comment but do not want it to be posted online, you must include the phrase ''CONFIDENTIAL BUSINESS INFORMATION'' in the first paragraph of your comment. You must also prominently identify confidential business information to be redacted within the comment. If a comment has so much confidential business information that it cannot be effectively redacted, all or part of that comment may not be posted on *http://www.regulations.gov*.

Personally identifiable information identified and located as set forth above will be placed in the agency's public docket file, but not posted online. Confidential business information identified and located as set forth above will not be placed in the public docket file. If you wish to inspect the agency's public docket file in person by appointment, please see the ''For Further Information Contact'' paragraph.

II. Background

The Executive Office for Immigration Review (EOIR) administers the nation's immigration court system. EOIR primarily decides whether foreign-born individuals who are charged by the Department of Homeland Security (DHS) with violating immigration law pursuant to the Immigration and Nationality Act (INA) should be ordered removed from the United States, or should be granted relief or protection from removal and be permitted to remain in the United States.[1] EOIR is also responsible for conducting other immigration-related adjudications, including hearings regarding custody or bond determinations made by DHS.

To make these critical determinations, EOIR's Office of the Chief Immigration Judge (OCIJ) has approximately 250 immigration judges who conduct administrative court proceedings, in 59 immigration courts nationwide. EOIR's appellate component, the Board of Immigration Appeals (Board), primarily decides appeals of immigration judge decisions. The Board is the highest administrative tribunal for interpreting and applying U.S. immigration law. EOIR is a component of the Department of Justice (DOJ or Department).

The immigration judges are attorneys appointed by the Attorney General as administrative judges qualified to conduct the cases assigned to them. They are subject to the supervision of the Attorney General in performing their prescribed duties, but, subject to the applicable governing standards, exercise independent judgment and discretion in considering and determining the cases before them. *See* INA sec. 101(b)(4) (8 U.S.C. 1101(b)(4)); 8 CFR 1003.10(b), (d). Decisions of the immigration judges are subject to review by the Board pursuant to 8 CFR 1003.1(a)(1) and (d)(1); in turn, the Board's decisions can be reviewed by the Attorney General, as provided in 8 CFR 1003.1(g) and (h). Decisions of the Board and the Attorney General are subject to judicial review.

III. Proposal for Designation of Temporary Immigration Judges

EOIR's mission is to adjudicate immigration cases by fairly, expeditiously, and uniformly interpreting and administering the Nation's immigration laws. In order to more efficiently accomplish the agency's commitment to promptly

[1] Generally, cases commence before an immigration judge when DHS files a charging document against an alien with the immigration court. *See* 8 CFR 1003.14(a).

decide the large volume of immigration cases, this rule amends the agency's regulations relating to the organization of OCIJ to allow the Director of EOIR to designate or select, with the approval of the Attorney General, one or more temporary immigration judges.

EOIR is currently managing the largest caseload the immigration court system has ever seen. Due to attrition in the immigration judge corps and continuing budgetary restrictions, the Department believes that the designation of temporary immigration judges will provide an appropriate means of flexibility in responding to the increased challenges facing the immigration courts.

An issue of continuing concern to the Department is EOIR's pending caseload in the immigration courts. At the end of FY 2013, there were 350,330 cases pending at the immigration courts, marking an increase of 22,901 cases pending above those at the end of FY 2012. *See* 2013 EOIR Stat. Y.B. W1.[2] Of those, 38 percent were received prior to FY 2012. *Id.* As DHS continues its obligation to enforce the immigration laws of the United States, EOIR anticipates that its caseload will continue to increase, especially as DHS continues to use new technologies to increase efficiencies in the identification, apprehension, detention, and removal of aliens.

Even without a continually increasing caseload, the dockets currently handled by the immigration judge corps are substantial. At the end of FY 2013, 350,330 pending cases were being handled by approximately 250 immigration judges, averaging 1,401 matters per immigration judge.[3] By comparison, a recent study indicated that judges for the Board of Veterans' Appeals hear approximately 700 cases each year per judge and Social Security Administration administrative law judges decide approximately 500 cases each year per judge.[4] There is a particular need to assist EOIR's larger courts, namely New York, NY; Los Angeles, CA; San Antonio, TX; San Francisco, CA; Pearsall, TX, which received 43 percent of all asylum applications (15,661) filed with the immigration courts in FY 2013. *See* 2013 EOIR Stat. Y.B. J3. EOIR must be poised to handle not only its routine workload, but also emergency or special situations, such as a sudden influx of asylum seekers.

In response to increases in immigration court workload and DOJ priorities, EOIR undertook a major initiative that resulted in the hiring of more than 50 new immigration judges during FY 2010 and through the second quarter of FY 2011. However, as of June 2014, attrition and budgetary restrictions resulted in a net increase of only 13 immigration judges since FY 2009. The Department believes that the designation of temporary immigration judges will provide an appropriate means of responding to the increasing pending caseload in the immigration courts. While the designation of temporary immigration judges is not a substitute for the ongoing need to hire additional permanent immigration judges, designation of temporary immigration judges should improve EOIR's ability to adjudicate cases in a timely manner.

OCIJ provides overall program direction, articulates policies and procedures, and establishes priorities for the immigration courts. The Chief Immigration Judge will continue to monitor caseload volume, trends, and geographic concentration and will adjust resources accordingly. Where appropriate, temporary immigration judges could be assigned to a discrete category of cases, such as motions and bond proceedings, freeing up permanent immigration judge time to adjudicate more complicated removal cases and increase the number of matters EOIR could bring to a final disposition. From FY 2009 to FY 2013, approximately 70 percent of the cases before the immigration courts were completed without the alien applying for relief from removal. Bond-related matters, however, have increased by 12 percent from FY 2009 (51,584) to FY 2013 (57,699), along with a 104 percent increase in motions for change of venue and a 161 percent increase in case transfers over the same period. *See* 2013 EOIR Stat. Y.B. 11, A7.

However, to ensure the flexibility necessary to address record caseloads and to handle exigent circumstances, this rule would not limit the assignment of temporary immigration judges in the type of cases they may adjudicate, except as otherwise provided by the Chief Immigration Judge, per the authority granted in 8 CFR 1003.9 and in this interim rule. As discussed below, the Chief Immigration Judge will be responsible for ensuring that each temporary immigration judge has the necessary training, experience, and skills to properly adjudicate the matters assigned.

This rule amends EOIR's regulations at 8 CFR 1003.10 by adding a new paragraph (e). The amendments will allow the Director of EOIR to designate or select, with the approval of the Attorney General, former Board members, former immigration judges, administrative law judges employed within or retired from EOIR, and administrative law judges from other Executive Branch agencies to act as temporary immigration judges for renewable six-month terms. Administrative law judges from other agencies must have the consent of their agencies to be designated as temporary immigration judges. In addition, the Director of EOIR will be able to designate, with the approval of the Attorney General, attorneys who have at least 10 years of legal experience in the field of immigration law and are currently employed by the Department of Justice to act as temporary immigration judges for renewable six-month terms. The 10 years of experience must be gained after admission to the bar and may be gained through employment by the federal, state, or local government, the private sector, universities, non-governmental organizations, or a combination of such experience. In order to allow greater flexibility, the rule does not specify particular titles or job descriptions for Department attorneys with 10 years of immigration law experience. Accordingly, attorneys at the Department with 10 years of immigration law experience may qualify for designation as temporary immigration judges.

In evaluating candidates for designation as a temporary immigration judge, EOIR anticipates that it will generally employ the same selection criteria and process it applies with respect to the hiring of permanent immigration judges. Characteristics that would qualify a candidate for designation as a temporary immigration judge include the ability to demonstrate the appropriate temperament to serve as a judge; knowledge of immigration laws and procedures; substantial litigation experience, preferably in a high-volume context; experience handling complex legal issues; experience conducting administrative hearings; and knowledge of practices and procedures. Designation of such individuals will help ensure efficiency in the adjudication of removal cases and preserve the integrity of the overall process, without sacrificing

[2] EOIR's FY2013 Statistical Year Book, prepared by EOIR's Office of Planning and Technology, is available at *http://www.justice.gov/eoir/statspub/fy13syb.pdf.*

[3] This average does not take into account attrition in the immigration judge corps during FY 2013 or the difference in docket size geographically or by docket type (*i.e.,* detained, non-detained, juvenile, and institutional hearing program).

[4] *See* American Bar Association Commission on Immigration, *Reforming the Immigration System: Proposals to Promote Independence, Fairness, Efficiency, and Professionalism in Adjudication,* at 2–37 (February 2010).

fairness and due process. As is the case for all immigration judges, EOIR provides a process for the filing and consideration of complaints.

IV. Training for Temporary Immigration Judges

Among EOIR's 2008–2013 strategic goals and objectives was the goal to provide for a workforce that is skilled, diverse, and committed to excellence, and that exhibits the highest standards of integrity. It is important that those who appear before EOIR's tribunals have trust in the agency and in the work that it does. EOIR is committed to providing training to new and experienced immigration judges, including temporary immigration judges.

EOIR will provide the training necessary for temporary immigration judges to perform the assigned duties. The Chief Immigration Judge may choose to specify particular types of matters for which each temporary immigration judge will be assigned, consistent with the individual's training and experience. Each judge will be supervised by the Assistant Chief Immigration Judge assigned to the local immigration court where the temporary immigration judge will be assigned. The Assistant Chief Immigration Judge will be available as an additional source of assistance and guidance, and will be responsible for conducting periodic reviews of the temporary immigration judge's performance and reporting his or her findings to the Chief Immigration Judge.

EOIR also ensures that immigration judges receive continuing education. For instance, in addition to new immigration judge training, EOIR held mandatory Immigration Judge Legal Training Conferences in 2009 and 2010 and Immigration Judge Legal Training Programs in 2011, 2012, and 2013. This training covered many substantive immigration legal issues, including those relating to asylum, criminal matters, bond, adjustment of status, and a variety of other topics. The training also provided information on subjects ranging from immigration cases involving unaccompanied alien children and respondents with mental competency issues to immigration fraud and courtroom management. Immigration Judge Legal Training Programs were recorded and will be available to temporary immigration judges.

OCIJ maintains an Immigration Judge Benchbook. The Benchbook includes scripts, introductory guides, checklists, worksheets, and sample orders as well as links to a number of immigration-related legal resources. OCIJ also maintains an Immigration Court Practice Manual, a comprehensive guide that sets forth uniform procedures, recommendations, and requirements for practice before the immigration courts. Additional resources for immigration judges are available through EOIR's virtual law library, which includes BIA decisions, circuit court decisions, regulations, and country-specific information.

Given the many training options and resources available to immigration judges, EOIR will provide training as necessary for the performance of each temporary immigration judge's assigned duties.

V. Public Comments

This rule is exempt from the usual requirements of prior notice and comment and a 30-day delay in effective date because, as an internal delegation of authority, it relates to a matter of agency organization, procedure, or practice. *See* 5 U.S.C. 553(b). The Department is nonetheless promulgating this rule as an interim rule with opportunity for post-promulgation comment. This will provide the public with an opportunity for comment before the Department issues a final rule on these matters.

VI. Regulatory Requirements

A. Regulatory Flexibility Act

Under the Regulatory Flexibility Act (RFA), ''[w]henever an agency is required by section 553 of [the RFA], or any other law, to publish general notice of proposed rulemaking for any proposed rule . . . the agency shall prepare and make available for public comment an initial regulatory flexibility analysis.'' 8 U.S.C. 603(a). Such analysis is not required when a rule is exempt from notice and comment rulemaking under 5 U.S.C. 553(b). Because this is a rule of internal agency organization and therefore is exempt from notice and comment rulemaking, no RFA analysis under 5 U.S.C. 603 is required for this rule.

B. Unfunded Mandates Reform Act of 1995

This rule will not result in the expenditure by State, local, and tribal governments, in the aggregate, or by the private sector, of $100 million or more in any one year, and it will not significantly or uniquely affect small governments. Therefore, no actions were deemed necessary under the provisions of the Unfunded Mandates Reform Act of 1995.

C. Small Business Regulatory Enforcement Fairness Act of 1996

This rule is not a major rule as defined by section 251 of the Small Business Regulatory Enforcement Fairness Act of 1996 (SBREFA), 5 U.S.C. 804. This rule will not result in an annual effect on the economy of $100 million or more; a major increase in costs or prices; or significant adverse effects on competition, employment, investment, productivity, innovation, or on the ability of United States-based enterprises to compete with foreign-based enterprises in domestic and export markets.

D. Executive Order 12866 and Executive Order 13563 (Regulatory Planning and Review)

The Department has determined that this rule is not a ''significant regulatory action'' under section 3(f) of Executive Order 12866, Regulatory Planning and Review, and the Office of Management and Budget has concurred in this determination. Nevertheless, the Department certifies that this regulation has been drafted in accordance with the principles of Executive Order 12866, section 1(b), and Executive Order 13563. Executive Orders 12866 and 13563 direct agencies to assess all costs and benefits of available regulatory alternatives and, if regulation is necessary, to select regulatory approaches that maximize net benefits, including consideration of potential economic, environmental, public health, and safety effects, distributive impacts, and equity. The benefits of this interim rule include providing the Department with an appropriate means of responding to current and future increases or surges in the number, size, or type of immigration court matters. The public will benefit from the designation of temporary immigration judges because such designations will help EOIR better accomplish its mission of adjudicating cases in a timely manner. Temporary immigration judges will receive appropriate training and supervision for this role. This rule will not have a substantial economic impact on Department functions to the extent that individuals who may act as temporary immigration judges are already employed by the Department. The Department does not foresee any burdens to the public or the Department.

E. Executive Order 13132 (Federalism)

This rule will not have substantial direct effects on the States, on the relationship between the national government and the States, or on the

distribution of power and responsibilities among the various levels of government. Therefore, in accordance with section 6 of Executive Order 13132, the Department has determined that this rule does not have sufficient federalism implications to warrant preparation of a federalism summary impact statement.

F. Executive Order 12988 (Civil Justice Reform)

This rule has been prepared in accordance with the standards in sections 3(a) and 3(b)(2) of Executive Order 12988.

G. Paperwork Reduction Act

The provisions of the Paperwork Reduction Act of 1995, Public Law 104–13, 44 U.S.C. chapter 35, and its implementing regulations, 5 CFR part 1320, do not apply to this interim rule because there are no new or revised recordkeeping or reporting requirements.

H. Congressional Review Act

This action pertains to agency management and personnel and, accordingly, is not a ''rule'' as that term is used by the Congressional Review Act (CRA) (Subtitle E of the Small Business Regulatory Enforcement Fairness Act (SBREFA)), 5 U.S.C. 804(3). Therefore, the reports to Congress and the Government Accountability Office specified by 5 U.S.C. 801 are not required.

List of Subjects in 8 CFR Part 1003

Administrative practice and procedure, Aliens, Immigration, Legal services, Organization and functions (Government agencies).

Accordingly, for the reasons stated in the preamble, the Attorney General amends part 1003 of chapter V of title 8 of the Code of Federal Regulations as follows:

PART 1003—EXECUTIVE OFFICE FOR IMMIGRATION REVIEW

■ 1. The authority citation for part 1003 continues to read as follows:

Authority: 5 U.S.C. 301; 6 U.S.C. 521; 8 U.S.C. 1101, 1103, 1154, 1155, 1158, 1182, 1226, 1229, 1229a, 1229b, 1229c, 1231, 1254a, 1255, 1324d, 1330, 1361, 1362; 28 U.S.C. 509, 510, 1746; sec. 2 Reorg. Plan No. 2 of 1950; 3 CFR, 1949–1953 Comp., p. 1002; section 203 of Pub. L. 105–100, 111 Stat. 2196–200; sections 1506 and 1510 of Pub. L. 106–386, 114 Stat. 1527–29, 1531–32; section 1505 of Pub. L. 106–554, 114 Stat. 2763A–326 to –328.

■ 2. Revise § 1003.10 by adding a new paragraph (e), to read as follows:

§ 1003.10 Immigration judges.

* * * * *

(e) *Temporary immigration judges.* (1) *Designation.* The Director is authorized to designate or select temporary immigration judges as provided in this paragraph (e).

(i) The Director may designate or select, with the approval of the Attorney General, former Board members, former immigration judges, administrative law judges employed within or retired from EOIR, and administrative law judges from other Executive Branch agencies to serve as temporary immigration judges for renewable terms not to exceed six months. Administrative law judges from other Executive Branch agencies must have the consent of their agencies to be designated as temporary immigration judges.

(ii) In addition, the Director may designate, with the approval of the Attorney General, Department of Justice attorneys with at least 10 years of legal experience in the field of immigration law to serve as temporary immigration judges for renewable terms not to exceed six months.

(2) *Authority.* A temporary immigration judge shall have the authority of an immigration judge to adjudicate assigned cases and administer immigration court matters, as provided in the immigration laws and regulations, subject to paragraph (e)(3) of this section.

(3) *Assignment of temporary immigration judges.* The Chief Immigration Judge is responsible for the overall oversight and management of the utilization of temporary immigration judges and for evaluating the results of the process. The Chief Immigration Judge shall ensure that each temporary immigration judge has received a suitable level of training to enable the temporary immigration judge to carry out the duties assigned.

Dated: July 8, 2014.

James M. Cole,

Deputy Attorney General.

[FR Doc. 2014–16279 Filed 7–10–14; 8:45 am]

BILLING CODE 4410–30–P

DEPARTMENT OF TRANSPORTATION

Federal Aviation Administration

14 CFR Part 39

[Docket No. FAA–2013–0876; Directorate Identifier 2013–NE–27–AD; Amendment 39–17895; AD 2014–14–01]

RIN 2120–AA64

Airworthiness Directives; Rolls-Royce plc Turbofan Engines

AGENCY: Federal Aviation Administration (FAA), DOT.

ACTION: Final rule.

SUMMARY: We are adopting a new airworthiness directive (AD) for certain Rolls-Royce plc (RR) RB211 Trent 768–60, 772–60, and 772B–60 turbofan engines. This AD requires modification of the engine by removing an electronic engine control (EEC) incorporating EEC software standard A14 or earlier and installing an EEC eligible for installation. This AD was prompted by an uncontained multiple turbine blade failure on an RR RB211 Trent 772B turbofan engine. We are issuing this AD to prevent failure of the intermediate-pressure (IP) turbine disk drive arm or burst of the high-pressure turbine disk, which could lead to uncontained engine failure and damage to the airplane.

DATES: This AD becomes effective August 15, 2014.

ADDRESSES: For service information identified in this AD, contact Rolls-Royce plc, Corporate Communications, P.O. Box 31, Derby, England, DE248BJ; phone: 011–44–1332–242424; fax: 011–44–1332–249936; email: *http://www.rolls-royce.com/contact/civil_team.jsp;* or Web site: *https://www.aeromanager.com.* You may view this service information at the FAA, Engine & Propeller Directorate, 12 New England Executive Park, Burlington, MA. For information on the availability of this material at the FAA, call 781–238–7125.

Examining the AD Docket

You may examine the AD docket on the Internet at *http://www.regulations.gov* by searching for and locating Docket No. FAA–2013–0876; or in person at the Docket Management Facility between 9 a.m. and 5 p.m., Monday through Friday, except Federal holidays. The AD docket contains this AD, the mandatory continuing airworthiness information (MCAI), the regulatory evaluation, any comments received, and other information. The address for the Docket Office (phone: 800–647–5527) is

Document Management Facility, U.S. Department of Transportation, Docket Operations, M–30, West Building Ground Floor, Room W12–140, 1200 New Jersey Avenue SE., Washington, DC 20590.

FOR FURTHER INFORMATION CONTACT:

Kenneth Steeves, Aerospace Engineer, Engine Certification Office, FAA, Engine & Propeller Directorate, 12 New England Executive Park, Burlington, MA 01803; phone: (781) 238–7765; fax: (781) 238–7199; email: *Kenneth.Steeves@faa.gov.*

SUPPLEMENTARY INFORMATION:

Discussion

We issued a notice of proposed rulemaking (NPRM) to amend 14 CFR part 39 by adding an AD that would apply to the specified products. The NPRM was published in the **Federal Register** on March 3, 2014 (79 FR 11722). The NPRM proposed to correct an unsafe condition for the specified products. The MCAI states:

> An operator of an A330 aeroplane fitted with RR Trent 772B engines experienced an engine uncontained multiple turbine blade failure. Investigation results showed that High-Pressure/Intermediate-Pressure (HP/IP) oil vent tubes may be affected by carbon deposit and may also be damaged by their outer heat shields, which in this case led to combustion inside the tube. The consequent chain of events resulted in an engine internal fire which caused the failure of the IP turbine disc drive arm.
>
> This condition, if not corrected, could lead to uncontained multiple turbine blade failures or an HP/IP turbine disc burst, possibly resulting in damage to, and reduced control of, the aeroplane.

Comments

We gave the public the opportunity to participate in developing this AD. We considered the comments received.

Request To Modify Description of Failure Mode

RR requested that we define the failure mode as IP turbine disc drive arm failure and multiple IP turbine blade release to be consistent with descriptions in the RR service bulletin and the European Aviation Safety Agency (EASA) AD.

We disagree. EASA AD 2013–0190, dated August 20, 2013, states that the failure mode is multiple turbine blade failures or HP/IP turbine disc burst. We did not change this AD.

Request That FAA Require the Same Compliance Date as the EASA AD

RR requested that we modify the compliance date to be consistent with the compliance date required in EASA AD 2013–0190, dated August 20, 2013.

We disagree. EASA AD 2013–0190, dated August 20, 2013 required compliance by December 31, 2018. We proposed compliance at next shop visit or December 31, 2018, whichever comes first, to achieve more timely mitigation of the unsafe condition. We did not change this AD.

Conclusion

We reviewed the available data, including the comments received, and determined that air safety and the public interest require adopting the AD as proposed.

Costs of Compliance

We estimate that this AD affects about 72 engines installed on airplanes of U.S. registry. We also estimate that it will take about 1 hour per engine to comply with this AD. The average labor rate is $85 per hour. There are no required parts. Based on these figures, we estimate the cost of this AD on U.S. operators to be $6,120.

Authority for This Rulemaking

Title 49 of the United States Code specifies the FAA's authority to issue rules on aviation safety. Subtitle I, section 106, describes the authority of the FAA Administrator. ''Subtitle VII: Aviation Programs,'' describes in more detail the scope of the Agency's authority.

We are issuing this rulemaking under the authority described in ''Subtitle VII, Part A, Subpart III, Section 44701: General requirements.'' Under that section, Congress charges the FAA with promoting safe flight of civil aircraft in air commerce by prescribing regulations for practices, methods, and procedures the Administrator finds necessary for safety in air commerce. This regulation is within the scope of that authority because it addresses an unsafe condition that is likely to exist or develop on products identified in this rulemaking action.

Regulatory Findings

We determined that this AD will not have federalism implications under Executive Order 13132. This AD will not have a substantial direct effect on the States, on the relationship between the national government and the States, or on the distribution of power and responsibilities among the various levels of government.

For the reasons discussed above, I certify this AD:

(1) Is not a ''significant regulatory action'' under Executive Order 12866,

(2) Is not a ''significant rule'' under the DOT Regulatory Policies and Procedures (44 FR 11034, February 26, 1979),

(3) Will not affect intrastate aviation in Alaska to the extent that it justifies making a regulatory distinction, and

(4) Will not have a significant economic impact, positive or negative, on a substantial number of small entities under the criteria of the Regulatory Flexibility Act.

List of Subjects in 14 CFR Part 39

Air transportation, Aircraft, Aviation safety, Incorporation by reference, Safety.

Adoption of the Amendment

Accordingly, under the authority delegated to me by the Administrator, the FAA amends 14 CFR part 39 as follows:

PART 39—AIRWORTHINESS DIRECTIVES

■ 1. The authority citation for part 39 continues to read as follows:

Authority: 49 U.S.C. 106(g), 40113, 44701.

§ 39.13 [Amended]

■ 2. The FAA amends § 39.13 by adding the following new airworthiness directive (AD):

2014–14–01 Rolls-Royce plc: Amendment 39–17895; Docket No. FAA–2013–0876; Directorate Identifier 2013–NE–27–AD.

(a) Effective Date

This AD becomes effective August 15, 2014.

(b) Affected ADs

None.

(c) Applicability

This AD applies to all Rolls-Royce plc (RR) RB211 Trent 768–60, 772–60, and 772B–60 turbofan engines prior to engine serial number 42066.

(d) Reason

This AD was prompted by an uncontained multiple turbine blade failure on an RR RB211 Trent 772B turbofan engine. We are issuing this AD to prevent failure of the intermediate-pressure turbine disc drive arm or burst of the high-pressure turbine disk, which could lead to uncontained engine failure and damage to the airplane.

(e) Actions and Compliance

After the effective date of this AD, at the next engine shop visit or by December 31, 2018, whichever occurs first, modify the engine by removing any electronic engine control (EEC) that incorporates EEC software standard A14 or earlier and installing an EEC eligible for installation.

(f) Installation Prohibition

After modification of an engine as required by paragraph (e) of this AD, do not install an EEC with software standard A14 or earlier into that engine.

(g) Definitions

(1) For the purpose of this AD, an ''engine shop visit'' is the induction of an engine into the shop for maintenance involving the separation of pairs of major mating engine flanges, except that the separation of engine flanges solely for the purposes of transportation without subsequent engine maintenance does not constitute an engine shop visit.

(2) For the purpose of this AD, an EEC ''eligible for installation'' is any EEC that does not contain software standard A14 or earlier.

(h) Credit for Previous Actions

If before the effective date of this AD you removed from an engine any EEC that had EEC software standard A14 or earlier and your engine no longer has an EEC with software standard A14 or earlier, you have met the requirements of this AD.

(i) Alternative Methods of Compliance (AMOCs)

The Manager, Engine Certification Office, FAA, may approve AMOCs to this AD. Use the procedures found in 14 CFR 39.19 to make your request.

(j) Related Information

(1) For more information about this AD, contact Kenneth Steeves, Aerospace Engineer, Engine Certification Office, FAA, Engine & Propeller Directorate, 12 New England Executive Park, Burlington, MA 01803; phone: (781) 238–7765; fax: (781) 238–7199; email: *Kenneth.Steeves@faa.gov.*

(2) Refer to MCAI European Aviation Safety Agency AD 2013–0190, dated August 20, 2013, for more information. You may examine the MCAI in the AD docket on the Internet at *http://www.regulations.gov/#!docketDetail;D=FAA-2013-0876.*

(3) RR Alert Service Bulletin No. RB.211–73–AG829, dated April 18, 2012, which is not incorporated by reference in this AD, can be obtained from Rolls-Royce plc, using the contact information in paragraph (j)(4) of this AD.

(4) For service information identified in this AD, contact Rolls-Royce plc, Corporate Communications, P.O. Box 31, Derby, England, DE248BJ; phone: 011–44–1332–242424; fax: 011–44–1332–249936; email: *http://www.rolls-royce.com/contact/civil_team.jsp;* or Web site: *https://www.aeromanager.com.*

(5) You may view this service information at the FAA, Engine & Propeller Directorate, 12 New England Executive Park, Burlington, MA. For information on the availability of this material at the FAA, call 781–238–7125.

(k) Material Incorporated by Reference

None.

Issued in Burlington, Massachusetts, on June 30, 2014.

Colleen M. D'Alessandro,

Assistant Directorate Manager, Engine & Propeller Directorate, Aircraft Certification Service.

[FR Doc. 2014–16184 Filed 7–10–14; 8:45 am]

BILLING CODE 4910–13–P

DEPARTMENT OF TRANSPORTATION

Federal Aviation Administration

14 CFR Part 39

[Docket No. FAA–2013–1059; Directorate Identifier 2013–NE–36–AD; Amendment 39–17896; AD 2014–14–02]

RIN 2120–AA64

Airworthiness Directives; Pratt & Whitney Canada Corp. Turboprop Engines

AGENCY: Federal Aviation Administration (FAA), DOT.

ACTION: Final rule.

SUMMARY: We are adopting a new airworthiness directive (AD) for certain Pratt & Whitney Canada Corp. (P&WC) PW120, PW121, PW121A, PW124B, PW127, PW127E, PW127F, PW127G, and PW127M turboprop engines. This AD requires removal of the O-ring seal from the fuel manifold fitting. This AD was prompted by reports of fuel leaks at the interface between the fuel manifold and the fuel nozzle that resulted in engine fire. We are issuing this AD to prevent in-flight fuel leakage, which could lead to engine fire, damage to the engine, and damage to the airplane.

DATES: This AD becomes effective August 15, 2014.

ADDRESSES: For service information identified in this AD, contact Pratt & Whitney Canada Corp., 1000 Marie-Victorin, Longueuil, Quebec, Canada, J4G 1A1; phone: 800–268–8000; fax: 450–647–2888; Web site: *www.pwc.ca.* You may view this service information at the FAA, Engine & Propeller Directorate, 12 New England Executive Park, Burlington, MA. For information on the availability of this material at the FAA, call 781–238–7125.

Examining the AD Docket

You may examine the AD docket on the Internet at *http://www.regulations.gov* by searching for and locating Docket No. FAA–2013–1059; or in person at the Docket Management Facility between 9 a.m. and 5 p.m., Monday through Friday, except Federal holidays. The AD docket contains this AD, the mandatory continuing airworthiness information (MCAI), the regulatory evaluation, any comments received, and other information. The address for the Docket Office (phone: 800–647–5527) is Document Management Facility, U.S. Department of Transportation, Docket Operations, M–30, West Building Ground Floor, Room W12–140, 1200 New Jersey Avenue SE., Washington, DC 20590.

FOR FURTHER INFORMATION CONTACT: Kevin Dickert, Aerospace Engineer, Engine Certification Office, FAA, Engine & Propeller Directorate, 12 New England Executive Park, Burlington, MA 01803; phone: 781–238–7117; fax: 781–238–7199; email: *kevin.dickert@faa.gov.*

SUPPLEMENTARY INFORMATION:

Discussion

We issued a notice of proposed rulemaking (NPRM) to amend 14 CFR part 39 by adding an AD that would apply to the specified products. The NPRM was published in the **Federal Register** on March 21, 2014 (79 FR 15707). The NPRM proposed to correct an unsafe condition for the specified products. The MCAI states:

> There have been reported incidences of fuel leaks at the interface between the flexible fuel manifold and the fuel nozzle. On occasion, these events resulted in an engine fire on PW100 series engine installations. The data indicates that nearly all of the subject manifold fuel leaks were caused by inadequate B-nut torque application during installation, after maintenance work was performed on the fuel nozzle/manifold.
>
> Sealing of the fitting connections between the fuel manifolds and the fuel nozzle adapters is achieved through conical metal-to-metal surface seating. An additional O-ring seal on the fitting was installed to arrest any fuel leak past the conical sealing surfaces. In-service experience has indicated that leakage past the sealing surfaces, as a result of improper torquing during installation of the manifold, may not be immediately evident until the failure of the O-ring seal allows the fuel to leak into the nacelle area.

Comments

We gave the public the opportunity to participate in developing this AD. We considered the comment received.

Request To Mandate Incorporation of Service Bulletins

UTair Aviation JSC requested that we mandate incorporation of P&WC Service Bulletins (SBs) PW100–72–21841, Revision No. 1, dated November 29, 2013; and PW100–72–21848, Revision No. 1, dated November 15, 2013, in the AD. The commenter suggested that incorporation by reference of these SBs would improve safety compared to the compliance proposed in the NPRM (79 FR 15707, March 21, 2014).

We disagree. We note that prior to implementation of these SBs, an operator would need to remove the affected O-ring seals, which would fulfill the requirements of this AD. We do not find that requiring accomplishing these service bulletins through incorporation by reference in this AD is necessary. We did not change this AD.

Conclusion

We reviewed the available data, including the comment received, and determined that air safety and the public interest require adopting the AD as proposed.

Costs of Compliance

We estimate that this AD affects about 150 engines installed on airplanes of U.S. registry. We also estimate that it would take about 2.5 hours per engine to perform the inspection or replacement required by this AD. The average labor rate is $85 per hour. Based on these figures, we estimate the cost of this AD on U.S. operators to be $31,875.

Authority for This Rulemaking

Title 49 of the United States Code specifies the FAA's authority to issue rules on aviation safety. Subtitle I, section 106, describes the authority of the FAA Administrator. ''Subtitle VII: Aviation Programs,'' describes in more detail the scope of the Agency's authority.

We are issuing this rulemaking under the authority described in ''Subtitle VII, Part A, Subpart III, Section 44701: General requirements.'' Under that section, Congress charges the FAA with promoting safe flight of civil aircraft in air commerce by prescribing regulations for practices, methods, and procedures the Administrator finds necessary for safety in air commerce. This regulation is within the scope of that authority because it addresses an unsafe condition that is likely to exist or develop on products identified in this rulemaking action.

Regulatory Findings

We determined that this AD will not have federalism implications under Executive Order 13132. This AD will not have a substantial direct effect on the States, on the relationship between the national government and the States, or on the distribution of power and responsibilities among the various levels of government.

For the reasons discussed above, I certify this AD:

(1) Is not a ''significant regulatory action'' under Executive Order 12866,

(2) Is not a ''significant rule'' under the DOT Regulatory Policies and Procedures (44 FR 11034, February 26, 1979),

(3) Will not affect intrastate aviation in Alaska to the extent that it justifies making a regulatory distinction, and

(4) Will not have a significant economic impact, positive or negative, on a substantial number of small entities under the criteria of the Regulatory Flexibility Act.

List of Subjects in 14 CFR Part 39

Air transportation, Aircraft, Aviation safety, Incorporation by reference, Safety.

Adoption of the Amendment

Accordingly, under the authority delegated to me by the Administrator, the FAA amends 14 CFR part 39 as follows:

PART 39—AIRWORTHINESS DIRECTIVES

■ 1. The authority citation for part 39 continues to read as follows:

Authority: 49 U.S.C. 106(g), 40113, 44701.

§ 39.13 [Amended]

■ 2. The FAA amends § 39.13 by adding the following new airworthiness directive (AD):

2014–14–02 Pratt & Whitney Canada Corp.: Amendment 39–17896; Docket No. FAA–2013–1059; Directorate Identifier 2013–NE–36–AD.

(a) Effective Date

This AD becomes effective August 15, 2014.

(b) Affected ADs

None.

(c) Applicability

This AD applies to Pratt & Whitney Canada Corp. (P&WC) PW120, PW121, and PW121A turboprop engines with Post SB21610 configuration; PW124B, PW127, PW127E, and PW127F turboprop engines with either Post SB21607 or Post SB21705 configuration, or both; and PW127G and PW127M turboprop engines.

(d) Reason

This AD was prompted by reports of fuel leaks at the interface between the fuel manifold and the fuel nozzle that resulted in engine fire. We are issuing this AD to prevent in-flight fuel leakage, which could lead to engine fire, damage to the engine, and damage to the airplane.

(e) Actions and Compliance

Unless already done, during the next opportunity when the affected subassembly is accessible, but no later than 18 months after the effective date of this AD, remove the O-ring seal from the fuel manifold fitting.

(f) Alternative Methods of Compliance (AMOCs)

The Manager, Engine Certification Office, FAA, may approve AMOCs to this AD. Use the procedures found in 14 CFR 39.19 to make your request.

(g) Related Information

(1) For more information about this AD, contact Kevin Dickert, Aerospace Engineer, Engine Certification Office, FAA, Engine & Propeller Directorate, 12 New England Executive Park, Burlington, MA 01803; phone: (781) 238–7117; fax: (781) 238–7199; email: *kevin.dickert@faa.gov.*

(2) Refer to MCAI Transport Canada AD CF–2013–29, dated October 4, 2013, for related information. You may examine the MCAI in the AD docket on the Internet at *http://www.regulations.gov* by searching for and locating it in Docket No. FAA–2013–1059.

(3) P&WC Service Bulletin PW100–72–21803, Revision No. 4, dated February 8, 2012, which is not incorporated by reference in this AD, can be obtained from Pratt & Whitney Canada, using the contact information in paragraph (g)(4) of this AD.

(4) For service information identified in this AD, contact Pratt & Whitney Canada Corp., 1000 Marie-Victorin Blvd., Longueuil, Quebec, Canada, J4G 1A1; phone: 800–268–8000; fax: 450–647–2888; Web site: *www.pwc.ca.*

(5) You may view this service information at the FAA, Engine & Propeller Directorate, 12 New England Executive Park, Burlington, MA. For information on the availability of this material at the FAA, call 781–238–7125.

(h) Material Incorporated by Reference

None.

Issued in Burlington, Massachusetts, on June 30, 2014.

Colleen M. D'Alessandro,

Assistant Directorate Manager, Engine & Propeller Directorate, Aircraft Certification Service.

[FR Doc. 2014–16187 Filed 7–10–14; 8:45 am]

BILLING CODE 4910–13–P

DEPARTMENT OF TRANSPORTATION

Federal Aviation Administration

14 CFR Part 39

[Docket No. FAA–2013–0939; Directorate Identifier 2013–CE–043–AD; Amendment 39–17881; AD 2013–22–23 R1]

RIN 2120–AA64

Airworthiness Directives; AERMACCHI S.p.A. Airplanes

AGENCY: Federal Aviation Administration (FAA), DOT.

ACTION: Final rule; request for comments.

SUMMARY: We are rescinding Airworthiness Directive (AD) 2013–22–23 for AERMACCHI S.p.A. Models F.260, F.260B, F.260C, F.260D, F.260E, F.260F, S.208, and S.208A airplanes equipped with a Lycoming O–540, IO–540, or AEIO–540 (depending on the airplane model) wide cylinder flange engine with a front crankcase mounted propeller governor. AD 2013–22–23 resulted from mandatory continuing airworthiness information (MCAI) issued by the aviation authority of another country to identify and correct an unsafe condition on an aviation product. We issued the AD to detect and

correct improper position of the set screw, which could lead to complete loss of engine oil pressure and result in emergency landing. Since we issued AD 2013–22–23, we have determined the unsafe condition does not exist specific to the airplane design features.

DATES: This AD is effective July 11, 2014. We must receive comments on this AD by August 25, 2014.

ADDRESSES: You may send comments, using the procedures found in 14 CFR 11.43 and 11.45, by any of the following methods:

- *Federal eRulemaking Portal:* Go to *http://www.regulations.gov.* Follow the instructions for submitting comments.
- *Fax:* 202–493–2251.
- *Mail:* U.S. Department of Transportation, Docket Operations, M–30, West Building Ground Floor, Room W12–140, 1200 New Jersey Avenue SE., Washington, DC 20590.
- *Hand Delivery:* U.S. Department of Transportation, Docket Operations, M–30, West Building Ground Floor, Room W12–140, 1200 New Jersey Avenue SE., Washington, DC 20590, between 9 a.m. and 5 p.m., Monday through Friday, except Federal holidays.

Examining the AD Docket

You may examine the AD docket on the Internet at *http://www.regulations.gov* by searching for and locating Docket No. FAA–2013–0939; or in person at the Docket Management Facility between 9 a.m. and 5 p.m., Monday through Friday, except Federal holidays. The AD docket contains this AD, the regulatory evaluation, any comments received, and other information. The street address for the Docket Office (phone: 800–647–5527) is in the **ADDRESSES** section. Comments will be available in the AD docket shortly after receipt.

FOR FURTHER INFORMATION CONTACT: Mike Kiesov, Aerospace Engineer, FAA, Small Airplane Directorate, 901 Locust, Room 301, Kansas City, Missouri 64106; telephone: (816) 329–4144; fax: (816) 329–4090; email: *mike.kiesov@faa.gov.*

SUPPLEMENTARY INFORMATION:

Discussion

On October 31, 2013, we issued AD 2013–22–23, Amendment 39–17655 (78 FR 68357; November 14, 2013). That AD required actions intended to address an unsafe condition on AERMACCHI S.p.A. Models F.260, F.260B, F.260C, F.260D, F.260E, F.260F, S.208, and S.208A airplanes equipped with a Lycoming O–540, IO–540, or AEIO–540 (depending on the airplane configuration) wide cylinder flange engine with a front crankcase mounted propeller.

AD 2013–22–23 (78 FR 68357; November 14, 2013) was based on mandatory continuing airworthiness action (MCAA) by the State of Design of these products. The European Aviation Safety Agency (EASA), which is the Technical Agent for the Member States of the European Community, has issued EASA AD No.: 2012–0228R1, dated November 13, 2012, to address the above situation. You may examine the MCAI on the Internet at *http://www.regulations.gov* by searching for and locating Docket No. FAA–2013–0939.

Since we issued AD 2013–22–23 (78 FR 68357; November 14, 2013), we determined the unsafe condition does not exist specific to the airplane design features. We will evaluate this condition at the engine level, and we may take rulemaking action in the future.

FAA's Determination

We are issuing this AD because we evaluated all the relevant information and determined the unsafe condition described previously is specific to the engine design feature rather than the specific airplane design feature. We will evaluate this condition further and may take rulemaking action in the future.

AD Requirements

This AD rescinds AD 2013–22–23, Amendment 39–17655 (78 FR 68357; November 14, 2013).

FAA's Determination of the Effective Date

Since we issued AD 2013–22–23 (78 FR 68357; November 14, 2013), we determined the unsafe condition does not exist specific to the airplane design features. We will evaluate this condition at the engine level, and we may take rulemaking action in the future. Therefore, we find that notice and opportunity to comment prior to adoption of this rule are unnecessary and that good cause exists for making this amendment effective in less than 30 days.

Comments Invited

Although this is a final rule that was not preceded by notice and an opportunity for public comment, we invite you to send any written data, views, or arguments about this AD. Send your comments to an address listed under the **ADDRESSES** section. Include the docket number FAA–2013–0939 and Directorate Identifier 2013–CE- 043–AD at the beginning of your comments. We specifically invite comments on the overall regulatory, economic, environmental, and energy aspects of this AD. We will consider all comments received by the closing date and may amend this AD because of those comments.

We will post all comments we receive, without change, to *http://www.regulations.gov,* including any personal information you provide. We will also post a report summarizing each substantive verbal contact we receive about this AD.

Authority for This Rulemaking

Title 49 of the United States Code specifies the FAA's authority to issue rules on aviation safety. Subtitle I, section 106, describes the authority of the FAA Administrator. ''Subtitle VII: Aviation Programs'' describes in more detail the scope of the Agency's authority.

We are issuing this rulemaking under the authority described in Subtitle VII, Part A, Subpart III, Section 44701: ''General requirements.'' Under that section, Congress charges the FAA with promoting safe flight of civil aircraft in air commerce by prescribing regulations for practices, methods, and procedures the Administrator finds necessary for safety in air commerce. This regulation is within the scope of that authority because it addresses an unsafe condition that is likely to exist or develop on products identified in this rulemaking action.

Regulatory Findings

This AD will not have federalism implications under Executive Order 13132. This AD will not have a substantial direct effect on the States, on the relationship between the national government and the States, or on the distribution of power and responsibilities among the various levels of government.

For the reasons discussed above, I certify that this AD:

(1) Is not a ''significant regulatory action'' under Executive Order 12866,

(2) Is not a ''significant rule'' under DOT Regulatory Policies and Procedures (44 FR 11034, February 26, 1979),

(3) Will not affect intrastate aviation in Alaska, and

(4) Will not have a significant economic impact, positive or negative, on a substantial number of small entities under the criteria of the Regulatory Flexibility Act.

List of Subjects in 14 CFR Part 39

Air transportation, Aircraft, Aviation safety, Incorporation by reference, Safety.

Adoption of the Amendment

Accordingly, under the authority delegated to me by the Administrator, the FAA amends 14 CFR part 39 as follows:

PART 39—AIRWORTHINESS DIRECTIVES

■ 1. The authority citation for part 39 continues to read as follows:

Authority: 49 U.S.C. 106(g), 40113, 44701.

§ 39.13 [Amended]

■ 2. The FAA amends § 39.13 by removing Airworthiness Directive (AD) 2013–22–23, Amendment 39–17655 (78 FR 68357; November 14, 2013) and adding the following new AD:

2013–22–23 R1 AERMACCHI S.p.A.: Amendment 39–17881; Docket No. FAA–2013–0939; Directorate Identifier 2013–CE–043–AD.

(a) Effective Date

This AD is effective July 11, 2014.

(b) Affected ADs

This AD rescinds AD 2013–22–23, Amendment 39–17655 (78 FR 68357; November 14, 2013).

(c) Applicability

This AD applies to the following AERMACCHI S.p.A. airplanes that are certificated in any category:

(1) Models F.260, F.260B, F.260C, F.260D, F.260E, and F.260F airplanes, all serial numbers, that are equipped with either a Lycoming O–540, IO–540, or AEIO–540 wide cylinder flange engine (identified by the suffix ''A'' or ''E'' in the serial number) with a front crankcase mounted propeller governor; and

(2) Models S.208 and S.208A airplanes, all serial numbers, that are equipped with a Lycoming O–540 wide cylinder flange engine (identified by the suffix ''A'' or ''E'' in the serial number) with a front crankcase mounted propeller governor.

(d) Subject

Joint Aircraft System Component (JASC)/ Air Transport Association (ATA) of America Code 71: Powerplant.

Issued in Kansas City, Missouri, on June 19, 2014.

Timothy Smyth,

Acting Manager, Small Airplane Directorate, Aircraft Certification Service.

[FR Doc. 2014–15528 Filed 7–10–14; 8:45 am]

BILLING CODE 4910–13–P

DEPARTMENT OF TRANSPORTATION

Federal Aviation Administration

14 CFR Part 39

[Docket No. FAA–2014–0386; Directorate Identifier 2014–NE–09–AD; Amendment 39–17897; AD 2014–12–52]

RIN 2120–AA64

Airworthiness Directives; Honeywell International Inc. (Type Certificate Previously Held by AlliedSignal Inc., Garrett Turbine Engine Company) Turbofan Engines

AGENCY: Federal Aviation Administration (FAA), DOT.

ACTION: Final rule; request for comments.

SUMMARY: We are superseding emergency airworthiness directive (AD) 2014–12–52 for all Honeywell International Inc. TFE731–4, –4R, –5AR, –5BR, –5R, –20R, –20AR, –20BR, –40, –40AR, –40R, –40BR, –50R, and –60 turbofan engines. Emergency AD 2014–12–52 was sent previously to all known U.S. owners and operators of these engines. AD 2014–12–52 required, before further flight, a review of the engine logbook maintenance records to determine if any affected engines are installed. AD 2014–12–52 also prohibited operation of an airplane with two or more affected engines that have 2nd stage low-pressure turbine (LPT2) blades with less than 250 operating hours since new. This AD retains the requirements of AD 2014–12–52 and clarifies the intent of the mandatory requirements. This AD was prompted by reports of LPT2 blade separations. We are issuing this AD to prevent LPT2 blade failure, multiple engine in-flight shutdowns, and damage to the airplane.

DATES: This AD is effective July 28, 2014.

We must receive comments on this AD by August 25, 2014.

ADDRESSES: You may send comments, using the procedures found in 14 CFR 11.43 and 11.45, by any of the following methods:

- *Federal eRulemaking Portal:* Go to *http://www.regulations.gov.* Follow the instructions for submitting comments.
- *Fax:* 202–493–2251.
- *Mail:* U.S. Department of Transportation, Docket Operations, M–30, West Building Ground Floor, Room W12–140, 1200 New Jersey Avenue SE., Washington, DC 20590.
- *Hand Delivery:* Deliver to Mail address above between 9 a.m. and 5 p.m., Monday through Friday, except Federal holidays.

For service information identified in this AD, contact Honeywell International Inc., 111 S. 34th Street, Phoenix, AZ 85034–2802; phone: (800) 601–3099; Internet: *http://www.myaerospace.com.* You may view this service information at the FAA, Engine & Propeller Directorate, 12 New England Executive Park, Burlington, MA. For information on the availability of this material at the FAA, call (781) 238–7125.

Examining the AD Docket

You may examine the AD docket on the Internet at *http://www.regulations.gov* by searching for and locating Docket No. FAA–2014–0386; or in person at the Docket Operations Office between 9 a.m. and 5 p.m., Monday through Friday, except Federal holidays. The AD docket contains this AD, the regulatory evaluation, any comments received, and other information. The street address for the Docket Operations Office (phone: 800–647–5527) is in the **ADDRESSES** section. Comments will be available in the AD docket shortly after receipt.

FOR FURTHER INFORMATION CONTACT: Joseph Costa, Aerospace Engineer, Los Angeles Aircraft Certification Office, FAA, Transport Airplane Directorate, 3960 Paramount Blvd., Lakewood, CA 90712–4137; phone: 562–627–5246; fax: 562–627–5210; email: *joseph.costa@faa.gov.*

SUPPLEMENTARY INFORMATION:

Discussion

On June 10, 2014, we issued Emergency AD 2014–12–52, which requires, before further flight, a review of the engine logbook maintenance records to determine if any affected engines are installed. Emergency AD 2014–12–52 also required for two-engine airplanes or for three-engine airplanes, that have two or more engines installed with LPT2 blades installed that have less than 250 operating hours since new, remove all affected engines before further flight. Emergency AD 2014–12–52 was sent previously to all known U.S. owners and operators of these TFE731–4, –4R, –5AR, –5BR, –5R, –20R, –20AR, –20BR, –40, –40AR, –40R, –40BR, –50R, and –60 turbofan engines. This action was prompted by reports of LPT2 blade separations. Analysis indicates the presence of casting anomalies at or near the root of the LPT2 blade. This condition, if not corrected, could result in LPT2 blade failure, multiple engine in-flight shutdowns, and damage to the airplane. We are superseding Emergency AD

2014–12–52 to clarify the intent of paragraphs (e) and (f) of this AD.

Relevant Service Information

We reviewed Honeywell Alert Service Bulletin (ASB) No. TFE731–72–A3792, dated June 5, 2014; ASB No. TFE731–72–A5242, dated June 5, 2014; and ASB No. TFE731–72–A5243, dated June 5, 2014. The service information describes procedures for identifying affected engines and follow-on actions.

FAA's Determination

We are issuing this AD because we evaluated all the relevant information and determined the unsafe condition described previously is likely to exist or develop in other products of the same type design.

AD Requirements

This AD requires, before further flight, a review of the engine logbook maintenance records to determine if any affected engines are installed. If any affected engines are installed, then this AD prohibits operation of an airplane with two or more affected engines that have LPT2 blades with less than 250 operating hours since new.

Differences Between This AD and the Service Information

Paragraphs (e)(2) and (e)(3) of this AD require that certain affected engines be removed before further flight. Honeywell ASB No. TFE731–72–A3792, dated June 5, 2014; ASB No. TFE731–72–A5242, dated June 5, 2014; and ASB No. TFE731–72–A5243, dated June 5, 2014, for airplanes having only one affected engine installed, require no action at this time and may continue operation.

Interim Action

We consider this AD to be an interim action. We anticipate that further AD action will follow.

FAA's Determination of the Effective Date

An unsafe condition exists that requires the immediate adoption of this AD. The FAA has found that the risk to the flying public justifies waiving notice and comment prior to adoption of this rule because of compliance requirement before further flight. Therefore, we find that notice and opportunity for prior public comment are impracticable and that good cause exists for making this amendment effective in less than 30 days.

Comments Invited

This AD is a final rule that involves requirements affecting flight safety and was not preceded by notice and an opportunity for public comment. However, we invite you to send any written data, views, or arguments about this AD. Send your comments to an address listed under the **ADDRESSES** section. Include ''Docket No. FAA–2014–0386; Directorate Identifier 2014–NE–09–AD'' at the beginning of your comments. We specifically invite comments on the overall regulatory, economic, environmental, and energy aspects of this AD. We will consider all comments received by the closing date and may amend this AD because of those comments.

We will post all comments we receive, without change, to *http://www.regulations.gov,* including any personal information you provide. We will also post a report summarizing each substantive verbal contact we receive about this AD.

Costs of Compliance

We estimate that this AD affects 50 engines installed on airplanes of U.S. registry. We also estimate that it will take about 18 hours per engine to comply with this AD. The average labor rate is $85 per hour. Required parts cost about $0 per engine. Based on these figures, we estimate the cost of this AD on U.S. operators to be $76,500.

Authority for This Rulemaking

Title 49 of the United States Code specifies the FAA's authority to issue rules on aviation safety. Subtitle I, section 106, describes the authority of the FAA Administrator. Subtitle VII: Aviation Programs describes in more detail the scope of the Agency's authority.

We are issuing this rulemaking under the authority described in Subtitle VII, Part A, Subpart III, Section 44701: ''General requirements.'' Under that section, Congress charges the FAA with promoting safe flight of civil aircraft in air commerce by prescribing regulations for practices, methods, and procedures the Administrator finds necessary for safety in air commerce. This regulation is within the scope of that authority because it addresses an unsafe condition that is likely to exist or develop on products identified in this rulemaking action.

Regulatory Findings

This AD will not have federalism implications under Executive Order 13132. This AD will not have a substantial direct effect on the States, on the relationship between the national government and the States, or on the distribution of power and responsibilities among the various levels of government.

For the reasons discussed above, I certify that this AD:

(1) Is not a ''significant regulatory action'' under Executive Order 12866,

(2) Is not a ''significant rule'' under DOT Regulatory Policies and Procedures (44 FR 11034, February 26, 1979),

(3) Will not affect intrastate aviation in Alaska to the extent that it justifies making a regulatory distinction, and

(4) Will not have a significant economic impact, positive or negative, on a substantial number of small entities under the criteria of the Regulatory Flexibility Act.

List of Subjects in 14 CFR Part 39

Air transportation, Aircraft, Aviation safety, Incorporation by reference, Safety.

Adoption of the Amendment

Accordingly, under the authority delegated to me by the Administrator, the FAA amends 14 CFR part 39 as follows:

PART 39—AIRWORTHINESS DIRECTIVES

■ 1. The authority citation for part 39 continues to read as follows:

Authority: 49 U.S.C. 106(g), 40113, 44701.

§ 39.13 [Amended]

■ 2. The FAA amends § 39.13 by adding the following new airworthiness directive (AD):

2014–12–52 Honeywell International Inc. (Type Certificate previously held by AlliedSignal Inc., Garrett Turbine Engine Company): Amendment 39–17897; Docket No. FAA–2014–0386; Directorate Identifier 2014–NE–09–AD.

(a) Effective Date

This AD is effective July 28, 2014.

(b) Affected ADs

This AD supersedes Emergency AD 2014–12–52, Directorate Identifier 2014–NE–09–AD, dated June 10, 2014.

(c) Applicability

This AD applies to all Honeywell International Inc. TFE731–4, –4R, –5AR, –5BR, –5R, –20R, –20AR, –20BR, –40, –40AR, –40R, –40BR, –50R, and –60 turbofan engines with 2nd stage low-pressure turbine (LPT2) blades, part number (P/N) 3075424–1, –2, or –3, installed.

(d) Unsafe Condition

This AD was prompted by reports of LPT2 blade separations. Analysis indicates the presence of casting anomalies at or near the root of the LPT2 blade. We are issuing this AD to prevent LPT2 blade failure, multiple engine in-flight shutdowns, and damage to the airplane.

(e) Compliance

Comply with this AD within the compliance times specified, unless already done.

(1) Before further flight, review engine logbook maintenance records to determine if any engine is installed that has LPT2 blade, P/N 3075424–1, –2, or –3, installed with less than 250 operating hours since new on the blade.

(2) For two-engine airplanes that have two engines with LPT2 blades installed that have less than 250 operating hours since new, remove all affected engines before further flight.

(3) For three-engine airplanes that have two or more engines with LPT2 blades installed that have less than 250 operating hours since new, remove all affected engines before further flight.

(4) After the effective date of this AD, do not install any engine that has installed in it LPT2 blades, P/N 3075424–1, –2, or –3, that have less than 250 operating hours since new.

(f) Special Flight Permit

Special flight permits are permitted for one over-land ferry flight to a maintenance facility where engines can be removed.

(g) Alternative Methods of Compliance (AMOCs)

The Manager, Los Angeles Aircraft Certification Office, FAA, may approve AMOCs for this AD. Use the procedures found in 14 CFR 39.19 to make your request.

(h) Related Information

(1) For more information about this AD, contact Joseph Costa, Aerospace Engineer, Los Angeles Aircraft Certification Office, FAA, Transport Airplane Directorate, 3960 Paramount Blvd., Lakewood, CA 90712–4137; phone: 562–627–5246; fax: 562–627–5210; email: *joseph.costa@faa.gov.*

(2) Honeywell International Alert Service Bulletin (ASB) No. TFE731–72–A3792, dated June 5, 2014; ASB No. TFE731–72–A5242, dated June 5, 2014; and ASB No. TFE731–72–A5243, dated June 5, 2014, which are not incorporated by reference in this AD, can be obtained from Honeywell International Inc., using the contact information in paragraph (h)(3) of this AD.

(3) For service information identified in this AD, contact Honeywell International Inc., 111 S. 34th Street, Phoenix, AZ 85034–2802; phone: 800–601–3099; Internet: *http://www.myaerospace.com.*

(4) You may view this service information at the FAA, Engine & Propeller Directorate, 12 New England Executive Park, Burlington, MA. For information on the availability of this material at the FAA, call 781–238–7125.

Issued in Burlington, Massachusetts, on July 7, 2014.

Ann C. Mollica,

Acting Assistant Directorate Manager, Engine & Propeller Directorate, Aircraft Certification Service.

[FR Doc. 2014–16244 Filed 7–10–14; 8:45 am]

BILLING CODE 4910–13–P

DEPARTMENT OF TRANSPORTATION

Federal Aviation Administration

14 CFR Part 97

[Docket No. 30964; Amdt. No. 3596]

Standard Instrument Approach Procedures, and Takeoff Minimums and Obstacle Departure Procedures; Miscellaneous Amendments

AGENCY: Federal Aviation Administration (FAA), DOT.

ACTION: Final rule.

SUMMARY: This rule amends, suspends, or revokes Standard Instrument Approach Procedures (SIAPs) and associated Takeoff Minimums and Obstacle Departure Procedures for operations at certain airports. These regulatory actions are needed because of the adoption of new or revised criteria, or because of changes occurring in the National Airspace System, such as the commissioning of new navigational facilities, adding new obstacles, or changing air traffic requirements. These changes are designed to provide safe and efficient use of the navigable airspace and to promote safe flight operations under instrument flight rules at the affected airports.

DATES: This rule is effective July 11, 2014. The compliance date for each SIAP, associated Takeoff Minimums, and ODP is specified in the amendatory provisions.

The incorporation by reference of certain publications listed in the regulations is approved by the Director of the Federal Register as of July 11, 2014.

ADDRESSES: Availability of matter incorporated by reference in the amendment is as follows:

For Examination—

1. FAA Rules Docket, FAA Headquarters Building, 800 Independence Avenue SW., Washington, DC 20591;

2. The FAA Regional Office of the region in which the affected airport is located;

3. The National Flight Procedures Office, 6500 South MacArthur Blvd., Oklahoma City, OK 73169 or,

4. The National Archives and Records Administration (NARA). For information on the availability of this material at NARA, call 202–741–6030, or go to: *http://www.archives.gov/federal_register/code_of_federal_regulations/ibr_locations.html.*

Availability—All SIAPs are available online free of charge. Visit *nfdc.faa.gov* to register. Additionally, individual SIAP and Takeoff Minimums and ODP copies may be obtained from:

1. FAA Public Inquiry Center (APA–200), FAA Headquarters Building, 800 Independence Avenue SW., Washington, DC 20591; or

2. The FAA Regional Office of the region in which the affected airport is located.

FOR FURTHER INFORMATION CONTACT: Richard A. Dunham III, Flight Procedure Standards Branch (AFS–420) Flight Technologies and Programs Division, Flight Standards Service, Federal Aviation Administration, Mike Monroney Aeronautical Center, 6500 South MacArthur Blvd., Oklahoma City, OK 73169 (Mail Address: P.O. Box 25082, Oklahoma City, OK 73125) telephone: (405) 954–4164.

SUPPLEMENTARY INFORMATION: This rule amends Title 14, Code of Federal Regulations, Part 97 (14 CFR part 97) by amending the referenced SIAPs. The complete regulatory description of each SIAP is listed on the appropriate FAA Form 8260, as modified by the National Flight Data Center (FDC)/Permanent Notice to Airmen (P–NOTAM), and is incorporated by reference in the amendment under 5 U.S.C. 552(a), 1 CFR part 51, and § 97.20 of Title 14 of the Code of Federal Regulations.

The large number of SIAPs, their complex nature, and the need for a special format make their verbatim publication in the **Federal Register** expensive and impractical. Further, airmen do not use the regulatory text of the SIAPs, but refer to their graphic depiction on charts printed by publishers of aeronautical materials. Thus, the advantages of incorporation by reference are realized and publication of the complete description of each SIAP contained in FAA form documents is unnecessary. This amendment provides the affected CFR sections and specifies the types of SIAP and the corresponding effective dates. This amendment also identifies the airport and its location, the procedure and the amendment number.

The Rule

This amendment to 14 CFR part 97 is effective upon publication of each separate SIAP as amended in the transmittal. For safety and timeliness of change considerations, this amendment incorporates only specific changes contained for each SIAP as modified by FDC/P–NOTAMs.

The SIAPs, as modified by FDC P–NOTAM, and contained in this amendment are based on the criteria contained in the U.S. Standard for Terminal Instrument Procedures

(TERPS). In developing these changes to SIAPs, the TERPS criteria were applied only to specific conditions existing at the affected airports. All SIAP amendments in this rule have been previously issued by the FAA in a FDC NOTAM as an emergency action of immediate flight safety relating directly to published aeronautical charts. The circumstances which created the need for all these SIAP amendments requires making them effective in less than 30 days.

Because of the close and immediate relationship between these SIAPs and safety in air commerce, I find that notice and public procedure before adopting these SIAPs are impracticable and contrary to the public interest and, where applicable, that good cause exists for making these SIAPs effective in less than 30 days.

Conclusion

The FAA has determined that this regulation only involves an established body of technical regulations for which frequent and routine amendments are necessary to keep them operationally current. It, therefore—(1) is not a ''significant regulatory action'' under Executive Order 12866; (2) is not a ''significant rule'' under DOT regulatory Policies and Procedures (44 FR 11034; February 26, 1979); and (3) does not warrant preparation of a regulatory evaluation as the anticipated impact is so minimal. For the same reason, the FAA certifies that this amendment will not have a significant economic impact on a substantial number of small entities under the criteria of the Regulatory Flexibility Act.

List of Subjects in 14 CFR Part 97

Air Traffic Control, Airports, Incorporation by reference, and Navigation (Air).

Issued in Washington, DC, on June 6, 2014.

John Duncan,

Director, Flight Standards Service.

Adoption of the Amendment

Accordingly, pursuant to the authority delegated to me, Title 14, Code of Federal regulations, Part 97, 14 CFR part 97, is amended by amending Standard Instrument Approach Procedures, effective at 0901 UTC on the dates specified, as follows:

PART 97—STANDARD INSTRUMENT APPROACH PROCEDURES

■ 1. The authority citation for part 97 continues to read as follows:

Authority: 49 U.S.C. 106(g), 40103, 40106, 40113, 40114, 40120, 44502, 44514, 44701, 44719, 44721–44722.

■ 2. Part 97 is amended to read as follows:

§§ 97.23, 97.25, 97.27, 97.29, 97.31, 97.33, 97.35 [Amended]

By amending: § 97.23 VOR, VOR/DME, VOR or TACAN, and VOR/DME or TACAN; § 97.25 LOC, LOC/DME, LDA, LDA/DME, SDF, SDF/DME; § 97.27 NDB, NDB/DME; § 97.29 ILS, ILS/DME, MLS, MLS/DME, MLS/RNAV; § 97.31 RADAR SIAPs; § 97.33 RNAV SIAPs; and § 97.35 COPTER SIAPs, Identified as follows:

* * * Effective Upon Publication

AIRAC date	State	City	Airport	FDC No.	FDC date	Subject
24-Jul-14	FL	Okeechobee	Okeechobee County	4/0003	05/22/14	RNAV (GPS) RWY 23, Amdt 2.
24-Jul-14	CO	Holyoke	Holyoke	4/0052	05/29/14	RNAV (GPS) RWY 14, Orig-C.
24-Jul-14	CO	Holyoke	Holyoke	4/0053	05/29/14	RNAV (GPS) RWY 32, Orig-B.
24-Jul-14	FL	Live Oak	Suwannee County	4/0056	06/02/14	RNAV (GPS) RWY 25, Orig-A.
24-Jul-14	CT	Oxford	Waterbury-Oxford	4/0238	05/28/14	ILS OR LOC RWY 36, Amdt 14.
24-Jul-14	CT	Oxford	Waterbury-Oxford	4/0243	05/28/14	RNAV (GPS) RWY 36, Amdt 2.
24-Jul-14	AK	Gustavus	Gustavus	4/0332	05/20/14	VOR/DME RWY 29, Amdt 2A.
24-Jul-14	AK	Gustavus	Gustavus	4/0333	05/20/14	RNAV (GPS) RWY 29, Amdt 2B.
24-Jul-14	AK	Kaltag	Kaltag	4/0474	06/03/14	RNAV (GPS) RWY 3, Orig-B.
24-Jul-14	AK	Kaltag	Kaltag	4/0481	06/03/14	RNAV (GPS) RWY 21, Amdt 1A.
24-Jul-14	WA	Everett	Snohomish County (Paine Fld).	4/0594	05/29/14	ILS OR LOC/DME Z RWY 16R, Orig.
24-Jul-14	CA	Davis	University	4/0868	05/19/14	RNAV (GPS) RWY 17, Orig-A.
24-Jul-14	MT	Helena	Helena Rgnl	4/0900	05/19/14	VOR/DME B, Amdt 7
24-Jul-14.	CO	Buena Vista	Central Colorado Rgnl	4/1128	06/03/14	RNAV (GPS) RWY 33, Orig.
24-Jul-14	FL	Apalachicola	Apalachicola Regional	4/1190	05/20/14	RNAV (GPS) RWY 36, Orig.
24-Jul-14	FL	Apalachicola	Apalachicola Regional	4/1191	05/20/14	RNAV (GPS) RWY 24, Amdt 1.
24-Jul-14	FL	Apalachicola	Apalachicola Regional	4/1192	05/20/14	RNAV (GPS) RWY 6, Amdt 1.
24-Jul-14	FL	Apalachicola	Apalachicola Regional	4/1193	05/20/14	NDB RWY 32, Amdt 2.
24-Jul-14	FL	Apalachicola	Apalachicola Regional	4/1194	05/20/14	NDB RWY 14, Amdt 2.
24-Jul-14	FL	Apalachicola	Apalachicola Regional	4/1195	05/20/14	RNAV (GPS) RWY 32, Amdt 2.
24-Jul-14	FL	Apalachicola	Apalachicola Regional	4/1196	05/20/14	Takeoff Minimums and Obstacle DP, Amdt 1.
24-Jul-14	FL	Apalachicola	Apalachicola Regional	4/1197	05/20/14	RNAV (GPS) RWY 14, Amdt 2.
24-Jul-14	FL	Apalachicola	Apalachicola Regional	4/1198	05/20/14	RNAV (GPS) RWY 18, Orig
24-Jul-14.	CA	Sacramento	Sacramento Executive	4/1368	05/19/14	VOR RWY 2, Amdt 10B.
24-Jul-14	CA	Fresno	Fresno Yosemite Intl	4/1388	05/30/14	RNAV (GPS) RWY 11R, Amdt 2.
24-Jul-14	CA	Fresno	Fresno Yosemite Intl	4/1389	05/30/14	ILS RWY 29R (CAT II & III), Amdt 38.
24-Jul-14	CA	Fresno	Fresno Yosemite Intl	4/1390	05/30/14	RNAV (GPS) RWY 11L, Amdt 1.
24-Jul-14	CA	Fresno	Fresno Yosemite Intl	4/1392	05/30/14	VOR/DME OR TACAN RWY 11L, Amdt 2.
24-Jul-14	CA	Fresno	Fresno Yosemite Intl	4/1404	05/30/14	VOR/DME OR TACAN RWY 29R, Amdt 2.
24-Jul-14	CA	Fresno	Fresno Yosemite Intl	4/1405	05/30/14	ILS RWY 29R (SA CAT I), Amdt 38.
24-Jul-14	CA	Fresno	Fresno Yosemite Intl	4/1407	05/30/14	RNAV (GPS) RWY 29L, Amdt 2.
24-Jul-14	CA	Fresno	Fresno Yosemite Intl	4/1408	05/30/14	RNAV (GPS) RWY 29R, Amdt 1.
24-Jul-14	GA	Greensboro	Greene County Rgnl	4/1423	06/04/14	RNAV (GPS) RWY 7, Amdt 1B.
24-Jul-14	TN	Memphis	Memphis Intl	4/1437	05/30/14	RNAV (RNP) Y RWY 18C, Orig-C.
24-Jul-14	TN	Memphis	Memphis Intl	4/1438	05/30/14	RNAV (GPS) RWY 27, Amdt 2A.

AIRAC date	State	City	Airport	FDC No.	FDC date	Subject
24-Jul-14	TN	Memphis	Memphis Intl	4/1439	05/30/14	ILS OR LOC RWY 27,Amdt 4A.
24-Jul-14	GA	Greensboro	Greene County Rgnl	4/1443	06/04/14	VOR/DME B, Amdt 2B.
24-Jul-14	CO	Montrose	Montrose Rgnl	4/1533	06/03/14	VOR/DME RWY 13, Amdt 9A.
24-Jul-14	CO	Montrose	Montrose Rgnl	4/1651	06/03/14	RNAV (GPS) Z RWY 17, Orig-A.
24-Jul-14	CO	Montrose	Montrose Rgnl	4/1690	06/03/14	RNAV (GPS) RWY 13, Orig-A.
24-Jul-14	MO	Kansas City	Charles B. Wheeler Downtown.	4/1931	05/30/14	Takeoff Minimums and Obstacle DP, Amdt 3A.
24-Jul-14	KY	Louisville	Bowman Field	4/2042	06/04/14	RNAV (GPS) RWY 24, Amdt 2.
24-Jul-14	CA	Burbank	Bob Hope	4/2184	05/28/14	GPS A, Orig-A.
24-Jul-14	CA	Burbank	Bob Hope	4/2189	05/28/14	ILS OR LOC Z RWY 8, Amdt 37.
24-Jul-14	CA	Burbank	Bob Hope	4/2190	05/28/14	RNAV (RNP) Z RWY 8, Amdt 1.
24-Jul-14	CA	Burbank	Bob Hope	4/2191	05/28/14	LOC Y RWY 8, Amdt 4.
24-Jul-14	CA	Burbank	Bob Hope	4/2192	05/28/14	VOR RWY 8, Amdt 11A.
24-Jul-14	CO	Montrose	Montrose Rgnl	4/2373	06/03/14	RNAV (GPS) Y RWY 17, Orig-A.
24-Jul-14	CO	Montrose	Montrose Rgnl	4/2376	06/03/14	RNAV (GPS) RWY 35, Orig-A.
24-Jul-14	AK	Nuiqsut	Nuiqsut	4/2457	06/03/14	RNAV (GPS) RWY 5, Amdt 1.
24-Jul-14	AK	Nuiqsut	Nuiqsut	4/2458	06/03/14	RNAV (GPS) RWY 23, Amdt 1A.
24-Jul-14	AK	Toksook Bay	Toksook Bay	4/2460	06/03/14	RNAV (GPS) RWY 34, Amdt 3.
24-Jul-14	AK	Talkeetna	Talkeetna	4/2467	06/02/14	NDB RWY 36, Amdt 3.
24-Jul-14	FL	Immokalee	Immokalee Rgnl	4/2485	05/28/14	VOR RWY 18, Amdt 6A.
24-Jul-14	FL	Immokalee	Immokalee Rgnl	4/2488	05/28/14	RNAV (GPS) RWY 18, Orig-A.
24-Jul-14	AK	White Mountain	White Mountain	4/2648	06/02/14	RNAV (GPS) RWY 33, Orig.
24-Jul-14	AK	White Mountain	White Mountain	4/2649	06/02/14	RNAV (GPS) RWY 15, Orig.
24-Jul-14	SC	Aiken	Aiken Muni	4/2735	06/04/14	ILS OR LOC/DME RWY 7, Orig-A.
24-Jul-14	MS	Yazoo City	Yazoo County	4/2744	06/02/14	RNAV (GPS) RWY 17, Orig.
24-Jul-14	MS	Yazoo City	Yazoo County	4/2745	06/02/14	RNAV (GPS) RWY 35, Orig.
24-Jul-14	OH	Piqua	Piqua Airport- Hartzell Field.	4/2747	05/22/14	VOR A, Amdt 13.
24-Jul-14	OH	Piqua	Piqua Airport- Hartzell Field.	4/2748	05/22/14	VOR RWY 26, Amdt 6A.
24-Jul-14	OH	Piqua	Piqua Airport- Hartzell Field.	4/2749	05/22/14	RNAV (GPS) RWY 26, Orig-A.
24-Jul-14	OH	Piqua	Piqua Airport- Hartzell Field.	4/2752	05/22/14	RNAV (GPS) RWY 8, Orig-A.
24-Jul-14	CA	Crescent City	Jack Mc Namara Field	4/2773	05/20/14	ILS OR LOC/DME RWY 11, Amdt 8A.
24-Jul-14	CA	Crescent City	Jack Mc Namara Field	4/2777	05/20/14	VOR/DME RWY 35, Amdt 11.
24-Jul-14	CA	Crescent City	Jack Mc Namara Field	4/2783	05/20/14	VOR/DME RWY 11, Amdt 13.
24-Jul-14	CA	Crescent City	Jack Mc Namara Field	4/2784	05/20/14	RNAV (GPS) RWY 11, Amdt 1.
24-Jul-14	CA	Crescent City	Jack Mc Namara Field	4/2785	05/20/14	VOR RWY 11, Amdt 11.
24-Jul-14	CA	Crescent City	Jack Mc Namara Field	4/2786	05/20/14	RNAV (GPS) RWY 35, Orig.
24-Jul-14	FL	Pensacola	Pensacola International	4/2824	06/04/14	RNAV (GPS) RWY 8, Amdt 2A.
24-Jul-14	FL	Pensacola	Pensacola International	4/2831	06/04/14	RNAV (GPS) RWY 35, Amdt 2A.
24-Jul-14	FL	Pensacola	Pensacola International	4/2832	06/04/14	NDB RWY 35, Amdt 17A.
24-Jul-14	FL	Pensacola	Pensacola International	4/2833	06/04/14	VOR RWY 8, Amdt 4A.
24-Jul-14	FL	Pensacola	Pensacola International	4/2854	06/04/14	RNAV (GPS) RWY 26, Amdt 2A.
24-Jul-14	FL	Pensacola	Pensacola International	4/2855	06/04/14	RNAV (GPS) RWY 17, Amdt 2B.
24-Jul-14	FL	Pensacola	Pensacola International	4/2856	06/04/14	ILS OR LOC RWY 17, Amdt 14A.
24-Jul-14	WA	Friday Harbor	Friday Harbor	4/2968	05/29/14	RNAV (GPS) RWY 34, Amdt 2.
24-Jul-14	AK	Middleton Island	Middleton Island	4/3158	05/28/14	VOR/DME RWY 20, Amdt 6A.
24-Jul-14	AK	Middleton Island	Middleton Island	4/3164	05/28/14	RNAV (GPS) RWY 20, Amdt 1A.
24-Jul-14	AK	Middleton Island	Middleton Island	4/3172	05/28/14	VOR RWY 2, Amdt 3A.
24-Jul-14	AK	Middleton Island	Middleton Island	4/3176	05/28/14	RNAV (GPS) RWY 2, Amdt 1A.
24-Jul-14	ID	Burley	Burley Muni	4/3248	05/19/14	VOR/DME B, Amdt 4B.
24-Jul-14	ID	Burley	Burley Muni	4/3249	05/19/14	VOR A, Amdt 4B.
24-Jul-14	ID	Burley	Burley Muni	4/3250	05/19/14	RNAV (GPS) RWY 20, Orig-A.
24-Jul-14	NC	Elizabeth City	Elizabeth City CG Air Station/Rgnl.	4/3261	05/30/14	RNAV (GPS) RWY 1, Orig-A.
24-Jul-14	AK	Fort Yukon	Fort Yukon	4/3352	06/02/14	RNAV (GPS) RWY 22, Amdt 1A.
24-Jul-14	AK	Fort Yukon	Fort Yukon	4/3353	06/02/14	VOR/DME OR TACAN RWY 22, Amdt 3.
24-Jul-14	AK	Fort Yukon	Fort Yukon	4/3360	06/02/14	RNAV (GPS) RWY 4, Amdt 1A.
24-Jul-14	CO	Fort Morgan	Fort Morgan Muni	4/3378	05/20/14	RNAV (GPS) RWY 14, Orig-A.
24-Jul-14	AZ	Show Low	Show Low Rgnl	4/3385	06/02/14	RNAV (GPS) RWY 24, Amdt 2A.
24-Jul-14	CO	Fort Morgan	Fort Morgan Muni	4/3386	05/20/14	RNAV (GPS) RWY 32, Orig.
24-Jul-14	KY	Tompkinsville	Tompkinsville-Monroe County.	4/3408	05/28/14	RNAV (GPS) RWY 22, Amdt 1.
24-Jul-14	KY	Williamsburg	Williamsburg-Whitley County.	4/3521	05/28/14	RNAV (GPS) RWY 20, Amdt 1.
24-Jul-14	KY	Williamsburg	Williamsburg-Whitley County.	4/3522	05/28/14	LOC/DME RWY 20, Orig.

AIRAC date	State	City	Airport	FDC No.	FDC date	Subject
24-Jul-14	KY	Williamsburg	Williamsburg-Whitley County.	4/3523	05/28/14	VOR/DME RWY 20, Orig-A.
24-Jul-14	AK	Homer	Homer	4/3540	05/29/14	RNAV (GPS) Z RWY 22, Amdt 1A.
24-Jul-14	AK	Homer	Homer	4/3541	05/29/14	RNAV (GPS) Z RWY 4, Amdt 1A.
24-Jul-14	AK	Homer	Homer	4/3542	05/29/14	RNAV (GPS) Y RWY 4, Amdt 1A.
24-Jul-14	AK	Homer	Homer	4/3543	05/29/14	LOC/DME RWY 4, Amdt 10.
24-Jul-14	AK	Homer	Homer	4/3544	05/29/14	LOC/DME BC RWY 22, Amdt 5B.
24-Jul-14	AK	Homer	Homer	4/3545	05/29/14	RNAV (GPS) Y RWY 22, Amdt 1A.
24-Jul-14	AK	Northway	Northway	4/3562	06/02/14	RNAV (GPS) RWY 23, Amdt 1B.
24-Jul-14	NJ	Newark	Newark Liberty Intl	4/3576	05/28/14	ILS OR LOC RWY 22L, Amdt 13A.
24-Jul-14	FL	Umatilla	Umatilla Muni	4/3577	05/22/14	RNAV (GPS) RWY 19, Orig.
24-Jul-14	FL	Umatilla	Umatilla Muni	4/3578	05/22/14	RNAV (GPS) RWY 1, Orig.
24-Jul-14	NJ	Newark	Newark Liberty Intl	4/3579	05/28/14	RNAV (GPS) Y RWY 4R, Amdt 1D.
24-Jul-14	NJ	Newark	Newark Liberty Intl	4/3580	05/28/14	ILS RWY 22L (CAT II & III), Amdt 13A.
24-Jul-14	NJ	Newark	Newark Liberty Intl	4/3582	05/28/14	RNAV (RNP) Y RWY 29, Amdt 1A.
24-Jul-14	NJ	Newark	Newark Liberty Intl	4/3587	05/28/14	ILS RWY 22L (SA CAT I), Amdt 13A.
24-Jul-14	MO	Branson	M. Graham Clark Downtown.	4/3676	05/19/14	RNAV (GPS) RWY 30, Orig-A.
24-Jul-14	MO	Branson	M. Graham Clark Downtown.	4/3677	05/19/14	RNAV (GPS) RWY 12, Orig-A.
24-Jul-14	GA	Griffin	Griffin-Spalding County	4/3743	05/28/14	RNAV (GPS) RWY 14, Orig-A.
24-Jul-14	GA	Griffin	Griffin-Spalding County	4/3746	05/28/14	RNAV (GPS) RWY 32, Orig.
24-Jul-14	AK	Palmer	Palmer Muni	4/3791	06/02/14	RNAV (GPS) RWY 9, Amdt 1.
24-Jul-14	TX	Granbury	Granbury Rgnl	4/3862	05/30/14	RNAV (GPS) RWY 14, Orig.
24-Jul-14	TX	Granbury	Granbury Rgnl	4/3863	05/30/14	VOR/DME RWY 14, Amdt 1.
24-Jul-14	TX	Granbury	Granbury Rgnl	4/3864	05/30/14	VOR/DME A, Orig-B.
24-Jul-14	FL	Leesburg	Leesburg Intl	4/3939	06/02/14	RNAV (GPS) RWY 13, Amdt 2A.
24-Jul-14	AK	Chevak	Chevak	4/4078	06/04/14	RNAV (GPS) RWY 2, Orig-B.
24-Jul-14	KY	Louisville	Bowman Field	4/4192	05/28/14	RNAV (GPS) RWY 33, Orig.
24-Jul-14	KY	Louisville	Bowman Field	4/4194	05/28/14	NDB RWY 33, Amdt 16.
24-Jul-14	KY	Louisville	Bowman Field	4/4195	05/28/14	VOR RWY 24, Amdt 8.
24-Jul-14	MS	Booneville/Baldwyn	Booneville/Baldwyn	4/4221	06/02/14	RNAV (GPS) RWY 15, Amdt 1.
24-Jul-14	MS	Booneville/Baldwyn	Booneville/Baldwyn	4/4227	06/02/14	RNAV (GPS) RWY 33, Amdt 1.
24-Jul-14	CA	Red Bluff	Red Bluff Muni	4/4576	06/02/14	RNAV (GPS) RWY 15, Amdt 1.
24-Jul-14	WY	Pinedale	Ralph Wenz Field	4/4577	06/02/14	RNAV (GPS) RWY 29, Amdt 2.
24-Jul-14	WY	Pinedale	Ralph Wenz Field	4/4601	06/02/14	RNAV (GPS) RWY 11, Amdt 2.
24-Jul-14	CA	Red Bluff	Red Bluff Muni	4/4602	06/02/14	VOR/DME RWY 15, Amdt 8.
24-Jul-14	CO	Hayden	Yampa Valley	4/4603	05/29/14	RNAV (GPS) RWY 28, Amdt 2A.
24-Jul-14	GA	Reidsville	Swinton Smith Fld At Reidsville Muni.	4/4657	05/28/14	RNAV (GPS) RWY 11, Amdt 1.
24-Jul-14	GA	Reidsville	Swinton Smith Fld At Reidsville Muni.	4/4659	05/28/14	NDB RWY 11, Amdt 8.
24-Jul-14	AK	Yakutat	Yakutat	4/4661	05/20/14	RNAV (GPS) RWY 29, Amdt 4A.
24-Jul-14	AK	Yakutat	Yakutat	4/4663	05/20/14	LOC/DME BC RWY 29, Amdt 7A.
24-Jul-14	AK	Yakutat	Yakutat	4/4665	05/20/14	VOR/DME RWY 29, Amdt 4A.
24-Jul-14	AK	Yakutat	Yakutat	4/4667	05/20/14	ILS OR LOC/DME RWY 11, Amdt 3.
24-Jul-14	AK	Yakutat	Yakutat	4/4668	05/20/14	VOR/DME RWY 11, Amdt 3.
24-Jul-14	AK	Yakutat	Yakutat	4/4669	05/20/14	RNAV (GPS) RWY 2, Amdt 3.
24-Jul-14	OR	Portland	Portland Intl	4/4726	05/28/14	RNAV (RNP) Z RWY 28R, Amdt 1.
24-Jul-14	CA	Oakland	Metropolitan Oakland Intl.	4/4834	05/29/14	RNAV (GPS) Y RWY 28L, Amdt 3.
24-Jul-14	CA	Oakland	Metropolitan Oakland Intl.	4/4837	05/29/14	VOR/DME RWY 28L, Amdt 12.
24-Jul-14	CA	Oakland	Metropolitan Oakland Intl.	4/4838	05/29/14	ILS OR LOC RWY 30, Amdt 27.
24-Jul-14	CA	Oakland	Metropolitan Oakland Intl.	4/4839	05/29/14	RNAV (RNP) Z RWY 30, Amdt 1A.
24-Jul-14	CA	Oakland	Metropolitan Oakland Intl.	4/4852	05/29/14	RNAV (GPS) Y RWY 30, Amdt 3.
24-Jul-14	CA	Oakland	Metropolitan Oakland Intl.	4/4885	05/29/14	RNAV (RNP) Z RWY 12, Amdt 1A.

AIRAC date	State	City	Airport	FDC No.	FDC date	Subject
24-Jul-14	CA	Oakland	Metropolitan Oakland Intl.	4/4886	05/29/14	ILS OR LOC RWY 12, Amdt 7.
24-Jul-14	CA	Oakland	Metropolitan Oakland Intl.	4/4887	05/29/14	RNAV (GPS) RWY 10L, Amdt 1.
24-Jul-14	CA	Oakland	Metropolitan Oakland Intl.	4/4888	05/29/14	RNAV (GPS) Y RWY 28R, Amdt 2A.
24-Jul-14	CA	Oakland	Metropolitan Oakland Intl.	4/4889	05/29/14	RNAV (RNP) Z RWY 28R, Amdt 1A.
24-Jul-14	CA	Oakland	Metropolitan Oakland Intl.	4/4890	05/29/14	ILS OR LOC/DME RWY 28R, Amdt 36.
24-Jul-14	AK	Unalakleet	Unalakleet	4/4897	05/28/14	VOR/DME D, Amdt 5.
24-Jul-14	AK	Unalakleet	Unalakleet	4/4898	05/28/14	LOC/DME RWY 15, Amdt 4.
24-Jul-14	LA	Baton Rouge	Baton Rouge Metropolitan, Ryan Field.	4/4899	06/04/14	ILS OR LOC RWY 22R, Amdt 11.
24-Jul-14	LA	Baton Rouge	Baton Rouge Metropolitan, Ryan Field.	4/4901	06/04/14	RNAV (GPS) RWY 22R, Amdt 2.
24-Jul-14	AK	Unalakleet	Unalakleet	4/4902	05/28/14	RNAV (GPS) A, Orig.
24-Jul-14	AK	Unalakleet	Unalakleet	4/4903	05/28/14	RNAV (GPS) Z RWY 33, Orig.
24-Jul-14	AK	Unalakleet	Unalakleet	4/4904	05/28/14	RNAV (GPS) Y RWY 33, Orig-A.
24-Jul-14	CA	Santa Maria	Santa Maria Pub/Capt G Allan Hancock Fld.	4/4932	05/29/14	ILS OR LOC RWY 12, Amdt 10.
24-Jul-14	CA	Burbank	Bob Hope	4/4949	05/28/14	RNAV (RNP) Y RWY 8, Orig.
24-Jul-14	CA	Burbank	Bob Hope	4/4950	05/28/14	RNAV (GPS) X RWY 8, Orig-D.
24-Jul-14	ID	Boise	Boise Air Terminal/ Gowen Fld.	4/5023	05/20/14	VOR/DME OR TACAN RWY 10L, Amdt 2.
24-Jul-14	ID	Boise	Boise Air Terminal/ Gowen Fld.	4/5028	05/20/14	VOR/DME RWY 10R, Amdt 1.
24-Jul-14	ID	Boise	Boise Air Terminal/ Gowen Fld.	4/5035	05/20/14	RNAV (GPS) Y RWY 28R, Amdt 4A.
24-Jul-14	GA	Atlanta	Covington Muni	4/5107	05/28/14	RNAV (GPS) RWY 28, Amdt 1.
24-Jul-14	GA	Atlanta	Covington Muni	4/5109	05/28/14	NDB RWY 28, Amdt 3.
24-Jul-14	NC	Louisburg	Triangle North Executive	4/5125	05/30/14	ILS OR LOC RWY 5, Amdt 4.
24-Jul-14	NC	Louisburg	Triangle North Executive	4/5126	05/30/14	RNAV (GPS) RWY 23, Amdt 1.
24-Jul-14	NC	Louisburg	Triangle North Executive	4/5127	05/30/14	RNAV (GPS) RWY 5, Amdt 1.
24-Jul-14	FL	Leesburg	Leesburg Intl	4/5183	06/02/14	RNAV (GPS) RWY 3, Amdt 1A.
24-Jul-14	FL	Leesburg	Leesburg Intl	4/5185	06/02/14	NDB RWY 31, Amdt 2.
24-Jul-14	FL	Crystal River	Crystal River	4/5218	06/02/14	RNAV (GPS) RWY 27, Amdt 1.
24-Jul-14	FL	Crystal River	Crystal River	4/5219	06/02/14	RNAV (GPS) RWY 9, Amdt 1.
24-Jul-14	SC	Union	Union County, Troy Shelton Field.	4/5230	06/02/14	NDB RWY 5, Orig-A.
24-Jul-14	CA	Stockton	Stockton Metropolitan	4/5243	06/04/14	VOR RWY 29R, Amdt 18D.
24-Jul-14	CA	Stockton	Stockton Metropolitan	4/5246	06/04/14	ILS OR LOC RWY 29R, Amdt 20.
24-Jul-14	NY	Albany	Albany Intl	4/5502	05/30/14	ILS RWY 1 (SA CAT II), Amdt 11A.
24-Jul-14	NY	Albany	Albany Intl	4/5507	05/30/14	RNAV (RNP) Z RWY 1, Orig.
24-Jul-14	NY	Albany	Albany Intl	4/5508	05/30/14	RNAV (GPS) Y RWY 19, Amdt 1.
24-Jul-14	NY	Albany	Albany Intl	4/5510	05/30/14	RNAV (GPS) Y RWY 1, Amdt 1.
24-Jul-14	NY	Albany	Albany Intl	4/5512	05/30/14	RNAV (RNP) Z RWY 19, Orig.
24-Jul-14	NY	Albany	Albany Intl	4/5513	05/30/14	ILS OR LOC RWY 1, Amdt 11A.
24-Jul-14	NY	Albany	Albany Intl	4/5518	05/30/14	ILS OR LOC RWY 19, Amdt 23.
24-Jul-14	CA	Palmdale	Palmdale USAF Plant 42.	4/5657	05/20/14	RNAV (GPS) RWY 25, Amdt 1.
24-Jul-14	CA	Palmdale	Palmdale USAF Plant 42.	4/5658	05/20/14	ILS OR LOC RWY 25, Amdt 9.
24-Jul-14	CA	Oroville	Oroville Muni	4/5663	05/28/14	RNAV (GPS) RWY 2, Orig-A.
24-Jul-14	CA	Fresno	Fresno Yosemite Intl	4/6072	05/30/14	ILS OR LOC/DME RWY 29R, Amdt 38.
24-Jul-14	FL	Bonifay	Tri-County	4/6116	06/04/14	RNAV (GPS) RWY 19, Orig.
24-Jul-14	AK	Mcgrath	Mc Grath	4/6276	05/19/14	Takeoff Minimums and Obstacle DP, Amdt 2A.
24-Jul-14	UT	Salt Lake City	Salt Lake City Intl	4/6279	05/29/14	RNAV (GPS) RWY 35, Amdt 2.
24-Jul-14	UT	Salt Lake City	Salt Lake City Intl	4/6281	05/29/14	RNAV (GPS) RWY 34R, Amdt 1.
24-Jul-14	UT	Salt Lake City	Salt Lake City Intl	4/6282	05/29/14	ILS OR LOC RWY 34R, Amdt 4.
24-Jul-14	UT	Salt Lake City	Salt Lake City Intl	4/6284	05/29/14	ILS RWY 34R (SA CAT I), Amdt 4.
24-Jul-14	UT	Salt Lake City	Salt Lake City Intl	4/6285	05/29/14	ILS RWY 34R (CAT II & CAT III), Amdt 4.
24-Jul-14	UT	Salt Lake City	Salt Lake City Intl	4/6286	05/29/14	ILS RWY 34L (SA CAT I), Amdt 3.
24-Jul-14	UT	Salt Lake City	Salt Lake City Intl	4/6287	05/29/14	ILS RWY 34L (CAT II & CAT III), Amdt 3.
24-Jul-14	UT	Salt Lake City	Salt Lake City Intl	4/6288	05/29/14	ILS OR LOC RWY 34L, Amdt 3.

AIRAC date	State	City	Airport	FDC No.	FDC date	Subject
24-Jul-14	UT	Salt Lake City	Salt Lake City Intl	4/6289	05/29/14	RNAV (GPS) RWY 34L, Amdt 1.
24-Jul-14	UT	Salt Lake City	Salt Lake City Intl	4/6290	05/29/14	LDA/DME RWY 35, Orig-A.
24-Jul-14	WY	Torrington	Torrington Muni	4/6384	06/03/14	GPS RWY 28, Orig-B.
24-Jul-14	WY	Torrington	Torrington Muni	4/6385	06/03/14	GPS RWY 10, Orig-B.
24-Jul-14	WY	Torrington	Torrington Muni	4/6386	06/03/14	NDB RWY 28, Amdt 2.
24-Jul-14	WY	Torrington	Torrington Muni	4/6387	06/03/14	NDB RWY 10, Amdt 2.
24-Jul-14	MT	Great Falls	Great Falls Intl	4/6554	06/02/14	ILS OR LOC/DME RWY 3, ILS RWY 3 (SA CAT I), ILS RWY 3 (CAT II & III), Amdt 5A.
24-Jul-14	MT	Great Falls	Great Falls Intl	4/6556	06/02/14	RNAV (RNP) Z RWY 3, Orig-A.
24-Jul-14	MT	Great Falls	Great Falls Intl	4/6574	06/02/14	RNAV (GPS) Y RWY 3, Amdt 3.
24-Jul-14	MT	Great Falls	Great Falls Intl	4/6579	06/02/14	RNAV (GPS) Y RWY 21, Orig.
24-Jul-14	MT	Great Falls	Great Falls Intl	4/6580	06/02/14	RNAV (RNP) Z RWY 21, Orig.
24-Jul-14	CA	Los Angeles	Los Angeles Intl	4/6582	05/29/14	ILS OR LOC RWY 7L, Amdt 7B.
24-Jul-14	CA	Los Angeles	Los Angeles Intl	4/6583	05/29/14	ILS OR LOC RWY 6L, Amdt 12B.
24-Jul-14	CA	Los Angeles	Los Angeles Intl	4/6585	05/29/14	RNAV (GPS) RWY 25R, Amdt 2A.
24-Jul-14	CA	Los Angeles	Los Angeles Intl	4/6586	05/29/14	ILS OR LOC RWY 25R, Amdt 17B.
24-Jul-14	CA	Los Angeles	Los Angeles Intl	4/6587	05/29/14	ILS OR LOC RWY 25L, Amdt 12B.
24-Jul-14	CA	Los Angeles	Los Angeles Intl	4/6592	05/29/14	ILS OR LOC RWY 24R, Amdt 24B.
24-Jul-14	CA	Los Angeles	Los Angeles Intl	4/6593	05/29/14	RNAV (GPS) Y RWY 25L, Amdt 3A.
24-Jul-14	CA	Los Angeles	Los Angeles Intl	4/6594	05/29/14	ILS OR LOC RWY 6R, Amdt 17B.
24-Jul-14	CA	Los Angeles	Los Angeles Intl	4/6597	05/29/14	ILS OR LOC RWY 7R, Amdt 6C.
24-Jul-14	CA	Los Angeles	Los Angeles Intl	4/6598	05/29/14	ILS OR LOC RWY 24L, Amdt 26A.
24-Jul-14	CA	Los Angeles	Los Angeles Intl	4/6599	05/29/14	RNAV (GPS) Y RWY 24L, Amdt 2A.
24-Jul-14	CA	Los Angeles	Los Angeles Intl	4/6600	05/29/14	RNAV (RNP) Z RWY 24L, Amdt 1B.
24-Jul-14	CA	Los Angeles	Los Angeles Intl	4/6601	05/29/14	RNAV (RNP) Z RWY 25L, Amdt 1A.
24-Jul-14	CA	Los Angeles	Los Angeles Intl	4/6602	05/29/14	ILS RWY 25L (CAT II & CAT III), Amdt 12B.
24-Jul-14	SC	Union	Union County, Troy Shelton Field.	4/6627	06/02/14	RNAV (GPS) RWY 23, Orig.
24-Jul-14	AL	Marion	Vaiden Field	4/6637	06/02/14	RNAV (GPS) RWY 16, Amdt 1.
24-Jul-14	AK	Cordova	Merle K (Mudhole) Smith.	4/6649	05/28/14	RNAV (GPS) RWY 27, Amdt 2.
24-Jul-14	AK	Cordova	Merle K (Mudhole) Smith.	4/6650	05/28/14	ILS OR LOC/DME RWY 27, Amdt 11.
24-Jul-14	FL	Merritt Island	Merritt Island	4/6651	06/02/14	RNAV (GPS) RWY 11, Amdt 1A.
24-Jul-14	AZ	Phoenix	Phoenix-Mesa Gateway	4/6665	05/29/14	RNAV (GPS) Y RWY 30C, Amdt 1.
24-Jul-14	AZ	Phoenix	Phoenix-Mesa Gateway	4/6666	05/29/14	RNAV (RNP) Z RWY 30C, Orig.
24-Jul-14	AZ	Phoenix	Phoenix-Mesa Gateway	4/6667	05/29/14	RNAV (GPS) RWY 12R, Amdt 1.
24-Jul-14	AZ	Phoenix	Phoenix-Mesa Gateway	4/6668	05/29/14	RNAV (GPS) RWY 30L, Amdt 1.
24-Jul-14	NC	Wadesboro	Anson County—Jeff Cloud Field.	4/6737	05/28/14	ILS OR LOC RWY 34, Orig-A.
24-Jul-14	NC	Wadesboro	Anson County—Jeff Cloud Field.	4/6739	05/28/14	RNAV (GPS) RWY 34, Amdt 2.
24-Jul-14	NC	Wadesboro	Anson County—Jeff Cloud Field.	4/6741	05/28/14	RNAV (GPS) RWY 16, Amdt 1.
24-Jul-14	KY	Mount Sterling	Mount Sterling-Montgomery County.	4/6820	05/28/14	NDB RWY 3, Amdt 2.
24-Jul-14	KY	Mount Sterling	Mount Sterling-Montgomery County.	4/6821	05/28/14	NDB RWY 21, Amdt 2A.
24-Jul-14	KY	Mount Sterling	Mount Sterling-Montgomery County.	4/6822	05/28/14	RNAV (GPS) RWY 21, Orig.
24-Jul-14	KY	Mount Sterling	Mount Sterling-Montgomery County.	4/6823	05/28/14	RNAV (GPS) RWY 3, Orig.
24-Jul-14	WA	Pasco	Tri-Cities	4/6862	05/22/14	RNAV (RNP) Z RWY 21R, Orig-A.
24-Jul-14	WA	Pasco	Tri-Cities	4/6863	05/22/14	RNAV (RNP) Z RWY 12, Orig.
24-Jul-14	CA	Fresno	Fresno Yosemite Intl	4/6864	05/30/14	LOC RWY 11L, Amdt 2A.
24-Jul-14	WA	Pasco	Tri-Cities	4/6865	05/22/14	RNAV (RNP) Z RWY 3L, Orig-A.
24-Jul-14	AK	Sitka	Sitka Rocky Gutierrez	4/6872	05/28/14	LDA/DME RWY 11, Amdt 15.
24-Jul-14	AK	Sitka	Sitka Rocky Gutierrez	4/6876	05/28/14	RNAV (GPS) RWY 11, Amdt 1.
24-Jul-14	WA	Pasco	Tri-Cities	4/6883	05/22/14	RNAV (RNP) Z RWY 30, Orig-A.

AIRAC date	State	City	Airport	FDC No.	FDC date	Subject
24-Jul-14	WA	Seattle	Boeing Field/King County Intl.	4/6968	06/04/14	LOC/DME RWY 13R, Amdt 2.
24-Jul-14	WA	Spokane	Spokane Intl	4/7004	05/29/14	ILS OR LOC RWY 3, ILS RWY 3 (SA CAT I), ILS RWY 3 (CAT II & CAT III), Amdt 6A.
24-Jul-14	WA	Spokane	Spokane Intl	4/7015	05/29/14	ILS RWY 21 (CAT II & CAT III), Amdt 23A.
24-Jul-14	WA	Spokane	Spokane Intl	4/7018	05/29/14	ILS RWY 21 (SA CAT I), Amdt 23A.
24-Jul-14	WA	Spokane	Spokane Intl	4/7019	05/29/14	ILS OR LOC/DME RWY 21, Amdt 23A.
24-Jul-14	CO	Walsenburg	Spanish Peaks Airfield	4/7024	06/03/14	RNAV (GPS) RWY 27, Amdt 1.
24-Jul-14	WA	Seattle	Boeing Field/King County Intl.	4/7026	06/04/14	ILS RWY 13R, Amdt 30.
24-Jul-14	CO	Walsenburg	Spanish Peaks Airfield	4/7028	06/03/14	RNAV (GPS) RWY 9, Amdt 1.
24-Jul-14	WA	Spokane	Spokane Intl	4/7030	05/29/14	RNAV (GPS) Y RWY 3, Amdt 2A.
24-Jul-14	WA	Spokane	Spokane Intl	4/7035	05/29/14	RNAV (RNP) Z RWY 21, Amdt 1.
24-Jul-14	WA	Spokane	Spokane Intl	4/7081	05/29/14	RNAV (GPS) Y RWY 21, Amdt 2.
24-Jul-14	AK	Anchorage	Ted Stevens Anchorage Intl.	4/7089	05/29/14	RNAV (GPS) RWY 15, Amdt 2.
24-Jul-14	AK	Anchorage	Ted Stevens Anchorage Intl.	4/7090	05/29/14	ILS RWY 15, Amdt 6.
24-Jul-14	AK	Anchorage	Ted Stevens Anchorage Intl.	4/7095	05/29/14	RNAV (GPS) RWY 7R, Amdt 4.
24-Jul-14	AK	Anchorage	Ted Stevens Anchorage Intl.	4/7096	05/29/14	ILS OR LOC/DME RWY 7R, Amdt 3.
24-Jul-14	AK	Anchorage	Ted Stevens Anchorage Intl.	4/7107	05/29/14	RNAV (GPS) RWY 7L, Amdt 2A.
24-Jul-14	AK	Anchorage	Ted Stevens Anchorage Intl.	4/7108	05/29/14	ILS RWY 7R (SA CAT I), Amdt 3.
24-Jul-14	AK	Anchorage	Ted Stevens Anchorage Intl.	4/7109	05/29/14	ILS OR LOC/DME RWY 7L, Amdt 3.
24-Jul-14	AK	Anchorage	Ted Stevens Anchorage Intl.	4/7113	05/29/14	ILS RWY 7R (CAT II & III), Amdt 3.
24-Jul-14	AK	Anchorage	Ted Stevens Anchorage Intl.	4/7114	05/29/14	ILS RWY 7L (SA CAT I & II), Amdt 3.
24-Jul-14	CA	Salinas	Salinas Muni	4/7158	06/03/14	ILS RWY 31, Amdt 5D.
24-Jul-14	WA	Everett	Snohomish County (Paine Fld).	4/7265	05/29/14	RNAV (GPS) RWY 34L, Amdt 1.
24-Jul-14	WA	Everett	Snohomish County (Paine Fld).	4/7266	05/29/14	RNAV (GPS) Y RWY 16R, Amdt 1.
24-Jul-14	WA	Everett	Snohomish County (Paine Fld).	4/7267	05/29/14	RNAV (GPS) Z RWY 16R, Orig.
24-Jul-14	WA	Everett	Snohomish County (Paine Fld).	4/7269	05/29/14	ILS OR LOC/DME Y RWY 16R, Amdt 22.
24-Jul-14	WA	Everett	Snohomish County (Paine Fld).	4/7270	05/29/14	ILS Z RWY 16R (CAT II), Orig.
24-Jul-14	GA	Columbus	Columbus	4/7381	06/04/14	ILS OR LOC RWY 6, Amdt 25A.
24-Jul-14	AK	Scammon Bay	Scammon Bay	4/7469	06/02/14	RNAV (GPS) RWY 28, Amdt 1.
24-Jul-14	SC	Florence	Florence Rgnl	4/7548	06/04/14	RNAV (GPS) RWY 19, Orig.
24-Jul-14	SC	Florence	Florence Rgnl	4/7549	06/04/14	VOR OR TACAN A, Amdt 6.
24-Jul-14	SC	Florence	Florence Rgnl	4/7550	06/04/14	RNAV (GPS) RWY 27, Orig.
24-Jul-14	SC	Florence	Florence Rgnl	4/7551	06/04/14	RNAV (GPS) RWY 1, Orig.
24-Jul-14	SC	Florence	Florence Rgnl	4/7552	06/04/14	ILS OR LOC RWY 9, Amdt 12.
24-Jul-14	SC	Rock Hill	Rock Hill/York Co/Bryant Field.	4/7599	05/30/14	Takeoff Minimums and Obstacle DP, Amdt 1.
24-Jul-14	CA	Santa Maria	Santa Maria Pub/Capt G Allan Hancock Fld.	4/7639	05/29/14	RNAV (GPS) RWY 12, Amdt 1.
24-Jul-14	CA	Santa Maria	Santa Maria Pub/Capt G Allan Hancock Fld.	4/7641	05/29/14	VOR RWY 12, Amdt 15.
24-Jul-14	KY	Monticello	Wayne County	4/7810	05/28/14	RNAV (GPS) RWY 21, Orig.
24-Jul-14	KY	Monticello	Wayne County	4/7811	05/28/14	RNAV (GPS) RWY 3, Orig.
24-Jul-14	GA	Canton	Cherokee County	4/7819	06/02/14	RNAV (GPS) RWY 23, Amdt 1.
24-Jul-14	GA	Canton	Cherokee County	4/7821	06/02/14	RNAV (GPS) RWY 5, Amdt 1.
24-Jul-14	GA	Canton	Cherokee County	4/7822	06/02/14	NDB RWY 5, Amdt 4
24-Jul-14	PA	York	York	4/7936	05/22/14	RNAV (GPS) RWY 35, Amdt 1A.
24-Jul-14	PA	York	York	4/7937	05/22/14	RNAV (GPS) RWY 17, Amdt 2A.
24-Jul-14	NY	Fulton	Oswego County	4/7946	05/22/14	RNAV (GPS) RWY 33, Orig-A.
24-Jul-14	NY	Fulton	Oswego County	4/7947	05/22/14	ILS OR LOC RWY 33, Amdt 1A.
24-Jul-14	WY	Buffalo	Johnson County	4/8236	05/20/14	VOR/DME RWY 31, Amdt 6.
24-Jul-14	WY	Buffalo	Johnson County	4/8237	05/20/14	RNAV (GPS) RWY 31, Amdt 1.
24-Jul-14	MA	Hopedale	Hopedale Industrial Park	4/8589	05/22/14	RNAV (GPS) A, Orig.

AIRAC date	State	City	Airport	FDC No.	FDC date	Subject
24-Jul-14	AZ	Springerville	Springerville Muni	4/8714	05/30/14	RNAV (GPS) RWY 21, Amdt 1.
24-Jul-14	KY	Tompkinsville	Tompkinsville-Monroe County.	4/8883	05/28/14	RNAV (GPS) RWY 4, Amdt 1.
24-Jul-14	CO	Montrose	Montrose Rgnl	4/8917	06/03/14	ILS OR LOC/DME RWY 17, Amdt 2B.
24-Jul-14	HI	Kamuela	Waimea-Kohala	4/8918	05/28/14	RNAV (GPS) RWY 4, Amdt 1.
24-Jul-14	HI	Kamuela	Waimea-Kohala	4/8919	05/28/14	VOR/DME RWY 4, Amdt 1.
24-Jul-14	CA	Brawley	Brawley Muni	4/8991	05/30/14	VOR/DME A, Amdt 1A.
24-Jul-14	CA	Brawley	Brawley Muni	4/8997	05/30/14	VOR/DME B, Amdt 2A.
24-Jul-14	FL	Brooksville	Hernando County	4/9192	05/19/14	Takeoff Minimums and Obstacle DP, Orig.
24-Jul-14	FL	Brooksville	Hernando County	4/9193	05/19/14	ILS OR LOC RWY 9, Amdt 2D.
24-Jul-14	FL	Brooksville	Hernando County	4/9197	05/19/14	RNAV (GPS) RWY 9, Amdt 1B.
24-Jul-14	FL	Brooksville	Hernando County	4/9200	05/19/14	RNAV (GPS) RWY 21, Amdt 1C.
24-Jul-14	FL	Brooksville	Hernando County	4/9211	05/19/14	RNAV (GPS) RWY 3, Amdt 1B.
24-Jul-14	FL	Brooksville	Hernando County	4/9212	05/19/14	RNAV (GPS) RWY 27, Amdt 1B.
24-Jul-14	CO	Denver	Denver Intl	4/9225	05/30/14	RNAV (GPS) Y RWY 17R, Amdt 1.
24-Jul-14	AZ	Grand Canyon	Valle	4/9228	05/30/14	GPS RWY 1, Orig-A.
24-Jul-14	AZ	Grand Canyon	Valle	4/9230	05/30/14	GPS RWY 19, Orig.
24-Jul-14	AL	Demopolis	Demopolis Muni	4/9265	05/19/14	Takeoff Minimums and Obstacle DP, Amdt 1.
24-Jul-14	AL	Demopolis	Demopolis Muni	4/9266	05/19/14	RNAV (GPS) RWY 22, Orig.
24-Jul-14	AL	Demopolis	Demopolis Muni	4/9267	05/19/14	RNAV (GPS) RWY 4, Orig.
24-Jul-14	NY	Williamson/Sodus	Williamson-Sodus	4/9537	05/19/14	RNAV (GPS) RWY 10, Amdt 1A.
24-Jul-14	WA	Port Angeles	William R Fairchild Intl	4/9538	05/19/14	RNAV (GPS) RWY 8, Orig-A.
24-Jul-14	WA	Port Angeles	William R Fairchild Intl	4/9539	05/19/14	ILS OR LOC RWY 8, Amdt 2A.
24-Jul-14	WA	Port Angeles	William R Fairchild Intl	4/9540	05/19/14	RNAV (GPS) RWY 26, Orig.
24-Jul-14	NY	Potsdam	Potsdam Muni/Damon Fld/.	4/9599	05/30/14	NDB RWY 24, Amdt 5.
24-Jul-14	NJ	Newark	Newark Liberty Intl	4/9603	05/30/14	ILS OR LOC RWY 22R, Amdt 6.
24-Jul-14	FL	Fort Pierce	St Lucie County Intl	4/9685	06/02/14	ILS OR LOC RWY 10R, Amdt 4.
24-Jul-14	FL	Fort Pierce	St Lucie County Intl	4/9686	06/02/14	RNAV (GPS) RWY 10R, Amdt 2.
24-Jul-14	MT	Roundup	Roundup	4/9694	05/29/14	RNAV (GPS) RWY 25, Orig.
24-Jul-14	MT	Roundup	Roundup	4/9695	05/29/14	RNAV (GPS) RWY 7, Orig.
24-Jul-14	MT	Dillon	Dillon	4/9744	05/20/14	RNAV (GPS) RWY 17, Amdt 1.
24-Jul-14	VA	Clarksville	Lake Country Regional	4/9751	06/02/14	RNAV (GPS) RWY 22, Orig.
24-Jul-14	MT	Ronan	Ronan	4/9796	06/03/14	RNAV (GPS) RWY 34, Amdt 1.
24-Jul-14	MT	Ronan	Ronan	4/9817	06/03/14	RNAV (GPS) RWY 16, Amdt 1.
24-Jul-14	AK	Tatitlek	Tatitlek	4/9931	05/20/14	RNAV (GPS) RWY 31, Orig-A.

[FR Doc. 2014–15917 Filed 7–10–14; 8:45 am]

BILLING CODE 4910–13–P

DEPARTMENT OF TRANSPORTATION

Federal Aviation Administration

14 CFR Part 97

[Docket No. 30963 Amdt. No. 3595]

Standard Instrument Approach Procedures, and Takeoff Minimums and Obstacle Departure Procedures; Miscellaneous Amendments

AGENCY: Federal Aviation Administration (FAA), DOT.

ACTION: Final rule.

SUMMARY: This rule establishes, amends, suspends, or revokes Standard Instrument Approach Procedures (SIAPs) and associated Takeoff Minimums and Obstacle Departure Procedures for operations at certain airports. These regulatory actions are needed because of the adoption of new or revised criteria, or because of changes occurring in the National Airspace System, such as the commissioning of new navigational facilities, adding new obstacles, or changing air traffic requirements. These changes are designed to provide safe and efficient use of the navigable airspace and to promote safe flight operations under instrument flight rules at the affected airports.

DATES: This rule is effective July 11, 2014. The compliance date for each SIAP, associated Takeoff Minimums, and ODP is specified in the amendatory provisions.

The incorporation by reference of certain publications listed in the regulations is approved by the Director of the Federal Register as of July 11, 2014.

ADDRESSES: Availability of matters incorporated by reference in the amendment is as follows:

For Examination—

1. FAA Rules Docket, FAA Headquarters Building, 800 Independence Avenue SW., Washington, DC 20591;

2. The FAA Regional Office of the region in which the affected airport is located;

3. The National Flight Procedures Office, 6500 South MacArthur Blvd., Oklahoma City, OK 73169 or,

4. The National Archives and Records Administration (NARA). For information on the availability of this material at NARA, call 202–741–6030, or go to: *http://www.archives.gov/federal_register/code_of_federal_regulations/ibr_locations.html.*

Availability—All SIAPs and Takeoff Minimums and ODPs are available online free of charge. Visit *http://www.nfdc.faa.gov* to register. Additionally, individual SIAP and Takeoff Minimums and ODP copies may be obtained from:

1. FAA Public Inquiry Center (APA–200), FAA Headquarters Building, 800

Independence Avenue SW., Washington, DC 20591; or

2. The FAA Regional Office of the region in which the affected airport is located.

FOR FURTHER INFORMATION CONTACT: Richard A. Dunham III, Flight Procedure Standards Branch (AFS–420), Flight Technologies and Programs Divisions, Flight Standards Service, Federal Aviation Administration, Mike Monroney Aeronautical Center, 6500 South MacArthur Blvd. Oklahoma City, OK. 73169 (Mail Address: P.O. Box 25082, Oklahoma City, OK 73125) Telephone: (405) 954–4164.

SUPPLEMENTARY INFORMATION: This rule amends Title 14 of the Code of Federal Regulations, Part 97 (14 CFR part 97), by establishing, amending, suspending, or revoking SIAPS, Takeoff Minimums and/or ODPS. The complete regulators description of each SIAP and its associated Takeoff Minimums or ODP for an identified airport is listed on FAA form documents which are incorporated by reference in this amendment under 5 U.S.C. 552(a), 1 CFR part 51, and 14 CFR 97.20. The applicable FAA Forms are FAA Forms 8260–3, 8260–4, 8260–5, 8260–15A, and 8260–15B when required by an entry on 8260–15A.

The large number of SIAPs, Takeoff Minimums and ODPs, in addition to their complex nature and the need for a special format make publication in the **Federal Register** expensive and impractical. Furthermore, airmen do not use the regulatory text of the SIAPs, Takeoff Minimums or ODPs, but instead refer to their depiction on charts printed by publishers of aeronautical materials. The advantages of incorporation by reference are realized and publication of the complete description of each SIAP, Takeoff Minimums and ODP listed on FAA forms is unnecessary. This amendment provides the affected CFR sections and specifies the types of SIAPs and the effective dates of the, associated Takeoff Minimums and ODPs. This amendment also identifies the airport and its location, the procedure, and the amendment number.

The Rule

This amendment to 14 CFR part 97 is effective upon publication of each separate SIAP, Takeoff Minimums and ODP as contained in the transmittal. Some SIAP and Takeoff Minimums and textual ODP amendments may have been issued previously by the FAA in a Flight Data Center (FDC) Notice to Airmen (NOTAM) as an emergency action of immediate flight safety relating directly to published aeronautical charts. The circumstances which created the need for some SIAP and Takeoff Minimums and ODP amendments may require making them effective in less than 30 days. For the remaining SIAPS and Takeoff Minimums and ODPS, an effective date at least 30 days after publication is provided.

Further, the SIAPs and Takeoff Minimums and ODPS contained in this amendment are based on the criteria contained in the U.S. Standard for Terminal Instrument Procedures (TERPS). In developing these SIAPS and Takeoff Minimums and ODPs, the TERPS criteria were applied to the conditions existing or anticipated at the affected airports. Because of the close and immediate relationship between these SIAPs, Takeoff Minimums and ODPs, and safety in air commerce, I find that notice and public procedures before adopting these SIAPS, Takeoff Minimums and ODPs are impracticable and contrary to the public interest and, where applicable, that good cause exists for making some SIAPs effective in less than 30 days.

Conclusion

The FAA has determined that this regulation only involves an established body of technical regulations for which frequent and routine amendments are necessary to keep them operationally current. It, therefore—(1) is not a ''significant regulatory action'' under Executive Order 12866; (2) is not a ''significant rule '' under DOT Regulatory Policies and Procedures (44 FR 11034; February 26,1979) ; and (3) does not warrant preparation of a regulatory evaluation as the anticipated impact is so minimal. For the same reason, the FAA certifies that this amendment will not have a significant economic impact on a substantial number of small entities under the criteria of the Regulatory Flexibility Act.

List of Subjects in 14 CFR part 97

Air Traffic Control, Airports, Incorporation by reference, and Navigation (Air).

Issued in Washington, DC, on June 6, 2014.

John Duncan,

Director, Flight Standards Service.

Adoption of the Amendment

Accordingly, pursuant to the authority delegated to me, Title 14, Code of Federal Regulations, Part 97 (14 CFR part 97) is amended by establishing, amending, suspending, or revoking Standard Instrument Approach Procedures and/or Takeoff Minimums and/or Obstacle Departure Procedures effective at 0902 UTC on the dates specified, as follows:

PART 97—STANDARD INSTRUMENT APPROACH PROCEDURES

■ 1. The authority citation for part 97 continues to read as follows:

Authority: 49 U.S.C. 106(g), 40103, 40106, 40113, 40114, 40120, 44502, 44514, 44701, 44719, 44721–44722.

■ 2. Part 97 is amended to read as follows:

Effective 24 JULY 2014

Akutan, AK, Akutan, RNAV (GPS) RWY 9, Orig
Akutan, AK, Akutan, RNAV (GPS) RWY 27, Orig
Troy, AL, Troy Municipal at N. Kenneth Campbell Field, RADAR–1, Amdt 10
Beckwourth, CA, Nervino, RNAV (GPS) Y RWY 26, Orig-C
Beckwourth, CA, Nervino, RNAV (GPS) Z RWY 26, Orig-B
Napa, CA, Napa County, RNAV (GPS) Z RWY 36L, Amdt 1A
San Francisco, CA, San Francisco Intl, Takeoff Minimums and Obstacle DP, Amdt 9
Santa Maria, CA, Santa Maria Pub/Capt G Allan Hancock Fld, RNAV (GPS) RWY 30, Orig-A
Tampa, FL, Tampa Executive, RNAV (GPS) RWY 18, Amdt 1A
Thomson, GA, Thomson-McDuffie County, RNAV (GPS) RWY 28, Orig-A
Valdosta, GA, Valdosta Rgnl, RNAV (GPS) RWY 4, Amdt 1A
Dubuque, IA, Dubuque Rgnl, LOC RWY 31, Amdt 1
Chicago, IL, Chicago Midway Intl, Takeoff Minimums and Obstacle DP, Amdt 11
Washington, KS, Washington County Veteran's Memorial, RNAV (GPS) RWY 17, Amdt 1
Washington, KS, Washington County Veteran's Memorial, RNAV (GPS) RWY 35, Amdt 1
Falmouth, MA, Cape Cod Coast Guard Air Station, RNAV (GPS) RWY 5, Orig
Falmouth, MA, Cape Cod Coast Guard Air Station, RNAV (GPS) RWY 14, Orig
Falmouth, MA, Cape Cod Coast Guard Air Station, RNAV (GPS) RWY 23, Orig
Falmouth, MA, Cape Cod Coast Guard Air Station, RNAV (GPS) RWY 32, Orig
Cumberland, MD, Greater Cumberland Rgnl, RNAV (GPS) RWY 23, Orig-C
Port Huron, MI, St Clair County Intl, RNAV (GPS) RWY 4, Amdt 1
Excelsior Springs, MO, Excelsior Springs Memorial, Takeoff Minimums and Obstacle DP, Amdt 1
Okolona, MS, Okolona Muni—Richard Stovall Field, Takeoff Minimums and Obstacle DP, Amdt 1
Elizabeth City, NC, Elizabeth City CG Air Station/Rgnl, VOR/DME RWY 1, Amdt 12
Schenectady, NY, Schenectady County, ILS OR LOC RWY 4, Amdt 5C
Aguadilla, PR, Rafael Hernandez, RNAV (GPS) RWY 26, Orig-A
Columbia, SC, Jim Hamilton L.B. Owens, RADAR–1, Amdt 2A, CANCELED

Nashville, TN, Nashville Intl, ILS OR LOC RWY 2C, Amdt 1B
Nashville, TN, Nashville Intl, ILS OR LOC RWY 20R, Amdt 10B
Nashville, TN, Nashville Intl, ILS OR LOC RWY 2L, ILS RWY 2L (SA CAT I), ILS RWY 2L (CAT II), ILS RWY 2L (CAT III), Amdt 10
Nashville, TN, Nashville Intl, ILS OR LOC/DME RWY 2R, ILS RWY 2R (SA CAT I), ILS RWY 2R (CAT II), ILS RWY 2R (CAT III), Amdt 8
Nashville, TN, Nashville Intl, ILS OR LOC/DME RWY 20L, Amdt 6
Nashville, TN, Nashville Intl, RNAV (GPS) RWY 20C, Orig-A
Nashville, TN, Nashville Intl, RNAV (GPS) Y RWY 2L, Amdt 2
Nashville, TN, Nashville Intl, RNAV (GPS) Y RWY 2R, Amdt 2
Nashville, TN, Nashville Intl, RNAV (GPS) Y RWY 20L, Amdt 2
Nashville, TN, Nashville Intl, RNAV (GPS) Y RWY 20R, Amdt 2B
Nashville, TN, Nashville Intl, RNAV (RNP) Z RWY 2C, Amdt 2
Nashville, TN, Nashville Intl, RNAV (RNP) Z RWY 2L, Amdt 2
Nashville, TN, Nashville Intl, RNAV (RNP) Z RWY 2R, Amdt 2
Nashville, TN, Nashville Intl, RNAV (RNP) Z RWY 20L, Amdt 2
Nashville, TN, Nashville Intl, RNAV (RNP) Z RWY 20R, Amdt 2
Smyrna, TN, Smyrna, RNAV (GPS) RWY 14, Amdt 1
Smyrna, TN, Smyrna, RNAV (GPS) RWY 32, Amdt 1
Danville, VA, Danville Rgnl, Takeoff Minimums and Obstacle DP, Amdt 2
Pullman/Moscow, ID, WA, Pullman/Moscow Rgnl, RNAV (GPS) RWY 24, Amdt 1A
Lewisburg, WV, Greenbrier Valley, ILS OR LOC RWY 4, Amdt 11
Lewisburg, WV, Greenbrier Valley, VOR RWY 4, Amdt 2

[FR Doc. 2014–15916 Filed 7–10–14; 8:45 am]

BILLING CODE 4910–13–P

DEPARTMENT OF STATE

22 CFR Part 34

[Public Notice: 8791]

RIN 1400–AD60

Debt Collection

AGENCY: Department of State.

ACTION: Final rule; correction.

SUMMARY: The Department of State (hereinafter, ''State'' or ''the Department'') is publishing a correction to a final rule that amended State's debt collection regulations.

DATES: This rule will become effective on July 11, 2014.

FOR FURTHER INFORMATION CONTACT: Alice Kottmyer, Office of the Legal Adviser, United States Department of State; phone: (202) 647–2199; email: *KottmyerAM@state.gov.*

SUPPLEMENTARY INFORMATION: As part of the June 20, 2014 **Federal Register** (79 FR 35282) final rule amendatory text, the Department erroneously removed ''22 CFR 34.7(a)(7)'', which does not exist. The Department's intent, however, was to remove 22 CFR 34.10(a)(7), for the reasons explained in the prior document. This document corrects that error.

List of Subjects in 22 CFR Part 34

Administrative practice and procedure, Claims, Debts, Garnishment of wages, Government employee, Hearing and appeal procedures, Pay administration, Salaries, Wages.

For the reasons stated in the preamble, 22 CFR part 34 is amended as follows:

PART 34—DEBT COLLECTION

■ 1. The authority citation for part 34 continues to read as follows:

Authority: 31 U.S.C. 3701–3719; 5 U.S.C. 5514; 31 CFR part 285; 31 CFR parts 900–904; 5 CFR part 550, subpart K.

§ 34.10 [Amended]

■ 2. Remove paragraph (a)(7) from § 34.10.

Dated: July 3, 2014.

Janet M. Freer,

Director, Office of Directives Management, Department of State.

[FR Doc. 2014–16303 Filed 7–10–14; 8:45 am]

BILLING CODE 4710–37–P

DEPARTMENT OF HOMELAND SECURITY

Coast Guard

33 CFR Part 100

[USCG–2014–0277]

RIN 1625–AA08

Special Local Regulation, Tennessee River, Mile 256.0 to 257.5; Florence, TN

AGENCY: Coast Guard, DHS.

ACTION: Temporary final rule.

SUMMARY: The Coast Guard is establishing a temporary special local regulation for the waters of the Tennessee River beginning at mile marker 256.0 and ending at mile marker 257.5, extending bank to bank. This zone is necessary to protect participants of the Renaissance Man Triathlon during the swim portion of the event. Entry into this area is prohibited unless specifically authorized by the Captain of the Port (COTP) Ohio Valley or designated representative.

DATES: This rule is effective from 5:00 a.m. to 10:30 a.m. July 13, 2014.

ADDRESSES: Documents mentioned in this preamble are part of docket [USCG–2014–0277]. To view documents mentioned in this preamble as being available in the docket, go to *http://www.regulations.gov,* type the docket number in the ''SEARCH'' box and click ''SEARCH.'' Click on Open Docket Folder on the line associated with this rulemaking. You may also visit the Docket Management Facility in Room W12–140 on the ground floor of the Department of Transportation West Building, 1200 New Jersey Avenue SE., Washington, DC 20590, between 9 a.m. and 5 p.m., Monday through Friday, except Federal holidays.

FOR FURTHER INFORMATION CONTACT: If you have questions on this temporary rule, call Petty Officer Chad Phillips, Marine Safety Detachment Nashville, at (615) 736–5421 or email at *chad.e.phillips@uscg.mil.* If you have questions on viewing or submitting material to the docket, call Cheryl Collins, Program Manager, Docket Operations, telephone (202) 366–9826.

SUPPLEMENTARY INFORMATION:

Table of Acronyms

BNM Broadcast Notices to Mariners
COTP Captain of the Port
DHS Department of Homeland Security
NPRM Notice of Proposed Rulemaking

A. Regulatory History and Information

The Coast Guard is issuing this temporary final rule without prior notice and opportunity to comment pursuant to authority under section 4(a) of the Administrative Procedure Act (APA) (5 U.S.C. 553(b)). This provision authorizes an agency to issue a rule without prior notice and opportunity to comment when the agency for good cause finds that those procedures are ''impracticable, unnecessary, or contrary to the public interest.'' Under 5 U.S.C. 553(b)(3)(B), the Coast Guard finds that good cause exists for not publishing a notice of proposed rulemaking (NPRM) with respect to this rule. The Coast Guard received notice on April 7, 2014 that the Renaissance Man Triathlon is planned to take place on July 13, 2014. The swimming portion of this event will take place on the Tennessee River from mile 256.0 to mile 257.5. Upon reviewing the details of this event, the Coast Guard determined that a special local regulation is necessary during the event's swimming portion, taking place on the Tennessee River. Completing the full NPRM process is contrary to the public interest as it would delay the additional safety measures necessary to protect participants and event personnel

from the possible marine hazards present during the swimming portion of this event. The event has been advertised and is planned by the local community. Delaying the special local regulation would also unnecessarily interfere with the planned event and with the potential to affect contractual obligations of the event sponsors.

For the same reasons, under 5 U.S.C. 553(d)(3), the Coast Guard finds that good cause exists for making this rule effective less than 30 days after publication in the **Federal Register**. Providing a full 30 days' notice and delaying the effective date for this special local regulation would be impracticable because immediate action is necessary to protect event participants from the possible marine hazards present during this swimming event.

B. Basis and Purpose

The swim portion of the Renaissance Man Triathlon takes place on the Tennessee River from mile markers 256.0 to 257.5. The Coast Guard determined that a temporary special local regulation is needed to protect the 300 participants in the Renaissance Man Triathlon during the swimming portion. The legal basis and authorities for this rulemaking establishing a special local regulation are found in 33 U.S.C. 1233, which authorizes the Coast Guard to establish and define special local regulations. The COTP Ohio Valley is establishing a special local regulation for the waters of the Tennessee River, beginning at mile marker 256.0 and ending at 257.5 to protect the participants in the swimming portion of the Renaissance Man Triathlon. Entry into this area is prohibited unless specifically authorized by the COTP Ohio Valley or designated representative.

C. Discussion of the Final Rule

The COTP Ohio Valley is establishing a special local regulation for the waters of the Tennessee River, beginning at mile marker 256.0 and ending at 257.5, during the swimming portion of the Renaissance Man Triathlon. During this event, vessels shall not enter into, depart from, or move within the regulated area without permission from the COTP Ohio Valley or his authorized representative. Persons or vessels requiring entry into or passage through the regulated area must request permission from the COTP Ohio Valley, or a designated representative. Sector Ohio Valley may be contacted on VHF–FM Channel 13 or 16, or 1–800–253–7465. This rule is effective from 5:00 a.m. to 10:30 a.m. July 13, 2014. The COTP Ohio Valley will inform the public through Broadcast Notices to Mariners (BNM) of the enforcement period for the special local regulation as well as any changes in the planned schedule.

D. Regulatory Analyses

We developed this rule after considering numerous statutes and executive orders related to rulemaking. Below we summarize our analyses based on a number of these statutes or executive orders.

1. Regulatory Planning and Review

This rule is not a significant regulatory action under section 3(f) of Executive Order 12866, Regulatory Planning and Review, as supplemented by Executive Order 13563, Improving Regulation and Regulatory Review, and does not require an assessment of potential costs and benefits under section 6(a)(3) of Executive Order 12866 or under section 1 of Executive Order 13563. The Office of Management and Budget has not reviewed it under that Order.

This special local regulation restricts transit on the Tennessee River from mile marker 256.0 through 257.5 and covers a period of five and one half hours, from 5:00 a.m. to 10:30 a.m. on July 13, 2014. Due to its short duration and limited scope, it does not pose a significant regulatory impact. BNMs will also inform the community of this special local regulation so that they may plan accordingly for this short restriction on transit. Vessel traffic may request permission from the COTP Ohio Valley or a designated representative to enter the restricted area or deviated from this regulation. Requests to deviate from this regulation will be considered on a case-by-case basis.

2. Impact on Small Entities

The Regulatory Flexibility Act of 1980 (RFA), 5 U.S.C. 601–612, as amended, requires federal agencies to consider the potential impact of regulations on small entities during rulemaking. The Coast Guard certifies under 5 U.S.C. 605(b) that this rule will not have a significant economic impact on a substantial number of small entities.

This rule will affect the following entities, some of which may be small entities: The owners or operators of vessels intending to transit mile marker 256.0 to 257.5 on the Tennessee River, from 5:00 a.m. to 10:30 a.m. on July 13, 2014. The special local regulation will not have a significant economic impact on a substantial number of small entities because this rule will be in effect for a short period of time. BNMs will also inform the community of this special local regulation so that they may plan accordingly for this short restriction on transit. Vessel traffic may request permission from the COTP Ohio Valley or a designated representative to enter the restricted area.

3. Assistance for Small Entities

Under section 213(a) of the Small Business Regulatory Enforcement Fairness Act of 1996 (Pub. L. 104–121), we want to assist small entities in understanding this rule. If the rule would affect your small business, organization, or governmental jurisdiction and you have questions concerning its provisions or options for compliance, please contact the person listed in the **FOR FURTHER INFORMATION CONTACT**, above.

Small businesses may send comments on the actions of Federal employees who enforce, or otherwise determine compliance with, Federal regulations to the Small Business and Agriculture Regulatory Enforcement Ombudsman and the Regional Small Business Regulatory Fairness Boards. The Ombudsman evaluates these actions annually and rates each agency's responsiveness to small business. If you wish to comment on actions by employees of the Coast Guard, call 1–888–REG–FAIR (1–888–734–3247). The Coast Guard will not retaliate against small entities that question or complain about this rule or any policy or action of the Coast Guard.

4. Collection of Information

This rule will not call for a new collection of information under the Paperwork Reduction Act of 1995 (44 U.S.C. 3501–3520).

5. Federalism

A rule has implications for federalism under Executive Order 13132, Federalism, if it has a substantial direct effect on the States, on the relationship between the national government and the States, or on the distribution of power and responsibilities among the various levels of government. We have analyzed this rule under that Order and determined that this rule does not have implications for federalism.

6. Protest Activities

The Coast Guard respects the First Amendment rights of protesters. Protesters are asked to contact the person listed in the **FOR FURTHER INTFORMATION CONTACT** section to coordinate protest activities so that your message can be received without jeopardizing the safety or security of people, places or vessels.

7. Unfunded Mandates Reform Act

The Unfunded Mandates Reform Act of 1995 (2 U.S.C. 1531–1538) requires Federal agencies to assess the effects of their discretionary regulatory actions. In particular, the Act addresses actions that may result in the expenditure by a State, local, or tribal government, in the aggregate, or by the private sector of $100,000,000 (adjusted for inflation) or more in any one year. Though this rule will not result in such expenditure, we do discuss the effects of this rule elsewhere in this preamble.

8. Taking of Private Property

This rule will not cause a taking of private property or otherwise have taking implications under Executive Order 12630, Governmental Actions and Interference with Constitutionally Protected Property Rights.

9. Civil Justice Reform

This rule meets applicable standards in sections 3(a) and 3(b)(2) of Executive Order 12988, Civil Justice Reform, to minimize litigation, eliminate ambiguity, and reduce burden.

10. Protection of Children

We have analyzed this rule under Executive Order 13045, Protection of Children from Environmental Health Risks and Safety Risks. This rule is not an economically significant rule and does not create an environmental risk to health or risk to safety that may disproportionately affect children.

11. Indian Tribal Governments

This rule does not have tribal implications under Executive Order 13175, Consultation and Coordination with Indian Tribal Governments, because it does not have a substantial direct effect on one or more Indian tribes, on the relationship between the Federal Government and Indian tribes, or on the distribution of power and responsibilities between the Federal Government and Indian tribes.

12. Energy Effects

This action is not a ''significant energy action'' under Executive Order 13211, Actions Concerning Regulations That Significantly Affect Energy Supply, Distribution, or Use.

13. Technical Standards

This rule does not use technical standards. Therefore, we did not consider the use of voluntary consensus standards.

14. Environment

We have analyzed this rule under Department of Homeland Security Management Directive 023–01 and Commandant Instruction M16475.lD, which guide the Coast Guard in complying with the National Environmental Policy Act of 1969 (NEPA) (42 U.S.C. 4321–4370f), and have concluded this action is one of a category of actions that do not individually or cumulatively have a significant effect on the human environment. This rule is categorically excluded, under figure 2–1, paragraph (34)(h), of the Instruction. This rule involves establishing a temporary special local regulation to protect the participants in the swimming portion of the Renaissance Man Triathlon on the Tennessee River from mile markers 256.0 to 257.5 for five and one half hour period on one day.

An environmental analysis was performed during the marine event permit process for the swimming event and a checklist and a categorical exclusion determination are not required for this special local regulation.

List of Subjects in 33 CFR Part 100

Marine safety, Navigation (water), Reporting and recordkeeping requirements, Waterways.

For the reasons discussed in the preamble, the U.S. Coast Guard amends 33 CFR part 100 as follows:

PART 100—SAFETY OF LIFE ON NAVIGABLE WATERS

■ 1. The authority citation for Part 100 continues to read as follows:

Authority: 33 U.S.C. 1233.

■ 2. A new temporary § 100.T08–0277 is added to read as follows:

§ 100.T08–0277_Special Local Regulation; Tennessee River, Miles 256.0 to 257.5, Florence, TN.

(a) *Location.* The following area is a regulated area: All waters of the Tennessee River, beginning at mile marker 256.0 and ending at mile marker 257.5.

(b) *Effective date.* This section is effective from 5:00 a.m. to 10:30 a.m. on July 13, 2014.

(c) *Regulations.* (1) In accordance with the general regulations in § 100.35 of this part, entry into this area is prohibited unless authorized by the Captain of the Port Ohio Valley or a designated representative.

(2) Persons or vessels requiring entry into or passage through the area must request permission from the Captain of the Port Ohio Valley or a designated representative. U.S. Coast Guard Sector Ohio Valley may be contacted on VHF Channel 13 or 16, or at 1–800–253–7465.

(3) All persons and vessels shall comply with the instructions of the Captain of the Port Ohio Valley and designated U.S. Coast Guard patrol personnel. On-scene U.S. Coast Guard patrol personnel include commissioned, warrant, and petty officers of the U.S. Coast Guard.

(d) *Informational broadcasts.* The Captain of the Port Ohio Valley or a designated representative will inform the public through broadcast notice to mariners when the special local regulation is being enforced and if there are changes to the planned schedule and enforcement period for this special local regulation.

Dated: June 18, 2014.

R. V. Timme,

Captain, U.S. Coast Guard, Captain of the Port Ohio Valley.

[FR Doc. 2014–16156 Filed 7–10–14; 8:45 am]

BILLING CODE 9110–04–P

DEPARTMENT OF HOMELAND SECURITY

Coast Guard

33 CFR Part 100

[Docket No. USCG–2014–0331]

RIN 1625–AA08

Eighth Coast Guard District Annual Special Local Regulation; Music City Triathlon; Cumberland River 190.0–192.0; Nashville, TN

AGENCY: Coast Guard, DHS.

ACTION: Notice of enforcement of regulation.

SUMMARY: The Coast Guard will enforce a Special Local Regulation for the ''Music City Triathlon'' on the Cumberland River mile marker 190.0 to mile marker 192.0 from 6:00 a.m. until 9:30 a.m. on July 27, 2014. This action is necessary for the safeguard of participants and spectators, including all crews, vessels, and persons on navigable waters during the ''Music City Triathlon.'' During the enforcement period, entry into, transiting or anchoring in the Regulated Area is prohibited to all vessels not registered with the sponsor as participants or official patrol vessels, unless specifically authorized by the Captain of the Port (COTP) Ohio Valley or a designated representative.

DATES: The regulations in 33 CFR 100.801 will be enforced from 6:00 a.m. until 9:30 a.m. on July 27, 2014.

FOR FURTHER INFORMATION CONTACT: If you have questions on this notice of enforcement, call Petty Officer Chad

Phillips, Coast Guard Marine Safety Detachment Nashville at 615–736–5421, or *Chad.e.phillips@uscg.mil.*

SUPPLEMENTARY INFORMATION: The Coast Guard will enforce the Special Local Regulation for the annual ''Music City Triathlon'' listed in 33 CFR 100.801 Table 1, Sector Ohio Valley, No. 16 on July 27, 2014 from 6:00 a.m. until 9:30 a.m.

Under the provisions of 33 CFR 100.801, entry into the regulated area listed in Table 1, Sector Ohio Valley, No. 16 is prohibited unless authorized by the Captain of the Port or a designated representative. Persons or vessels desiring to enter into or passage through the Special Local Regulation must request permission from the Captain of the Port or a designated representative. If permission is granted, all persons and vessels shall comply with the instructions of the Captain of the Port or designated representative.

This notice is issued under authority of 5 U.S.C. 552(a), and 33 U.S.C. 1233. In addition to this notice in the **Federal Register**, the Coast Guard will provide the maritime community with advance notification of this enforcement period via Local Notice to Mariners and Marine Information Broadcasts.

If the Captain of the Port Ohio Valley or Patrol Commander determines that the Special Local Regulation need not be enforced for the full duration stated in this notice of enforcement, he or she may use a Broadcast Notice to Mariners to grant general permission to enter the regulated area.

Dated: June 6, 2014.

R. V. Timme,

Captain, U.S. Coast Guard, Captain of the Port Ohio Valley.

[FR Doc. 2014–16157 Filed 7–10–14; 8:45 am]

BILLING CODE 9110–04–P

DEPARTMENT OF HOMELAND SECURITY

Coast Guard

33 CFR Part 117

[Docket No. USCG–2014–0525]

Drawbridge Operation Regulation; Lake Washington Ship Canal, Seattle, WA

AGENCY: Coast Guard, DHS.

ACTION: Notice of deviation from drawbridge regulation.

SUMMARY: The Coast Guard has issued a temporary deviation from the operating schedule that governs the University Bridge, mile 4.3, across Lake Washington Ship Canal at Seattle, WA. The deviation is necessary to allow King County Metro Transit to perform essential maintenance on the University Bridge. This deviation allows the bridges to remain in the closed position and need not open to marine traffic.

DATES: This deviation is effective from 10 p.m. on July 11, 2014 to 8 a.m. on July 20, 2014.

ADDRESSES: The docket for this deviation, [USCG–2014–0525] is available at *http://www.regulations.gov.* Type the docket number in the ''SEARCH'' box and click ''SEARCH.'' Click on Open Docket Folder on the line associated with this deviation. You may also visit the Docket Management Facility in Room W12–140 on the ground floor of the Department of Transportation West Building, 1200 New Jersey Avenue SE., Washington, DC 20590, between 9 a.m. and 5 p.m., Monday through Friday, except Federal holidays.

FOR FURTHER INFORMATION CONTACT: If you have questions on this temporary deviation, call or email Mr. Steven Fischer, Bridge Administrator, Thirteenth Coast Guard District; telephone 206–220–7282, email *Steven.M.Fischer3@uscg.mil.* If you have questions on viewing the docket, call Cheryl Collins, Program Manager, Docket Operations, telephone 202–366–9826.

SUPPLEMENTARY INFORMATION: The Seattle Department of Transportation has requested a temporary deviation from the operating schedule for the University Bridge, mile 4.3, across the Lake Washington Ship Canal at Seattle, WA. The requested deviation is to allow King County Metro Transit to perform essential maintenance on the University Bridge. The plan is to re-cable all the metro trolley lines on the bridge. To facilitate this maintenance period, the draws of the bridge will be maintained in the closed-to-navigation position on July 11th, 12th, and 13th, 2014 from 10 p.m. to 8 a.m. the following morning, then again on the 18th, 19th, and 20th, 2014 from 10 p.m. to 8 a.m. the following morning. Vessels which do not require bridge openings may continue to transit beneath the bridge during the closure periods. The University Bridge, mile 4.3, provides a vertical clearance of 30 feet in the closed position; clearances are referenced to the mean water elevation of Lake Washington. The current operating schedule for the bridge is set out in 33 CFR 117.1051. The normal operating schedule for the University Bridge states that the bridge need not open from 7 a.m. to 9 a.m. and from 4 p.m. to 6 p.m. Monday through Friday for vessels less than 1000 tons. The normal operating schedule for the bridge also requires one hour advance notification for bridge openings between 11 p.m. and 7 a.m. daily. Waterway usage on the Lake Washington Ship Canal ranges from commercial tug and barge to small pleasure craft. Vessels able to pass through the bridge in the closed positions may do so at anytime. The bridge will not be able to open for emergencies and there is no immediate alternate route for vessels to pass. The Coast Guard will also inform the users of the waterways through our Local and Broadcast Notices to Mariners of the change in operating schedule for the bridge so that vessels can arrange their transits to minimize any impact caused by the temporary deviation.

In accordance with 33 CFR 117.35(e), the drawbridge must return to its regular operating schedule immediately at the end of the designated time period. This deviation from the operating regulations is authorized under 33 CFR 117.35.

Dated: June 25, 2014.

Steven M. Fischer,

Bridge Administrator, Thirteenth Coast Guard District.

[FR Doc. 2014–16159 Filed 7–10–14; 8:45 am]

BILLING CODE 9110–04–P

ENVIRONMENTAL PROTECTION AGENCY

40 CFR Part 168

[EPA–HQ–OPP–2009–0607; FRL–9913–18]

RIN 2070–AJ53

Withdrawal of Labeling of Pesticide Products and Devices for Export

AGENCY: Environmental Protection Agency (EPA).

ACTION: Withdrawal of direct final rule.

SUMMARY: In the **Federal Register** of April 30, 2014, EPA published a direct final rule amending the regulations that pertain to the labeling of pesticide products and devices intended solely for export. In accordance with the procedures described in the April 30, 2014 **Federal Register** document, EPA is withdrawing the direct final rule, because the Agency received adverse comments.

DATES: Effective July 11, 2014 the rule published in the **Federal Register** of April 30, 2014 (79 FR 24347) (FRL–9909–82) is withdrawn.

FOR FURTHER INFORMATION CONTACT: Kathryn Boyle, Field and External Affairs Division (7506P), Office of

Pesticide Programs, Environmental Protection Agency, 1200 Pennsylvania Ave. NW., Washington, DC 20460–0001; telephone number: (703) 305–6304; email address: *boyle.kathryn@epa.gov.*

SUPPLEMENTARY INFORMATION:

I. Does this action apply to me?

A list of potentially affected entities is provided in the April 30, 2014 **Federal Register** document. If you have questions regarding the applicability of this action to a particular entity, consult the person listed under **FOR FURTHER INFORMATION CONTACT**.

II. What rule is being withdrawn?

In the April 30, 2014 **Federal Register** document, EPA amended the labeling regulations for pesticide products and devices intended solely for export to allow placement of required information on collateral labeling attached to a shipping container of such products rather than on the label of each individual product in such a shipment by direct final rule. In accordance with the procedures described in the April 30, 2014 **Federal Register** document, EPA is withdrawing the direct final rule, because the Agency received adverse comments, copies of which are available in the docket. Elsewhere in this **Federal Register**, EPA is proposing a rule to seek public comment on the labeling regulations and the issues raised by the adverse comments received.

III. How do I access the docket?

To access the docket, please go to *http://www.regulations.gov* and follow the online instructions using the docket ID number EPA–HQ–OPP–2009–0607. Additional information about the Docket Facility is also provided under **ADDRESSES** in the April 30, 2014 **Federal Register** document. If you have questions, consult the person listed under **FOR FURTHER INFORMATION CONTACT.**

IV. Good Cause Finding

EPA finds that there is ''good cause'' under the Administrative Procedure Act (APA) (5 U.S.C. 553(b)(3)(B)) to withdraw the rule discussed in this document without prior notice and comment. For this document, notice and comment is impracticable and unnecessary because EPA is under a time limit to publish this withdrawal. It was determined that this document is not subject to the 30-day delay of effective date generally required by 5 U.S.C. 553(d). This withdrawal must become effective prior to the effective date of the rule being withdrawn.

V. Statutory and Executive Order Reviews

This document withdraws regulatory requirements that have not gone into effect. As such, the Agency has determined that this withdrawal will not have any adverse impacts, economic or otherwise. The statutory and Executive Order review requirements applicable to the rule being withdrawn were discussed in the April 30, 2014 **Federal Register** document. Those review requirements do not apply to this action because it is a withdrawal and does not contain any new or amended requirements.

VI. Congressional Review Act (CRA)

Pursuant to the CRA (5 U.S.C. 801 *et seq.*), EPA will submit a report containing this rule and other required information to the U.S. Senate, the U.S. House of Representatives, and the Comptroller General of the United States prior to publication of the rule in the **Federal Register**. This action is not a ''major rule'' as defined by 5 U.S.C. 804(2). Section 808 of the CRA allows the issuing agency to make a rule effective sooner than otherwise provided by CRA if the agency makes a good cause finding that notice and public procedure is impracticable, unnecessary, or contrary to the public interest. As required by 5 U.S.C. 808(2), this determination is supported by a brief statement in Unit IV.

List of Subjects in 40 CFR Part 168

Environmental protection, Administrative practice and procedure, Advertising, Labeling, Pesticides and pests, Reporting and recordkeeping requirements.

Dated: July 3, 2014.

James Jones,

Assistant Administrator, Office of Chemical Safety and Pollution Prevention.

[FR Doc. 2014–16275 Filed 7–10–14; 8:45 am]

BILLING CODE 6560–50–P

FEDERAL COMMUNICATIONS COMMISSION

47 CFR Part 2

[ET Docket Nos. 10–236 and 06–155; FCC 13–15]

Radio Experimentation and Market Trials—Streamlining Rules

AGENCY: Federal Communications Commission.

ACTION: Final rules; announcement of effective date.

SUMMARY: In this document, the Commission announces that the Office of Management and Budget (OMB) has approved, for a period of three years, the information collection requirements contained in the regulations in the Radio Experimentation and Market Trials—Streamlining Rules. The information collection requirements were approved on June 9, 2014 by OMB.

DATES: The amendments to 47 CFR 2.803(c)(2), published at 78 FR 25138, April 29, 2013, are effective July 11, 2014.

FOR FURTHER INFORMATION CONTACT: For additional information contact Nancy Brooks on (202) 418–2454 or via email to: *Nancy.Brooks@fcc.gov*.

SUPPLEMENTARY INFORMATION: This document announces that on June 9, 2014, OMB approved, for a period of three years, the information collection requirements contained in 47 CFR 2.803(c)(2). The Commission publishes this document to announce the effective date of this rule section. See, In the Matter of Promoting Expanded Opportunities for Radio Experimentation and Market Trials under Part 5 of the Commission's Rules and Streamlining Other Related Rules, ET Docket No. 10–236; and 2006 Biennial Review of Telecommunications Regulations—Part 2 Administered by the Office of Engineering and Technology ET Docket Nos. 06–155, FCC 13–15, 78 FR 25138, April 29, 2013.

Synopsis

As required by the Paperwork Reduction Act of 1995, (44 U.S.C. 3507), the Commission is notifying the public that it received OMB approval on June 9, 2014, for the information collection requirement contained in 47 CFR 2.803(c)(2). Under 5 CFR 1320, an agency may not conduct or sponsor a collection of information unless it displays a current, valid OMB Control Number.

No person shall be subject to any penalty for failing to comply with a collection of information subject to the Paperwork Reduction Act that does not display a valid OMB Control Number.

The OMB Control Number is 3060–0773 and the total annual reporting burdens for respondents for this information collection are as follows:

OMB Control Number: 3060–0773.

OMB Approval Date: 6/9/2014.

OMB Expiration Date: 6/30/2017.

Title: Section 2.803 Marketing of RF Devices Prior to Equipment Authorization.

Form Number: Not applicable.

Type of Review: Revision of a currently approved collection.

Respondents: Businesses or other for-profit.

Number of Respondents: 10,000 respondents; 10,000 responses.

Estimated Time per Response: 0.5 hours.

Frequency of Response: One time reporting requirement and third party disclosure requirement.

Obligation to Respond: Required to obtain or retain benefits. Statutory authority for this information collection is contained in 47 U.S.C. 154(i), 302, 303, 303(r), and 307.

Total Annual Burden: 5,000 hours.

Total Annual Costs: N/A.

Nature and Extent of Confidentiality: There is no need for confidentiality.

Privacy Act Impact Assessment: N/A.

Needs and Uses: On January 31, 2013, the Commission adopted a Report and Order, ET Docket Nos. 10–236 and 06–155, FCC 13–15, which revised the rules in § 2.803(c)(2) to include limited marketing activities prior to equipment authorization.

The Commission has established rules for the marketing of radio frequency (RF) devices prior to equipment authorization under guidelines in 47 CFR 2.803. The general guidelines in § 2.803 prohibit the marketing or sale of such equipment prior to a demonstration of compliance with the applicable equipment authorization and technical requirements in the case of a device subject to verification or Declaration of Conformity without special notification. Section 2.803(c)(2) permits limited marketing activities prior to equipment authorization, for devices that could be authorized under the current rules; could be authorized under waivers of such rules that are in effect at the time of marketing; or could be authorized under rules that have been adopted by the Commission but that have not yet become effective. These devices may be not operated unless permitted by § 2.805.

The following general guidelines apply for third party notifications: (a) A RF device may be advertised and displayed at a trade show or exhibition prior to a demonstration of compliance with the applicable technical standards and compliance with the applicable equipment authorization procedure provided the advertising and display is accompanied by a conspicuous notice specified in §§ 2.803(c)*(2)(iii)(A) or 2.803(c)(2)(iii)(B).*

(b) An offer for sale solely to business, commercial, industrial, scientific, or medical users of an RF device in the conceptual, developmental, design or pre-production stage prior to demonstration of compliance with the equipment authorization regulations may be permitted provided that the prospective buyer is advised in writing at the time of the offer for sale that the equipment is subject to FCC rules and that the equipment will comply with the appropriate rules before delivery to the buyer or centers of distribution.

(c) Equipment sold as evaluation kit may be sold to specific users with notice specified in § 2.803(c)(2)(iv)(B).

The information to be disclosed about marketing of the RF device is intended:

(1) To ensure the compliance of the proposed equipment with Commission rules; and

(2) To assist industry efforts to introduce new products to the marketplace more promptly.

The information disclosure applies to a variety of RF devices that:

(1) Is pending equipment authorization or verification of compliance;

(2) May be manufactured in the future;

(3) May be sold as kits; and

(4) Operates under varying technical standards.

The information disclosed is essential to ensuring that interference to radio communications is controlled.

Federal Communications Commission.

Marlene H. Dortch,

Secretary.

[FR Doc. 2014–15877 Filed 7–10–14; 8:45 am]

BILLING CODE 6712–01–P

FEDERAL COMMUNICATIONS COMMISSION

47 CFR Part 20

[WT Docket No. 12–269; Docket No. 12–268; FCC 14–63]

Policies Regarding Mobile Spectrum Holdings; Expanding the Economic and Innovation Opportunities of Spectrum Through Incentive Auctions

AGENCY: Federal Communications Commission.

ACTION: Final rule.

SUMMARY: In this document, the Federal Communications Commission (Commission) updates its initial screen for review of spectrum acquisitions through secondary markets and makes determinations regarding whether to establish mobile spectrum holding limits for its upcoming auctions of high- and low-band spectrum, in light of the growing demand for spectrum, the differences between spectrum bands, and in accordance with its desire to preserve and promote competition.

DATES: Effective September 9, 2014.

FOR FURTHER INFORMATION CONTACT: Daniel Ball, Wireless Telecommunications Bureau, (202) 418–1577, email *Daniel.Ball@fcc.gov*; Amy Brett, Wireless Telecommunications Bureau (202) 418–2703, email *Amy.Brett@fcc.gov.*

SUPPLEMENTARY INFORMATION: This is a summary of the Commission's Report and Order (*R&O*), WT Docket No. 12–269; Docket No. 12–268; FCC 14–63, adopted May 15, 2014 and released June 2, 2014. The full text of this document is available for inspection and copying during business hours in the FCC Reference Information Center, Portals II, 445 12th Street SW., Room CY–A257, Washington, DC 20554. Also, it may be purchased from the Commission's duplicating contractor at Portals II, 445 12th Street SW., Room CY–B402, Washington, DC 20554; the contractor's Web site, *http://www.bcpiweb.com*; or by calling (800) 378–3160, facsimile (202) 488–5563, or email *FCC@BCPIWEB.com*. Copies of the *R&O* also may be obtained via the Commission's Electronic Comment Filing System (ECFS) by entering the docket number WT Docket No. 12–269. Additionally, the complete item is available on the Federal Communications Commission's Web site at *http://www.fcc.gov*.

1. In the *R&O* the Commission updates its spectrum screen for its competitive review of proposed secondary market transactions to reflect current suitability and availability of spectrum for mobile wireless services. It adds to its spectrum screen: 40 megahertz of AWS–4; 10 megahertz of H Block; 65 megahertz of AWS–3 (when it becomes available on a market-by-market basis); 12 megahertz of BRS; 89 megahertz of EBS; and the total amount of 600 MHz spectrum auctioned in the Incentive Auction. It subtract from its spectrum screen: 12.5 megahertz of SMR; and 10 megahertz that was the Upper 700 MHz D Block. The Commission establishes a market-based spectrum reserve of up to 30 megahertz in the Incentive Auction in each license area to ensure against excessive concentration in holdings of low-band spectrum and ensuring that all bidders bear a fair share of the cost of the Incentive Auction. It adopts limits on secondary market transactions of 600 MHz spectrum licenses for six years post-auction. It declines to adopt auction-specific limits for AWS–3. It treats certain further concentrations of below-1-GHz spectrum as an enhanced factor in its case-by-case analysis of the potential competitive harms posed by individual transactions.

I. Preserving and Promoting Competition in the Mobile Wireless Marketplace

2. The Commission has long recognized that ''spectrum is an input in CMRS markets,'' and that ''the state of control over the spectrum input is a relevant factor'' in its competitive analysis. Ensuring that sufficient spectrum is available for multiple existing mobile service providers as well as potential entrants is crucial to promoting consumer choice and competition throughout the country, including in rural areas, and is similarly crucial to fostering innovation in the marketplace. For these reasons, Congress directed the Commission to proactively ''include safeguards to protect the public interest'' when specifying the classes and characteristics of licenses and permits to be issued by competitive bidding, and to ''promot[e] economic opportunity and competition and ensur[e] that new and innovative technologies are readily accessible to the American people by avoiding excessive concentration of licenses[.]'' In order for there to be robust competition, multiple competing service providers must have access to or hold sufficient spectrum to be able to enter a marketplace or expand output rapidly in response to any price increase or reduction in quality, or other change that would harm consumer welfare. Consistent with the Commission's statutory mandate, the fundamental goal that has guided its policies regarding mobile spectrum holdings has been the preservation and promotion of competition, which in turn, enables consumers to make choices among numerous service providers and leads to lower prices, improved quality, and increased innovation.

3. Since the Commission's last comprehensive review of its mobile spectrum holdings policies more than a decade ago, the marketplace for mobile wireless services has evolved significantly—both in consumer demand for services and market structure—as has the role of low-band spectrum for coverage purposes and high-band spectrum for capacity purposes in the deployment of providers' networks. As providers deploy next-generation mobile networks, the engineering properties and deployment capabilities of the mix of particular spectrum bands in providers' holdings have become increasingly important, particularly as multi-band phones allow users to take advantage of the different properties of different spectrum bands. Moreover, while the mobile wireless marketplace a decade ago consisted of six near-nationwide providers and a substantial number of regional and small providers, since then, there has been a significant degree of consolidation resulting in a market with four nationwide providers and a smaller number of regional and more local service providers.

4. Reflecting this evolution in the mobile wireless marketplace, the Commission, in recent years, has considered in more detail the technical distinctions among spectrum bands used to deploy next-generation mobile networks. The Commission adopted mobile spectrum holdings policies in this rulemaking that address how the differences among spectrum bands may affect its overall competitive analysis of spectrum acquisitions and therefore its decision making for both auctions and secondary market transactions.

5. In adopting these policies, the Commission is mindful that the statutory framework established by Congress for mobile wireless services and implemented by the Commission, with its reliance on competition as the primary driver of consumer benefits, has fostered substantial economic growth and consumer benefits for its nation. Among other goals, Congress has directed us as well to promote the ''efficient and intensive use of the electromagnetic spectrum'' and avoid an ''excessive concentration of licenses'' in the design of systems of competitive bidding, as well as to review transactions to ensure that they serve the public interest.

6. Consistent with the evolution of the marketplace and the Commission's statutory directives and policy goals, and in light of the evolution of wireless services demanded by consumers, the Commission must ensure that multiple service providers have access to spectrum in the foreseeable future. Existing marketplace conditions, including concerns about the potential for anticompetitive behavior, inform its predictive judgment but are not determinative as to whether the Commission needs to act. The mobile spectrum holdings policies the Commission adopted are necessary to preserve and promote consumer choice and competition among multiple service providers, promote the efficient and intensive use of spectrum, maximize economic opportunity, and foster the deployment of innovative technologies.

A. Evolution of the Mobile Wireless Marketplace

7. During the past decade, provider supply and consumer demand for wireless services has exploded, moving from the provision of mobile voice services to the provision of mobile broadband services. The rapid adoption of smartphones, tablet computers, mobile applications, and increasing deployment of high-speed 3G and now 4G technologies, is driving significantly more intensive use of mobile networks. In 2013, a single smartphone generated 48 times more mobile data traffic than a feature phone, and average smartphone usage grew 50 percent in 2013. The adoption of smartphones increased from 27 percent to 54 percent of U.S. subscribers from December 2010 to December 2012. Consequently, service providers generally need access to more spectrum to meet the increasing demand for mobile broadband, which consumes far greater amounts of bandwidth than did mobile phones just a short time ago.

8. The wireless industry has also undergone significant consolidation during the past decade. In 2003, there were six nationwide facilities-based wireless service providers: AT&T Wireless, Sprint PCS, Verizon Wireless, T-Mobile, Cingular Wireless, and Nextel. Now there are four—Verizon Wireless, AT&T, Sprint, and T-Mobile. In addition, there have been several significant spectrum-only transactions, such as *AT&T-Qualcomm* (2011), *Verizon Wireless-SpectrumCo* (2012), and *AT&T WCS* (2012) that have resulted in increased spectrum aggregation among the remaining providers.

9. Concentration in the market share of the major providers has also increased during that time period. As of December 2003, the top six facilities-based nationwide providers accounted for approximately 79 percent of total mobile wireless subscribers in the country. By December 2013, the top four facilities-based nationwide providers had increased their combined market share to 97 percent of all subscribers. Verizon Wireless and AT&T together accounted for 68 percent of the nation's subscribers as of year-end 2013, compared to 51 percent in 2004. Some regional and local service providers have achieved significant market shares within particular local markets, often the most rural markets, but they typically rely on roaming agreements with nationwide facilities-based providers to extend the geographic reach of their networks.

10. The Commission has ''ample latitude to adapt its rules and policies to the demands of changing circumstances.'' In light of these trends and current spectrum aggregations, the Commission must examine whether changes in its mobile spectrum holdings policies are necessary to facilitate the

robust competition that leads to lower prices, improved quality, and greater innovation. The following are some of the benefits of competition: Service providers have offered various pricing plans, ranging from tiered usage-based data pricing with overage charges (Verizon Wireless, AT&T) to unlimited data pricing (Sprint), and in 2012, both Verizon Wireless and AT&T launched shared data plans for smartphones and other mobile data devices, and T-Mobile reintroduced an unlimited smartphone data pricing option.

B. Ensuring That All Americans Benefit From Mobile Wireless Competition

11. Based upon the record before us, the Commission finds that the spectrum aggregation limits the Commission adopted is needed to advance its statutory objectives under section 309(j), to promote competition, and to avoid competitive harms. The Commission's competition-related decision making is designed to advance the public interest by preserving and promoting competition that benefits consumers and the Commission must consider the totality of the circumstances and choose policies that are most likely to allow competition to flourish for the public benefit. Accordingly, the Commission recognizes the important tradeoffs in the policy decision at hand. Policies that would limit the ability of major providers to acquire additional spectrum licenses may limit their ability to provide new services or serve new customers. At the same time, policies that would allow these service providers to acquire all or substantially all of the spectrum licenses to be auctioned in the near future, particularly spectrum licenses being auctioned in the Incentive Auction, or that would allow further concentration in below-1-GHz spectrum in secondary market transactions without enhanced scrutiny, would raise significant competitive issues.

12. *Raising Rivals' Costs and Foreclosure.* In 2001, the Commission recognized that ''it is at least a threshold possibility that because the supply of suitable spectrum is limited, firms in CMRS markets might choose to overinvest in spectrum in order to deter entry, depending on the costs of doing so.'' In certain situations, a dominant firm may raise rivals' costs by a variety of means, including input monopolization. As rivals' costs are raised, the competiveness of the marketplace is likely to diminish. Foreclosure can occur when competitors have an incentive and ability to acquire an input not only to put it to their own use, but also to withhold it from their rivals.

13. Discussion. In its review of the evolution of the mobile wireless marketplace, its current state, and the potential future effects on consumers, the Commission is required to consider a number of concerns to advance the public interest. Section 309(j) requires the Commission to balance a number of specific statutory objectives including competition, diversity and the avoidance of excessive concentration in designing its rules regarding spectrum licenses and the competitive bidding assignment process. The Commission finds that, under the totality of circumstances, the public interest will be advanced by: Reaffirming the current case-by-case review of proposed transactions, with continued use of a spectrum screen triggered at aggregations of approximately one third or more of the spectrum suitable and available for mobile telephony/broadband; updating the spectrum screen to include spectrum currently suitable and available for mobile telephony/broadband; treating certain levels of increased aggregations of below-1-GHz spectrum as an enhanced factor during case-by-case review of secondary market transactions involving below-1-GHz spectrum; and establishing a market-based spectrum reserve in the upcoming 600 MHz auction.

14. There are three independent bases for its conclusion, each of which the Commission finds warrants the policies the Commission adopted: (1) The importance of access to low-band spectrum to promote variety in licensees and the advancement of rural deployment as directed by Section 309(j), (2) the benefits to consumers associated with robust competition among multiple providers having access to low-band spectrum, and (3) the potential for competitive harm if the Commission does not provide safeguards to mitigate against the possibility of providers raising rivals' costs or foreclosing competition by denying competitors access to low-band spectrum.

15. Its findings are compelled by the changing circumstances posed by the marketplace today: Increased consolidation, the growth in demand for mobile broadband, and the significance of the upcoming 600 MHz auction. First, the Commission recognizes that the mobile wireless marketplace has undergone considerable consolidation, both in terms of number of firms and relative market shares, as well as increased concentration of low-band spectrum. Recent acquisitions have exacerbated this concentration. While limited amounts of low-band spectrum might theoretically be acquired in secondary market transactions, the vast bulk of that spectrum has already been acquired. There is also significantly less low-band spectrum than there is high-band spectrum: after its decisions, there will be 134 megahertz of spectrum below 1 GHz suitable and available for the provision of mobile broadband services and 446.5 megahertz of suitable and available spectrum above 1 GHz. Concentration in spectrum holdings by service providers of low-band spectrum has become particularly pronounced, with Verizon Wireless and AT&T together having aggregated more than 90 percent of all cellular spectrum. In addition, these two service providers together currently hold approximately 72 percent of 700 MHz spectrum. By comparison, variation in spectrum holdings of higher-frequency spectrum in the range of 1 to 2 GHz is more evenly distributed: Of the PCS spectrum, Verizon Wireless holds 16 percent, AT&T holds 29 percent, Sprint holds 28 percent and T-Mobile holds 22 percent; of the AWS–1 spectrum, Verizon Wireless holds 37 percent, AT&T holds 13 percent, and T-Mobile holds 42 percent.

16. Second, its findings are informed by the skyrocketing consumer demand for mobile broadband. Today, consumers are demanding more data at higher speeds, while at home, at work, and in transit. The Commission finds that to provide sufficient level of service in the marketplace to the benefit of consumers, providers will need to deploy more spectrum that can provide both coverage and in-building penetration, as well as spectrum that can provide the increased throughput for mobile broadband applications

17. Third, its findings are based on the recognition that the 600 MHz spectrum that will be made available in the Incentive Auction will be the last offering of a significant amount of nationwide greenfield low-band spectrum for the foreseeable future. This is particularly important because of the very different characteristics of low-band spectrum. There is a large frequency gap between the below-1-GHz spectrum (in the 700 and 800 MHz bands now largely held by the leading providers and the 600 MHz Incentive Auction spectrum) and the remaining spectrum currently suitable and available for mobile broadband use, beginning with the AWS–1 band at 1710 MHz. Low-band spectrum possesses distinct propagation advantages for network deployment, particularly in rural areas and indoors. As a result, the auction of spectrum below 1 GHz

presents a once-in-a-generation opportunity to promote competition as specifically required by section 309(j). Based upon current trends in consumer demand for mobile broadband services, the Commission concludes that the decisions the Commission makes here will have a significant impact on the extent to which competition may flourish for years to come.

18. Though there is substantial support in the record for distinguishing between low-band and high-band spectrum based on propagation characteristics, as discussed above, the Commission finds that the record does not support such categorical distinctions between three different spectrum groupings—below-1-GHz, 1–2.2 GHz, and 2.3–2.7 GHz—as recently advocated by Sprint.

19. *Variety of Licensees and Rural Deployment.* Under Section 309(j), Congress mandated that the Commission designs auctions to ''include safeguards to protect the public interest in the use of the spectrum,'' including the objectives to disseminate licenses ''among a wide variety of applicants'' and to promote deployment of new technologies, products, and services to ''those residing in rural areas.'' The limited restrictions the Commission imposes on spectrum holdings will promote both of these statutory policies. A variety of licensees is particularly important in light of the lack of competitive offerings in rural America today.

20. Increasing the number of providers who have access to low-band spectrum can increase the competitive offerings of mobile wireless service for consumers, particularly in rural areas. Two nationwide providers control the vast majority of low-band spectrum, and this disparity makes it difficult for rural consumers to have access to the competition and choice that would be available if more wireless competitors also had access to low-band spectrum. Low-band spectrum, given its unique propagation characteristics, can serve as a foundation for expansion of an existing network or a new or upcoming service providers' network deployment as it builds a customer base to support further growth. The Commission finds that its spectrum holdings policies will promote variety in licensees and deployment of new technologies to those residing in rural areas.

21. The Commission believes that holding a mix of spectrum bands is advantageous to providers and that consumer's benefit when multiple providers have access to a mix of spectrum bands which in turn can increase competition, drive down prices, and ensure continued innovation and investment. Accordingly, the Commission finds its public interest goal of promoting consumer welfare would be advanced by the policies the Commission adopted.

22. *Potential for Competitive Harm From Increased Aggregation of Spectrum.* The Commission also finds that in the absence of additional below-1-GHz spectrum on a nationwide basis, there is a substantial likelihood of competitive harm if providers that currently lack sufficient access to such spectrum cannot acquire it. Under section 309(j), the Commission has mandates to promote competition, promote efficient use of spectrum, and avoid the excessive concentration of licenses. Low-band spectrum is less costly to deploy and provides higher coverage quality and the leading providers have most of the low-band spectrum available today. If they were to acquire all or substantially all of the remaining low-band spectrum, they would benefit independently of any deployment of this newly acquired spectrum to the extent that their rivals are denied its use. Without access to this low-band spectrum, their rivals would be less able to provide a competitive alternative.

23. Along with an attenuated ability to increase output or service quality in response to price increases, providers that lack access to low-band spectrum may lack the ability quickly to expand coverage or provide new or innovative services, which would have a significant impact on competition in the mobile wireless marketplace. The Commission agrees that a service provider that is limited to high-band spectrum holdings would face challenges to provide services as robust as those offered by providers holding a mix of low- and high-band spectrum. The consumer harms from the raising of rivals' costs from increased concentration of low-band spectrum outweigh the potential benefits of unlimited spectrum aggregation. Accordingly, the Commission finds that the limited restrictions the Commission adopted will reasonably balance its goals of promoting competition, ensuring the efficient use of spectrum, and avoiding an excessive concentration of licenses in accord with section 309(j).

24. *Foreclosure.* The Commission agrees with DOJ, today's mobile wireless marketplace is characterized by factors that, according to DOJ, increase the potential for anticompetitive conduct, including high market concentration, highly concentrated holdings of low-band spectrum, high margins, and high barriers to entry. These risk factors increase the incentive and ability for a provider with low-band spectrum to bid for the spectrum in an attempt to stifle competition that may arise if multiple licensees were to hold low frequency spectrum. As a result, such a provider might be the highest bidder in a spectrum auction, not because it will put the spectrum to its highest use, but because it is motivated to engage in a foreclosure strategy. In light of this risk and balancing the inherent tradeoffs, the Commission finds that the limited restrictions the Commission enacted is a reasonable balance of the Section 309(j) and public interest factors that form its statutory mandate, including the goals to promote competition, disseminate licenses among a wide variety of applicants, ensure high quality service to those in rural areas and avoid the excessive concentration of licenses, while also promoting the efficient and intensive use of the spectrum.

C. Conclusion

25. For the reasons set forth above, spectrum is a limited and essential input for the provision of mobile wireless telephony and broadband services, and ensuring access to, and the availability of, sufficient spectrum is critical to promoting the competition that drives innovation and investment. The Communications Act has long required the Commission to examine closely the impact of spectrum aggregation on competition, innovation, and the efficient use of spectrum to ensure that spectrum is allocated and assigned in a manner that serves the public interest, convenience and necessity, and avoids the excessive concentration of licenses. In recent years, the Commission has considered in more detail and largely in the context of its case-by-case analysis of secondary market transactions how distinctions among spectrum bands affect competition in the provision of next-generation mobile broadband services.

26. In today's marketplace, in many service areas currently suitable and available below-1-GHz spectrum is disproportionately concentrated in the hands of larger nationwide service providers: The two largest providers hold 73 percent of the low-band spectrum. Particularly in the context of the once-in-a-generation Incentive Auction, the Commission finds that there is a reasonably foreseeable risk of not achieving its various section 309(j) goals whether or not leading providers are motivated by foreclosure strategies. The Commission concludes that if the Commission do not act at this time to ensure the highest use of low-band spectrum, the competitive choices

available to wireless consumers will likely be substantially less attractive. The Commission therefore finds it essential to establish clear and transparent policies that will preserve and promote competition in the future, promote the efficient use of spectrum, ensure competitive mobile broadband service in rural areas, and avoid an excessive concentration of licenses. The Commission finds that excessive concentration in the allocation of relatively scarce below-1-GHz spectrum, given ever increasing consumer demand for more bandwidth-intensive services, would substantially harm the public interest and indeed, would create a significant risk in the future of an insufficient number of service providers with a network capable of satisfying consumer demand.

27. The Commission finds that the promotion of competition, variety of licensees, rural coverage, and consumer choice in the mobile marketplace, as well as in the future, crucially depends upon multiple providers having access to the low-band spectrum they need to operate and vigorously compete. The Commission also finds that the Commission must consider the potential for anticompetitive results if the concentrated holdings of below-1-GHz spectrum are not addressed. The Commission cannot ignore the possibility of diminished competition in the future, both from rivals' costs being raised and from foreclosure. Further, the Commission finds that the burden that some providers may experience by limits on their ability to acquire increasing amounts of below-1-GHz spectrum, when tailored to the minimum the Commission believed necessary to promote competition, will be outweighed by the public interest benefits that will flow from the preservation and promotion of robust and sustainable competition. By adopting clear and transparent spectrum aggregation limits, the Commission aim to ensure that American consumers have meaningful choices among multiple service providers in the future.

II. Changes to the Spectrum Screen

28. The Commission retains the current standard for whether particular bands should be included in the spectrum screen—''suitable'' and ''available'' in the near term for the provision of mobile telephony/broadband services. The Commission determines that the following spectrum should be added to the spectrum screen: The 600 MHz band (at the conclusion of the Incentive Auction), Advanced Wireless Services in the 2000–2020 MHz and 2180–2200 MHz spectrum bands (AWS–4), H Block, additional BRS spectrum, the majority of the EBS spectrum, and the AWS–3 band (on a market-by-market basis as it becomes ''available''). The Commission also determines that it should not include the Upper 700 MHz D Block and a certain amount of the SMR spectrum, both of which previously have been included.

A. Standard for Inclusion of Bands

29. When assessing spectrum aggregation in its review of wireless transactions, the Commission evaluates the current spectrum holdings of the acquiring firm that are ''suitable'' and ''available'' in the near term for the provision of mobile telephony/broadband services. Suitability is determined by whether the spectrum is capable of supporting mobile service given its physical properties and the state of equipment technology, whether the spectrum is licensed with a mobile allocation and corresponding service rules, and whether the spectrum is committed to another use that effectively precludes its uses for mobile services. Spectrum is considered ''available'' if it is ''fairly certain that it will meet the criteria for suitable spectrum in the near term, an assessment that can be made at the time the spectrum is licensed or at later times after changes in technology or regulation that affect the consideration.''

30. In the *Mobile Spectrum Holdings NPRM,* 77 FR 61330, October 9, 2012, the Commission sought comment on whether to continue to consider spectrum based on the suitability and availability standard or whether to consider other factors and asked for any legal, economic, and engineering justifications to support existing or modified criteria to determine the suitability and availability standard. The Commission also sought comment on the application of the relevant factors to particular spectrum bands and which spectrum bands should be included in the Commission's spectrum analysis.

31. The Commission retains the current definition. The Commission finds that the current suitable and available standard has worked well to identify new spectrum to be included in the spectrum screen, and the record does not provide persuasive evidence to support modifying the current suitability and availability standard. Any narrower definition such as ''actually'' or ''imminently'' available would preclude relevant spectrum from being accounted for in its analysis of spectrum aggregation as the Commission review secondary market wireless transactions.

B. 600 MHz Band

32. The Commission finds that the 600 MHz Band is suitable for the provision of mobile telephony/mobile broadband services. In the Incentive Auction *Report and Order,* the Commission establishes rules to implement the Incentive Auction and to govern the use of the 600 MHz Band for the provision of mobile wireless services and adopts a band plan that facilitates wireless broadband deployment operations. The Commission also finds that the 600 MHz Band is available for the provision of mobile telephony/mobile broadband services, citing the framework for transitioning incumbent broadcasters from the 600 MHz Band within 39 months of the close of the auction set forth in the *Incentive Auction Report and Order.* Given this concrete transition framework, the relative clarity regarding the availability of this spectrum, and the importance of this band to the mobile wireless marketplace going forward, the Commission anticipates that the spectrum cleared at auction is likely to begin having a competitive impact very shortly after the auction ends. As a result, the Commission will consider the 600 MHz Band to be available upon the release of the *Channel Reassignment PN* after conclusion of the Incentive Auction. The amount of repurposed 600 MHz Band spectrum added to the spectrum screen will be equal to the total megahertz amount of spectrum repurposed for flexible use wireless licenses.

C. Advanced Wireless Service

1. AWS–4 Spectrum

33. The Commission finds that the 40 megahertz of spectrum in the AWS–4 band is suitable and available for the provision of mobile/telephony broadband services, and therefore should be included in the spectrum screen. In the *AWS–4 Report and Order,* the Commission adopted licensing, operating, and technical rules for stand-alone terrestrial mobile wireless operations in the AWS–4 band, which already included an allocation for mobile use, and took other actions to remove regulatory barriers to mobile broadband use of the AWS–4 band, as described above. The Commission also determined that it would assign AWS–4 licenses to DISH, as the incumbent MSS operator in that spectrum, and established a concrete, proven process for efficient relocation of incumbent operations from 2180–2200 MHz. In light of these Commission actions, the Commission finds that the 40 megahertz

in the AWS–4 band should be included in the spectrum screen going forward.

34. The Commission rejects argument that it should include only 35 out of the 40 megahertz of AWS–4 spectrum because of the stringent technical restrictions placed on AWS–4 operations in 2000–2005 MHz to protect adjacent operations in the upper portion of the H Block (1995–2000 MHz). Given the flexibility provided in the *AWS–4 Report and Order* allowing these technical restrictions on AWS–4 operations in 2000–2005 MHz to be modified by commercial agreements between licensees of the AWS–4 band and the H Block, and the fact that DISH now holds all AWS–4 and H Block licenses, the Commission concludes that any potential interference issues between 2000–2005 MHz and 1995–2000 MHz should be sufficiently resolved so that the Commission should count 2000–2005 MHz in the spectrum screen along with the other 35 megahertz of AWS–4 spectrum.

2. H Block

35. The Commission finds that the H Block spectrum is suitable and available for the provision of mobile/telephony broadband services, and therefore should be counted in the spectrum screen. In the *H Block Report and Order* (78 FR 50214, August 16, 2013), the Commission explained that through the adoption of service rules for this band, the Commission increased the nation's supply of spectrum for flexible-use services, including mobile broadband, and in particular would extend the widely deployed broadband PCS band used by numerous providers to offer mobile service across the United States. The Commission also found that, consistent with the technical rules it adopted, the use of both the 1915–1920 MHz band and the 1995–2000 MHz band can occur without causing harmful interference to broadband PCS downlink operations at 1930–1995 MHz. In light of these conclusions, along with the recent completion of the H Block auction and the fact that incumbent licensees in these bands previously were cleared by UTAM, Inc. and by Sprint, the Commission finds that the H Block should be included in the spectrum screen going forward.

3. AWS–3 Bands

36. The Commission finds that the AWS–3 bands (1695–1710 MHz, 1755–1780 MHz, and 2155–2180 MHz) are suitable for the provision of mobile telephony/mobile broadband services. In the recent *AWS–3 Report and Order,* the Commission amended the Allocation Table to include a mobile, non-Federal allocation for the 1695–1710 MHz and 1755–1780 MHz bands, which already applied to the 2155–2180 MHz band and found that licensing AWS–3 bands in a combination of 5 and 10 megahertz blocks aligns well with a variety of wireless broadband technologies, including LTE, Wideband Code Division Multiple Access (WCDMA), HSPA, and LTE-advanced. The Commission concluded that pairing uplink/mobile transmit operations in the 1755–1780 MHz band with downlink operations in the 2155–2180 MHz band would be compatible with similar operations in the adjacent AWS–1 band, effectively creating a combined 140 megahertz band. Further, the Commission observed that no regulation would prohibit licensees from pairing the unpaired 1695–1710 MHz uplink band with another present or future licensed downlink band. Given the anticipated use of the AWS–3 bands for mobile broadband service, either as an extension of the AWS–1 band or potentially in combination with other AWS bands, the Commission concludes that the AWS–3 bands are suitable for the provision of mobile telephony/mobile broadband service.

37. The Commission also finds that the AWS–3 bands should be considered available for mobile telephony/mobile broadband services on a market-by-market basis in the future, given that the timing of that access will depend on the nature of the Federal operations affecting each particular market. Commercial operators will have access to the 1755–1780 MHz and 1695–1710 MHz bands outside of areas where federal operations are protected during their transition, inside areas where federal operations are protected during their transition if successfully coordinated with the Federal incumbent, in areas in which the Federal incumbents have relocated pursuant to their Transition Plan, and inside areas in which Federal incumbents are protected indefinitely if successfully coordinated with the Federal incumbent. Accordingly, given that the effect of Federal incumbent operations on the timing and scope of commercial operations will vary from market to market, the Commission determines that the 1755–1780 MHz and 1695–1710 MHz bands will become available on a market-by-market basis in the future. In addition, consistent with the paired offering of the 2155–2180 MHz band with the 1755–1780 MHz band, the Commission will count the 2155–2180 MHz band as available for purposes of the spectrum screen at the same time the Commission counts the 1755–1780 MHz band in the particular market, consistent with its approach to the paired AWS–1 band.

38. The Commission notes that the timing and the extent of access by commercial licensees to the 1755–1780 MHz and 1695–1710 MHz bands in particular markets will depend, in part, on the timelines to be set in the Transition Plans for relocating Federal incumbents, which will be made publicly available. In light of the importance of this band in adding capacity spectrum for mobile wireless providers to deploy next-generation networks, and the timelines to be set in the Transition Plans for different systems in different markets, the Commission will count the 1755–1780 MHz and 1695–1710 MHz bands in the spectrum screen in a particular market once all relocating Federal incumbent systems in that market are within three years of completing relocation, according to the Transition Plans. The Commission notes that the timing and the extent of access by commercial licensees to these AWS–3 bands also will depend on successful coordination with federal systems during the transition process and the Federal systems that will not be relocating from these bands. However, given that the nature and timing of the coordination will be the subject of two-party private discussions between commercial licensees and Federal incumbents and will vary from market to market, from licensee to licensee, and from system to system, the Commission will not base the timing of when the Commission count AWS–3 spectrum to be available in a particular market on the status of coordination with non-relocating Federal incumbents. The Commission notes that the Commission will count the 2155–2180 MHz band in the spectrum screen for a particular market at the same time the Commission counts the 1755–1780 MHz and 1695–1710 MHz bands in that market, for the reasons indicated above.

D. Big LEO Bands

39. The Commission declines to add to the spectrum screen Big LEO MSS spectrum in the 2483.5–2495 MHz and 1610–1617.775 MHz ranges, noting that Globalstar's ATC authority to operate terrestrial base stations and mobile terminals using this spectrum under the authority of a waiver granted in 2008 was suspended in 2010 and none of these proposed changes have been acted on by the Commission. Thus, the Commission declines to add this Big LEO MSS spectrum to the spectrum screen at this time. The Commission distinguishes this decision from its

determination to add to the spectrum screen the AWS–4 band (2000–2020 MHz and 2180–2200 MHz), for which the Commission has taken a number of actions to make the band suitable and available for mobile telephony/mobile broadband. Specifically, for the AWS–4 band, the Commission has added a mobile allocation, adopted licensing rules for stand-alone terrestrial mobile wireless operations, and assigned the spectrum to the incumbent MSS operator, DISH.

E. BRS/EBS Bands

40. Background. The 194 megahertz in the 2496–2690 MHz band (2.5 GHz) comprises (1) 73.5 megahertz licensed to commercial operators in the BRS band; (2) 112.5 megahertz licensed to eligible educational institutions or non-profit educational organizations in the EBS band; and (3) 8 megahertz licensed to BRS or EBS as guard bands dividing the lower, middle, and upper band segments of the 2.5 GHz.

41. In 2008, in the *Sprint-Clearwire Order,* the Commission decided to include in the spectrum screen 55.5 megahertz of BRS spectrum in the upper band segment, in those markets in which the transition to the new band plan was complete. The Commission observed that 2.5 GHz licensees had made substantial progress in the prior few years in transitioning to the new band plan, finalizing the WiMAX standards, developing equipment, and formulating their plans for using the 2.5 GHz band to provide service. The Commission declined to include in the spectrum screen the 12 megahertz of BRS spectrum in the middle band segment (''MBS'') due to concerns of interference from legacy high-power video operations, stating it lacked sufficient information ''to determine the extent to which MBS is in fact available for mobile telephony/broadband services.'' The Commission also declined to include in the spectrum screen the BRS Channel-1 (2496–2502 MHz), which is not contiguous to the 55.5 megahertz of BRS spectrum that was included, finding that the Channel does not fit into the contemplated WiMAX deployment plans. Further, the Commission excluded from the screen the 8 megahertz of guard bands because they are secondary to adjacent-channel operations and they are too narrow to be used unless they were all aggregated in a market.

42. The Commission currently does not include in the screen any EBS spectrum, which is licensed to eligible educational entities who can lease spectrum to commercial operators subject to the requirement, *inter alia,* to reserve at least five percent of digital transmission capacity for educational purposes. In the *Sprint-Clearwire Order,* it declined to include EBS spectrum in the screen, observing that ''the primary purpose of EBS is to further the educational mission of accredited public and private schools, colleges and universities providing a formal educational and cultural development to enrolled students through video, data, or voice transmissions.'' The Commission noted that, while educational licensees are allowed to lease their excess capacity to commercial operators, leasing is subject to various special requirements designed to maintain the primary educational character of services provided using EBS spectrum. In addition, the Commission recognized that other elements of the EBS licensing regime, such as its solely site-specific character, with the absence of any licensee in various unassigned EBS ''white spaces,'' complicate use of this spectrum for commercial purposes. Further, the Commission indicated that it was sensitive to the concerns raised by EBS licensees that potential divestitures, in response to spectrum aggregation concerns relating to competition among commercial services, could disproportionately harm EBS licensees.

43. In subsequent transaction reviews, the Commission declined to add EBS or additional BRS spectrum to the spectrum screen, finding either that the circumstances had not sufficiently changed from *Sprint-Clearwire Order* or that the instant rulemaking proceeding is a more appropriate place to evaluate this issue. In the context of reviewing the *SoftBank-Sprint-Clearwire* transaction, however, the Commission did consider arguments on the record regarding the competitive effect of Sprint obtaining 100 percent stock ownership in and *de facto* control of Clearwire's BRS and EBS spectrum holdings, finding competitive harm unlikely.

44. Discussion. The Commission finds that it is necessary to modify the amount of 2.5 GHz spectrum the Commission currently includes in the screen to reflect today's marketplace realities. The Commission will update the spectrum screen to increase the amount of 2.5 GHz spectrum from 55.5 megahertz to 156.5 megahertz. The Commission will add the 12 megahertz in the two MBS BRS channels, as well as 89 megahertz of EBS spectrum, which represents most of the EBS spectrum, adjusted to reflect white space and education use elements. The Commission will continue to exclude the six megahertz in BRS Channel 1 and the guard bands.

45. As an initial matter, the Commission observes that Sprint announced its intent to integrate its 2.5 GHz spectrum throughout its network to provide mobile broadband service. Sprint recently announced its next generation service ''Sprint Spark,'' an enhanced LTE network, which it plans to deploy over the next three years using its SMR, PCS, and 2.5 GHz spectrum. The Commission finds that based upon how the 2.5 GHz band is being used today, and will be used in the near term; the majority of the band is suitable and available for mobile telephony/mobile broadband services.

46. With respect to BRS spectrum, the Commission finds that, in addition to the 55.5 megahertz currently counted in the screen, the Commission should include 12 megahertz of BRS MBS spectrum. The Commission recognizes that legacy video operations in the MBS, once considered a significant impediment to the deployment of cellularized operations in the MBS, are now no longer a barrier to deploying mobile broadband service in the vast majority of markets. The Commission notes that Sprint recently has acknowledged that BRS MBS channels are ''more routinely available'' for mobile broadband use. Accordingly, the Commission includes the 12 megahertz of BRS MBS spectrum in the screen.

47. However, the Commission will continue to exclude the 6 megahertz BRS Channel 1 (2496–2502 MHz). The proponents of including BRS Channel 1 in the screen have not demonstrated any material change in circumstances since 2008 with respect to that channel and the Commission acknowledges Sprint's concern that BRS Channel 1 is not contiguous with the other BRS channels and therefore is not conducive to the provision of mobile telephony/mobile broadband service.

48. With respect to EBS spectrum, the Commission declines to continue its policy of excluding all EBS spectrum. Leasing in and of itself does not preclude the spectrum from meeting the suitable and available standard. The Commission does not find that the differences in propagation characteristics between the 2.5 GHz band and lower frequency spectrum should result in its continued exclusion of the 2.5 GHz band from the spectrum screen for purposes of its competitive review. Nor does the Commission agree with Sprint that the aggregation of 20 megahertz of this band is a necessary precursor to counting EBS in the screen. The benefit of contiguous holdings in a band is not a factor unique to EBS

spectrum that warrants excluding EBS holdings from the screen in cases where such contiguity is not achieved.

49. Although the Commission finds that EBS spectrum generally is suitable and available for mobile telephony/mobile broadband services, the Commission agrees with Sprint that there are certain factors unique to EBS that warrant not including all of the EBS spectrum in the screen. The Commission will continue to exclude the five percent of the EBS capacity that is reserved for educational uses. The Commission remains committed to EBS spectrum serving educational purposes. Originally, the 2500–2690 MHz band was allocated for ITFS service and ''established to provide formal education and cultural development in aural and visual form to students enrolled in accredited public and private schools, colleges and universities.'' The Commission continues to support the education mission of accredited public and private schools, colleges, and universities providing a formal educational and cultural development to enrolled students through video, data, or voice transmissions. Therefore, as a starting point, the Commission will include 95 percent, or approximately 107 megahertz, of EBS spectrum in the screen.

50. With EBS spectrum licensed on a site-specific basis, certain areas exist where the Commission has not assigned a license to an educational entity. And no educational entity has been able to apply for a license for an EBS white space since 1995. Therefore, no commercial wireless provider has ever had the opportunity to lease EBS spectrum in that area. Therefore, white spaces can present certain obstacles for providing reliable, wide-area coverage. The Commission finds it reasonable to discount for white space when including EBS spectrum in the screen.

51. Given the complexity of calculating a white space discount on a market-by-market basis, Sprint proposes a uniform, nationwide EBS white space discount for administrative practicability and regulatory certainty. Sprint calculated that across all EBS channels, an average of approximately 16.5 percent of the population is located in EBS white space and therefore proposes to use a 16.5 percent discount. The Commission agrees that a nationwide discount is the best option for applying a white space discount for EBS spectrum and find Sprint's proposal reasonable. While as Verizon Wireless notes, using a nationwide average may in some instances undercount EBS white space in some markets and overcount EBS white space in other markets, the Commission finds that using an average across all markets is a reasonable method, which balances administrative efficiency with the complexity of a precise market-by-market calculation. Thus, after taking the discount into consideration, of the initial 107 megahertz of EBS spectrum, the Commission will include 89 megahertz of EBS spectrum in the screen. As discussed in Section VI.G below, the Commission declines to further weight EBS spectrum, or other spectrum bands, based on propagation characteristics.

F. Upper 700 MHz D Block

52. In light of Congress' reallocation of the Upper 700 MHz D Block spectrum (758–763 MHz, 788–793 MHz) for public safety use—and the subsequent steps taken by the Commission and the Public Safety and Homeland Security Bureau to effectuate the reallocation and licensing of this spectrum for public safety—the Commission finds that the 10 megahertz previously designated as the Upper 700 MHz D Block is no longer suitable and available for the provision of mobile telephony/mobile broadband services. Therefore, going forward, the Commission will exclude from the spectrum screen that 10 megahertz (758–763 MHz, 788–793 MHz) that currently is part of the screen, along with the adjacent public safety broadband spectrum that is also now licensed to FirstNet (763–768 MHz, 793–798 MHz), which was not previously counted in the initial spectrum screen.

53. The Commission notes that, under the Spectrum Act, FirstNet is permitted to provide access to the 20 megahertz of Public Safety Broadband spectrum to commercial entities through certain ''covered leasing agreements.'' The Commission will not add to the screen any of this spectrum merely because FirstNet has entered into leasing arrangements contemplated by the Act. Deployment of this spectrum is essential to the critical statutory goal of deploying a nationwide interoperable public safety broadband network, and the Commission wants to provide equal incentives to all commercial operators to partner with FirstNet to make this goal a reality.

G. SMR Bands

54. In 2004, the Commission adopted a new band plan for the 800 MHz band to ''address the [then] ongoing and growing problem of interference to public safety communications in the 800 MHz band.'' The interference problem was caused ''by a fundamentally incompatible mix of two types of communications systems: Cellular-architecture multi-cell systems . . . and high-site non-cellular systems.'' To provide immediate relief, the Commission implemented technical standards that defined unacceptable interference in the 800 MHz band, while also reconfiguring the band to separate commercial wireless systems from public safety and other high site systems. Pursuant to the band reconfiguration, the Commission eliminated the interleaving of public safety and commercial channels in the 800 MHz band and separated cellularized multi-cell and non-cellularized high-site systems within the band.

55. Under the reconfiguration plan, Nextel (now Sprint) was required to vacate the 806–817 MHz and the 851–862 MHz band segments and relocate to 817–824/862–869 MHz. The Commission had designated the upper portion of the 800 MHz band (817–824 MHz/862–869 MHz) for Enhanced Specialized Mobile Radio (ESMR) systems and designated the lower portion of the 800 MHz band (806–815 MHz/851–860 MHz) for use by public safety, Critical Infrastructure Industries (CII), and other non-cellular systems.

56. The Commission eliminates from inclusion in the screen 7.5 megahertz in the 800 MHz Band because, after the Commission reconfigured the band, that spectrum is no longer licensed for commercial, cellularized operations. The Commission also eliminates the remaining 5 megahertz in the 900 MHz band that is narrowly-channelized in 125 kHz blocks and not adjacent to the remaining 14 megahertz of SMR spectrum that is licensed for and considered suitable and available for the provision of mobile telephony/mobile broadband services. Therefore, going forward, the Commission finds only 14 megahertz of SMR spectrum is suitable and available for the provision of mobile telephony/mobile broadband services and will be included in the screen.

III. Licensing Through Competitive Bidding

57. The Commission concludes that it is in the public interest, for auctions, to replace the current case-by-case approach of evaluating long form applications of winning bidders with a determination of whether a band-specific spectrum holding limit should apply *ex ante* to the licensing of particular bands through competitive bidding. In the *R&O,* the Commission finds that the Commission should determine what if any spectrum holding limitations should affect the licensing of

particular bands through competitive bidding before the relevant competitive bidding process begins for that band. The Commission determines certain guidelines that the Commission will consider in making such determinations prior to the beginning of the competitive bidding process for a particular band, which generally will be made in the service rulemakings for those bands, enabling the Commission to take into account all relevant objectives specific to the bands in question and competitive bidding process. Given the proximity of the AWS–3 auction and Incentive Auction, the Commission makes determinations regarding whether to adopt, in the context of this rulemaking, any mobile spectrum holdings limits for the licensing of these bands through competitive bidding. In particular, based on the record in this proceeding and in the two service rulemakings, as well as the statutory goals set forth in the Communications Act and the Spectrum Act, the Commission reserves spectrum in the forward auction for the 600 MHz Band licenses in order to ensure against excessive concentration in holdings of below-1-GHz spectrum, and the Commission declines to adopt any mobile spectrum holding limits for the licensing of the AWS–3 bands through competitive bidding.

A. Ex Ante Application of Mobile Spectrum Holding Limits to the Licensing of Spectrum Bands Through Competitive Bidding

58. In the *Mobile Spectrum Holdings NPRM,* the Commission sought comment on general approaches to address mobile spectrum policies at auction, including whether to retain its current case-by-case approach or adopt a bright-line limit. The Commission also sought comment on the costs and benefits of applying a case-by-case approach to initial licenses acquired at auction and whether it affords participants sufficient certainty to determine whether they would be allowed to hold a given license post-auction.

59. The Commission concludes that it is in the public interest to replace its post-auction case-by-case analysis of the licensing of spectrum bands through competitive bidding with a determination of whether a band-specific mobile spectrum holding limit is necessary to carry out the duties under the Communications Act and, if so, to establish an *ex ante* application of that limit to the competitive bidding for that band.[1] The Commission finds that upfront, clear determination, instead of case-by-case analysis post-auction, would provide potential bidders with greater certainty in the auction process regarding how much spectrum they would be permitted to acquire at auction. Providing such certainty is consistent with Section 309(j)(3)(E) of the Communications Act, which emphasizes the need for clear bidding rules ''to ensure that interested parties have a sufficient time to develop business plans, assess marketplace conditions, and evaluate the availability of equipment for the relevant services.''

60. To the extent that the Commission adopts a mobile spectrum holding limit for the licensing of a particular band through competitive bidding, applying the limit *ex ante* would provide greater certainty and efficiency in the process of licensing through competitive bidding, which would be particularly important for complex auctions like the Incentive Auction. Upfront, bright-line determinations would streamline the post-auction review of license applications, which should allow winning bidders to receive their licenses more quickly and proceed to deploy service using the acquired spectrum. The application of a mobile spectrum holding limit *ex ante* would avoid certain challenges in trying to remedy concerns after post-auction competitive review. If the Commission were to make a finding post-auction that the acquisition of spectrum by a winning bidder would be likely to cause competitive harm, it could compel abandonment of the license application or divestiture of the license won at auction, which could create incentives for bidder behavior that would undermine the goals of the auction. Alternatively, divestiture of another license from the bidder's pre-auction spectrum holdings might not address the Commission's competitive concerns with aggregation of the spectrum made available at auction, especially if the spectrum the winning bidder would propose to divest does not have similar characteristics of the spectrum acquired in the auction.

61. The Commission finds that, for competitive review of spectrum licenses acquired through competitive bidding, the benefits of a bright-line *ex ante* application of a mobile spectrum holding limit to the competitive bidding for those licenses outweigh any costs associated with any perceived loss of flexibility that the existing post-auction review might afford. The Commission notes that a case-by-case review of spectrum licenses acquired through secondary markets continues to be appropriate, as discussed below.

62. The Commission finds that the determination of whether to apply any mobile spectrum holding limits to the licensing of a particular band through competitive bidding, and if so the scope of such limits and policies, should be clearly specified sufficiently in advance of the auction. This approach would afford a prospective bidder sufficient time to develop a bidding strategy based on the mobile spectrum holdings determination adopted for an upcoming auction, while allowing the Commission to consider the unique circumstances of each spectrum band auction when making its determination.

63. The Commission would evaluate a number of factors in considering whether to adopt a mobile spectrum holdings limit for the licensing of a particular band through competitive bidding and, if so, what type of limit to apply. As an initial matter, its evaluation will encompass the ''broad aims of the Communications Act,'' which include, among other things, preserving and enhancing competition in relevant markets, accelerating private sector deployment of advanced services, and generally managing the spectrum in the public interest. Its determination will help carry out its duties under the Communications Act, serving the public interest. Its public interest analysis in this context also may entail assessing whether a particular auction specific policy will affect the quality of communications services or result in the provision of new or additional services to consumers. Moreover, the Commission must consider any other statutory goals and directives applicable to a particular spectrum band being licensed by competitive bidding.

64. The Commission will consider whether the acquisition at auction of licenses to use a significant portion of spectrum by one or more providers would potentially harm the public interest by reducing the likelihood that multiple service providers would have access to sufficient spectrum to compete robustly in the provision of mobile telephony/mobile broadband service. This determination will be based on several factors, including total amount of spectrum to be assigned, characteristics of the spectrum to be assigned, timing of when the spectrum could be used for mobile telephony/mobile broadband services, the specific rights being granted to licensees of the spectrum, and the extent to which

[1] In subsequent secondary market transactions, the licenses acquired at auction will be included in the application of our revised spectrum screen when the spectrum is deemed suitable and available for inclusion in the screen.

competitors have opportunities to gain access to alternative bands that would serve the same purpose as the spectrum licenses at issue.

B. 600 MHz Band Incentive Auction

65. For the Incentive Auction, the Commission establishes a market-based spectrum reserve of up to 30 megahertz in each license area designed to ensure against excessive concentration in holdings of low-band spectrum—a reserve that includes safeguards to ensure that all bidders bear a fair share of the cost of the Incentive Auction. The market-based reserve balances the need to meet the requirements for concluding the Incentive Auction with the competition goals discussed above.

66. In the *Mobile Spectrum Holdings NPRM,* the Commission sought comment on whether to adopt limits on the amount of spectrum that entities could acquire in the context of spectrum auctions mandated by the Spectrum Act. In the *Incentive Auction NPRM,* the Commission sought comment on what, if anything, it should do to meet the statutory requirements of section 309(j)(3)(B) and promote the goals of the Incentive Auction. For instance, the Commission noted that ''section 309(j)(3)(B)'s directive to avoid excessive concentration of licenses might militate in favor of a rule that permits any single participant in the auction to acquire no more than one-third of all 600 MHz Band spectrum being auctioned in a given licensed area.''

67. The amount of repurposed spectrum depends on the outcome of the reverse and forward auction components of the Incentive Auction. The reverse and forward auctions will be integrated in a series of stages. Each stage will consist of a reverse auction and a forward auction bidding process. Prior to the first stage, the initial spectrum clearing target will be determined based on broadcasters' collective willingness to relinquish spectrum usage rights at the opening prices offered to them. The first stage reverse auction bidding rounds will determine the total amount of incentive payments necessary in connection with the initial clearing target. The forward auction bidding process will follow. If the final stage rule described below is satisfied, the forward auction bidding will continue until there is no excess demand for 600 MHz Band licenses. If the final stage rule is not satisfied, additional stages will be run, with progressively lower spectrum targets in the reverse auction and less spectrum available in the forward auction until the rule is satisfied.

68. The final stage rule is a reserve price with two components, both of which must be satisfied. The first component requires that the prices for licenses in the forward auction meet or exceed a certain price benchmark to assure that prices generally reflect competitive market values for comparable spectrum licenses. The first component consists of alternative conditions, depending on the clearing target for the particular stage in which it is being applied. The alternative formulations recognize that per-unit market prices for spectrum licenses may decline consistent with an increase in supply. The price and spectrum clearing benchmarks will be established by the Commission in the *Incentive Auction Procedures PN,* after an opportunity for additional comment. The second component of the final stage rule requires that the proceeds of the forward auction be sufficient to meet expenses set forth in the Spectrum Act and any Public Safety Trust Fund amounts needed for FirstNet. If the requirements of both components of the reserve price are met, then the final stage rule is satisfied.

69. In the *Incentive Auction Report and Order,* the Commission indicates that, in the coming months, the Commission will solicit public input on final auction procedures by Public Notice (''*Incentive Auction Comment PN*''). This Public Notice will include specific proposals on crucial auction design issues such as opening prices, television channel assignment optimization, how much market variation to accommodate in the 600 MHz Band Plan, and benchmarks for implementing the final stage rule. Well in advance of the auction, also by public notice, the Commission will resolve these implementation issues and provide detailed explanations and instructions for potential auction participants (*''Incentive Auction Procedures PN''*).

1. The Need for a Market-Based Spectrum Reserve

70. Given the importance of multiple providers, including rural and regional providers, having access to below-1-GHz spectrum for deployment and competition, the Commission concludes that a clear mobile spectrum holdings policy for the Incentive Auction is necessary to increase access opportunities to the 600 MHz Band. The Commission finds that it is appropriate to adopt a market-based spectrum reserve for entities that do not currently hold a significant amount of below-1-GHz spectrum.

71. The Commission will reserve on a contingent basis, licenses covering up to 30 megahertz of spectrum for bidders with spectrum holdings, at the deadline for filing a short-form application to participate in the forward auction, of less than 45 megahertz, on a population-weighted basis, of suitable and available below-1-GHz spectrum in a PEA. All bidders, including those unable to bid on reserved licenses, will be able to bid on the unreserved licenses. The Commission specifies the maximum amount of spectrum that will be reserved in each market for eligible entities (''reserve-eligible'' entities) in the forward auction under the various band plan scenarios identified in the *Incentive Auction Report and Order,* but the actual amount of spectrum reserved will depend on the demand by reserve-eligible bidders when the auction reaches a trigger (the ''spectrum reserve trigger''). The Commission finds that this approach balances a number of the key statutory directives, including promoting competition, facilitating the deployment of advanced services by making spectrum available for flexible use, and sharing the costs of the Incentive Auction on a fair and equitable basis.

72. In reaching its decisions, the Commission must consider a number of statutory directives applicable to the Incentive Auction, including promoting competition, making spectrum available for flexible use, meeting proceeds requirements, and facilitating deployment of advanced services. With respect to promoting competition in the mobile wireless marketplace, the Commission observes that any of the types of limits discussed on the record—spectrum caps based on a provider's existing below-1-GHz holdings, equal spectrum caps for all bidders, or reserved spectrum—have the potential to promote competition by ensuring that in the near future, more providers would hold a sufficient mix of spectrum to compete robustly. The Commission finds that its market-based spectrum reserve for the Incentive Auction has distinct advantages over the other approaches with respect to the other statutory directives.

73. First, the spectrum reserve gives mobile service providers significant latitude to bid on spectrum licenses they need in each area to meet their network requirements, including providers who are unable to bid for reserved spectrum in a particular PEA. Rules that would restrict the larger providers to no more than a 5 x 5 megahertz block of 600 MHz Band spectrum do not adequately consider the needs of those providers for

additional spectrum to meet the demand of their subscribers in the longer term. Nor do such rules adequately consider that efficient deployment of services using the 600 MHz Band spectrum would likely rely on ensuring that the larger as well as smaller nationwide providers having a stake in the development of equipment for the band. Spectrum caps also could affect to a certain extent mobile broadband providers' flexibility to expand services to meet increasing consumer needs.

74. Second, proposals that would set an individual spectrum cap on the amount of 600 MHz Band spectrum for which each provider could acquire licenses have greater risk of decreasing forward auction proceeds, and thus endangering its ability to repurpose spectrum, because it likely would lessen competition between the largest wireless providers for spectrum in amounts greater than the cap would permit.

75. The Commission concludes that its market-based spectrum reserve, particularly in the amounts and under the rules the Commission adopts is unlikely to reduce competition among bidders and in fact, will encourage competition among bidders wanting at least 20 megahertz of spectrum, as compared to other potential approaches to mobile spectrum holdings limits that could be applied to the Incentive Auction. Under the market-based spectrum reserve, every bidder will have the opportunity to bid for, and win, at least half of the 600 MHz Band spectrum in each market, and at some levels of spectrum made available in the forward auction, significantly more than half.

76. Third, the Commission concludes that its approach would not reduce participation in the auction by large providers to a level that would reduce the amount of spectrum that can be repurposed by the Incentive Auction. The reserved spectrum amount would be contingent upon (and subject to a reduction based on) the demand expressed in the forward auction by reserve-eligible bidders. If there is insufficient demand for reserved spectrum licenses, the amount of reserved spectrum would be reduced.

77. The Commission also finds that its market-based spectrum reserve is more likely to achieve its purposes more effectively than bidding credits based on the level of spectrum holdings. On balance, applying bidding credits based on spectrum holdings as opposed to reserving licenses for providers without significant below-1-GHz spectrum would not address the Commission's competitive concerns with aggregation of the spectrum made available at auction. The Commission notes that in the *Incentive Auctions Report and Order* the Commission adopted the bidding credits for the forward auction applicable to small businesses. The Commission also stated it will initiate a separate proceeding to examine its designated entity (''DE'') rules generally.

78. The Commission notes that its decision to adopt a 600 MHz Band spectrum reserve and to establish the amounts of reserved spectrum specified below is based on the current marketplace structure of the mobile wireless service industry. If significant changes in the marketplace structure occur or a proposed transaction is filed with the Commission in the future affecting the top four nationwide providers and their spectrum holdings, the Commission will revisit its decisions here regarding the reserved spectrum provisions for the 600 MHz Band that the Commission adopted. The Commission will review as well whether changes should be made to any other decisions in the *R&O.* The Commission also plans to consider in a Further Notice of Proposed Rulemaking possible change to certain auction rules relating to joint bidding arrangements and strategies in the Incentive Auction. In order to allow the Commission to evaluate how certain bidding arrangements might affect the Incentive Auction, potential bidders will need to file well before the normal deadlines some of the information currently required in auction and license application forms.

2. Qualification To Bid on Reserved Licenses

79. The Commission needs to facilitate access by multiple providers to below-1-GHz spectrum is the basis for its adoption of a market-based spectrum reserve for the Incentive Auction and, accordingly, the Commission finds that a provider's existing below-1-GHz holdings in a particular PEA should be the threshold basis for determining whether the provider qualifies to bid on reserved spectrum. To qualify to bid on reserved licenses in a PEA, an entity must not have an attributable interest in 45 megahertz or more, on a population-weighted basis, of below-1-GHz spectrum that is suitable and available for the provision of mobile telephony/mobile broadband services in that PEA, at the deadline for filing a short-form application to participate in the Incentive Auction. In its calculation of below-1-GHz spectrum holdings, the Commission includes not only the entity's licensed spectrum, on a county-by-county basis, but also all long-term spectrum leasing arrangements, with spectrum being attributed to both the lessee and lessor. Further, it includes in the calculations only the below-1-GHz spectrum that the Commission currently considers to be ''suitable'' and ''available,'' in the modified spectrum screen adopted today, and thus, no 600 MHz Band spectrum is included, as although it is suitable, it is not considered available until the conclusion of the Incentive Auction. The 45 megahertz of below-1-GHz spectrum approximates one-third of the 134 megahertz of below-1-GHz spectrum that the Commission counts in the modified total spectrum screen the Commission adopted. The Commission will measure an entity's spectrum holdings on a county-by-county basis within a PEA,[2] and then construct a total county-population-weighted below-1-GHz spectrum holding for each entity within the PEA.[3] As discussed below, even if a non-nationwide provider holds approximately one-third or more of the suitable and available below-1-GHz spectrum in a given market, it will not be precluded from bidding on reserved spectrum licenses in any market.

80. The Commission observes that the 45 megahertz threshold (approximately one-third of total below-1-GHz spectrum) to identify those who can bid on reserved licenses is consistent with the approximately one-third threshold for total spectrum that the Commission uses to identify those holdings in local markets that may raise particular competitive concerns in the context of

[2] In the context of secondary market transactions review, the Commission typically measures a provider's holdings in a particular CMA based on the maximum spectrum holdings in any one county within that CMA. Unlike the screen the Commission uses for reviewing transactions, the qualification for bidding on reserved spectrum is a bright-line test, and PEAs are generally larger in geographic scope than the CMAs it uses for competitive review of transactions. Given those distinctions, the Commission finds that measuring a bidder's below-1-GHz spectrum holdings amount in a given PEA, based on the highest below-1-GHz holding amount in any one county within a PEA, would not be appropriate.

[3] To determine whether an entity is qualified to bid on reserved spectrum, its below-1-GHz spectrum holdings are calculated by summing (PEA county spectrum holdings x PEA county population (using U.S. Census 2010 population data)), and then dividing that sum by the total population of the PEA. In its calculations, the Commission includes licensed spectrum, on a county-by-county basis, as well as all long-term spectrum leasing arrangements, with leased spectrum being attributed to both the lessee and lessor. In those PEAs where there are existing long-term commercial leases, as the Commission attributes the leased spectrum to both the lessee and lessor, it increases the total below-1-GHz spectrum amount included by the (population-weighted) amount of the lease so that service providers' holdings are not overstated.

secondary market transactions, as discussed below. The approximately one-third threshold is, based on its experience in numerous transactions over the last decade, an effective analytical tool in the secondary market context. Similarly, the Commission concludes that a threshold of approximately one-third is an effective line of demarcation to identify those entities that currently lack significant below-1-GHz spectrum holdings and would likely benefit from access to the reserved spectrum. In particular, the Commission finds that this threshold would help to ensure that multiple providers are able to access a sufficient amount of low-band spectrum, which would facilitate the extension and improvement of service in both rural and urban areas, to the benefit of consumers.

81. *Non-Nationwide Providers.* The 45 megahertz holding threshold may have substantial effects on non-nationwide providers that could outweigh the intended benefits.[4] In many areas, regional and local service providers offer consumers additional choices in the areas they serve and provide some constraint on the ability of nationwide providers to act in anticompetitive ways to the detriment of consumers. Although nationwide providers generally set prices on a national basis, there can be significant variation in discounts, service quality, and extent of coverage at the local level. Non-nationwide providers are also important sources of competition in rural areas, where multiple nationwide service providers may have less incentive to offer high quality services. Today, 92 percent of non-rural consumers, but only 37 percent of rural consumers are covered by at least four 3G or 4G mobile wireless providers' networks and more than 1.3 million people in rural areas have no mobile broadband access. Smaller providers in such areas are likely to be more dependent upon the efficiencies gained from the unique propagation benefits of 600 MHz spectrum because they are less able to subsidize their deployment costs by revenues accrued in more densely populated areas where a nationwide subscriber base provides them with greater scale economies. Promoting competition by non-nationwide providers also advances the statutory goals of avoiding excessive concentration of licenses, disseminating licenses among a wide variety of applicants, and encouraging rapid deployment of new wireless broadband technologies to all Americans, including those residing in rural areas.

82. The Commission will permit bidding on 600 MHz reserve spectrum by regional and local service providers in all PEAs, including those where such a provider holds more spectrum than its 45 megahertz holding threshold of the available low-band spectrum. The Commission establishes a bright-line rule to address these issues for the same reasons set forth above for generally adopting bright line rules on spectrum aggregation issues for its 600 MHz Incentive Auction. Non-nationwide service providers enhance competitive choices for consumers in the mobile wireless marketplace, and help promote deployment in rural areas. They also present a significantly lower risk of effectively denying access of low band spectrum to competitors in order to foreclose competition or to raise rivals' costs because of their relative lack of resources. Accordingly, the Commission concludes that non-nationwide service providers should be eligible to bid on reserved spectrum in all markets nationwide.

83. In sum, to qualify to bid on reserved licenses in a PEA, an entity must not hold an attributable interest in 45 megahertz or more of below-1-GHz spectrum in a PEA, as described above, or must be a non-nationwide provider. The Commission will revise the short-form application to provide for a certification by an applicant intending to bid on reserved spectrum that it meets the qualification criteria. If any entity plans to file a pre-auction divestiture application to come into compliance with the below-1-GHz holdings threshold, it will have to file in sufficient time to qualify by the short-form application deadline.

3. Market-Based Amount of Reserved Spectrum

84. Because the Commission will not know the exact number of blocks licensed or their frequencies until the Incentive Auction concludes, the 600 MHz Band Plan in the *Incentive Auction Report and Order* adopted a set of band plan scenarios that comprise the 600 MHz Band Plan, one of which will serve as the ultimate Band Plan for the 600 MHz Band. Consistent with this approach, the Commission specifies in the chart below the maximum amount of licensed spectrum that will be reserved in each market for eligible entities (''reserve-eligible'' entities) in a forward auction for each indicated amount of licensed spectrum at initial stage spectrum clearing targets. A spectrum clearing target will include licensed spectrum and guard bands; the chart refers only to the amount of licensed spectrum included in each target because only licensed spectrum is relevant to determination of the reserve. Each stage of the Incentive Auction will consist of a reverse auction and a forward auction bidding process. Prior to the first stage, the Commission will determine the initial spectrum clearing target and will run additional stages if necessary. If the auction does not close in the initial stage, the maximum amount of reserved licensed spectrum in each individual market in subsequent stages will be the smaller of: (1) The maximum amount of reserved spectrum in the previous stage, or (2) the amount that the reserve-eligible bidders demand at the end of the previous stage. For example, if the initial clearing target is 100 megahertz, the maximum reserve will be 30 megahertz in the initial and subsequent stages. By contrast, if the initial spectrum clearing target is 60 megahertz, the maximum reserve in the initial and subsequent stages will be 20 megahertz. In either case, if the auction fails to close at the initial stage, the maximum reserved spectrum in each PEA at the second stage will be the smaller of the maximum reserve or the amount that reserve-eligible bidders demand at the end of the first stage in that market. Correspondingly, the amount of spectrum that an unreserved bidder may acquire in subsequent stages will depend on the amount that the bidder demanded at the end of the previous stage. The actual amount of spectrum reserved will depend on the demand by reserve-eligible bidders when the auction reaches a trigger (the ''spectrum reserve trigger''). Because the actual amount of reserved spectrum depends on auction participation, the Commission calls this a ''market-based spectrum reserve.''

[4] In the *16th Mobile Wireless Competition Report,* the Commission observed that there are four nationwide providers in the U.S. with networks that cover a majority of the population and land area of the country—Verizon Wireless, AT&T, Sprint, and T-Mobile. For purposes of this R&O, the Commission refers to other providers—with networks that are limited to regional and local areas—as ''non-nationwide providers.''

Licensed Spectrum In the Initial Clearing Target (in megahertz)	*100	90	70	60	50	40
Minimum Unreserved Spectrum	70	60	40	40	40	30
Maximum Reserved Spectrum	30	30	30	20	10	10

*The maximum amount of reserved licensed spectrum is 30 megahertz for initial clearing targets with more than 100 megahertz of licensed spectrum.

85. In determining how much reserved and unreserved spectrum will be available, the Commission balances a number of the key statutory directives, including promoting competition, facilitating the deployment of advanced services by making spectrum available for flexible use, and sharing the costs of the Incentive Auction on a fair and equitable basis. For the reasons explained above, the Commission finds that access to licenses for sufficient spectrum in the 600 MHz Band by providers that do not already hold licenses for significant amounts of below-1-GHz spectrum is important to the preservation and promotion of competition in the mobile wireless marketplace now and in the future. At the same time, however, the Commission recognizes that the structure of the Incentive Auction presents unique challenges to the adoption of a spectrum reserve for reserve-eligible bidders. In particular, because the Incentive Auction will rely on market forces to determine the amount of spectrum licenses that will be made available in the forward auction, the Commission needs to ensure that all bidders in the forward auction bear a fair share of the clearing costs identified in the reverse auction and the other costs specified in the Incentive Auction final stage rule.

86. The amount of reserved spectrum in the Incentive Auction will depend upon bidding in the forward auction. The Commission specifies a maximum amount of reserved spectrum in the chart above, but the actual amount of spectrum available only to reserve-eligible bidders will be determined at a spectrum reserve trigger that fairly distributes the responsibility for satisfying the costs of the Incentive Auction among all bidders.

87. The Commission will set the spectrum reserve trigger at the point when the final stage rule is satisfied, so that the actual amount of reserved spectrum will be based on the quantity demanded by reserve-eligible bidders in each individual market at that point in the forward auction. The amount of reserved spectrum will be the smaller of: (1) The maximum amount of reserved spectrum for that stage, or (2) the amount demanded by reserve-eligible bidders at the trigger. The Commission intends, after opportunity for comment in the Incentive Auction Comment PN, to clarify that reserve-eligible bidders will not be able to acquire more than 20 megahertz of reserved spectrum in a market unless there is another bidder for reserved spectrum in that market. Until the spectrum reserve trigger is met, bidding for licenses in the forward auction will not distinguish between licenses for reserved and unreserved spectrum. Accordingly, all bidders will compete for generic licenses in each area—with a single price applying in each area to all the licenses in a category of generic licenses—up to the point at which the spectrum reserve trigger is reached.

88. *Maximum Amount of Reserved Spectrum.* The Commission sets the maximum amount of reserved spectrum at 30 megahertz for most of the potential amounts of total licensed spectrum made available in the forward auction. Setting the maximum amount of reserved spectrum at a consistent amount across most levels of total licensed spectrum will, among other things, facilitate the repurposing of more spectrum in the 600 MHz Band, because it provides the opportunity, and creates incentives, for all auction participants to bid aggressively to acquire more spectrum licenses as the total amount of available spectrum increases.

89. A 30 megahertz maximum spectrum reserve at most band clearing scenarios also benefits competition and consumers by giving reserve-eligible bidders the assurance that, after the spectrum reserve trigger is reached, they will have a greater opportunity to purchase licenses in the 600 MHz Band. At the same time, its initial maximum reserve amounts ensure that a majority of licenses at the beginning of the forward auction will be available for bidding by all participants under all circumstances. In the *Incentive Auction Report and Order,* the Commission determined that the 600 MHz Band will be licensed in 10 megahertz (5x5 paired) blocks. Some providers have advocated that 20 megahertz of contiguous spectrum is particularly valuable for the deployment of next-generation networks. A maximum of 30 megahertz of reserved spectrum could permit at least two reserve-eligible bidders to acquire 600 MHz spectrum licenses for deployment of next-generation networks, with one of the bidders potentially acquiring 20 megahertz of reserved spectrum for such deployment. Moreover, a maximum of 30 megahertz of reserved spectrum, an odd number of 10-megahertz blocks, will facilitate competition among bidders seeking to acquire 20 megahertz. In addition, at most levels of total licensed spectrum made available in the forward auction, a maximum of 30 megahertz of reserved spectrum will leave a significant amount of unreserved spectrum available, for which all bidders will have the opportunity to compete.

90. Accordingly, a maximum spectrum reserve of 30 megahertz for most levels of total available spectrum licenses, on balance, will make additional low-band spectrum available to multiple providers; ensure that all bidders have an opportunity to acquire a stake in the 600 MHz ecosystem that will be critical in the future; and facilitate competitive bidding. However, if the amount of licensed spectrum at the initial stage target is less than 70 megahertz, maintaining a maximum of 30 megahertz of reserved spectrum would not be in the public interest. Maintaining that amount of reserved spectrum would potentially reduce the amount of unreserved spectrum to 20 or even 10 megahertz, which the Commission deemed to be too low to provide all bidders with an adequate opportunity to acquire licenses in the 600 MHz Band.

91. *Market-Based Spectrum Reserve.* Under the market-based spectrum reserve rule, the amount of reserved spectrum in each individual PEA will be set at the level demanded by reserve-eligible entities at the time the spectrum reserve trigger is satisfied, up to the maximum amount of reserved spectrum at the beginning of the stage. Once the spectrum reserve is established, bidders will bid separately for generic reserved and unreserved spectrum licenses, with reserve-eligible bidders able to bid for spectrum in either category, and the other bidders able to bid only for the unreserved spectrum. For instance, if the spectrum reserve trigger is met in a stage with a maximum of 30 megahertz of reserved spectrum, if reserve-eligible bidders demand only 20 megahertz in a

given PEA at those prices when the trigger is met, then 20 megahertz will be reserved.

92. The market-based reserve rule would not prevent unreserved bidders from acquiring the minimum initial stage amount of unreserved spectrum specified in the chart above in subsequent stages of the auction, provided they bid actively on that amount of spectrum throughout the auction, beginning in the first stage. For example, if an unreserved bidder demands 20 megahertz throughout the initial stage (including the extended round) but the stage fails, that bidder will be eligible to bid for 20 megahertz in the next stage. The Commission anticipates that bidding in the most urban areas is likely to be the most intense, with the highest bids, and thus that the spectrum reserve trigger mechanism the Commission ultimately adopted will mean that reserved spectrum in those areas will sell only at substantial prices.

93. The market-based reserve rule the Commission adopts balances the need to meet the requirements for concluding the Incentive Auction with the competition goals discussed above. Setting an appropriate spectrum reserve trigger for determining how much spectrum will be allotted for reserve-eligible bidders will ensure that all bidders, those eligible to bid on reserved spectrum and other bidders, contribute a fair share to the clearing costs identified in the reverse auction and the other costs specified in the Incentive Auction final stage rule. The market-based spectrum reserve leverages competition across both reserved and unreserved spectrum to provide all bidders with the incentive to bid aggressively and repurpose larger rather than smaller amounts of spectrum. Further, the contingent nature of the reserve will create reserves only in PEAs where there is sufficient demand at the point where the spectrum reserve trigger is reached. This will ensure spectrum is reserved only where there is demand at market-based prices and increase the likelihood that the auction will close at a higher spectrum target.

94. In the coming months, the Commission will solicit public input in the *Incentive Auction Comment PN* on procedures for implementing certain auction-related decisions made in the *Incentive Auction Report and Order.* Among other things, the *Comment PN* will seek comment on how to establish the details of a spectrum reserve trigger based on the final stage rule, in order to fairly distribute the responsibility for satisfying the costs of the reverse auction among all bidders. Among other things, the Commission will consider whether the trigger should be based solely on prices or revenues in the ''major markets'' and, if so, how to identify such markets. The *Procedures PN* will adopt the details of its spectrum reserve trigger at the same time that the Commission establishes final auction procedures and resolves crucial auction design issues, including the benchmarks required to implement the final stage rule, opening prices, and how much market variation to accommodate in the 600 MHz Band Plan.

4. Holding Period for 600 MHz Band Licenses

95. The Commission finds that certain restrictions on secondary market transactions of 600 MHz Band licenses are necessary in certain circumstances. These secondary market restrictions for 600 MHz Band licenses will not apply to exchanges of equal amounts of 600 MHz Band spectrum in the same market.

96. First, the Commission recognizes that its goal in adopting the spectrum reserve—facilitating access to 600 MHz Band licenses in order to ensure against excessive concentration in holdings of low-band spectrum—could be undermined if entities that would not be permitted to acquire reserved 600 MHz Band licenses in the auction are permitted to acquire them after the auction through secondary markets. The risk of undermining its goals for competition and the Incentive Auction must be balanced, however, against the Commission's general policy of promoting flexibility in secondary markets transactions. The Commission finds that precluding secondary market transactions of 600 MHz Band licenses for six years, which represents the interim buildout period for 600 MHz licenses, strikes the appropriate balance to preserve the integrity of its market-based spectrum reserve while still permitting some flexibility in secondary markets transactions. Accordingly, the Commission concludes that, for a period of six years, entities that acquired reserved spectrum licenses in the Incentive Auction cannot assign or transfer those licenses to, or enter into long-term leases regarding those licenses with, entities that would not have been in compliance with the reserve-eligible entity requirements on the date the short form application was due for the Incentive Auction.

97. In addition, the Commission notes that its decision to adopt a holding period reflects its continuing efforts to avoid excessive concentration of licenses not only as a result of the Incentive Auction, but also to ensure that secondary market transactions do not frustrate the underlying public interest goals of its mobile spectrum holdings policies for this band. Aggregation of 600 MHz Band spectrum by means of secondary market transactions has the potential to further exacerbate its concerns about below-1-GHz spectrum license concentration, which must be balanced against the Commission's general policy of promoting flexibility in secondary market transactions. Accordingly, the Commission will prohibit any transfer, assignment, or long-term leasing of any 600 MHz Band licenses (including unreserved 600 Band licenses) for a period of six years post-auction that would result in the acquiring entity holding approximately one-third or more of suitable and available below-1-GHz spectrum post-transaction. Given that this limit is a bright-line prohibition, the acquiring entity's below-1-GHz spectrum holdings will be determined by a population-weighted methodology.

5. Further Implementation Issues

98. The Commission will seek comment in the *Incentive Auction Comment PN* on any further implementation issues that may affect its market-based spectrum reserve, and whether and if so how the policies and rules the Commission adopted should apply or be adjusted based on any auction details that might be relevant to the process (e.g., auctioning impaired spectrum blocks). The Commission will resolve any relevant further implementation in the *Incentive Auction Procedures PN.*

6. Legal Authority

99. Section 6404 of the Spectrum Act, codified at 47 U.S.C. 309(j)(17), provides that the Commission may not ''prevent'' a person who is otherwise qualified from ''participating in a system of competitive bidding'' under Section 309(j). However, Section 6404 further provides that ''[n]othing in [the foregoing restriction] affects any authority the Commission has to adopt and enforce rules of general applicability,'' including without limitation ''rules concerning spectrum aggregation that promote competition.''

100. The Commission finds that its adoption of reserved spectrum for the Incentive Auction is fully consistent with its authority under Title III and the Spectrum Act. The market-based spectrum reserve that the Commission adopted are ''rules of general applicability'' that fall under the Spectrum Act's savings clause codified at 47 U.S.C. 309(j)(17)(B). The term

''rule of general applicability'' is a term of art; it has an established meaning under the Administrative Procedure Act. ''In the absence of contrary indication, the Commission assumes that when a statute uses . . . a term [of art], Congress intended it to have its established meaning.'' The established meaning of the term ''rule of general applicability'' is a rule that is not party-specific, that is, not a ''rule of particular applicability.'' It is to be contrasted with, for example, a named telephone company's rate of return. The rule that the Commission adopted would be triggered by the amount of an entity's below-1-GHz spectrum holdings; depending upon the particular geographic market, eligibility to bid for the reserved spectrum may vary. And the mere fact that, in a particular PEA, a specific person would not be so eligible does not render the rule one of particular applicability. Even a general rule must have potential particular effect—otherwise every rule would be ineffective. For similar reasons, it need not apply on an industry-wide basis, or apply to all Commission auctions. Because the rule that the Commission adopted applies to any entity that has the general characteristics identified in the rule, the rule is not party-specific.

101. In addition, by expressly stating that ''[n]othing in subparagraph (A) affects any authority the Commission has to adopt and enforce . . . rules concerning spectrum aggregation that promote competition[,]'' Section 309(j)(17)(B) preserves the Commission's long-standing authority under Title III of the Communications Act to adopt ''rules concerning spectrum aggregation that promote competition.'' Over the past three decades that the Commission has licensed mobile wireless spectrum, Title III authority has been the basis for several restrictions that the Commission has adopted regarding spectrum aggregation, including *ex ante* limitations. The Court of Appeals for the District of Columbia Circuit has affirmed that Title III grants the Commission ''expansive authority'' to regulate mobile wireless licenses, and that authority includes its power to regulate spectrum concentration in mobile wireless markets.

102. Because the rules the Commission adopted today fall squarely under the historical authority of the Commission under Title III as preserved by subparagraph (B), the new prohibition created in subparagraph (A) is not applicable. In other words, the Commission interprets Section 6404 to preserve the Commission's authority to adopt rules of general applicability regarding spectrum aggregation, without regard to whether such rules prevent participation in a system of competitive bidding.

103. Even if subparagraph (A) were to apply to an *ex ante* reservation of spectrum, the market-based spectrum reserve that the Commission adopted does not violate that provision because it would not ''prevent'' any entity ''from participating'' in a ''system of competitive bidding.'' Supreme Court precedent compels us to interpret these terms according to their ordinary meaning. The ordinary meaning of ''prevent'' is ''to stop someone from doing something,'' and the ordinary meaning of ''participate'' is ''to take part'' or ''to have a part or a share in something.'' Thus, the ordinary meaning of the phrase ''prevent . . . from participating,'' in context, is that the Commission may not stop a person who is otherwise qualified from taking part in a system of competitive bidding.

104. The term ''a system of competitive bidding'' is also a term of art that refers broadly to the process for granting licenses through competitive bidding, including, identifying classes of licenses to be assigned by auction, specifying eligibility and other characteristics of such licenses, and designing the methodologies to be used for competitive bidding for particular licenses. Thus, participation in a ''system of competitive bidding'' does not mean that every entity must be able to participate in the bidding for every single license or spectrum block that may be available in an auction.

105. The market-based spectrum reserve the Commission adopted will permit all bidders to bid for some spectrum licenses in every market, while reserving certain spectrum blocks for providers with existing holdings of below-1-GHz spectrum of less than 45 megahertz. In a single PEA, under every band scenario there will be at least as much unreserved as reserved spectrum, and in some scenarios from two to three times as much. Its action will satisfy its statutory mandate to promote very broad participation in its systems of competitive bidding by current providers of mobile services and potential entrants into the wireless data and telephony marketplace.

106. Finally, the Commission determined that it is clear from the plain text of Section 309(j)(B)(17) that the Commission has the authority to adopt the market-based spectrum reserve in its design of a system of competitive bidding. Accordingly, the Commission concluded that the market-based spectrum reserve that the Commission adopted does not prevent any person from participating in its system of competitive bidding in a manner contrary to the Spectrum Act.

107. The Commission disagrees with arguments that it did not provide adequate notice under the APA. First, the Commission inquired about an ex ante restriction in the *Incentive Auctions NPRM,* observing that ''section 309(j)(3)(B)'s direction to avoid excessive concentration of licenses might militate in favor of a rule that permits any single participant in the auction to acquire no more than one-third of all 600 MHz spectrum being auctioned in a given license area.'' The rule that the Commission adopted is a ''variatio[n] of that approach,'' on which the Commission also sought comment. It would prevent providers in certain circumstances from bidding on reserved 600 MHz spectrum in some PEAs in the Incentive Auction. However, all providers will be permitted to bid on more than one-third of the available spectrum in any PEA. In addition, the Commission specifically asked about adoption of a bright-line limits approach in the *Mobile Spectrum Holdings NPRM,* including limits on holdings below 1 GHz and band-specific limits. Applying a 600 MHz limit applicable only to bidders with significant holdings below 1 MHz also is a logical outgrowth of issues identified in the NPRM. Where the Commission asked about a one-third limit, it did so ''[a]s [an] example.'' The Commission finds that the market-based spectrum reserve the Commission adopted is consistent with the Spectrum Act and with its general authority under Title III and was adequately noticed under the APA.

C. AWS–3 Auction

108. In the *Mobile Spectrum Holdings NPRM,* the Commission sought comment on whether to adopt limits on the amount of spectrum that entities could acquire in the context of spectrum auctions mandated by the Spectrum Act. In the *AWS–3 NPRM,* the Commission sought comment on whether and how to address the mobile spectrum holdings issues to meet its statutory requirements pursuant to section 309(j)(3)(B) and its goals for the AWS–3 bands.

109. The Commission finds that, on balance, it is not in the public interest to adopt a band-specific mobile spectrum holdings limit for the AWS–3 auction. Nothing in the record indicates that without such a limitation, opportunities for access to spectrum with similar characteristics would be significantly constrained. In particular, the Commission emphasizes the availability of a substantial amount of

comparable high-band spectrum to competitors and the significant existing holdings of multiple providers of comparable spectrum. In addition, with rising demand for mobile broadband services, increasing network capacity is important to all providers, and above-1-GHz spectrum is particularly suitable for such needs. The 65 megahertz of AWS–3 spectrum that the Commission plans to auction have the potential to allow for greater network capacity for all providers to meet this demand.

110. The Commission notes that multiple providers currently have access to bands comparable to AWS–3. Moreover, each of the four nationwide providers holds a significant amount of this spectrum. This is unlike the case with the 600 MHz Band, which has fewer ''coverage band'' substitutes (700 MHz and 800 MHz). Moreover, in contrast to bands comparable to AWS–3, the bands comparable to the 600 MHz Band are held by a limited number of service providers. Accordingly, while it is necessary to adopt a 600 MHz Band specific spectrum holding policy, such an approach is not necessary for the AWS–3 auction.

IV. Secondary Market Transactions

111. The Commission articulated its framework for a case-by-case review for the first time in analyzing the *Cingular-AT&T Wireless* transaction in 2004. In particular, in that context and in its analysis of subsequent proposed transactions, the Commission used an initial screen to help identify for case-by-case review local markets where changes in spectrum holdings resulting from the transaction may be of particular concern. For transactions that result in the acquisition of wireless business units and customers or change the number of firms in any market, the Commission also applies an initial screen based on the size of the post-transaction HHI of market concentration and the change in the HHI. As set out in various transactions orders, however, the Commission has not limited its consideration of potential competitive harms solely to markets identified by its initial screen, if it encounters other factors, such as increased aggregation of below-1-GHz spectrum that may bear on the public interest inquiry.

112. The Commission finds that it is in the public interest to retain its current case-by-case review for secondary market transactions. The Commission will also retain its current product and geographic market definitions. The Commission will continue to apply the spectrum screen on a county-by-county basis to identify those CMAs where an entity would hold approximately one-third or more of the total spectrum that is suitable and available for the provision of mobile telephony/broadband services post-transaction, and will evaluate these markets for any competitive harm. Further, the Commission will continue to evaluate the likely competitive effects of increased aggregation of below-1-GHz spectrum, and in particular, will pay specific attention to those markets in which a proposed transaction would result in a service provider holding approximately one-third or more of suitable and available below-1-GHz spectrum post-transaction. Moreover, the Commission finds that it is in the public interest not to limit its analysis of potential competitive harms to solely those markets identified by the initial screen, if the Commission encounters other factors that may bear on the public interest inquiry.

A. Case-by-Case Review vs. Bright Line Limits

113. In the *Mobile Spectrum Holdings NPRM,* the Commission observed that the case-by-case approach to proposed transactions review affords the Commission flexibility to consider the unique circumstances of a proposed transaction and the changing needs of the mobile wireless marketplace generally, and to tailor remedies to the specific harm and circumstances. At the same time, however, the Commission noted that case-by-case review is both time- and resource-intensive, and has been criticized for creating uncertainty as to whether a particular transaction will be approved. The Commission sought comment on the costs and benefits of its case-by-case review and whether the review of proposed transactions could be more transparent, predictable, or better tailored to promote its goals. The Commission asked if bright-line limits, similar to the CMRS spectrum cap eliminated in 2003, would better serve the public interest.

114. The Commission finds that it is in the public interest to continue to use its initial spectrum screen and case-by-case analysis to evaluate the likely competitive effects of increased spectrum aggregation through secondary market transactions, rather than to adopt a bright-line limit. It observes that the fundamental principles that the Commission articulated in eliminating the spectrum cap in favor of a case-by-case approach to transactions review continue to apply today. Moreover, in the context of transactions review, the Commission is concerned that *ex ante* limits on spectrum aggregation may prevent transactions that are in the public interest. The Commission has found that in reviewing secondary market transactions, the complex technical, strategic, and economic factors that determine the likely competitive effects of increased spectrum aggregation require a case-by-case assessment.

115. The Commission distinguishes its decision to retain case-by-case review for spectrum acquisitions through transactions from its determination above that any mobile spectrum holding limit applied to auctions should be a bright-line rule. The unique circumstances typically associated with spectrum auctions, particularly the time constraints and the need for certainty for each bidder regarding which licenses it would be permitted to acquire at the auction, make case-by-case analysis challenging in the auction context.

B. Market Definitions

116. The Commission considers whether to modify the current market definitions that the Commission uses in its competitive analysis for proposed secondary market transactions. The Commission concludes that it is in the public interest to retain the current product market definition and the current geographic market definition.

1. Relevant Product Market

117. *Background.* In its recent transaction orders, the Commission has determined that the relevant product market is a combined ''mobile telephony/broadband services'' product market that comprises mobile voice and data services, including mobile voice and data services provided over advanced broadband wireless network (mobile broadband services).

118. In the *Mobile Spectrum Holdings NPRM,* the Commission sought comment on whether the product market definition should be modified to reflect differentiated service offerings, devices and contract features, for instance, or whether smaller sub-markets should be defined within a larger market. The Commission also sought comment on the costs and benefits of any potential modifications.

119. The Commission retains the current product market definition. The Commission does not find sufficient evidence in the record to support a change in the current product market definition. The Commission finds that the current product market definition, ''mobile telephony/broadband services,'' continues to encompass the mobile voice and data services that are provided today, and is sufficiently flexible to reflect emerging, next-

generation wireless services. The Commission did not find evidence in the record to convince us that the current definition has been defined too broadly or too narrowly for purposes of its competitive analysis. As set out in prior transactions, the product market the Commission defined encompasses differentiated services (e.g., voice-centric or data-centric), devices (e.g., feature phone, smartphone, tablet, etc.), and contract features (e.g., prepaid vs. postpaid). While such distinctions may suggest the possibility of smaller markets nested within that larger product market, the Commission finds it unnecessary to define such smaller product markets in order to analyze the potential competitive effects of secondary market transactions. The Commission will continue to consider these aspects of product differentiation, as appropriate, when the Commission analyzes the competitive effects of the proposed secondary market transaction within the markets the Commission defined. Therefore, the Commission finds it is in the public interest to retain the current product market definition.

2. Relevant Geographic Market

120. In its recent transactions orders, the Commission has found that the relevant geographic markets for certain wireless transactions generally are local, while also evaluating a transaction's competitive effects at the national level where a transaction exhibits certain national characteristics that provide cause for concern. In the *Mobile Spectrum Holdings NPRM,* the Commission sought comment on the appropriate geographic market definition to use when evaluating a licensee's mobile spectrum holdings, under either its current case-by-case analysis or if bright-line limits were adopted.

121. The Commission finds for purposes of evaluating the competitive effects of proposed transactions it will continue to use local geographic markets, but also will analyze potential national effects as appropriate. The Commission continues to find that most consumers use their mobile telephony/broadband services at or close to where they live, work, and shop, in support of its decision that local markets are the relevant geographic markets in which to analyze the potential for competitive harms as a result of certain wireless transactions. Certain elements of the provision of mobile wireless services are national in scope, including key variables such as pricing, development of equipment, and service plan offerings, and nothing in the record suggests that the basis for this finding has changed. The Commission also will continue therefore to analyze the potential competitive effects of those wireless transactions that exhibit national characteristics, such as increased spectrum aggregation in many local markets across the country with the implication that harms that may occur at the local level collectively could have nationwide competitive effects.

C. Applicable Spectrum Holdings Threshold

122. In 2004 the Commission established a spectrum screen threshold of approximately one-third of suitable and available spectrum that would be held by the acquiring entity post-transaction. In the *Mobile Spectrum Holdings NPRM,* the Commission sought comment on whether one-third is still the appropriate threshold generally, and whether a higher threshold should apply in rural areas.

123. The Commission will retain the approximately one-third threshold for applying its initial spectrum screen. Based on its experience in applying this threshold in numerous transactions over the last decade, the Commission has found it to be an effective analytical tool in helping to identify individual markets where a proposed transaction may raise particular competitive concerns. In its application of the screen, the Commission includes not only the entity's licensed spectrum, on a county-by-county basis, but also all long term spectrum leasing arrangements, with spectrum being attributed to both the lessee and lessor.

124. The Commission finds that even where one entity holds approximately one-third of suitable and available spectrum, a market may contain more than three viable competitors. Its goal is not to equalize the amount of spectrum held by each competitor in each market. Increasing the threshold, would not be in the public interest.

125. The Commission also disagrees with AT&T's assertion that the Commission can increase the spectrum screen threshold because the costs of ''false positive'' errors—chilling innovation and investment, and an inefficient use of the Commission's resources—outweigh the costs of ''false negative'' errors because spectrum acquisitions that would harm competition would be remedied by other Federal agencies (e.g., DOJ). As the Commission previously has stated in the context of orders addressing proposed transactions, its competitive analysis, which forms an important part of the public interest evaluation, is informed by, but not limited to, traditional antitrust principles.

126. In addition, the Commission declines to adopt a spectrum screen threshold based on spectrum share HHIs finding that to do so would mark a substantial departure from its traditional approach that is not supported by the record. The Commission does not believe the record demonstrates the efficacy of applying an HHI analysis to an input market, and believes establishing such a requirement would be burdensome and create substantial uncertainty.

127. The Commission declines to establish a higher spectrum screen threshold for rural markets. In rural areas there are significant benefits to consumers of facilitating access by multiple providers to sufficient spectrum, such that they are able to provide an effective competitive constraint. To the extent there are unique considerations in a particular rural market such that spectrum aggregation above the spectrum screen is in the public interest; its case-by-case analysis provides the Commission the flexibility to approve such a transaction.

128. Accordingly, the Commission will continue to apply an approximately one-third spectrum screen threshold in its review of secondary market spectrum acquisitions. Specifically, the modified spectrum screen the Commission adopted would include 580.5 megahertz of spectrum, with a trigger of 194 megahertz, or approximately one-third of the suitable and available spectrum. The spectrum screen is triggered where the Applicants would have, on a county-by-county basis, an attributable interest in 194 megahertz or more of spectrum where both AWS–1 and BRS/EBS spectrum are available in the particular market. If AWS–1 and/or BRS/EBS spectrum are not available in that market, these bands are not counted for purposes of applying the spectrum screen trigger in that market.

D. Operation of the Spectrum Screen

129. As set out in various transactions orders, the Commission has not limited its consideration of potential competitive harms solely to markets identified by its initial screen, if it encounters other factors that may bear on the public interest inquiry. For example, the Commission has considered below-1-GHz concentration, and concentration within a particular spectrum band, including a band that was not at the time included in the spectrum screen. In the *Mobile Spectrum Holdings NPRM,* the Commission sought comment on establishing a higher burden of proof for

the approval of proposed transactions that would exceed the relevant spectrum threshold.

130. The Commission will continue to review on a case-by-case basis those markets in which an entity would exceed the initial spectrum screen if the transaction as proposed were approved. The Commission declines to establish a rebuttable presumption, finding it would unnecessarily limit the Commission's flexibility. Further, the Commission affirms the Commission's conclusions that its consideration of potential competitive harms resulting from a proposed spectrum acquisition in the secondary market should not be limited solely to markets identified by the initial screen, if the Commission encounters other factors that may bear on its public interest inquiry. For instance, the Commission has specifically analyzed the potential competitive effects of aggregation of spectrum below 1 GHz. The Commission finds, in light of current marketplace conditions, that access by multiple service providers to sufficient spectrum below 1 GHz will preserve and promote competition in the mobile wireless marketplace to the benefit of American consumers, and therefore find that further significant aggregation of below-1-GHz spectrum holdings in secondary market transactions will be subject to enhanced review in its case-by-case competitive evaluation, as discussed below.

131. While the Commission recognizes that a safe harbor would provide greater certainty to applicants, just as a bright-line limit would provide greater certainty, the Commission finds that in the context of secondary market transactions, it is in the public interest to maintain flexibility to consider any factors presented that may bear on our review. Moreover, in the absence of such flexibility, the Commission's review of future proposed transactions would be limited by its understanding of technology and industry practices at the time it adopted the specific thresholds. The Commission finds that its articulation of factors it will consider in its case-by-case analysis as set forth below provides sufficient clarity to potential applicants, while maintaining flexibility to consider changes in technology and industry practices in the rapidly-evolving mobile wireless marketplace.

132. The Commission distinguishes its decision not to adopt a safe harbor for case-by-case review of spectrum acquisitions through transactions from its determination above that any mobile spectrum holdings limit applied to auctions should be a bright-line rule. The unique circumstances typically associated with spectrum auctions, particularly the time constraints and the need for certainty for each bidder regarding which licenses it would be permitted to acquire at the auction, make case-by-case analysis challenging in the auction context.

E. Nationwide Screen

133. In the *Mobile Spectrum Holdings NPRM,* the Commission sought comment on whether, in addition to the spectrum screen applied on a county-by-county basis in helping to identify local markets of particular competitive concern, it should also adopt a separate screen that would be applied on a nationwide basis.

134. The Commission declines to establish a separate screen as a means to evaluate spectrum holdings at the nationwide level. The Commission finds it would either be redundant or create irrational incentives for providers to divest or to forego acquisition of spectrum in markets in which there would be a net public benefit from such an acquisition. However, as certain elements of the provision of mobile wireless services are national in scope, including key variables such as pricing, development of equipment, and service plan offerings, the Commission will continue to analyze the potential competitive effects of those secondary market transactions that exhibit national characteristics. Increased spectrum aggregation in many local markets across the country may imply that harms that occur at the local level collectively could have nationwide competitive effects. The Commission finds that it is in the public interest to continue to define local geographic markets but also to analyze potential national effects as appropriate.

F. Distinguishing among Spectrum Bands for Transactions Review

135. In recent years, the Commission has considered below-1-GHz spectrum concentration as a factor in its review of spectrum acquisitions in the secondary market. In the *Mobile Spectrum Holdings NPRM,* the Commission sought comment on whether it should adopt a separate screen for below-1-GHz spectrum under which an entity that would hold, post-transaction, approximately one-third or more of the relevant spectrum below 1 GHz in a geographic market would be subject to a more detailed competitive review in that market. The Commission also sought comment on whether, alternatively, it should establish a bright-line limit for spectrum holdings below 1 GHz, whether it should assign different weights to each of the spectrum bands as part of its case-by-case review, or whether it should take any other action to recognize distinctions between spectrum bands in its competitive review of proposed transactions.

136. The Commission declines to adopt a separate screen or bright-line limit for below-1-GHz spectrum holdings, or a set of weighting factors for each spectrum band included in its initial spectrum screen. Post-transaction below-1-GHz spectrum holdings will be an enhanced factor under its case-by-case review.

1. Below-1-GHz Limit

137. Several commenters assert that the Commission should supplement the total spectrum screen applied to transactions with a screen or a bright-line limit for below-1-GHz spectrum, ranging from 25 percent to 40 percent.

138. The Commission adopts a market-based spectrum reserve for the Incentive Auction and to set limitations on the assignment or transfer of 600 MHz licenses after the Incentive Auction. These actions will help to ensure that multiple providers are able to access a sufficient amount of low-band spectrum, which will facilitate the extension and improvement of service in both rural and urban areas, to the benefit of consumers. In light of these actions, the Commission concludes that it is not necessary at this time to adopt a separate screen or cap applicable to its evaluation of the assignment or transfer of below-1-GHz spectrum. Nonetheless, the Commission will continue to evaluate below-1-GHz holdings as a factor in its case-by-case review of such transactions, consistent with the Commission's precedent in the past few years. Moving forward, post-transaction below-1-GHz spectrum holdings will become an enhanced factor in its competitive evaluation, as discussed below, and therefore, the Commission will apply particular focus to its review of this factor as the Commission evaluated the likelihood of potential competitive harms.

2. Spectrum Weighting

139. *Background.* Several commenters, including Sprint, assert that the Commission should weight spectrum bands to reflect the extent to which spectrum at that frequency yields lower costs for the deployment and operation of equipment. Other approaches to weighting raised on the record include using price data from spectrum auctions and secondary market transactions. Others contend that spectrum weighting would distort the

Commission's analysis of the competitive effect of proposed transactions and is otherwise impractical to implement. Sprint argues that weight spectrum should be based on the cost to deploy and operate using a particular band, arguing that low-band spectrum is typically significantly more cost-effective to deploy than higher-frequency spectrum.

140. The Commission finds that, in principle, spectrum weighting has the potential to enhance its competitive analysis of proposed spectrum acquisitions. However, the Commission concludes that, at this time, it cannot justify, on the basis of the record, adopting specific weighting factors for each spectrum band. Nonetheless, the Commission observes that the data submitted on the record does demonstrate that there are significant differences in deployment costs between low-band and high-band spectrum, and it is able to consider those differences as a key factor in its case-by-case analysis moving forward.

141. The Commission finds that to establish specific weighting factors for each spectrum band based on band-specific signal propagation characteristics raises certain issues, including the underlying assumptions that are appropriate to make. Further, the Commission finds that establishing specific weighting factors based on other factors, such as the ''value'' of the spectrum, also raises certain issues as prices paid at auction vary significantly over time based on a variety of factors not necessarily related to the characteristics of the spectrum being auctioned. The Commission finds that treating below-1-GHz spectrum concentration as an enhanced factor in its case-by-case analysis is a better approach at this time because it is able to distinguish between the characteristics of different frequency bands without imposing a weighting schema that may fail to accurately reflect their competitive significance. Based upon the record in this proceeding, the Commission concludes that adopting a spectrum weighting schema would not be in the public interest at this time.

G. Factors Considered in Competitive Analysis

142. *Background.* In its evaluation of proposed secondary market transactions, the Commission broadly assesses whether and to what extent proposed acquisitions of wireless spectrum could affect downstream competition in the mobile telephony/broadband services marketplace. In particular, the Commission's competitive analysis of wireless transactions focuses initially on those markets identified by the screen where the acquisition of customers and/or spectrum would result in significant concentration of either or both, and thereby could lead to competitive harm. As discussed above, however, the Commission has not limited its consideration of potential competitive harms solely to markets identified by its initial screen if it encounters other factors that may bear on the public interest inquiry. Specifically, the Commission has considered concentration of below-1-GHz holdings, and concentration of spectrum within a specific band.

143. In its transactions analyses, the Commission has considered various other factors that help to predict the likelihood of competitive harm post-transaction. These competitive variables include, but are not limited to: The total number of rival service providers; the number of rival firms that can offer competitive nationwide service plans; the coverage by technology of the firms' respective networks; the rival firms' market shares; the combined entity's post-transaction market share and how that share changes as a result of the transaction; the amount of spectrum suitable for the provision of mobile telephony/broadband services controlled by the combined entity; and the spectrum holdings of each of the rival service providers. The Commission notes that it is important to recognize that many transactions are more than spectrum transfers; they involve the disappearance of a separate business enterprise as an ongoing potential competitive constraint and source of innovations in services and marketing.

144. In the *Mobile Spectrum Holdings NPRM,* the Commission asked if it should adopt guidelines setting forth the factors that will be considered during any review of a licensee's mobile spectrum holdings or delegate authority to the Wireless Telecommunications Bureau to do so.

145. *Discussion.* The Commission retains the authority to consider all factors that could affect the likely competitive impact of proposed transactions, and declines to adopt a formal set of guidelines at this time. It does not find sufficient evidence in the record to support the adoption of the specific standards advocated by commenters regarding spectrum utilization or spectrum weighting. Nonetheless, the Commission retains the right to consider such factors in specific future transactions. In addition, parties are free to bring such matters to the Commission's attention. It affirms its continued use of the factors considered in the Commission's case-by-case analyses to date of the potential competitive impacts of further concentration of spectrum in particular markets. The Commission continues to hold the view that band concentration may be a relevant factor to consider in its case-by-case analysis, and recognize that changes in technology and the marketplace may result in band-specific concentrations warranting increased scrutiny.

146. Certain frequencies possess distinct characteristics for the provision of mobile wireless services, and a service provider is best positioned if it holds spectrum licenses for both low- and high-band spectrum. The Commission finds that spectrum holdings by service provider in the limited low- (i.e., below-1-GHz) bands have become particularly concentrated. The Commission has concerns about the potential effects of further concentration of below-1-GHz spectrum on competition and innovation in the mobile wireless services marketplace. The Commission decided not to adopt a separate below-1-GHz screen or cap at this time. Building on the Commission precedent in the past few years, however, it will treat certain further concentration of below-1-GHz spectrum as an enhanced factor in its case-by-case analysis of the potential competitive harms posed by individual transactions.

147. The Commission currently considers a variety of factors in its case-by-case analysis of spectrum acquisition through transactions–including, but not limited to the total number of rival service providers; the number of rival firms that can offer competitive service plans; the coverage by technology of the firms' respective networks; the rival firms' market shares; the amount of spectrum suitable for the provision of mobile telephony/broadband services controlled by the combined entity; the spectrum holdings of each of the rival service providers; the acquisition of below-1-GHz spectrum nationwide; and concentration in a particular band with an important ecosystem. In analyzing spectrum acquisitions based on these factors, the Commission generally determines, based on the totality of the circumstances, whether there is an increased ability or incentive for the acquiring firm to successfully raise prices or otherwise engage in anti-competitive behavior. The Commission then employs a balancing test weighing any potential public interest harms against any potential public interest benefits, and the applicants bear the burden of proving, by a preponderance of the evidence, that the proposed

transaction, on balance, will serve the public interest.

148. In implementing this approach going forward, the Commission anticipates that any entity that would end up with more than one third of below-1-GHz spectrum as a result of a proposed transaction would facilitate its case-by-case review with a detailed demonstration regarding why the public interest benefits outweigh harms. When the other factors the Commission ordinarily considers indicate a low potential for competitive or other public interest harm, the acquisition of below-1-GHz spectrum resulting in holdings of approximately one-third or more of such spectrum will not preclude a conclusion that a proposed transaction, on balance, furthers the public interest. Absent that, however, any transaction that would result in an entity holding approximately one-third or more of suitable and available below-1-GHz spectrum will more likely be found to cause competitive harm in its case-by-case review.

149. Consistent with its overall concerns about the potential public interest harms regarding the concentration of below-1-GHz spectrum, the Commission anticipates it likely would have even greater concerns where the proposed transaction would result in an assignee or transferee that already holds approximately one-third or more of below-1-GHz spectrum in a market acquiring additional below-1-GHz spectrum in that market, especially with regard to paired low-band spectrum. In these cases, the demonstration of the public interest benefits of the proposed transaction would need to clearly outweigh the potential public interest harms associated with such additional concentration of below-1-GHz spectrum, irrespective of other factors. For instance, applicants could provide a particularly detailed showing in such cases that they currently are maximizing the use of their spectrum and how the proposed transaction is necessary to maintain, enhance, or expand services provided to consumers. The Commission believes such a showing would be required to achieve its goal of ensuring that the ability of rival service providers to offer a competitive response to any price increase or to offer new innovative services is not eliminated or significantly lessened.

150. The Commission finds that considering additional below-1-GHz spectrum concentration as an enhanced factor in its review of secondary market transactions will help ensure that further concentration of such spectrum will not have adverse competitive effects either in particular local markets or on a broader regional or national level.

151. In addition, although the Commission declines to adopt specific weighting factors for each band, or for groups of bands, it recognizes that differences between spectrum bands can be relevant to a determination of the public interest in the context of reviewing transactions. It will consider such differences in its case-by-case review of specific transactions. For example, applications involving small amounts of high-band spectrum, particularly EBS spectrum, likely would present limited potential for public interest harms.

H. Remedies

152. In the *Mobile Spectrum Holdings NPRM,* the Commission sought comment on the remedies, including divestitures that would be appropriate for it to prevent competitive harm resulting from spectrum acquisitions. In particular, it sought comment on whether different approaches or types of divestures would best serve the Commission's goals, and whether the Commission should adopt different criteria for divestiture based on whether the spectrum to be divested is from lower or upper frequency bands or is immediately ''useable'' by another licensee. It sought comment on the extent to which the Commission should remedy the potential harms posed by a transaction by placing other conditions, such as, for example, requirements to offer leasing, roaming or collocation, in conjunction with, or in lieu of, requiring divestitures.

153. Based upon the record in this proceeding, the Commission believes it is unnecessary to change its existing approach to protecting and promoting the public interest, including competition, through the application of transaction-specific remedies. Its case-by-case analysis allows the Commission to carefully tailor remedies that address and ameliorate public interest harms or alternatively ensure that proposed public interest benefits are realized by consumers. The Commission does not believe, and the record does not indicate, that the narrowly-tailored, fact-specific remedies it has required in recent transactions have discouraged transactions that generally are in the public interest, and it does not conclude that any greater specificity with regard to remedies would significantly affect parties' willingness to enter into transactions. The Commission finds that the public interest benefits and public interest harms often are specific to each transaction, and that limiting possible remedies *ex ante* would undercut the benefits of case-by-case review, that is, the tailoring of the review, and remedies, to the specific circumstances of any given transaction. The Commission does not see any evidence in the record that the use of tailored remedies has inhibited competitiveness-enhancing transactions, and it finds that there are the pro-competitive effects of the Commission's policies on remediation. The Commission declines to limit possible remedial action as AT&T suggests. The Commission's public interest analysis, which considers the near and long-term competitive effects of spectrum aggregation, and which may have an impact beyond the local markets involved should not be limited to a particular geographic location or spectrum band in proposing remedies to protect the public interest.

V. Attribution of Interests in License Holdings

154. In the *Mobile Spectrum Holdings NPRM,* the Commission proposed to codify the attribution threshold and sought comment on proposed section 20.21 of the Commission's Rules, which would apply to mobile spectrum holdings. Pursuant to the proposal, all controlling interest and non-controlling interests of ten percent or more would be attributable. In addition, non-controlling interests of less than ten percent would be attributable if the Commission determined that the interest confers *de facto* control, including but not limited to partnership and other ownership interests and any stock interest in a licensee. The Commission also sought comment on whether to include a specific waiver provision if it codified the rule. In addition, consistent with its current practice, the Commission proposed to attribute long-term *de facto* transfer leasing arrangements and long-term spectrum manager leasing arrangements to the lessees, lessors, sublessees, and sublessors.

155. The Commission finds insufficient evidence in the record to support any modifications to its current practices for attribution. The Commission has developed its current practices over the years through its case-by-case review of secondary market transactions and related transfer of control applications. Therefore, the Commission finds that retaining the current ten percent attribution threshold will serve the public interest. Accordingly, all controlling interests and non-controlling interests of ten percent or more would be attributable. In addition, interests of less than ten

percent would be attributable if the interest confers *de facto* control, including but not limited to partnership and other ownership interests and any stock interest in a licensee. The Commission also codifies these rules for purposes of determining spectrum holdings amounts before an auction. The Commission finds that codifying the rules will provide additional transparency and clarity for applicants and prospective auction participants. The Commission also concludes that the general waiver standard provided in Section 1.925 of the Commission's rules provides sufficient guidance for applicants seeking to waive of these attribution rules.

156. Consistent with its current practice, the Commission also attributed long-term *de facto* transfer leasing arrangements and long-term spectrum manager leasing arrangements to the lessor and the lessee, including sublessors and sublessees. Spectrum leasing arrangement are arrangements between a licensed entity and a third-party entity in which the licensee leases certain of its spectrum usage rights in the licensed spectrum to the third-party entity, the spectrum lessee. Leasing provides lessees the flexibility to lease a small or large quantity of spectrum for short or longer time periods depending on their business needs. The Commission will attribute only the long-term spectrum leasing arrangements, with limited exceptions, to both lessee and lessor. The attribution rule will apply to determine partial ownership and other interests in spectrum holdings for purposes of: (1) Applying a mobile spectrum holding limit to the licensing of spectrum through competitive bidding; and (2) applying the initial spectrum screen to secondary market transactions. Consistent with current practices, if, after applying the initial screen, the Commission's analysis of a particular market reveals concerns with respect to attribution due to a particular organizational or financial relationship, it may evaluate such relationships in the context of the relevant secondary market transaction.

VI. Procedural Matters

A. Final Regulatory Flexibility Analysis

157. The Regulatory Flexibility Act (RFA) requires that agencies prepare a regulatory flexibility analysis for notice-and-comment rulemaking proceedings, unless the agency certifies that ''the rule will not have a significant economic impact on a substantial number of small entities.'' Accordingly, the Commission has prepared a Final Regulatory Flexibility Analysis (FRFA) concerning the possible impact of the rule changes contained in the *R&O* on small entities.

158. As required by the Regulatory Flexibility Act of 1980, as amended (RFA), an Initial Regulatory Flexibility Analysis (IRFA) was incorporated in the *Notice of Proposed Rulemaking.* The Wireless Telecommunications Bureau (WTB) sought written public comment on the proposals in the *Notice,* including comment on the IRFA. This present Final Regulatory Flexibility Analysis (FRFA) conforms to the RFA.

159. The Commission believes that it would serve the public interest to analyze the possible significant economic impact on small entities of the policy and rule changes in the R&O. Accordingly, this FRFA contains an analysis of this impact in connection with the adoption in the R&O of mobile spectrum holdings rule changes meant to protect and promote competition for the benefit of consumers, while facilitating greater transparency and predictability to better allow service providers to make investment and transactional decisions.

B. Need for, and Objectives of, the Report and Order

160. The Commission is under a Congressional mandate to manage spectrum to promote economic opportunity, competition, innovation, and service accessibility. In the wake of recent industry trends, both in service evolution and marketplace structure, the Commission has revisited its mobile spectrum holdings rules and policies. The Commission adopts several mobile spectrum holdings policies today: Entering the spectrum screen into FCC rules; specifying which spectrum blocks are included in the spectrum screen; replacing case-by-case, post-auction spectrum screen analysis with consideration of auction specific spectrum limits; and reserving a certain amount of 600 MHz spectrum in order to ensure against excessive concentration in holdings of below-1-GHz spectrum. These policies will promote consumer choice and competition among multiple service providers, and consistent with its statutory mandate, will promote the efficient and intensive use of scarce spectrum as well as maximizing economic opportunity and the deployment of innovative technologies. The Commission seeks to minimize the risk of the lessening of competition in the future due to the likelihood that an insufficient number of service providers would have access to the mix of low- and high-band spectrum needed to ensure robust competition in the mobile wireless marketplace.

B. Summary of Significant Issues Raised by Public Comments in Response to the IRFA

161. There were no comments filed that specifically addressed the rules and policies proposed in the IRFA.

C. Description and Estimate of the Number of Small Entities to Which the Proposed Rules Would Apply

162. The RFA directs agencies to provide a description of, and, where feasible, an estimate of, the number of small entities that may be affected by the rules adopted herein. The RFA generally defines the term ''small entity'' as having the same meaning as the terms ''small business,'' ''small organization,'' and ''small governmental jurisdiction.'' In addition, the term ''small business'' has the same meaning as the term ''small business concern'' under the Small Business Act. A ''small business concern'' is one which: (1) Is independently owned and operated; (2) is not dominant in its field of operation; and (3) satisfies any additional criteria established by the Small Business Administration (SBA).

163. Small Businesses, Small Organizations, and Small Governmental Jurisdictions. Its action may, over time, affect small entities that are not easily categorized at present. The Commission therefore describes here, at the outset, three comprehensive, statutory small entity size standards. First, nationwide, there are a total of approximately 27.5 million small businesses, according to the SBA. In addition, a ''small organization'' is generally ''any not-for-profit enterprise which is independently owned and operated and is not dominant in its field.'' Nationwide, as of 2007, there were approximately 1,621,315 small organizations. Finally, the term ''small governmental jurisdiction'' is defined generally as ''governments of cities, towns, townships, villages, school districts, or special districts, with a population of less than fifty thousand.'' Census Bureau data for 2011 indicate that there were 89,476 local governmental jurisdictions in the United States. The Commission estimates that, of this total, as many as 88,506 entities may qualify as ''small governmental jurisdictions.'' Thus, the Commission estimates that most governmental jurisdictions are small.

164. Cellular Licensees. The SBA has developed a small business size standard for small businesses in the category ''Wireless Telecommunications Carriers (except satellite).'' Under that SBA category, a business is small if it has 1,500 or fewer employees. The

census category of ''Cellular and Other Wireless Telecommunications'' is no longer used and has been superseded by the larger category ''Wireless Telecommunications Carriers (except satellite).'' The Census Bureau defines this larger category to include ''establishments engaged in operating and maintaining switching and transmission facilities to provide communications via the airwaves. Establishments in this industry have spectrum licenses and provide services using that spectrum, such as cellular phone services, paging services, wireless Internet access, and wireless video services.''

165. In this category, the SBA has deemed a wireless telecommunications carrier to be small if it has fewer than 1,500 employees. For this category of carriers, Census data for 2007, which supersede similar data from the 2002 Census, shows 1,383 firms in this category. Of these 1,383 firms, only 15 (approximately 1%) had 1,000 or more employees. While there is no precise Census data on the number of firms in the group with fewer than 1,500 employees, it is clear that at least the 1,368 firms with fewer than 1,000 employees would be found in that group. Thus, at least 1,368 of these 1,383 firms (approximately 99%) had fewer than 1,500 employees. Accordingly, the Commission estimates that at least 1,368 (approximately 99%) had fewer than 1,500 employees and, thus, would be considered small under the applicable SBA size standard.

166. Wireless Telecommunications Carriers (except satellite). This industry comprises establishments engaged in operating and maintaining switching and transmission facilities to provide communications via the airwaves. Establishments in this industry have spectrum licenses and provide services using that spectrum, such as cellular phone services, paging services, wireless Internet access, and wireless video services. The appropriate size standard under SBA rules is for the category Wireless Telecommunications Carriers. The size standard for that category is that a business is small if it has 1,500 or fewer employees. For this category, census data for 2007 show that there were 11,163 establishments that operated for the entire year. Of this total, 10,791 establishments had employment of 999 or fewer employees and 372 had employment of 1,000 employees or more. Thus under this category and the associated small business size standard, the Commission estimates that the majority of wireless telecommunications carriers (except satellite) are small entities that may be affected by its proposed action.

167. 2.3 GHz Wireless Communications Services. This service can be used for fixed, mobile, radiolocation, and digital audio broadcasting satellite uses. The Commission defined ''small business'' for the wireless communications services (''WCS'') auction as an entity with average gross revenues of $40 million for each of the three preceding years, and a ''very small business'' as an entity with average gross revenues of $15 million for each of the three preceding years. The SBA approved these definitions. The Commission conducted an auction of geographic area licenses in the WCS service in 1997. In the auction, seven bidders that qualified as very small business entities won 31 licenses, and one bidder that qualified as a small business entity won a license.

168. 1670–1675 MHz Services. This service can be used for fixed and mobile uses, except aeronautical mobile. An auction for one license in the 1670–1675 MHz band was conducted in 2003. The Commission defined a ''small business'' as an entity with attributable average annual gross revenues of not more than $40 million for the preceding three years, which would thus be eligible for a 15 percent discount on its winning bid for the 1670–1675 MHz band license. Further, the Commission defined a ''very small business'' as an entity with attributable average annual gross revenues of not more than $15 million for the preceding three years, which would thus be eligible to receive a 25 percent discount on its winning bid for the 1670–1675 MHz band license. The winning bidder was not a small entity.

169. 3650–3700 MHz Band Licensees. In March 2005, the Commission released an order providing for the nationwide, non-exclusive licensing of terrestrial operations, utilizing contention-based technologies, in the 3650 MHz band (i.e., 3650–3700 MHz). As of April 2010, more than 1270 licenses have been granted and more than 7433 sites have been registered. The Commission has not developed a definition of small entities applicable to 3650–3700 MHz band nationwide, non-exclusive licensees. However, the Commission estimated that the majority of these licensees are Internet Access Service Providers (ISPs) and that most of those licensees are small businesses.

170. Wireless Telephony. Wireless telephony includes cellular, personal communications services, and specialized mobile radio telephony carriers. As noted, the SBA has developed a small business size standard for Wireless Telecommunications Carriers (except Satellite). Under the SBA small business size standard, a business is small if it has 1,500 or fewer employees. Census data for 2007 shows that there were 1,383 firms in the Wireless Telecommunications Carriers (except Satellite) category that operated that year. Of those 1,383, 1,368 had fewer than 100 employees, and 15 firms had more than 100 employees. Thus under this category and the associated small business size standard, the majority of firms can be considered small. According to Trends in Telephone Service data, 434 carriers reported that they were engaged in wireless telephony. Of these, an estimated 222 have 1,500 or fewer employees and 212 have more than 1,500 employees. Therefore, approximately half of these entities can be considered small. Similarly, according to Commission data, 413 carriers reported that they were engaged in the provision of wireless telephony, including cellular service, Personal Communications Service (PCS), and Specialized Mobile Radio (SMR) Telephony services. Of these, an estimated 261 have 1,500 or fewer employees and 152 have more than 1,500 employees. Consequently, the Commission estimates that approximately half or more of these firms can be considered small. Thus, using available data, the Commission estimates that the majority of wireless firms can be considered small.

171. Broadband Personal Communications Service. The broadband PCS spectrum is divided into six frequency blocks designated A through F, and the Commission has held auctions for each block. The Commission initially defined a ''small business'' for C- and F-Block licenses as an entity that has average gross revenues of $40 million or less in the three previous years. For F-Block licenses, an additional small business size standard for ''very small business'' was added and is defined as an entity that, together with its affiliates, has average gross revenues of not more than $15 million for the preceding three years. These small business size standards, in the context of broadband PCS auctions, have been approved by the SBA. No small businesses within the SBA-approved small business size standards bid successfully for licenses in Blocks A and B. There were 90 winning bidders that claimed small business status in the first two C-Block auctions. A total of 93 bidders that claimed small and very small business status won approximately 40 percent of the 1,479 licenses in the first auction for the D, E,

and F Blocks. On April 15, 1999, the Commission completed the re-auction of 347 C-, D-, E-, and F-Block licenses in Auction No. 22. Of the 57 winning bidders in that auction, 48 claimed small business status and won 277 licenses.

172. On January 26, 2001, the Commission completed the auction of 422 C and F Block Broadband PCS licenses in Auction No. 35. Of the 35 winning bidders in that auction, 29 claimed small business status. Subsequent events concerning Auction 35, including judicial and agency determinations, resulted in a total of 163 C and F Block licenses being available for grant. On February 15, 2005, the Commission completed an auction of 242 C-, D-, E-, and F-Block licenses in Auction No. 58. Of the 24 winning bidders in that auction, 16 claimed small business status and won 156 licenses. On May 21, 2007, the Commission completed an auction of 33 licenses in the A, C, and F Blocks in Auction No. 71. Of the 14 winning bidders in that auction, six claimed small business status and won 18 licenses. On August 20, 2008, the Commission completed the auction of 20 C-, D-, E-, and F-Block Broadband PCS licenses in Auction No. 78. Of the eight winning bidders for Broadband PCS licenses in that auction, six claimed small business status and won 14 licenses.

173. AWS Services (1710–1755 MHz and 2110–2155 MHz bands (AWS–1); 1915–1920 MHz, 1995–2000 MHz, 2020–2025 MHz and 2175–2180 MHz bands (AWS–2); 2155–2175 MHz band (AWS–3)). For the AWS–1 bands, the Commission has defined a ''small business'' as an entity with average annual gross revenues for the preceding three years not exceeding $40 million, and a ''very small business'' as an entity with average annual gross revenues for the preceding three years not exceeding $15 million. In 2006, the Commission conducted its first auction of AWS–1 licenses. In that initial AWS–1 auction, 31 winning bidders identified themselves as very small businesses. Twenty-six of the winning bidders identified themselves as small businesses. In a subsequent 2008 auction, the Commission offered 35 AWS–1 licenses. Four winning bidders identified themselves as very small businesses, and three of the winning bidders identified themselves as a small business. For AWS–2 and AWS–3, although the Commission does not know for certain which entities are likely to apply for these frequencies, the Commission noted that the AWS–1 bands are comparable to those used for cellular service and personal communications service. The Commission has not yet adopted size standards for the AWS–2 bands but has proposed to treat both AWS–2 similarly to broadband PCS service and AWS–1 service due to the comparable capital requirements and other factors, such as issues involved in relocating incumbents and developing markets, technologies, and services.

174. On March 31, 2014, the Commission adopted rules for spectrum in the 1695–1710 MHz, 1755–1780 MHz, and 2155–2180 MHz bands (collectively, ''AWS–3'') that make available an additional sixty-five megahertz of commercial spectrum for the provision of mobile broadband services. The Commission indicated that the Commission will assign AWS–3 licenses by competitive bidding, offering five megahertz and ten megahertz blocks. The Spectrum Act states that the Commission shall grant new initial licenses for these bands by February 23, 2015.

175. In December 2012, the Commission adopted licensing, operating, and technical rules for stand-alone terrestrial mobile wireless operations in the AWS–4 spectrum. The Commission concluded that it would assign the AWS–4 spectrum to the incumbent Mobile Satellite Service (MSS) operators in order to make this spectrum available efficiently and quickly for flexible, terrestrial use, such as mobile broadband. The Commission also determined that it would assign AWS–4 licenses to DISH, as the incumbent MSS operator in that spectrum, and established a concrete, proven process for efficient relocation of incumbent operations from 2180–2200 MHz.

176. In June 2013, the Commission implemented the Spectrum Act provisions pertaining to the H Block by adopting service rules for the band, including pairing the two 5 megahertz blocks establishing EAs as the license area, and generally adopting Part 27 flexible use rules. On February 27, 2014 the Commission concluded its auction of H Block licenses, with DISH placing the winning bids on all 176 licenses across the nation.

177. Lower 700 MHz Band Licenses. The Commission previously adopted criteria for defining three groups of small businesses for purposes of determining their eligibility for special provisions such as bidding credits. The Commission defined a ''small business'' as an entity that, together with its affiliates and controlling principals, has average gross revenues not exceeding $40 million for the preceding three years. A ''very small business'' is defined as an entity that, together with its affiliates and controlling principals, has average gross revenues that are not more than $15 million for the preceding three years. Additionally, the Lower 700 MHz Service had a third category of small business status for Metropolitan/Rural Service Area (''MSA/RSA'') licenses —''entrepreneur''— which is defined as an entity that, together with its affiliates and controlling principals, has average gross revenues that are not more than $3 million for the preceding three years. The SBA approved these small size standards. An auction of 740 licenses was conducted in 2002 (one license in each of the 734 MSAs/RSAs and one license in each of the six Economic Area Groupings (EAGs)). Of the 740 licenses available for auction, 484 licenses were won by 102 winning bidders. Seventy-two of the winning bidders claimed small business, very small business, or entrepreneur status and won a total of 329 licenses. A second auction commenced on May 28, 2003, closed on June 13, 2003, and included 256 licenses. Seventeen winning bidders claimed small or very small business status and won 60 licenses, and nine winning bidders claimed entrepreneur status and won 154 licenses. In 2005, the Commission completed an auction of 5 licenses in the lower 700 MHz band (Auction 60). All three winning bidders claimed small business status.

178. In 2007, the Commission reexamined its rules governing the 700 MHz band in the *700 MHz Second Report and Order.* An auction of A, B and E block licenses in the Lower 700 MHz band was held in 2008. Twenty winning bidders claimed small business status (those with attributable average annual gross revenues that exceed $15 million and do not exceed $40 million for the preceding three years). Thirty three winning bidders claimed very small business status (those with attributable average annual gross revenues that do not exceed $15 million for the preceding three years). In 2011, the Commission conducted Auction 92, which offered 16 lower 700 MHz band licenses that had been made available in Auction 73 but either remained unsold or were licenses on which a winning bidder defaulted. Two of the seven winning bidders in Auction 92 claimed very small business status, winning a total of four licenses.

179. Upper 700 MHz Band Licenses. In the *700 MHz Second Report and Order,* the Commission revised its rules regarding Upper 700 MHz licenses. On January 24, 2008, the Commission commenced Auction 73 in which

several licenses in the Upper 700 MHz band were available for licensing: 12 Regional Economic Area Grouping licenses in the C Block, and one nationwide license in the D Block. The auction concluded on March 18, 2008, with three winning bidders claiming very small business status (those with attributable average annual gross revenues that do not exceed $15 million for the preceding three years) and winning five licenses.

180. Pursuant to the Spectrum Act, Congress provided for the deployment of a nationwide public safety broadband network in the 700 MHz band, including reallocating the Upper 700 MHz D Block from a commercial spectrum block to public safety use. On September 7, 2012, the Public Safety and Homeland Security Bureau adopted a *Report and Order* to reallocate the D Block for ''public safety services.'' Congress established FirstNet as an independent authority within the National Telecommunications and Information Administration (NTIA), and required the Commission to grant a license to FirstNet for the use of both the existing public safety broadband spectrum (763–768/793–798 MHz) and the Upper D Block. On November 15, 2012, the Public Safety and Homeland Security Bureau granted FirstNet the license prescribed by statute, under call sign WQQE234.

181. 700 MHz Guard Band Licenses. In 2000, the Commission adopted the *700 MHz Guard Band Report and Order,* in which it established rules for the A and B block licenses in the Upper 700 MHz band, including size standards for ''small businesses'' and ''very small businesses'' for purposes of determining their eligibility for special provisions such as bidding credits. A small business in this service is an entity that, together with its affiliates and controlling principals, has average gross revenues not exceeding $40 million for the preceding three years. Additionally, a very small business is an entity that, together with its affiliates and controlling principals, has average gross revenues that are not more than $15 million for the preceding three years. SBA approval of these definitions is not required. An auction of these licenses was conducted in 2000. Of the 104 licenses auctioned, 96 licenses were won by nine bidders. Five of these bidders were small businesses that won a total of 26 licenses. A second auction of 700 MHz Guard Band licenses was held in 2001. All eight of the licenses auctioned were sold to three bidders. One of these bidders was a small business that won a total of two licenses.

182. Specialized Mobile Radio. The Commission adopted small business size standards for the purpose of determining eligibility for bidding credits in auctions of SMR geographic area licenses in the 800 MHz and 900 MHz bands. The Commission defined a ''small business'' as an entity that, together with its affiliates and controlling principals, has average gross revenues not exceeding $15 million for the preceding three years. The Commission defined a ''very small business'' as an entity that, together with its affiliates and controlling principals, has average gross revenues not exceeding $3 million for the preceding three years. The SBA has approved these small business size standards for both the 800 MHz and 900 MHz SMR Service. The first 900 MHz SMR auction was completed in 1996. Sixty bidders claiming that they qualified as small businesses under the $15 million size standard won 263 licenses in the 900 MHz SMR band. In 2004, the Commission held a second auction of 900 MHz SMR licenses and three winning bidders identifying themselves as very small businesses won 7 licenses. The auction of 800 MHz SMR licenses for the upper 200 channels was conducted in 1997. Ten bidders claiming that they qualified as small or very small businesses under the $15 million size standard won 38 licenses for the upper 200 channels. A second auction of 800 MHz SMR licenses was conducted in 2002 and included 23 Basic Economic Area (''BEA'') licenses. One bidder claiming small business status won five licenses.

183. The auction of the 1,053 800 MHz SMR licenses for the General Category channels was conducted in 2000. Eleven bidders who won 108 licenses for the General Category channels in the 800 MHz SMR band qualified as small or very small businesses. In an auction completed in 2000, a total of 2,800 Economic Area licenses in the lower 80 channels of the 800 MHz SMR service were awarded. Of the 22 winning bidders, 19 claimed small or very small business status and won 129 licenses. Thus, combining all four auctions, 41 winning bidders for geographic licenses in the 800 MHz SMR band claimed to be small businesses.

184. In addition, there are numerous incumbent site-by-site SMR licensees and licensees with extended implementation authorizations in the 800 and 900 MHz bands. The Commission does not know how many firms provide 800 MHz or 900 MHz geographic area SMR pursuant to extended implementation authorizations, nor how many of these providers have annual revenues not exceeding $15 million. One firm has over $15 million in revenues. In addition, the Commission does not know how many of these firms have 1,500 or fewer employees. The Commission assumes, for purposes of this analysis, that all of the remaining existing extended implementation authorizations are held by small entities, as that small business size standard is approved by the SBA.

185. 1.4 GHz Band Licensees. The Commission conducted an auction of 64 1.4 GHz band licenses in the paired 1392–1395 MHz and 1432–1435 MHz bands, and in the unpaired 1390–1392 MHz band in 2007. For these licenses, the Commission defined ''small business'' as an entity that, together with its affiliates and controlling interests, had average gross revenues not exceeding $40 million for the preceding three years, and a ''very small business'' as an entity that, together with its affiliates and controlling interests, has had average annual gross revenues not exceeding $15 million for the preceding three years. Neither of the two winning bidders claimed small business status.

186. Broadband Radio Service and Educational Broadband Service. Broadband Radio Service systems, previously referred to as Multipoint Distribution Service (''MDS'') and Multichannel Multipoint Distribution Service (''MMDS'') systems, and ''wireless cable,'' transmit video programming to subscribers and provide two-way high speed data operations using the microwave frequencies of the Broadband Radio Service (''BRS'') and Educational Broadband Service (''EBS'') (previously referred to as the Instructional Television Fixed Service (''ITFS'')). In connection with the 1996 BRS auction, the Commission established a ''small business'' as an entity that had annual average gross revenues of no more than $40 million in the previous three years. The BRS auctions resulted in 67 successful bidders obtaining licensing opportunities for 493 Basic Trading Areas (''BTAs''). Of the 67 auction winners, 61 met the definition of a small business. BRS also includes licensees of stations authorized prior to the auction. At this time, the Commission estimated that of the 61 small business BRS auction winners, 48 remain small business licensees. In addition to the 48 small businesses that hold BTA authorizations, there are approximately 392 incumbent BRS licensees that are considered small entities. After adding the number of small business auction licensees to the number of incumbent

licensees not already counted, the Commission finds that there are currently approximately 440 BRS licensees that are defined as small businesses under either the SBA or the Commission's rules. In 2009, the Commission conducted Auction 86, which resulted in the licensing of 78 authorizations in the BRS areas. The Commission offered three levels of bidding credits: (i) A bidder with attributed average annual gross revenues that exceed $15 million and do not exceed $40 million for the preceding three years (small business) will receive a 15 percent discount on its winning bid; (ii) a bidder with attributed average annual gross revenues that exceed $3 million and do not exceed $15 million for the preceding three years (very small business) will receive a 25 percent discount on its winning bid; and (iii) a bidder with attributed average annual gross revenues that do not exceed $3 million for the preceding three years (entrepreneur) will receive a 35 percent discount on its winning bid. Auction 86 concluded in 2009 with the sale of 61 licenses. Of the ten winning bidders, two bidders that claimed small business status won four licenses; one bidder that claimed very small business status won three licenses; and two bidders that claimed entrepreneur status won six licenses.

187. In addition, the SBA's Cable Television Distribution Services small business size standard is applicable to EBS. There are presently 2,032 EBS licensees. All but 100 of these licenses are held by educational institutions. Educational institutions are included in this analysis as small entities. Thus, the Commission estimated that at least 1,932 licensees are small businesses. Since 2007, Cable Television Distribution Services have been defined within the broad economic census category of Wired Telecommunications Carriers; that category is defined as follows: ''This industry comprises establishments primarily engaged in operating and/or providing access to transmission facilities and infrastructure that they own and/or lease for the transmission of voice, data, text, sound, and video using wired telecommunications networks. Transmission facilities may be based on a single technology or a combination of technologies.'' For these services, the Commission uses the SBA small business size standard for the category ''Wireless Telecommunications Carriers (except satellite),'' which is 1,500 or fewer employees. To gauge small business prevalence for these cable services the Commission must, however, use the most current census data. According to Census Bureau data for 2007, there were a total of 955 firms in this previous category that operated for the entire year. Of this total, 939 firms employed 999 or fewer employees, and 16 firms employed 1,000 employees or more. Thus, the majority of these firms can be considered small.

D. Description of Projected Reporting, Recordkeeping, and Other Compliance Requirements for Small Entities

188. The *R&O* implements several rule and policy modifications: (1) Codifying the Commission's policies for attributing spectrum holdings for certain purposes; (2) including in the initial spectrum screen applied to the Commission's review of transactions the AWS–4 band, AWS H Block, additional BRS spectrum, most of the EBS spectrum and the AWS–3 band (on a market-by-market basis); (3) replacing the current application of the mobile spectrum screen in case-by-case analysis of post-auction applications with a determination for each auction of whether to apply mobile spectrum holding limits to that auction; and (4) reserving a certain amount of 600 MHz spectrum (to be determined by a market-based mechanism during the Incentive Auction) for qualified bidders. These modifications should have minimal, if any reporting, recordkeeping or compliance impact on small entities, which tend to have relatively small spectrum holdings and rarely engage in the sort of large mergers and spectrum acquisitions that would trigger the spectrum screen and competitive scrutiny. All four rule modifications are intended to provide a clear framework for the Commission's competitive review of spectrum acquisitions in auctions and secondary markets—a framework that focuses, among other things, on facilitating access by multiple providers, including small entities, to a mix of low-band and high-band spectrum. Rule modification 3 is intended to facilitate access to 600 MHz spectrum for the entry and expansion of multiple providers, including small entities.

E. Steps Taken To Minimize Significant Economic Impact on Small Entities and Significant Alternatives Considered

189. The rule modifications the Commission implements in the *R&O* are intended to promote competition in the provision of mobile services by, among other measures, facilitating access to spectrum by multiple providers, including small entities. The Commission has done so by imposing a minor new regulatory requirement on small firms, namely that such firms (and others) certify their qualification to bid on the reserved 600 MHz spectrum. After careful review, the Commission has determined that imposing this qualification to bid on reserved spectrum is necessary to help preserve spectrum for small entities. This certification process saves time and resources for small entities, making them better equipped to compete in spectrum auctions.

F. Report to Congress

190. The Commission will send a copy of the *R&O,* including this FRFA, in a report to be sent to Congress pursuant to the Congressional Review Act. In addition, the Commission will send a copy of the *R&O,* including this FRFA, to the Chief Counsel for Advocacy of the SBA. A copy of the *R&O* and FRFA (or summaries thereof) will also be published in the **Federal Register**.

G. Paperwork Reduction Act Analysis

191. The Report and Order contains new or modified information collection requirements subject to the Paperwork Reduction Act of 1995 (PRA), Public Law 104–13. It will be submitted to the Office of Management and Budget (OMB) for review under section 3507(d) of the PRA. OMB, the general public, and other Federal agencies will be invited to comment on the new or modified information collection requirements contained in this proceeding in a separate **Federal Register** notice. In addition, the Commission notes that pursuant to the Small Business Paperwork Relief Act of 2002, Public Law 107–198, *see* 44 U.S.C. 3506(c)(4), the Commission previously sought specific comment on how the Commission might further reduce the information collection burden for small business concerns with fewer than 25 employees.

192. In this present document, the Commission has assessed the effects of modifying reporting rules, and finds that doing so does not change the burden on small businesses with fewer than 25 employees.

VII. Ordering Clauses

193. *Accordingly, it is ordered,* pursuant to sections 1, 4(i), 201, 301, 303, 307, 308, 309, 310, 316, and 332 of the Communications Act of 1934, as amended, and sections 6003, 6401, 6402, 6403, and 6404 of the Middle Class Tax Relief Act of 2012, Public Law 112–96, 126 Stat. 156, 47 U.S.C. 151, 154(i), 201, 301, 303, 307, 308, 309, 310, 316, 332, 1403, 451, and 1452, that this Report and Order *is hereby adopted.*

194. *It is further ordered* that the rules adopted herein *will become effective* September 9, 2014.

195. *It is further ordered* that, pursuant to section 801(a)(1)(A) of the Congressional Review Act, 5 U.S.C. 801(a)(1)(A), the Commission *shall send* a copy of the *R&O* to Congress and to the Government Accountability Office.

196. *It is further ordered* that the Commission's Consumer and Governmental Affairs Bureau, Reference Information Center, *shall send* a copy of this *R&O,* including the Final Regulatory Flexibility Analysis, to the Chief Counsel for Advocacy of the Small Business Administration.

List of Subjects in Part 20

Communications common carriers, Communications equipment, Radio.

Federal Communications Commission.

Marlene H. Dortch,

Secretary.

For the reasons discussed in the preamble, the Federal Communications Commission amends 47 CFR part 20 as follows:

PART 20—COMMERCIAL MOBILE SERVICES

■ 1. The authority citation for part 20 continues to read as follows:

Authority: 47 U.S.C. 154, 160, 201, 251–254, 301, 303, 316, and 332 unless otherwise noted.

Section 20.12 is also issued under 47 U.S.C. 1302.

■ 2. Add § 20.22 to read as follows:

§ 20.22 Rules Governing Mobile Spectrum Holdings

(a) Applicants for mobile wireless licenses for commercial use, for assignment or transfer of control of such licenses, or for long-term *de facto* transfer leasing arrangements as defined in § 1.9003 of this chapter and long-term spectrum manager leasing arrangements as identified in § 1.9020(e)(1)(ii) must demonstrate that the public interest, convenience, and necessity will be served thereby. The Commission will evaluate any such license application consistent with the policies set forth in Policies Regarding Mobile Spectrum Holdings, *Report and Order,* FCC 14–63, WT Docket No. 12–269, adopted May 15, 2014.

(b) *Attribution of interests.* (1) The following criteria will apply to attribute partial ownership and other interests in spectrum holdings for purposes of:

(i) Applying a mobile spectrum holding limit to the licensing of spectrum through competitive bidding; and

(ii) Applying the initial spectrum screen to secondary market transactions.

(2) *Controlling interests shall be attributable.* Controlling interest means majority voting equity ownership, any general partnership interest, or any means of actual working control (including negative control) over the operation of the licensee, in whatever manner exercised.

(3) *Non-controlling interests of 10 percent or more in spectrum shall be attributable.* Interests of less than 10 percent in spectrum shall be attributable if such interest confers *de facto* control, including but not limited to partnership and other ownership interests and any stock interest in a licensee.

(4) The following interests in spectrum shall also be attributable to holders:

(i) Officers and directors of a licensee shall be considered to have an attributable interest in the entity with which they are so associated. The officers and directors of an entity that controls a licensee or applicant shall be considered to have an attributable interest in the licensee.

(ii) Ownership interests that are held indirectly by any party through one or more intervening corporations will be determined by successive multiplication of the ownership percentages for each link in the vertical ownership chain and application of the relevant attribution benchmark to the resulting product, except that if the ownership percentage for an interest in any link in the chain exceeds 50 percent or represents actual control, it shall be treated as if it were a 100 percent interest. (For example, if A owns 20% of B, and B owns 40% of licensee C, then A's interest in licensee C would be 8%. If A owns 20% of B, and B owns 51% of licensee C, then A's interest in licensee C would be 20% because B's ownership of C exceeds 50%).

(iii) Any person who manages the operations of a licensee pursuant to a management agreement shall be considered to have an attributable interest in such licensee if such person, or its affiliate, has authority to make decisions or otherwise engage in practices or activities that determine, or significantly influence, the nature or types of services offered by such licensee, the terms upon which such services are offered, or the prices charged for such services.

(iv) Any licensee or its affiliate who enters into a joint marketing arrangement with another licensee or its affiliate shall be considered to have an attributable interest in the other licensee's holdings if it has authority to make decisions or otherwise engage in practices or activities that determine or significantly influence the nature or types of services offered by the other licensee, the terms upon which such services are offered, or the prices charged for such services.

(v) Limited partnership interests shall be attributed to limited partners and shall be calculated according to both the percentage of equity paid in and the percentage of distribution of profits and losses.

(vi) Debt and instruments such as warrants, convertible debentures, options, or other interests (except non-voting stock) with rights of conversion to voting interests shall not be attributed unless and until converted or unless the Commission determines that these interests confer *de facto* control.

(vii) Long-term *de facto* transfer leasing arrangements as defined in § 1.9003 of this chapter and long-term spectrum manager leasing arrangements as identified in § 1.9020(e)(1)(ii) that enable commercial use shall be attributable to lessees, lessors, sublessees, and sublessors for purposes of this section.

(c) *600 MHz Band holdings.* (1) The Commission will reserve licenses for up to 30 megahertz of the 600 MHz Band, offered in the Incentive Auction authorized by Congress pursuant to 47 U.S.C. 309(j)(8)(G), for otherwise qualified bidders who do not hold an attributable interest in 45 megahertz or more of the total 134 megahertz of below-1-GHz spectrum which consists of the cellular (50 megahertz), the 700 MHz (70 megahertz), and the SMR (14 megahertz) spectrum in a Partial Economic Area (PEA), as calculated on a county by county population-weighted basis, utilizing 2010 U.S. Census data. The amount of reserved and unreserved 600 MHz Band licenses will be determined based on the market-based spectrum reserve set forth in Policies Regarding Mobile Spectrum Holdings, *Report and Order,* FCC 14–63, WT Docket No. 12–269, adopted May 15, 2014, as well as subsequent Public Notices. Nothing in this paragraph will limit, or may be construed to limit, an otherwise qualified bidder that is a non-nationwide provider of mobile wireless services from bidding on any reserved or unreserved license offered in the Incentive Auction.

(2) For a period of six years, after initial licensing, no 600 MHz Band license, regardless of whether it is reserved or unreserved, may be transferred, assigned, partitioned, disaggregated, or long term leased to any entity that, after consummation of the transfer, assignment, or leased on a long term basis, would hold an attributable

interest in one-third or more of the total suitable and available below-1-GHz spectrum as calculated on a county by county population-weighted basis in the relevant license area, utilizing 2010 U.S. Census data.

(3) For a period of six years, after initial licensing, no 600 MHz Band reserved license may be transferred, assigned, partitioned, disaggregated, or leased on a long term basis to an entity that was not qualified to bid on that reserved spectrum license under paragraph (c)(1) of this section at the time of the Incentive Auction short-form application deadline.

[FR Doc. 2014–15769 Filed 7–10–14; 8:45 am]

BILLING CODE 6712–01–P

FEDERAL COMMUNICATIONS COMMISSION

47 CFR Part 64

[CG Docket Nos. 13–24 and 03–123; FCC 13–118]

Misuse of Internet Protocol (IP) Captioned Telephone Service; Telecommunications Relay Services and Speech-to-Speech Services for Individuals With Hearing and Speech Disabilities

AGENCY: Federal Communications Commission.

ACTION: Final rule; announcement of effective date.

SUMMARY: In this document, the Commission announces that the Office of Management and Budget (OMB) has approved, for a period of three years, the information collection associated with the Commission's document Misuse of Internet Protocol (IP) Captioned Telephone Service; Telecommunications Relay Services and Speech-to-Speech Services for Individuals with Hearing and Speech Disabilities (*Report and Order*). This announcement is consistent with the *Report and Order,* which stated that the Commission would publish a document in the **Federal Register** announcing the effective date of those rules.

DATES: 47 CFR 64.604(c)(10)(iv), (c)(11)(iii) and (iv), and 64.606(a)(2)(ii)(F), published at 78 FR 53684, August 30, 2013, are effective July 11, 2014.

FOR FURTHER INFORMATION CONTACT: Eliot Greenwald, Disability Rights Office, Consumer and Governmental Affairs Bureau, at (202) 418–2235, or email *Eliot.Greenwald@fcc.gov.*

SUPPLEMENTARY INFORMATION: This document announces that, on June 18, 2014, OMB approved, for a period of three years, the information collection requirements contained in the Commission's *Report and Order,* FCC 13–118, published at 78 FR 53684, August 30, 2013. The OMB Control Number is 3060–1053. The Commission publishes this document as an announcement of the effective date of the rules. If you have any comments on the burden estimates listed below, or how the Commission can improve the collections and reduce any burdens caused thereby, please contact Cathy Williams, Federal Communications Commission, Room 1–C823, 445 12th Street SW., Washington, DC 20554. Please include the OMB Control Number, 3060–1053, in your correspondence. The Commission will also accept your comments via the Internet if you send them to *PRA@fcc.gov*.

To request materials in accessible formats for people with disabilities (Braille, large print, electronic files, audio format), send an email to *fcc504@fcc.gov* or call the Consumer and Governmental Affairs Bureau at (202) 418–0530 (voice), (202) 418–0432 (TTY).

Synopsis

As required by the Paperwork Reduction Act of 1995 (44 U.S.C. 3507), the FCC is notifying the public that it received OMB approval on June 18, 2014, for the information collection requirements contained in the Commission's rules at 47 CFR 64.604(c)(10)(iv), (c)(11)(iii) and (iv), and 64.606(a)(2)(F). Under 5 CFR 1320, an agency may not conduct or sponsor a collection of information unless it displays a current, valid OMB Control Number.

No person shall be subject to any penalty for failing to comply with a collection of information subject to the Paperwork Reduction Act that does not display a current, valid OMB Control Number. The OMB Control Number is 3060–1053.

The foregoing notice is required by the Paperwork Reduction Act of 1995, Public Law 104–13, October 1, 1995, and 44 U.S.C. 3507.

The total annual reporting burdens and costs for the respondents are as follows:

OMB Control Number: 3060–1053.

OMB Approval Date: June 18, 2014.

OMB Expiration Date: June 30, 2017.

Title: Two-Line Captioned Telephone Order and IP Captioned Telephone Service Declaratory Ruling; and Internet Protocol Captioned Telephone Service Reform Order, CG Docket Nos. 13–24 and 03–123.

Form Number: N/A.

Type of Review: Revision of a currently approved collection.

Respondents: Business or other for-profit entities.

Number of Respondents and Responses: 153,605 respondents; 373,280 responses.

Estimated Time per Response: .25 hours (15 minutes) to 20 hours.

Frequency of Response: Annual, every five years, on-going, and one-time reporting requirement; Recordkeeping requirement; Third party disclosure requirement.

Obligation to Respond: Required to obtain or retain benefits. The statutory authority for the information collection requirements is found at Sec. 225 [47 U.S.C. 225] Telecommunications Services for Hearing-Impaired Individuals; The Americans with Disabilities Act of 1990 (ADA), Public Law 101–336, 104 Stat. 327, 366–69, was enacted on July 26, 1990.

Total Annual Burden: 113,252 hours.

Total Annual Cost: $558,000.

Nature and Extent of Confidentiality: An assurance of confidentiality is not offered because this information collection does not require the collection of personally identifiable information by the Commission from individuals.

Privacy Impact Assessment: No impact(s).

Needs and Uses: On August 1, 2003, the Commission released the *Declaratory Ruling,* In the Matter of Telecommunication Relay Services and Speech-to-Speech Services for Individuals with Hearing and Speech Disabilities, CC Docket No. 98–67, published at 68 FR 55898, September 28, 2003. In the *Declaratory Ruling,* the Commission clarified that one-line captioned telephone voice carry over (VCO) service is a type of telecommunications relay service (TRS) and that eligible providers of such services are eligible to recover their costs in accordance with section 225 of the Communications Act. The Commission also clarified that certain TRS mandatory minimum standards do not apply to one-line captioned telephone VCO service and waived 47 CFR 64.604(a)(1) and (a)(3) for all current and future captioned telephone VCO service providers, for the same period of time beginning August 1, 2003. The waivers were contingent on the filing of annual reports, for a period of three years, with the Commission. Sections 64.604(a)(1) and (a)(3) of the Commission's rules, which contained information collection requirements under the PRA, became effective on March 26, 2004.

On July 19, 2005, the Commission released an *Order,* In the Matter of Telecommunication Relay Services and Speech-to-Speech Services for Individuals with Hearing and Speech Disabilities, CC Docket No. 98–67 and CG Docket No. 03–123, published at 70 FR 54294, September 14, 2005, clarifying that two-line captioned telephone VCO service, like one-line captioned telephone VCO service, is a type of TRS eligible for compensation from the Interstate TRS Fund. Also, the Commission clarified that certain TRS mandatory minimum standards do not apply to two-line captioned VCO service and waived 47 CFR 64.604(a)(1) and (a)(3) for providers who offer two-line captioned VCO service. This clarification increased the number of providers who will be providing one-line and two-line captioned telephone VCO services.

On January 11, 2007, the Commission released a *Declaratory Ruling,* In the Matter of Telecommunications Relay Services and Speech-to-Speech Services for Individuals with Hearing and Speech Disabilities, CG Docket No. 03–123, published at 72 FR 6960, February 14, 2007, granting a request for clarification that Internet Protocol (IP) captioned telephone relay service (IP CTS) is a type of TRS eligible for compensation from the Interstate TRS Fund (Fund) when offered in compliance with the applicable TRS mandatory minimum standards.

On August 26, 2013, the Commission issued a *Report and Order,* In the Matter of Misuse of Internet Protocol (IP) Captioned Telephone Service; Telecommunications Relay Services and Speech-to-Speech Services for Individuals with Hearing and Speech Disabilities, CG Docket Nos. 13–24 and 03–123, published at 78 FR 53684, August 30, 2013, to regulate practices relating to the marketing of IP CTS, impose certain requirements for the provision of this service, and mandate registration and certification of IP CTS users. The Commission published a notice in the **Federal Register** pursuant to 5 CFR 1320.8(d) on September 25, 2013 (78 FR 59025), seeking comments from the public on the information collection requirements contained in the initial supporting statement. Sorenson Communications, Inc., and its subsidiary CaptionCall, LLC (together, CaptionCall), filed comments on November 25, 2013, regarding the user registration and certification requirements adopted in the *Report and Order* as well as the certification, recordkeeping, and reporting requirements for hardship exemptions to the captions-off default setting requirement, also adopted in the *Report and Order.* CaptionCall did not comment on the other collections adopted in the *Report and Order.*

Subsequently, on December 6, 2013, the United States Court of Appeals for the District of Columbia Circuit stayed ''the rule adopted by the Commission [in the *Report and Order*] prohibiting compensation to providers for minutes of use generated by equipment consumers received from providers for free or for less than $75.'' *Sorenson Communications, Inc. and CaptionCall, LLC* v. *FCC,* Order, D.C. Cir., No. 13–1246, December 6, 2013, at 1–2. (For convenience, this notice refers to the requirement subject to the stay as ''the $75 equipment charge rule.'') In the revised supporting statement, the Commission sought OMB approval of the following requirements adopted in the Report and Order: (1) The requirements regarding the labeling of equipment, software and mobile applications; (2) the certification, recordkeeping, and reporting requirements for the hardship exemption to the captions default-off requirement; and (3) an additional information reporting requirement for IP CTS applicants that seek Commission certification to provide IP CTS and for IP CTS providers, requiring applicants to provide assurance that they will not request or collect payment from the TRS Fund for service to consumers who do not satisfy the Commission's IP CTS registration and certification requirements. Because the registration and certification requirements adopted in the *Report and Order* are related to the $75 equipment charge rule that was stayed by the court of appeals, the Commission did not seek OMB approval of those requirements at that time. *See* 79 FR 23354, April 28, 2014.

On June 18, 2014, OMB approved, for a period of three years, the information collection requirements specified above that are contained in the Commission's *Report and Order,* FCC 13–118, published at 78 FR 53684, August 30, 2013. The OMB Control Number is 3060–1053.

On June 20, 2014, the DC Circuit vacated the $75 equipment charge rule and the rule requiring providers to maintain captions–off as the default setting for IP CTS equipment. *Sorenson Communications, Inc. and CaptionCall, LLC* v. *FCC* (D.C. Cir., Nos. 13–1122 and 13–1246, June 20, 2014). Because the court has not yet issued its mandate, the captions-off default requirement, 47 CFR 64.604(c)(10)(i), (ii), (iii), and (v), remains in effect, and the certification, recordkeeping, and reporting requirements for the hardship exemption to the captions default-off requirement, 47 CFR 64.604(c)(10)(iv), will become effective at this time.

Federal Communications Commission.

Marlene H. Dortch,

Secretary.

[FR Doc. 2014–15878 Filed 7–10–14; 8:45 am]

BILLING CODE 6712–01–P

DEPARTMENT OF COMMERCE

National Oceanic and Atmospheric Administration

50 CFR Part 223

[Docket No. 130716626–4522–02]

RIN 0648–BD51

Endangered and Threatened Species: Designation of a Nonessential Experimental Population of Upper Columbia River Spring-run Chinook Salmon in the Okanogan River Subbasin, Washington, and Protective Regulations

AGENCY: National Marine Fisheries Service (NMFS), National Oceanic and Atmospheric Administration (NOAA), Commerce.

ACTION: Final rule and notice of availability of a final environmental assessment.

SUMMARY: We, the National Marine Fisheries Service (NMFS), designate and authorize the release of a nonessential experimental population of Upper Columbia River (UCR) spring-run Chinook salmon (*Oncorhynchus tshawytscha*) under section 10(j) of the Endangered Species Act (ESA) in the Okanogan River subbasin, and establish a limited set of take prohibitions for the nonessential experimental population under section 4(d) of the ESA. Successful reintroduction of a population within the species' historic range would contribute to its viability and further its conservation. The issuance of limited protective regulations will provide for the conservation of the species while providing assurances to people in the Okanogan River subbasin. The geographic boundary for the NEP is the main stem and all tributaries of the Okanogan River between the Canada-United States border and to the confluence of the Okanogan River with the Columbia River, Washington (hereafter ''Okanogan River NEP Area''). We have prepared a Final Environmental Assessment (EA) and Finding of No Significant Impact (FONSI) on the proposed action under

the National Environmental Policy Act (NEPA) (see **ADDRESSES:** section below).

DATES: The final rule is effective August 11, 2014.

ADDRESSES: The Final Environmental Assessment and other reference materials regarding this final rule can be obtained via the Internet at *http://www.westcoast.fisheries.noaa.gov* or by submitting a request to the Branch Chief, Protected Resources Division, West Coast Region, NMFS, 1201 NE Lloyd Blvd., Portland, OR 97232.

FOR FURTHER INFORMATION CONTACT: Scott Rumsey, NMFS, 1201 NE Lloyd Blvd., Portland, OR 97232 (503–872–2791) or Dwayne Meadows, NMFS, 1315 East-West Highway, Silver Spring, MD 20910 (301–427–8403).

SUPPLEMENTARY INFORMATION:

Background

The UCR spring-run Chinook Salmon evolutionarily significant unit (ESU) is listed as an endangered species under the ESA (16 USC 1531 *et seq.*). We first designated the UCR spring-run Chinook Salmon ESU as endangered on March 24, 1999 (64 FR 14308), reaffirmed this status on June 28, 2005 (70 FR 37160), and maintained its endangered status after the ESU's 5-year review (76 FR 50448, August 15, 2011). Section 9 of the ESA prohibits the ''take'' of UCR spring-run Chinook salmon unless otherwise authorized.

The listed ESU currently includes all naturally spawned populations of spring-run Chinook salmon in accessible reaches of Columbia River tributaries between Rock Island and Chief Joseph Dams, excluding the Okanogan River. The Okanogan River is a major tributary of the upper Columbia River, entering the Columbia River between Wells and Chief Joseph Dams. The majority of the Okanogan River subbasin is in Canada (74 percent) with the remainder in Washington State (26 percent). Listed UCR spring-run Chinook salmon from this ESU currently spawn in three river subbasins in eastern Washington: the Methow, Entiat, and Wenatchee. A fourth population historically inhabited the Okanogan River subbasin, but was extirpated in the 1930s because of overfishing, hydropower development, and habitat degradation (NMFS, 2007). The listed UCR Spring-run Chinook Salmon ESU also includes six artificial propagation programs: the Twisp River, Chewuch River, Methow Composite, Winthrop National Fish Hatchery, Chiwawa River, and White River spring Chinook salmon hatchery programs.

On November 22, 2010, we received a letter from the Confederated Tribes of the Colville Reservation (CTCR)), a federally recognized Native American tribe, requesting that we authorize the release of an experimental population of spring-run Chinook salmon in the Okanogan River subbasin under section 10(j) of the ESA. The CTCR also initiated discussions on this topic with the United States Fish and Wildlife Service (USFWS), the Bonneville Power Administration, the Army Corps of Engineers, the Bureau of Reclamation, the Washington Department of Fish and Wildlife, and the Okanagan Nations Alliance of Canada. The CTCR's request included a large amount of information on the biology of UCR spring-run Chinook salmon, the possible management implications of releasing an experimental population in the Okanogan River subbasin, and the expected benefits to the recovery of the listed UCR Spring-run Chinook Salmon ESU. On October 24, 2013 we published a proposed rule to designate a nonessential experimental population of spring-run Chinook salmon in the Okanogan River subbasin (78 FR 63439).

Under section 10(j) of the ESA, the Secretary of Commerce (Secretary) may authorize the release of an ''experimental'' population of a listed species outside its current range when the release of the experimental population will further the conservation of the listed species. The population is experimental under section 10(j) at times when it is wholly separate geographically from nonexperimental populations. In order to authorize the release of an experimental population, section 10(j) also requires that the Secretary determine, using the best available information, whether the experimental population is ''essential'' or ''nonessential'' to the continued existence of the listed species. Section 10(j) allows that an experimental population deemed ''nonessential'' is treated as a species proposed for listing during interagency consultations under section 7 of the Act, requiring federal agencies to confer (rather than consult) with NMFS on actions that are likely to adversely affect the experimental population (except when the population occurs in an area within the National Wildlife Refuge System or the National Park System, where the ESA requires the population be treated as a threatened species). With respect to the ESA's take prohibitions, section 10(j) treats experimental populations as threatened species, authorizing NMFS to issue regulations governing the application of the ESA's prohibition against take of listed species.

This action involves the designation of a NEP of UCR spring-run Chinook salmon in the Okanogan River subbasin. The release of this NEP of UCR spring-run Chinook salmon in the Okanogan River NEP Area would further the conservation of UCR spring-run Chinook salmon by potentially establishing a fourth population in the species' historic range, contributing to the viability of the ESU. Fish used for the reintroduction would come from the Methow Composite hatchery program located at Winthrop National Fish Hatchery. The Methow River population of these fish is included in the UCR Spring-run Chinook Salmon ESU and has the best chance to survive and adapt to conditions in the Okanogan River subbasin because they most closely resemble the genetic and life-history characteristics of the UCR spring-run Chinook salmon population that historically inhabited the Okanogan River subbasin (Jones *et al.,* 2011). Fish from the NEP are expected to remain geographically separate from the UCR Spring-run Chinook Salmon ESU during the life stages in which they remain in, or return to, the Okanogan River; the experimental designation will not apply at any time when members of the NEP are downstream of the confluence of the Okanogan River with the Columbia River. This experimental population release is being implemented as recommended in the Upper Columbia Spring Chinook Salmon and Steelhead Recovery Plan (NMFS, 2007), while at the same time ensuring that the reintroduction does not impose undue regulatory restrictions on landowners and third parties.

The geographic boundary defining the Okanogan River NEP Area for UCR spring-run Chinook salmon is the mainstem and all tributaries of the Okanogan River between the Canada-United States border to the confluence of the Okanogan River with the Columbia River. All UCR spring-run Chinook salmon in this defined Okanogan River NEP Area are considered part of the NEP, irrespective of their origin. Conversely, when UCR spring-run Chinook salmon are located outside this defined Okanogan River NEP Area, they are not considered part of the NEP.

In this action, we are designating an experimental population that is geographically separate from the nonexperimental ESA-listed UCR population, as spring-run Chinook salmon are currently extirpated in the Okanogan River subbasin. This designation is expected to reduce the species' overall extinction risk from natural and anthropogenic factors by increasing its abundance, productivity, spatial structure, and diversity within

the Upper Columbia River. These expected improvements in the overall viability of UCR spring-run Chinook salmon, in addition to other actions being implemented throughout the Columbia River migration corridor, will contribute to the species near-term viability and recovery, either minimally if an Okanogan population does not establish itself, or significantly if it does. The NEP will be geographically separated from the larger ESU of UCR spring-run Chinook salmon while in the Okanogan River subbasin, but will intermingle with other Chinook salmon populations as they travel downstream of the NEP area, while in the ocean, and on part of their upstream spawning migration. The ''experimental'' population designation is geographically based and does not travel with the fish outside the Okanogan River NEP Area.

This final rule establishes legal authority under section 10(j) of the ESA for an experimental population of UCR spring-run Chinook salmon in the Okanogan River basin. The rule also provides protective regulations under section 4(d) deemed necessary and advisable to conserve the experimental population. We, in close coordination with tribal, state and federal comanagers, are committed to completing review of the Hatchery Genetic Management Plans associated with the broodstock-collection, fish-transfer, and fish-release activities required to support this reintroduction effort.

To assist in the development of the Upper Columbia Spring Chinook Salmon and Steelhead Recovery Plan (hereinafter called the recovery plan), we assembled the Interior Columbia Technical Recovery Team (ICTRT) to identify population structure and recovery goals. The recovery plan subsequently adopted the ICTRT recovery goals as delisting criteria for the UCR spring-run Chinook Salmon ESU.

The ICTRT recommended specific abundance and productivity goals for each population in the UCR Spring-run Chinook Salmon ESU. The team also identified the current risk level of each population based on the gap between recent abundance and productivity and the desired recovery goals. The ICTRT (2008) considered all three extant natural populations (Methow, Entiat, and Wenatchee) to be at high risk of extinction based on their current abundance and productivity levels. The ICTRT also recommended spatial structure and diversity metrics for these populations (ICTRT, 2007). Spatial structure refers to the geographic distribution of a population and the processes that affect the distribution. Populations with restricted distribution and few spawning areas are at a higher risk of extinction from catastrophic environmental events (e.g., a single landslide) than are populations with more widespread and complex spatial structure. A population with complex spatial structure typically has multiple spawning areas containing the expression of diverse life-history characteristics. Diversity is the phenotypic (morphology, behavior, and life-history traits) and genotypic (DNA) characteristics within and between populations. Phenotypic diversity allows more diverse populations to use a wider array of environments and protects populations against short-term temporal and spatial environmental changes. Genotypic diversity, on the other hand, provides populations with the ability to survive long-term changes in the environment by providing genetic variations that may prove successful under different situations. It is the combination of phenotypic and genotypic diversity expressed in a natural setting that provides populations with the ability to utilize the full range of habitat and environmental conditions and to have the resiliency to survive and adapt to long-term changes in the environment. The mixing of hatchery fish (or excessive numbers of out-of-basin stocks) with naturally produced fish on spawning grounds can decrease genetic diversity within a population (NMFS, 2007). The ICTRT (2008) also determined that all three extant populations of this ESU are at high risk of extinction based on their current lack of spatial structure and diversity.

The recovery plan identifies re-establishment of a population in the Okanogan River subbasin as a recovery action (NMFS, 2007). More specifically, the recovery plan explains that re-establishment of a spring-run Chinook salmon population in the Okanogan River subbasin would aid recovery of this ESU by increasing abundance, productivity, spatial structure, and diversity, thereby reducing the risk of extinction to the ESU as a whole. The recovery plan establishes a framework for accomplishing restoration goals for the Okanogan River subbasin including restoring connectivity throughout their historic range where feasible and practical. Short- and long-term actions will protect riparian habitat along spawning and rearing streams and establish, restore, and protect stream flows suitable for spawning, rearing, and migration. In addition, water quality will be protected and restored where feasible and practical. In the mainstem Columbia River, implementation of the Federal Columbia River Power System (FCRPS) ESA section 7 Biological Opinion (NMFS, 2008a; NMFS, 2010) provides a number of new actions and continuation of existing programs that will likely continue to increase passage survival through the Columbia River mainstem passage corridor.

Statutory and Regulatory Framework

The ESA provides that species listed as endangered or threatened are afforded protection primarily through the prohibitions of section 9 (16 U.S.C. 1538) and the consultation requirements of section 7 (16 U.S.C. 1536). Section 9 of the ESA prohibits the take of an endangered species. The term ''take'' is defined by the ESA as ''to harass, harm, pursue, hunt, shoot, wound, trap, capture, or collect, or attempt to engage in any such conduct'' (16 U.S.C. 1532(19)). Section 7 of the ESA provides procedures for federal interagency cooperation and consultation to conserve federally listed species, ensure their survival, help in recovery of these species, and protect designated critical habitat necessary for the survival of the listed species. It also mandates that all federal agencies determine how to use their existing authorities to further the purposes of the ESA to aid in recovering listed species. In addition, ESA section 7 requires that federal agencies will, in consultation with NMFS, ensure that any action they authorize, fund, or carry out is not likely to jeopardize the continued existence of a listed species, or result in the destruction or adverse modification of designated critical habitat. Section 7 of the ESA does not apply to activities undertaken on private land unless they are authorized, funded, or carried out by a federal agency.

As noted above, for the purposes of section 7 of the ESA, section 10(j) requires that we treat NEPs as a species proposed to be listed, unless they are located within a National Wildlife Refuge or National Park, in which case they are treated as threatened, and section 7 consultation requirements apply. When NEPs are located outside a National Wildlife Refuge or National Park, only two provisions of section 7 apply—section 7(a)(1) and section 7(a)(4). In these instances, NEP designations provide additional flexibility in developing conservation and management measures by allowing us to work with the action agency early to develop conservation measures, instead of analyzing an already well-developed proposed action provided by

the agency under the framework of a section 7(a)(2) consultation. Additionally, for populations of listed species that are designated as nonessential, section 7(a)(4) of the ESA only requires that federal agencies confer (rather than consult) with us on actions that are likely to jeopardize the continued existence of a species proposed to be listed. These conferences are advisory in nature, and their findings do not restrict agencies from carrying out, funding, or authorizing activities.

For endangered species, section 9 of the ESA automatically prohibits take. For threatened species, the ESA does not automatically extend the Section 9 take prohibitions, but instead authorizes the agency to adopt regulations it deems necessary and advisable for species conservation, including prohibiting take under section 4(d). Where we designate an experimental population of an endangered species, the automatic take prohibition no longer applies; however, because the experimental population is treated as a separate threatened species, we can issue protective 4(d) regulations for that population as we deem necessary and advisable for the conservation of the population. Such regulations may include take prohibitions.

The USFWS has regulations for experimental population designation, 50 CFR 17.80 through 17.84, that provide definitions, considerations in finding that the designation would further the conservation of the species and information to be included in the designation. These regulations state that, in making the determination that the designation would further the conservation of the species, the Secretary must consider the effect of taking the eggs or young from another population, the likelihood that the experimental population will become established, the effect the designation would have on the species' overall recovery, and the extent to which the experimental population would be affected by activities in the area. Under the USFWS regulations, a regulation designating the experimental population must include: A clear means to identify the experimental population; a finding based on the best available science indicating whether the population is essential to the continued existence of the species; management restrictions, protective measures, or other management concerns; and a periodic review of the success of the release and its effect on the conservation and recovery of the species. The USFWS regulations also state that any experimental population shall be treated as threatened for purposes of establishing protective regulations under ESA section 4(d), and the protective regulations for the experimental population will contain applicable prohibitions and exceptions for that population.

The USFWS implementing regulations contain the following specific provisions:

The USFWS regulations define an essential experimental population as one ''whose loss would be likely to appreciably reduce the likelihood of the survival of the species in the wild'' (50 CFR 17.80(b)). All other experimental populations are classified as nonessential (50 CFR 17.81(f)). This definition was directly derived from the legislative history to the ESA amendments that created section 10(j).

In determining whether the experimental population will further the conservation of the species, the USFWS regulations require the agency to consider: (1) Any possible adverse effects on extant populations of a species as a result of removal of individuals, eggs, or propagules for introduction elsewhere, (2) the likelihood that any such experimental population will become established and survive in the foreseeable future, (3) the relative effects that establishment of an experimental population will have on the recovery of the species, and (4) the extent to which the introduced population may be affected by existing or anticipated federal or state actions or private activities within or adjacent to the experimental population area (50 CFR 17.81(b)).

USFWS regulations at 50 CFR 17.81(c) also describe four components that will be provided in any regulations promulgated with regard to an experimental population under section 10(j). The components are: (1) Appropriate means to identify the experimental population, including, but not limited to, its actual or proposed location, actual or anticipated migration, number of specimens released or to be released, and other criteria appropriate to identify the experimental population(s), (2) a finding of whether the experimental population is, or is not, essential to the continued existence of the species in the wild, (3) management restrictions, protective measures, or other special management concerns of that population, which may include but are not limited to, measures to isolate and/or contain the experimental population designated in the regulation from natural populations, and (4) a process for periodic review and evaluation of the success or failure of the release and the effect of the release on the conservation and recovery of the species.

We have not promulgated regulations implementing section 10(j) of the ESA, and have authorized only two experimental populations to date (78 FR 2893, January 15, 2013; 78 FR 79622, December 31, 2013). The USFWS has authorized many experimental populations. While USFWS' regulations do not apply to NMFS' 10(j) authorizations, they can help inform our authorization process and we use them to do so. We considered the factors identified in the USFWS regulations in the course of making the statutorily mandated determinations found in ESA section 10(j). To summarize, the statute requires that we determine: (1) Whether the release will further the conservation of the species, and (2) whether the population is essential or nonessential. In addition, because section 10(j) provides that the population will only be experimental when and at such times as it is wholly separate geographically from nonexperimental populations of the same species, we must establish that there are such times and places when the experimental population is wholly geographically separate. Similarly, the regulations require that we identify the experimental population; the legislative history indicates that the purpose of this requirement is to provide notice as to which populations of listed species are experimental (See, Joint Explanatory Statement of the Committee of Conference, H.R. Conf. Rep No. 97–835, at 15 (1982)).

Biological Information and Current Status

UCR spring-run Chinook salmon are anadromous fish that migrate as adults from the ocean in the spring to spawn in freshwater streams where their offspring hatch and rear prior to migrating back to the ocean to forage until maturity. At spawning, adults pair to lay and fertilize thousands of eggs in freshwater gravel nests or ''redds'' excavated by females. Depending on temperatures, eggs incubate for several weeks to months before hatching as ''alevins'' (a larval life stage dependent on food stored in a yolk sac). Following yolk sac absorption, alevins emerge from the gravel as young juveniles called ''fry'' and begin actively feeding. UCR spring-run Chinook salmon juveniles spend a year in freshwater areas before migrating to the ocean. The physiological and behavioral changes required for the transition to salt water result in a distinct ''smolt'' stage. On their journey juveniles migrate downstream through a riverine and

estuarine corridor between their natal lake or stream and the ocean.

After two to three years in the ocean, adult UCR spring-run Chinook salmon begin returning from the ocean in the early spring, with the run into the Columbia River peaking in mid-May (NMFS, 2007). Spring-run Chinook salmon enter the upper Columbia River tributaries from April through July. After migration, they hold in these tributaries until spawning occurs in the late summer, peaking in mid-to-late August.

On March 18, 2010, we announced the initiation of 5-year status reviews for 16 ESUs of Pacific salmon including the UCR Spring-run Chinook Salmon ESU (75 FR 13082). As part of this review, our Northwest Fisheries Science Center compiled and issued a report on the newest scientific information on the viability of this ESU. The report states,

> ''The Upper Columbia Spring-run Chinook salmon ESU is not currently meeting the viability criteria (adapted from the ICTRT) in the Upper Columbia Recovery Plan. Increases in natural origin abundance relative to the extremely low spawning levels observed in the mid-1990s are encouraging; however, average productivity levels remain extremely low. Large-scale directed supplementation programs are underway in two of the three extant populations in the ESU. These programs are intended to mitigate short-term demographic risks while actions to improve natural productivity and capacity are implemented. While these programs may provide short-term demographic benefits, there are significant uncertainties regarding the long-term risks of relying on high levels of hatchery influence to maintain natural populations (Ford *et al.* 2011).''

All extant populations are still considered to be at high risk of extinction based on the abundance/productivity and spatial structure/diversity metrics. When the risk levels for these attributes are integrated, the overall risk of extinction for this ESU is high (Ford *et al.,* 2011).

Analysis of the Statutory Requirements

1. Will authorizing release of a UCR spring-run Chinook salmon experimental population in the Okanogan River subbasin further the conservation of the species?

The ESA defines ''conservation'' as ''the use of all methods and procedures which are necessary to bring any endangered species or threatened species to the point at which the measures provide pursuant to this [Act] are no longer necessary.'' The factors we considered in determining if release of an experimental population in the Okanogan River NEP Area would ''further the conservation'' of UCR spring-run Chinook salmon included the potential impacts to the ESU posed by the release, the likelihood that the experimental population would become established and self-sustaining, and the extent to which a self-sustaining experimental population would reduce the threats to the ESU's viability. The USFWS regulations suggest considering whether the experimental population would be affected by other state- or federally-approved actions in the area. This last factor may not be subject to precise evaluation, but, where possible, we took into account all factors such as other approved actions that affect whether a population could become established and self-sustaining.

The Upper Columbia Spring Chinook Salmon and Steelhead Recovery Plan contains specific management strategies for recovering UCR spring-run Chinook salmon that include securing existing populations and reintroducing spring-run Chinook salmon into historically occupied habitats in the Okanogan River subbasin. The plan concludes, and we continue to agree, that establishing an experimental population of UCR spring-run Chinook salmon in the Okanogan River subbasin is expected to reduce the species' overall extinction risk from natural and anthropogenic factors by increasing its abundance, productivity, spatial structure, and diversity within the Upper Columbia River. These expected improvements in the overall viability of UCR spring-run Chinook salmon, in addition to other actions being implemented throughout the Columbia River migration corridor, will contribute to the species near-term viability and recovery.

To ensure the best chance for a successful reintroduction, we first determined the most appropriate source of broodstock within the UCR Spring-run Chinook Salmon ESU and the availability of that source. Reintroduction efforts have the best chance for success when the donor population has life history characteristics and genetic diversity compatible with the anticipated environmental conditions of the habitat into which fish will be reintroduced (Araki *et al.,* 2008). Populations found in watersheds closest to the reintroduction area are most likely to have adaptive traits that will lead to a successful reintroduction, and therefore only spring-run Chinook salmon populations found in the Upper Columbia River subbasin were considered for establishing the experimental population in the Okanogan River NEP Area.

The listed UCR Spring-run Chinook Salmon ESU includes six artificial propagation programs: The Twisp River, Chewuch River, Methow Composite, Winthrop National Fish Hatchery, Chiwawa River, and White River. We evaluated the fish propagated by each of these programs for their potential to support a re-introduced population in the Okanogan River subbasin. We concluded that fish produced from the Methow Composite stock of UCR spring-run Chinook salmon at Winthrop National Fish Hatchery are likely the most similar to the extirpated Okanogan spring-run Chinook salmon and represent the best initial source of individuals to establish an experimental population of UCR spring-run Chinook salmon in the Okanogan River. Because the Methow Composite stock of UCR spring-run Chinook salmon are from the neighboring Methow River subbasin and have evolved in an environment similar to that of the Okanogan River subbasin, they are likely to be more genetically similar to the extirpated Okanogan spring-run Chinook salmon population than spring-run Chinook salmon populations from the more distant Entiat and Wenatchee River subbasins. For the past several years, enough adult salmon from the Methow Composite hatchery program have returned to the Methow subbasin to provide enough excess eggs and sperm to begin raising fish for reintroduction into the Okanogan River NEP Area.

We also considered the suitability of available habitat in the Okanogan River subbasin to support the experimental population in the foreseeable future. The Columbia basin as a whole is estimated to have supported pre-development spring-run Chinook salmon returns as large as 588,000 fish (Chapman, 1986). Historically, the UCR Spring-run Chinook Salmon ESU component of the Columbia basin is estimated to have comprised up to 68,900 fish (Mullan, 1987; UCSRB, 2007). It is estimated that before the 1930s, the Okanogan population of the UCR Spring-run Chinook Salmon ESU contained at least 500 spring-run Chinook salmon (NMFS, 2007).

While the historical population of spring-run Chinook salmon in the Okanogan River subbasin has been extirpated, the potential remains to reestablish a population in this area. Over the past century, overfishing, hydropower development, and local habitat degradation have severely impacted ecosystem features and processes in the Okanogan and other subbasins, creating a fragmented mixture of altered or barren fish and wildlife habitats and eradicating UCR spring-run Chinook salmon from the Okanogan River subbasin. Disruptions

in the hydrologic system have resulted in widespread loss of migratory corridors and access to productive habitat (CTCR, 2007). Low base stream flow and warm summer water temperatures have limited salmonid production both currently and historically. Stream flow and fish passage within the Okanogan River subbasin are affected by a series of dams and water diversions. However, the Upper Columbia Spring Chinook Salmon and Steelhead Recovery Plan estimates that the Okanogan River subbasin continues to have the capacity for at least 500 spring-run Chinook salmon (NMFS, 2007).

The recovery plan establishes a framework for accomplishing restoration goals for the Okanogan River subbasin including restoring connectivity throughout their historic range where feasible and practical. Short- and long-term actions will protect riparian habitat along spawning and rearing streams and establish, restore, and protect stream flows suitable for spawning, rearing, and migration. In addition, water quality will be protected and restored where feasible and practical. In the mainstem Columbia River, implementation of the FCRPS ESA section 7 Biological Opinion (NMFS, 2008a; NMFS, 2010) provides a number of new actions and continuation of existing programs that will likely continue to increase passage survival through the Columbia River mainstem passage corridor. The implementation of these actions continues to improve habitat conditions in the Okanogan River NEP Area to support reestablishing a potential fourth independent population of UCR spring-run Chinook salmon. Salmon Creek and Omak Creek offer the best habitat conditions for spawning and rearing in the subbasin, and major efforts by the CTCR are underway to restore tributary habitat for spring-run Chinook salmon in both the United States and Canadian portions of the Okanogan River subbasin.

In addition to actions taken under the recovery plan, there are many federal and state laws and regulations that will also help ensure the establishment and survival of the experimental population by protecting aquatic and riparian habitat. Section 404 of the Clean Water Act (CWA) (33 U.S.C. 1344) requires permits from the United States Army Corps of Engineers (Corps) before dredge or fill material can be discharged into waters of the United States. The dredge and fill permit program provides avoidance, minimization, and mitigation for the potential adverse effects of dredge and fill activities within the nation's waterways (40 CFR 100–149). Section 404(b) of the CWA requires that section 404 permits be granted only in the absence of practicable alternatives to the proposed project, which would have a less adverse impact on the aquatic ecosystem. CWA section 401 provides protection of water quality by requiring dischargers to navigable waters to comply with applicable water quality standards. In addition, construction and operational storm water runoff is subject to restrictions under CWA section 402 and state water quality laws. Also the Magnuson-Stevens Fishery Conservation and Management Act, as amended (16 U.S.C. 1801 *et seq.*), requires that Essential Fish Habitat (EFH) be identified and federal action agencies consult with NMFS on any activity which they fund, permit, or carry out that may adversely affect EFH. Freshwater EFH for spring-run Chinook salmon in the Upper Columbia River subbasin includes the Okanogan River NEP Area. For each of these authorities, we do not assume complete implementation and compliance for all actions potentially affecting the experimental population or the listed ESU. However, we expect compliance and assume, at a minimum, that these authorities provide a regulatory regime that tends to encourage actions consistent with that regime.

The habitat improvement actions called for in the recovery plan, the protective measures in this final rule, and compliance with existing federal, state and local laws, statutes, and regulations, are expected to contribute to the survival of the experimental population in the Okanogan River subbasin into the foreseeable future. Although any reintroduction effort is likely to require supplementation with hatchery-origin fish for several years, we conclude there is the potential for a population of spring-run Chinook salmon to become established. Furthermore, we conclude that such a self-sustaining population of genetically compatible individuals is likely to further the conservation of the species as discussed above.

2. Is the experimental population separate geographically from the nonexperimental populations of the same species?

Section 10(j) of the ESA requires that we identify the population by regulation to provide notice of which populations are experimental. The statute also provides that the population is only considered experimental ''when, and at such times as, [it] is wholly separate geographically from the nonexperimental populations of the same species.'' In this case, the analysis and information that identifies the population also demonstrates when and where it will be wholly geographically separate from other UCR spring-run Chinook salmon. Under this rule, the experimental population is defined as the UCR spring-run Chinook salmon population released in the Okanogan River subbasin, and their subsequent progeny, when geographically located within the Okanogan River NEP Area. When the juvenile experimental UCR spring-run Chinook salmon leave the mouth of the Okanogan River and pass into the Columbia River mainstem and proceed to the Pacific Ocean, they are no longer geographically separated from the other extant, listed UCR spring-run Chinook salmon populations, and the ''experimental'' designation does not apply, unless and until they return as adults to spawn in the Okanogan River NEP Area.

The Okanogan River NEP Area provides the requisite level of geographic separation because UCR spring-run Chinook salmon are currently extirpated from this area, and straying of other UCR spring-run Chinook populations into this area is extremely low (Colville Business Council, 2010). The UCR Spring-run Chinook Salmon ESU does not include the Okanogan River, and the status of the ESU does not rely on the Okanogan River subbasin for recovery. If any extant UCR spring-run Chinook salmon stray into the Okanogan River subbasin, they would acquire experimental status while within that area, and therefore no longer be covered by the ''endangered'' listing, nor by the full range of section 9 prohibitions. The ''experimental'' designation is geographically based and does not travel with the fish outside the Okanogan River subbasin.

Hatchery-origin fish used for the reintroduction will be marked, for example, with specific fin clips and/or coded-wire tags to evaluate the stray rate and allow for broodstock collection of returning NEP adults. It may be possible to mark NEP juvenile fish released into the Okanogan River NEP Area in an alternative manner (other than coded-wire tags) that would distinguish them from other Chief Joseph Hatchery-raised Chinook salmon, and we will consider this during the Chief Joseph Hatchery annual review. During the Chief Joseph Hatchery annual review process, information on fish interactions and stray rates, productivity rates of hatchery-origin and natural-origin populations, and harvest effects are analyzed and evaluated for consistency with best management

practices for artificial production as developed by the Hatchery Scientific Review Group (HSRG) and other science groups in the Pacific Northwest. Any such clips or tags would not, however, be for the purpose of identifying the NEP since, as discussed above, the experimental population is identified based on the geographic location of the fish. Indeed, if the reintroduction is successful, and fish begin reproducing naturally, their offspring would not be distinguishable from fish from other natural-origin UCR spring-run Chinook salmon populations. Outside of the experimental population area, e.g., in the Columbia River below the mouth of the Okanogan River or in the ocean, any such unmarked fish (juveniles and adults alike) will not be considered members of experimental population. They will be considered part of the ESU currently listed as endangered. Likewise, any fish that were marked before release in the NEP Okanogan River Area will not be considered part of the experimental population once they leave the Okanogan River NEP Area; rather, they will be considered part of the ESU currently listed as endangered.

3. Is the experimental population essential to the continued existence of the species?

The ESA requires the Secretary, in authorizing the release of an experimental population, to determine whether the population would be ''essential to the continued existence'' of the ESU. The statute does not elaborate on how this determination is to be made. However, as noted above, Congress gave some further definition to the term when it described an essential experimental population as one whose loss ''would be likely to appreciably reduce the likelihood of the survival of the species in the wild'' (see, Joint Explanatory Statement of the Committee of Conference, H.R. Conf. Rep. No. 97–835, at 15 (1982)). The USFWS incorporated this concept into its regulatory definition of an essential population.

Based on the best available information as required by ESA section 10(j)(2)(B), we conclude that the proposed experimental population will not be one ''whose loss would be likely to appreciably reduce the likelihood of survival'' of the UCR Chinook Spring-run Salmon ESU for the reasons described below.

The recovery plan states that recovery of spring-run Chinook salmon in the Okanogan subbasin is not a requirement for delisting. Based on the recovery plan's recovery criteria and proposed management strategies, the UCR Spring-run Chinook Salmon ESU could recover to the point where listing under the ESA is no longer necessary solely with contributions from the three extant populations. Specifically, if the Wenatchee and Methow populations could achieve a 12-year geometric mean abundance of 2,000 natural-origin fish, and if the Entiat population reaches a 12-year geometric mean abundance of 500 natural-origin fish, the UCR Spring-run Chinook Salmon ESU would meet the recovery criteria for abundance. This would require a minimum productivity of between 1.2 and 1.4 recruits per spawner for the 12-year time period (NMFS, 2007). The extant populations would also need to meet specific criteria, identified in the recovery plan, which would result in a moderate or lower risk for spatial structure and diversity. The Upper Columbia Salmon and Steelhead Recovery Plan identifies several harvest, hatchery management, hydropower and habitat related actions that could be taken to improve viability of the three extant UCR spring-run Chinook salmon populations.

The recovery plan estimates recovery of the UCR Spring-run Chinook Salmon ESU would take 10 to 30 years without the addition of the Okanogan population. Based on the best available current evidence and information, we conclude that recovery of the UCR Spring-run Chinook Salmon ESU would still be likely under the above-discussed conditions.

NOAA's 2011 5-year status review concluded that, despite an increase in abundance and a decrease in productivity of the UCR Spring-run Chinook Salmon ESU, information considered in the review did not change the biological extinction risk category since the previous 2005 status review. Neither status review considered the potential for UCR spring-run Chinook salmon in the Okanogan River subbasin to alter this risk, because UCR spring-run Chinook salmon were extirpated from the Okanogan River subbasin in the 1930s and no UCR spring-run Chinook salmon currently exist in the Okanogan River subbasin.

In summary, even without the establishment of a fourth (Okanogan) population, the UCR Spring-run Chinook Salmon ESU could possibly be delisted if all threats were addressed and all three populations recovered. Because we conclude that a population of UCR spring-run Chinook salmon in the Okanogan River NEP Area is not essential for conservation of the ESU, we conclude that the proper designation is as an NEP. Under Section 10(j)(2)(C)(ii) of the ESA we cannot designate critical habitat for a NEP.

Location of the NEP

ESA section 10(j) requires that the experimental population be designated ''only when, and at such times, as it is geographically separate from nonexperimental populations of the same species.'' The geographic boundary defining the Okanogan River NEP Area for UCR spring-run Chinook salmon is the mainstem and all tributaries of the Okanogan River between the Canada-United States border to the confluence of the Okanogan River with the Columbia River. All UCR spring-run Chinook salmon in this defined Okanogan River NEP Area are considered part of the NEP, irrespective of their origin. Conversely, when UCR spring-run Chinook salmon are located outside this defined Okanogan River NEP Area, they are not considered part of the NEP.

Additional Management Restrictions, Protective Measures, and Other Special Management Considerations

As indicated above, section 10(j) requires that experimental populations are treated as threatened species, except for certain portions of section 7. Congress intended that this provision would authorize us to issue regulations we deemed necessary and advisable to provide for the conservation of the experimental population, just as it does, under section 4(d), for any threatened species (Joint Explanatory Statement, *supra,* at 15). In addition, when amending the ESA to add section 10(j), Congress specifically intended to provide broad discretion and flexibility to the Secretary in managing experimental populations so as to reduce opposition to release of listed species outside their current range (H.R. Rep. No. 567, 97th Cong. 2d Sess. 34 (1982)). Therefore, we are exercising the authority to issue protective regulations under section 4(d) for the proposed NEP to identify take prohibitions necessary to provide for the conservation of the species and otherwise provide assurances to people in the Okanogan River NEP Area.

The ESA defines ''take'' to mean: Harass, harm, pursue, hunt, shoot, wound, kill, trap, capture, or collect, or attempt to engage in any such conduct. Concurrent with the ESA section 10(j) authorization, we adopt protective regulations under ESA section 4(d) for the experimental population that prohibit take of UCR spring-run Chinook salmon that are part of the experimental population except in the

following circumstances in the Okanogan River NEP Area:

1. Any activity taken pursuant to a valid permit issued by us under § 223.203(b)(1) and § 223.203(b)(7) for scientific research activities.

2. Aid, disposal, or salvage of fish by authorized agency personnel acting in compliance with 50 CFR 223.203(b)(3).

3. Activities associated with artificial propagation of the experimental population under an approved Hatchery Genetic Management Plan that complies with the requirements of-§ 223.203(b)(5).

4. Any harvest-related activity undertaken by a tribe, tribal member, tribal permittee, tribal employee, or tribal agent consistent with tribal harvest regulations and an approved Tribal Resource Management Plan that complies with the requirements of § 223.204.

5. Any harvest-related activity consistent with state harvest regulations and an approved Fishery Management Evaluation Plan that complies with the requirements of § 223.203(b)(4).

6. Any take that is incidental [1] to an otherwise lawful activity. Otherwise lawful activities include, but are not limited to, agricultural, water management, construction, recreation, navigation, or forestry practices, when such activities are in full compliance with all applicable laws and regulations.

Outside the Okanogan River NEP Area, UCR spring-run Chinook salmon are not considered to be part of the NEP (even if they originated there), and the take prohibitions applicable for endangered UCR spring-run Chinook salmon will apply.

Summary of Comments and Responses

The proposed rule and draft EA established a public comment period from October 24 until December 9, 2013 (78 FR 63439, October 24, 2013). In addition to welcoming comments in general, we also requested comments on seven specific questions regarding: (1) Whether the Methow Composite stock of UCR spring-run Chinook salmon is the best fish to use in establishing an experimental population and the scientific basis for the comment; (2) the proposed geographical boundary of the experimental population; (3) the extent to which the experimental population would be affected by current or future federal, state, tribal, or private actions within or adjacent to the experimental population area; (4) any necessary management restrictions, protective measures, or other management measures that we may not have considered; (5) the likelihood that the experimental population would become established in the Okanogan River NEP Area; (6) whether the proposed experimental population is essential or nonessential; and (7) whether the proposed designation furthers the conservation of the species and whether we have used the best available science in making this determination. We also contacted other Federal agencies and tribes and invited them to comment on the proposed rule. On November 5, 2013, we also held a public meeting within the geographic area affected by the proposed rule.

We received comments from a total of 8 individuals or organizations on the proposed rule and draft EA representing the opinions of various natural resource agencies, county officials, non-governmental organizations, and private entities. Six of the commenters expressed support for the proposal. One of the commenters in support of the proposal also suggested a few specific technical edits and clarifications be made to the draft EA, which we incorporated. The remaining two commenters provided comments expressing concerns about the proposal. Below we summarize our responses to all of the substantive issues raised regarding the proposed rule and draft EA.

Comments and Responses

Comment 1: One commenter noted disappointment in the short comment period, and felt that there was inadequate coordination with elected officials in developing the proposed introduction of endangered UCR spring-run Chinook salmon into the Okanogan River and tributaries.

Response: We provided a 45-day comment period starting on October 24, 2013, and ending on December 9, 2013. We did not receive requests from commenters for a review period extension.

We believe that there was adequate coordination with elected officials and the public in the development of the proposed NEP. The reintroduction of spring-run Chinook salmon into the Okanogan River subbasin was included as a recommended action in the 2007 Upper Columbia Spring Chinook Salmon and Steelhead Recovery Plan. The Recovery Plan was developed in close collaboration with the Upper Columbia Salmon Recovery Board with extensive involvement of elected officials, state and tribal co-managers, and other stakeholders throughout the region. In 2011, we published an Advance Notice of Proposed Rulemaking in the **Federal Register** (76 FR 42658; July 16, 2011) notifying the public of our intention to develop a proposal for reintroduction, and describing opportunities for public engagement. Additional opportunities for input and engagement were highlighted in the proposed rule (78 FR 63439; October 24, 2013). We met with the Okanogan County Commissioners on December 5, 2011, and on November 5, 2013. On those same dates we also convened public meetings in Omak, Washington on the proposed reintroduction. These meetings were noticed in advance in local newspapers.

Comment 2: One commenter contended that there is a lack of credible historical evidence that the Okanogan Basin ever supported a viable population of spring-run Chinook salmon.

Response: We believe there is credible evidence that the Okanogan River subbasin historically supported a viable population of spring-run Chinook salmon (see section 3.2.1.1 of the EA for more detailed discussion). UCR spring-run Chinook salmon historically occurred in at least four systems in the Okanogan River subbasin: (1) Salmon Creek (Craig and Suomela, 1941), (2) tributaries upstream of Lake Osoyoos (Gartrell, 1936; Chapman *et al.,* 1995; NPCC, 2004a), (3) Omak Creek (Fulton, 1968), and (4) the Similkameen River (Fulton, 1968).

Comment 3: One commenter expressed concern that there is inadequate habitat to support the reintroduction of UCR spring-run Chinook salmon.

Response: In the EA we evaluated whether the current water conditions would allow for a reintroduction program to succeed, and which areas of the Okanogan River subbasin currently have potential for year round rearing of UCR spring-run Chinook salmon (Section 3.5.4). We concluded that there is adequate tributary habitat to support UCR spring-run Chinook salmon in the United States portion of the Okanogan River subbasin.

Comment 4: One commenter expressed concern that the reintroduction of spring-run Chinook salmon will negatively impact other ESA listed and non-listed species.

Response: The reintroduction will not negatively impact other populations of UCR spring run Chinook salmon. The reintroduction effort will effectively reduce releases of Methow Composite hatchery smolts in the Methow subbasin by 200,000 out of a program goal of 600,000 smolts, and release them into

[1] Incidental take refers to takings that result from, but are not the purpose of, carrying out an otherwise lawful activity conducted by the Federal agency or applicant. 50 CFR 402.02

the Okanogan River subbasin instead. Consequently the number of naturally spawning hatchery fish in the Methow subbasin is expected to be greatly reduced, by approximately one third, providing a large benefit to the endangered wild UCR spring-run Chinook salmon in the Methow subbasin. Apart from this benefit, life-history strategies for UCR spring-run Chinook salmon will not be affected by this action. The reintroduction effort into the Okanogan River subbasin is not expected to alter fisheries management outside of the action area and not expected to result in an increase in harvest impacts for UCR spring-run Chinook salmon or other listed species.

The proposed reintroduction is unlikely to negatively affect UCR summer/fall-run Chinook salmon populations. Spring-run Chinook salmon typically spawn prior to, and in different habitat than, summer/fall-run Chinook salmon habitat. Competition for spawning sites or redd superimposition is typically rare and in this case is not expected between the two species.

The reintroduction effort will not negatively impact UCR steelhead. Given the life-history differences between UCR spring-run Chinook salmon and steelhead (e.g., discrete run, spawn, and emergence timing), adverse ecological interactions between the experimental spring-run Chinook salmon population and steelhead are expected to be minimal. There is the possibility of some incidental take of UCR steelhead by activities directed at the experimental population (e.g., handling of steelhead that is incidental to the collection of spring-run Chinook broodstock). However, the level of incidental take of UCR steelhead is expected to be minimal, and non-lethal. Additionally, while the limited protective regulations in this final rule will apply to the nonessential experimental population of UCR spring-run Chinook salmon, any actions that might directly or indirectly take steelhead in the Okanogan River subbasin must comply with the 4(d) protective regulations for West Coast steelhead (71 FR 5178; February 1, 2006).

Comment 5: One commenter was concerned about the genetic risks to the Methow population of spring-run Chinook salmon posed by ''alien'' stocks straying into the Methow subbasin from the reintroduction effort in the Okanogan River subbasin.

Response: No ''alien'' stocks of spring-run Chinook salmon would be used in the reintroduction program. The reintroduction effort will use Methow Composite hatchery stock, a stock originating in the Methow subbasin that is currently propagated at the Winthrop National Fish Hatchery. This stock is considered the most closely related to the historical spring Chinook salmon run in the Okanogan River subbasin and determined to be the best for the reintroduction program (see EA Subsection 2.5.3, Authorize the Reintroduction Using a Different Hatchery Stock). As previously mentioned, the proposed reintroduction program will likely reduce the impact of the Methow Composite stock on wild UCR spring-run Chinook salmon in the Methow subbasin by relocating the release of 200,000 smolts from the Methow River to the Okanogan River subbasin.

Comment 6: One commenter was concerned that harvest targeting reintroduced UCR spring-run Chinook salmon stocks would impede recovery by resulting in the over-harvest of co-mingled Methow subbasin salmon and steelhead.

Response: Although the wild Methow and the reintroduced UCR spring-run Chinook salmon populations would co-mingle in the ocean and mainstem Columbia River during adult migration, neither population will be marked with an adipose-fin clip and thereby be subjected to higher sport-harvest rates (see EA Subsection 1.7.1.2, Spring-run Chinook Salmon Reintroduction Program (Methow Composite Stock)). Successful reintroduction of an experimental UCR spring-run Chinook salmon population will expand the spatial distribution of the UCR Spring-run Chinook Salmon ESU in the Upper Columbia River Basin, thus aiding in recovery.

Comment 7: One commenter requested information regarding the effectiveness of a previous reintroduction effort by the CTCR in the Okanogan River subbasin using the Carson stock of hatchery spring-run Chinook salmon.

Response: CTCR staff informed us that Chinook smolts were released in the Okanogan River subbasin from 2002 through 2006 to evaluate the potential for a reintroduction program (see EA Subsection 2.5.3, Authorize the Reintroduction Using a Different Hatchery Stock). The Carson stock releases were terminated in 2006 in favor of obtaining a broodstock source more genetically similar to the historical Okanagan subbasin stock that would better support a long-term reintroduction program. We could not find any published literature on the effectiveness of the Carson spring-run Chinook salmon reintroduction efforts. According to CTCR staff, the 2002–2006 Carson stock reintroduction effort demonstrated that spring-run Chinook salmon could successfully rear in Omak Creek and emigrate out of the Okanogan River subbasin. The study was short-term and limited in scope. Additional information may be obtained from CTCR staff.

Comment 8: One commenter requested information regarding the designation of other nonessential experimental populations, and whether they had been successful.

Response: To date, NMFS has designated two nonessential experimental populations under section 10(j) of the ESA.

On January 15, 2013, NMFS designated Middle Columbia River steelhead reintroduced above the Pelton Round Butte Hydroelectric Project (Oregon) as a non-essential experimental population under section 10(j) of the ESA. For additional information see: *http://www.gpo.gov/fdsys/pkg/FR-2013-01-15/html/2013-00700.html.*

On December 31, 2013, NMFS issued a final rule establishing a nonessential experimental population of Central Valley spring-run Chinook salmon and associated protective regulations under section 4(d) of the ESA. For additional information see: *http://www.westcoast.fisheries.noaa.gov/central_valley/san_joaquin/san_joaquin_reint.html.*

NMFS has not had sufficient time yet to determine the effectiveness of these NMFS 10(j) reintroduction efforts.

The USFWS has used Section 10(j) of the ESA to reintroduce scores of threatened and endangered species throughout the U.S. For additional information see: *http://ecos.fws.gov/ecos/home.action.*

Comment 9: One commenter questioned whether the proposed reintroduction would divert resources away from recovery efforts targeting extant spring-run Chinook salmon populations, and expressed concerns that the reintroduction would impose a financial burden on Okanogan County ratepayers.

Response: Funds allocated to salmon recovery and habitat restoration by Public Utility Districts, the Bonneville Power Administration and other federal agencies are already established and would not change as a result of the reintroduction program. Because there would be no change or redirection of these allocated funds with, or without, the designation of UCR spring-run Chinook salmon as a NEP in the Okanogan River subbasin, the reintroduction program would not

impose any additional financial burden on Okanogan County ratepayers.

Comment 10: Two commenters expressed concern that the introduction of spring-run Chinook salmon would bring additional regulatory burdens, and that the ''threatened'' status accompanying a nonessential experimental population might lead to an upgraded endangered status in the future.

Response: This is a concern that we have specifically sought to address throughout the rulemaking process, and as a result, no additional regulatory burdens would occur as a result of this designation. The underlying intent of the nonessential experimental population is to utilize the flexibility and discretion afforded under section 10(j) of the ESA to manage the introduced population in a manner that minimizes regulatory burdens and the potential risk of ESA liability to the local community. Section 10(j) allows us to promulgate tailored protective regulations to ensure that the potential implication(s) of the introduced population are minimized for private stakeholders. An exception to the take prohibitions was included in the proposed rule to address this specific concern by allowing take of spring-run Chinook in the NEP area that is incidental to an otherwise lawful activity (see section CFR 223.301(c)(3)(vi) in this final rule). In this final rule, we have included additional language in this exception to further protect individuals acting lawfully from the take prohibitions by clarifying that ''any fish that is incidentally taken in a manner allowed by this paragraph may not be collected and must be immediately returned to its habitat.'' This clarifying language will help ensure that an individual does not errantly retain, transport, or possess a fish outside of the Okanogan River NEP Area where the take prohibitions for endangered UCR spring-run Chinook salmon would apply.

The nonessential experimental population designation also minimizes the regulatory burden under section 7 of the ESA for federal actions. Section 10(j) allows that an experimental population deemed ''nonessential'' is treated as a species proposed for listing during interagency consultations under section 7 of the Act, requiring federal agencies to confer (rather than consult) with NMFS on actions that are likely to adversely affect the experimental population. Any recommendations that result from the conference are advisory in nature only, further minimizing any regulatory burden associated with the designation of the experimental population.

There is no risk that the reintroduced population will be upgraded to ''endangered'' status. The ''threatened'' status that accompanies the reintroduced nonessential experimental population designation will remain unchanged ''in perpetuity'' (see EA Subsection 4.1.1.5, Short-term and Long-term Timeframes Used for Analyses of the EA).

Comment 11: One commenter was concerned that the reintroduction will only serve to justify future acquisition of private lands for the purposes of habitat restoration and protection.

Response: We respectfully disagree that the reintroduction program will serve as justification for, or provide an incentive for, enhanced land acquisition for habitat conservation. The reintroduction program does not encourage nor require additional land acquisition to be successful. There is adequate potential spring-run Chinook salmon habitat available in the Okanogan River subbasin to support the reintroduction effort (see EA Subsection 3.5.4, Okanogan Subbasin Habitat Availability). Although the 10(j) designation is not a justification to acquire land for habitat conservation purposes, the CTCR and any other entity retain the legal rights to pursue land acquisitions in the Okanogan River subbasin to protect salmon and steelhead habitat. Similarly, landowners retain the legal right to pursue, accept and reject proposed property transactions as they see fit.

Comment 12: One commenter asked whether non-tribal members would be afforded equal harvest opportunities as tribal members on hatchery-origin UCR spring-run Chinook salmon from the Okanogan River subbasin.

Response: The CTCR is developing a fishery management plan to harvest returns to the Okanogan River subbasin if such harvest is required to reduce the proportion of naturally spawning hatchery-origin spring-run Chinook salmon. Washington Department of Fish and Wildlife has not submitted a harvest plan that would include recreational fishing for spring-run Chinook salmon in the Okanogan River subbasin. However, Washington Department of Fish and Wildlife may desire to coordinate with co-managers to set recreational fishing seasons in addition to regulations already established by the CTCR for tribal fisheries in the mainstem Columbia River above Wells Dam for Leavenworth spring-run Chinook salmon returning to the Chief Joseph Hatchery.

After review of the comments and further consideration, we have decided to adopt the proposed rule that was published in the **Federal Register** (78 FR 63439) on October 24, 2013, with only non-substantive editorial changes. Minor modifications were made to remove unnecessary regulatory language and provide clarity. The modifications make no change to the substance of the rule.

Findings

Based on the best available information, we determine that the release of a NEP of UCR spring-run Chinook salmon in the Okanogan River NEP Area will further the conservation of UCR spring-run Chinook salmon. Fish used for the reintroduction will come from the Methow Composite hatchery program located at Winthrop National Fish Hatchery. These fish are included in the UCR spring-run Chinook salmon ESU and have the best chance to survive and adapt to conditions in the Okanogan River subbasin (Jones *et al.,* 2011). They are expected to remain geographically separate from the existing three extant populations of the UCR spring-run Chinook Salmon ESU during the life stages in which the NEP remains in, or returns to, the Okanogan River; at all times when members of the NEP are downstream of the confluence of the Okanogan and Columbia Rivers, the experimental designation will not apply. Establishment of a fourth population of UCR spring-run Chinook salmon in the Okanogan River subbasin will likely contribute to the viability of the ESU as a whole. This experimental population release is being implemented as recommended in the 2007 Upper Columbia Spring Chinook Salmon and Steelhead Recovery Plan, while at the same time ensuring that the reintroduction will not impose undue regulatory restrictions on landowners and third parties.

We further determine, based on the best available information, that the designated experimental population is not essential to the ESU, because absence of the experimental population will not reduce the likelihood of survival of the ESU. An Okanogan spring-run Chinook salmon population is not a requirement for delisting because the population is extirpated. Implementation of habitat actions in the recovery plan are expected to increase the viability of the Methow, Wenatchee, and Entiat populations to meet ESU recovery criteria without establishment of an Okanogan population. We therefore designate the released

population as a Nonessential Experimental Population.

Information Quality Act and Peer Review

In December 2004, the Office of Management and Budget (OMB) issued a Final Information Quality Bulletin for Peer Review pursuant to the Information Quality Act (Section 515 of Pub. L. 106–554) in the **Federal Register** on January 14, 2005 (70 FR 2664). The Bulletin established minimum peer review standards, a transparent process for public disclosure of peer review planning, and opportunities for public participation with regard to certain types of information disseminated by the Federal Government. The peer review requirements of the OMB Bulletin apply to influential or highly influential scientific information disseminated on or after June 16, 2005. There are no documents supporting this final rule that meet these criteria.

Classification

Executive Order 12866

This final rule has been determined to be not significant under Executive Order (E.O.) 12866.

Regulatory Flexibility Act (5 U.S.C. 601 et seq.)

Under the Regulatory Flexibility Act (as amended by the Small Business Regulatory Enforcement Fairness Act (SBREFA) of 1996; 5 U.S.C. 801 *et seq.*), whenever a Federal agency is required to publish a notice of rulemaking for any proposed or final rule, it must prepare, and make available for public comment, a regulatory flexibility analysis that describes the effect of the rule on small entities (i.e., small businesses, small organizations, and small government jurisdictions). However, no regulatory flexibility analysis is required if the head of an agency certifies that the rule will not have a significant economic impact on a substantial number of small entities. The SBREFA amended the Regulatory Flexibility Act to require Federal agencies to provide a statement of the factual basis for certifying that a rule will not have a significant economic impact on a substantial number of small entities.

The Chief Counsel for Regulation, Department of Commerce, certified to the Chief Counsel for Advocacy at the Small Business Administration at the proposed rule stage that this rule will not have a significant economic effect on a substantial number of small entities. No comments were received regarding the economic impact of this final rule on small entities. The factual basis for this certification was published with the proposed rule and is not repeated here. Because this rule requires no additional regulations on small entities and would impose little to no regulatory requirements for activities within the affected area, a final regulatory flexibility analysis is not required and one was not prepared.

Executive Order 12630

In accordance with E.O. 12630, the final rule does not have significant takings implications. A takings implication assessment is not required because this rule: (1) would not effectively compel a property owner to have the government physically invade their property, and (2) would not deny all economically beneficial or productive use of the land or aquatic resources. This rule would substantially advance a legitimate government interest (conservation and recovery of a listed fish species) and would not present a barrier to all reasonable and expected beneficial use of private property.

Executive Order 13132

In accordance with E.O. 13132, we have determined that this final rule does not have federalism implications as that termed is defined in E.O. 13132.

Paperwork Reduction Act of 1995 (44 U.S.C. 3501 et seq.)

OMB regulations at 5 CFR 1320, which implement provisions of the Paperwork Reduction Act (44 U.S.C. 3501 *et seq.*), require that Federal agencies obtain approval from OMB before collecting information from the public. A Federal agency may not conduct or sponsor, and a person is not required to respond to, a collection of information unless it displays a currently valid OMB control number. This final rule does not include any new collections of information that require approval by OMB under the Paperwork Reduction Act.

National Environmental Policy Act

In compliance with all provisions of the National Environmental Policy Act of 1969, we have analyzed the impact on the human environment and considered a reasonable range of alternatives for this final rule. We made the draft EA available for public comment along with the proposed rule, received one set of comments, and responded to those comments in an Appendix to the EA. We have prepared a final EA and FONSI on this action and have made these documents available for public inspection (see **ADDRESSES** section).

Government-to-Government Relationship With Tribes (E.O. 13175)

E.O. 13175, Consultation and Coordination with Indian Tribal Governments, outlines the responsibilities of the federal government in matters affecting tribal interests. If we issue a regulation with tribal implications (defined as having a substantial direct effect on one or more Indian tribes, on the relationship between the Federal Government and Indian tribes, or on the distribution of power and responsibilities between the Federal Government and Indian tribes) we must consult with those governments or the Federal Government must provide funds necessary to pay direct compliance costs incurred by tribal governments.

The CTCR Reservation lies within the experimental population area. In 2010 staff members of CTCR met with NMFS staff. They discussed the Tribe's developing proposal to reintroduce UCR spring-run Chinook salmon in the Okanogan River subbasin and designate it as an ESA 10(j) experimental population.

Since that meeting CTCR and NMFS staffs have been in frequent contact, including explaining the rule-making process and evaluations involved in reviewing any proposal from the Tribes. These contacts and conversations included working together on public meetings held in Okanogan and Omak, WA (December 5, 2011, and November 5, 2013) and monthly status/update calls describing activity associated with the NEPA and ESA reviews associated with the proposal and final rules.

In addition to frequent contact and coordination among CTCR and senior NMFS technical and policy staff, we also discussed hatchery production changes affected by the Chief Joseph Hatchery and the associated aspects of the 10(j) proposal with the Parties to *United States* v. *Oregon* (Confederated Tribes and Bands of the Yakama Nation, Confederated Tribes of the Umatilla Indian Reservation, Confederated Tribes of the Warm Springs Reservation of Oregon, Nez Perce Tribe, and the Shoshone-Bannock Tribes of the Fort Hall Reservation; the States of Washington, Oregon, and Idaho; and the United States (NMFS, USFWS, Bureau of Indian Affairs, and the Department of Justice)). The current *2008–2017 United States* v. *Oregon Management Agreement* (2008) anticipated the development of the Chief Joseph Hatchery. Footnote #5 to *Table B–1 Spring Chinook Production for Brood*

Years 2008–2017 states that the parties to the Agreement ''anticipate that the proposed Chief Joseph Hatchery is likely to begin operations during the term of this Agreement. The Parties agree to develop options for providing . . . spring Chinook salmon eggs to initiate the Chief Joseph program when it comes online.'' (p. 99). This will include coordinating with the ''Production Advisory Committee'' (PAC) which is responsible to ''coordinate information, review and analyze . . . future natural and artificial production programs . . . and to submit recommendations to the management entities.'' (p. 14) The *U.S.* v *Oregon Policy Committee,* in February 2012, approved changes to the Agreement that identified the marking and transfer of 200,000 UCR spring-run Chinook salmon pre-smolts to Okanogan River acclimation ponds, and the prioritization of this production, in relation to other hatchery programs in the Methow River subbasin. The footnote has been modified to reflect these changes. The PAC includes technical representatives from '' . . . the Warm Springs Tribe, the Umatilla Tribes, the Nez Perce Tribe, the Yakama Nation, and the Shoshone-Bannock Tribes.'' (p.14). It is these technical representatives who will review adult management proposals associated with this final rule. Those representatives are senior staff from the identified tribes and will be in communication with their respective governments. We invite meetings with tribes to have detailed discussions that could lead to government-to-government consultation meetings with tribal governments. We will continue to coordinate with the affected tribes.

References Cited

A complete list of all references cited in this final rule is available upon request (see **FOR FURTHER INFORMATION CONTACT**).

Dated: July 7, 2014.

Samuel D. Rauch III,

Deputy Assistant Administrator for Regulatory Programs, National Marine Fisheries Service.

List of Subjects in 50 CFR Part 223

Endangered and threatened species, Exports, Imports.

For the reasons set out in the preamble, part 223 of chapter II, title 50 of the Code of Federal Regulations, is amended as follows.

PART 223—THREATENED MARINE AND ANADROMOUS SPECIES

■ 1. The authority citation for part 223 continues to read as follows:

Authority: 16 U.S.C. 1531 et seq.; subpart B, §§ 223.201 and 223.202 also issued under 16 U.S.C. 1361 et seq.; 16 U.S.C. 5503(d) for § 223.206(d)(9).

■ 2. In § 223.102, in the table in paragraph (e) under ''Fishes,'' add an entry for ''Salmon, Chinook (Upper Columbia River spring-run ESU–XN)'' after the entry for ''Salmon, Chinook (Upper Willamette River ESU)'' and before the entry for ''Salmon, Chum (Columbia River ESU)'' to read as follows:

§ 223.102 Enumeration of threatened marine and anadromous species.

* * * * *

(e) * * *

Species [1]			Citation(s) for listing determination(s)	Critical habitat	ESA rules
Common name	Scientific name	Description of listed entity			
*	*	*	*	*	*
FISHES					
*	*	*	*	*	*
Salmon, Chinook (Upper Columbia River spring-run ESU–XN).	*Oncorhynchus tshawytscha.*	Upper Columbia River spring-run Chinook salmon only when, and at such times, as they are found in the mainstem or tributaries of the Okanogan River from the Canada-United States border to the confluence of the Okanogan River with the Columbia River, Washington.	[Insert **Federal Register** citation] 7/11/14.	NA	223.301
*	*	*	*	*	*

[1] Species includes taxonomic species, subspecies, distinct population segments (DPSs) (for a policy statement, see 61 FR 4722, February 7, 1996), and evolutionarily significant units (ESUs) (for a policy statement, see 56 FR 58612, November 20, 1991).

* * * * *

■ 3. In § 223.301, add paragraph (c) to read as follows:

§ 223.301 Special rules—marine and anadromous fishes.

* * * * *

(c) Okanogan River UCR spring-run Chinook Salmon Experimental Population (*Oncorhynchus tshawytscha*). (1) The Upper Columbia River (UCR) spring-run Chinook salmon population located in the geographic area identified in paragraph (c)(5) of this section shall comprise the Okanogan River nonessential experimental population (NEP), and shall be treated as a ''threatened species'' pursuant to 16 U.S.C. 1539(j)(2)(C).

(2) *Prohibitions.* Except as provided in paragraph (c)(3) of this section, the prohibitions of section 9(a)(1) of the ESA (16 U.S.C. 1538(a)(1)) relating to endangered species apply to UCR spring-run Chinook salmon in the Okanogan River NEP Area, defined in paragraph (c)(5) of this section.

(3) *Exceptions to the Application of Section 9 Take Prohibitions in the Experimental Population Area.* Take of UCR spring-run Chinook salmon that is otherwise prohibited by paragraph (c)(2) of this section and 50 CFR 223.203(a) in the Okanogan River NEP Area is allowed, except as otherwise noted, provided it falls within one of the following categories:

(i) Any activity taken pursuant to a valid permit issued by NMFS under § 223.203(b)(1) and (7) for scientific research activities;

(ii) Aid, disposal, or salvage of fish by authorized agency personnel acting in compliance with 50 CFR 223.203(b)(3);

(iii) Activities associated with artificial propagation of the experimental population under an approved Hatchery Genetic Management Plan (HGMP) that complies with the requirements of 50 CFR 223.203(b)(5);

(iv) Any harvest-related activity undertaken by a tribe, tribal member, tribal permittee, tribal employee, or tribal agent consistent with tribal harvest regulations and an approved Tribal Resource Management Plan (TRMP) that complies with the requirements of 50 CFR 223.204;

(v) Any harvest-related activity consistent with state harvest regulations and an approved Fishery Management Evaluation Plan (FMEP) that complies with the requirements of 50 CFR 223.203(b)(4); or

(vi) Any take that is incidental to an otherwise lawful activity, provided that the taking is unintentional; not due to negligent conduct; and incidental to, and not the purpose of, the carrying out of the otherwise lawful activity. Otherwise lawful activities include, but are not limited to, agricultural, water management, construction, recreation, navigation, or forestry practices, when such activities are in full compliance with all applicable laws and regulations. Any fish that is incidentally taken in a manner allowed by this paragraph may not be collected and must be immediately returned to its habitat.

(4) *Prohibited take outside the NEP area.* Outside the Okanogan River NEP Area, UCR spring-run Chinook salmon are not considered to be part of the NEP, irrespective of their origin, and therefore the take prohibitions for endangered UCR spring-run Chinook salmon apply.

(5) *Geographic extent of the Okanogan River NEP Area.* The geographic boundary defining the Okanogan River NEP Area for UCR spring-run Chinook salmon is the mainstem and all tributaries of the Okanogan River between the Canada-United States border to the confluence of the Okanogan River with the Columbia River. All UCR spring-run Chinook salmon in this defined Okanogan River NEP Area are considered part of the NEP, irrespective of where they originated.

[FR Doc. 2014–16255 Filed 7–10–14; 8:45 am]

BILLING CODE 3510–22–P

DEPARTMENT OF COMMERCE

National Oceanic and Atmospheric Administration

50 CFR Part 679

[Docket No. 131021878–4158–02]

RIN 0648–XD372

Fisheries of the Exclusive Economic Zone Off Alaska; ''Other Flatfish'' in the Bering Sea and Aleutian Islands Management Area

AGENCY: National Marine Fisheries Service (NMFS), National Oceanic and Atmospheric Administration (NOAA), Commerce.

ACTION: Temporary rule; apportionment of reserves; request for comments.

SUMMARY: NMFS apportions amounts of the non-specified reserve to the initial total allowable catch (TAC) and TAC of ''other flatfish'' in the Bering Sea and Aleutian Islands (BSAI) management area. This action is necessary to allow the fisheries to continue operating. It is intended to promote the goals and objectives of the fishery management plan for the BSAI management area.

DATES: Effective July 8, 2014, through 2400 hrs, Alaska local time, December 31, 2014. Comments must be received at the following address no later than 4:30 p.m., Alaska local time, July 23, 2014.

ADDRESSES: You may submit comments on this document, identified by NOAA–NMFS–2013–0152, by any of the following methods:

- *Electronic Submission:* Submit all electronic public comments via the Federal e-Rulemaking Portal. Go to *www.regulations.gov/#!docketDetail;D=NOAA-NMFS-2013-0152,* click the ''Comment Now!'' icon, complete the required fields, and enter or attach your comments.
- *Mail:* Submit written comments to Glenn Merrill, Assistant Regional Administrator, Sustainable Fisheries Division, Alaska Region NMFS, Attn: Ellen Sebastian. Mail comments to P.O. Box 21668, Juneau, AK 99802–1668.
- *Fax:* 907–586–7557; Attn: Ellen Sebastian.

Instructions: Comments sent by any other method, to any other address or individual, or received after the end of the comment period, may not be considered by NMFS. All comments received are a part of the public record and will generally be posted for public viewing on *www.regulations.gov* without change. All personal identifying information (e.g., name, address), confidential business information, or otherwise sensitive information submitted voluntarily by the sender will be publicly accessible. NMFS will accept anonymous comments (enter ''N/A'' in the required fields if you wish to remain anonymous). Attachments to electronic comments will be accepted in Microsoft Word, Excel, or Adobe PDF file formats only.

FOR FURTHER INFORMATION CONTACT: Steve Whitney, 907–586–7228.

SUPPLEMENTARY INFORMATION: NMFS manages the groundfish fishery in the (BSAI) exclusive economic zone according to the Fishery Management Plan for Groundfish of the Bering Sea and Aleutian Islands Management Area (FMP) prepared by the North Pacific Fishery Management Council under authority of the Magnuson-Stevens Fishery Conservation and Management Act. Regulations governing fishing by U.S. vessels in accordance with the FMP appear at subpart H of 50 CFR part 600 and 50 CFR part 679.

The 2014 initial TAC and TAC of ''other flatfish'' in the BSAI were established as 2,253 metric tons (mt) and 2,650 mt, respectively, by the final 2014 and 2015 harvest specifications for groundfish of the BSAI (79 FR 12108, March 4, 2014). In accordance with § 679.20(a)(3) the Regional Administrator, Alaska Region, NMFS, has reviewed the most current available data and finds that the ITAC and TAC for ''other flatfish'' in the BSAI needs to be supplemented from the non-specified reserve to promote efficiency in the utilization of fishery resources in the BSAI and allow fishing operations to continue.

Therefore, in accordance with § 679.20(b)(3), NMFS apportions from the non-specified reserve of groundfish 2,247 mt to the ITAC and 1,850 mt to the TAC for ''other flatfish'' in the BSAI. These apportionments are consistent with § 679.20(b)(1)(i) and do not result in overfishing of any target species because the revised TAC is equal to or less than the specifications of the acceptable biological catch of 12,400 mt in the final 2014 and 2015 harvest specifications for groundfish in the BSAI (79 FR 12108, March 4, 2014).

The harvest specification for the 2014 TAC included in the harvest specifications for groundfish in the BSAI is revised to 4,500 mt for ''other flatfish.''

Classification

This action responds to the best available information recently obtained from the fishery. The Assistant Administrator for Fisheries, NOAA, (AA) finds good cause to waive the requirement to provide prior notice and

opportunity for public comment pursuant to the authority set forth at 5 U.S.C. 553(b)(B) and § 679.20(b)(3)(iii)(A) as such a requirement is impracticable and contrary to the public interest. This requirement is impracticable and contrary to the public interest as it would prevent NMFS from responding to the most recent fisheries data in a timely fashion and would delay the apportionment of the non-specified reserves of groundfish to the ''other flatfish'' fishery in the BSAI. Immediate notification is necessary to allow for the orderly conduct and efficient operation of this fishery, to allow the industry to plan for the fishing season, and to avoid potential disruption to the fishing fleet and processors. NMFS was unable to publish a notice providing time for public comment because the most recent, relevant data only became available as of June 26, 2014.

The AA also finds good cause to waive the 30-day delay in the effective date of this action under 5 U.S.C. 553(d)(3). This finding is based upon the reasons provided above for waiver of prior notice and opportunity for public comment.

Under § 679.20(b)(3)(iii), interested persons are invited to submit written comments on this action (see **ADDRESSES**) until July 23, 2014.

This action is required by § 679.20 and is exempt from review under Executive Order 12866.

Authority: 16 U.S.C. 1801 *et seq.*

Dated: July 8, 2014.

Emily H. Menashes,

Acting Director, Office of Sustainable Fisheries, National Marine Fisheries Service.

[FR Doc. 2014–16254 Filed 7–8–14; 4:15 pm]

BILLING CODE 3510–22–P

Proposed Rules

Federal Register
Vol. 79, No. 133
Friday, July 11, 2014

This section of the FEDERAL REGISTER contains notices to the public of the proposed issuance of rules and regulations. The purpose of these notices is to give interested persons an opportunity to participate in the rule making prior to the adoption of the final rules.

DEPARTMENT OF TRANSPORTATION

Federal Aviation Administration

14 CFR Part 39

[Docket No. FAA–2014–0328; Directorate Identifier 2014–NE–07–AD]

RIN 2120–AA64

Airworthiness Directives; Rolls-Royce plc Turbofan Engines

AGENCY: Federal Aviation Administration (FAA), DOT.

ACTION: Notice of proposed rulemaking (NPRM).

SUMMARY: We propose to adopt a new airworthiness directive (AD) for all Rolls-Royce plc (RR) RB211 Trent 875–17, 877–17, 884–17, 884B–17, 892–17, 892B–17, and 895–17 turbofan engines. This proposed AD was prompted by failure of the intermediate pressure (IP) turbine disk drive arm on an RR RB211 Trent turbofan engine. This proposed AD would require modification of the engine by removing any electronic engine control (EEC) that incorporates EEC software standard prior to version B7.2 and installing an EEC eligible for installation. We are proposing this AD to prevent overspeed failure of the turbine blades or the IP turbine disk, which could lead to uncontained blade or disk release, damage to the engine, and damage to the airplane.

DATES: We must receive comments on this proposed AD by September 9, 2014.

ADDRESSES: You may send comments by any of the following methods:

- Federal eRulemaking Portal: Go to *http://www.regulations.gov* and follow the instructions for sending your comments electronically.
- Mail: Docket Management Facility, U.S. Department of Transportation, 1200 New Jersey Avenue SE., West Building Ground Floor, Room W12–140, Washington, DC 20590–0001.
- Hand Delivery: Deliver to Mail address above between 9 a.m. and 5 p.m., Monday through Friday, except Federal holidays.
- Fax: 202–493–2251.

For service information identified in this proposed AD, contact Rolls-Royce plc, Corporate Communications, P.O. Box 31, Derby, England, DE248BJ; phone: 011–44–1332–242424; fax: 011–44–1332–249936; email: *http://www.rolls-royce.com/contact/civil_team.jsp;* or Web site: *https://www.aeromanager.com.* You may view this service information at the FAA, Engine & Propeller Directorate, 12 New England Executive Park, Burlington, MA. For information on the availability of this material at the FAA, call 781–238–7125.

Examining the AD Docket

You may examine the AD docket on the Internet at *http://www.regulations.gov* by searching for and locating Docket No. FAA–2014–0328; or in person at the Docket Operations office between 9 a.m. and 5 p.m., Monday through Friday, except Federal holidays. The AD docket contains this proposed AD, the mandatory continuing airworthiness information (MCAI), the regulatory evaluation, any comments received, and other information. The address for the Docket Office (phone: 800–647–5527) is in the **ADDRESSES** section. Comments will be available in the AD docket shortly after receipt.

FOR FURTHER INFORMATION CONTACT: Wego Wang, Aerospace Engineer, Engine Certification Office, FAA, Engine & Propeller Directorate, 12 New England Executive Park, Burlington, MA 01803; phone: 781–238–7134; fax: 781–238–7199; email: *wego.wang@faa.gov.*

SUPPLEMENTARY INFORMATION:

Comments Invited

We invite you to send any written relevant data, views, or arguments about this proposed AD. Send your comments to an address listed under the **ADDRESSES** section. Include ''Docket No. FAA–2014–0328; Directorate Identifier 2014–NE–07–AD'' at the beginning of your comments. We specifically invite comments on the overall regulatory, economic, environmental, and energy aspects of this proposed AD. We will consider all comments received by the closing date and may amend this proposed AD based on those comments.

We will post all comments we receive, without change, to *http://www.regulations.gov,* including any personal information you provide. We will also post a report summarizing each substantive verbal contact with FAA personnel concerning this proposed AD.

Discussion

The European Aviation Safety Agency (EASA), which is the Technical Agent for the Member States of the European Community, has issued EASA AD 2014–0051, dated March 6, 2014 (referred to hereinafter as ''the MCAI''), to correct an unsafe condition for the specified products. The MCAI states:

> A Trent engine experienced an engine internal fire, caused by combustion of carbon deposits inside the high/intermediate (HP/IP) oil vent tubes. The consequent chain of events resulted in the failure of the IP turbine disk drive arm. Similar engine architecture exists on Trent 800 series engines.
>
> This condition, if not corrected, could lead to uncontained multiple turbine blade failures or an IP turbine disk burst, possibly resulting in damage to, and reduced control of, the aeroplane.

This AD requires incorporating a revised EEC software standard that can prevent an unsafe chain of events that occur subsequent to an internal engine fire. The revised EEC software standard can properly adjust fuel flow, shut down the engine, prevent an overspeed condition, and indirectly extinguish the fire.

You may obtain further information by examining the MCAI in the AD docket on the Internet at *http://www.regulations.gov* by searching for and locating Docket No. FAA–2014–0328.

Relevant Service Information

RR has issued Alert Service Bulletin No. RB.211–73–AH001, dated July 17, 2013. The ASB provides guidance for removal and replacement of the affected EEC.

FAA's Determination and Requirements of This Proposed AD

This product has been approved by the aviation authority of the United Kingdom, and is approved for operation in the United States. Pursuant to our bilateral agreement with the European Community, EASA has notified us of the unsafe condition described in the MCAI and service information referenced above. We are proposing this AD because we evaluated all information provided by EASA and determined the unsafe condition exists

and is likely to exist or develop on other products of the same type design. This proposed AD would require modification of the engine by removing any EEC that incorporates EEC software standard prior to version B7.2 and installing an EEC eligible for installation.

Costs of Compliance

We estimate that this proposed AD would affect about 140 engines installed on airplanes of U.S. registry. We also estimate that it would take about 2 hours per product to comply with this proposed AD. The average labor rate is $85 per hour. Required parts cost about $170. Based on these figures, we estimate the cost of this proposed AD on U.S. operators to be $23,800.

Authority for This Rulemaking

Title 49 of the United States Code specifies the FAA's authority to issue rules on aviation safety. Subtitle I, section 106, describes the authority of the FAA Administrator. ''Subtitle VII: Aviation Programs,'' describes in more detail the scope of the Agency's authority.

We are issuing this rulemaking under the authority described in ''Subtitle VII, Part A, Subpart III, Section 44701: General requirements.'' Under that section, Congress charges the FAA with promoting safe flight of civil aircraft in air commerce by prescribing regulations for practices, methods, and procedures the Administrator finds necessary for safety in air commerce. This regulation is within the scope of that authority because it addresses an unsafe condition that is likely to exist or develop on products identified in this rulemaking action.

Regulatory Findings

We determined that this proposed AD would not have federalism implications under Executive Order 13132. This proposed AD would not have a substantial direct effect on the States, on the relationship between the national Government and the States, or on the distribution of power and responsibilities among the various levels of government.

For the reasons discussed above, I certify this proposed regulation:

(1) Is not a ''significant regulatory action'' under Executive Order 12866,

(2) Is not a ''significant rule'' under the DOT Regulatory Policies and Procedures (44 FR 11034, February 26, 1979),

(3) Will not affect intrastate aviation in Alaska to the extent that it justifies making a regulatory distinction, and

(4) Will not have a significant economic impact, positive or negative, on a substantial number of small entities under the criteria of the Regulatory Flexibility Act.

List of Subjects in 14 CFR Part 39

Air transportation, Aircraft, Aviation safety, Incorporation by reference, Safety.

The Proposed Amendment

Accordingly, under the authority delegated to me by the Administrator, the FAA proposes to amend 14 CFR part 39 as follows:

PART 39—AIRWORTHINESS DIRECTIVES

■ 1. The authority citation for part 39 continues to read as follows:

Authority: 49 U.S.C. 106(g), 40113, 44701.

§ 39.13 [Amended]

■ 2. The FAA amends § 39.13 by adding the following new airworthiness directive (AD):

Rolls-Royce plc: Docket No. FAA–2014–0328; Directorate Identifier 2014–NE–07–AD.

(a) Comments Due Date

We must receive comments by September 9, 2014.

(b) Affected ADs

None.

(c) Applicability

This AD applies to all Rolls-Royce plc (RR) RB211 Trent 875–17, 877–17, 884–17, 884B–17, 892–17, 892B–17, and 895–17 turbofan engines.

(d) Reason

This AD was prompted by failure of the intermediate pressure (IP) turbine disk drive arm on an RR RB211 Trent turbofan engine. We are issuing this AD to prevent overspeed failure of the turbine blades or the IP turbine disk, which could lead to uncontained blade or disk release, damage to the engine, and damage to the airplane.

(e) Actions and Compliance

Unless already done, within 12 months after the effective date of this AD, remove any electronic engine control (EEC) that incorporates EEC software standard prior to version B7.2 and install an EEC eligible for installation.

(f) Installation Prohibition

After modification of an engine as required by paragraph (e) of this AD, do not install an EEC that incorporates a software standard prior to version B7.2 onto any engine.

(g) Alternative Methods of Compliance (AMOCs)

The Manager, Engine Certification Office, FAA, may approve AMOCs to this AD. Use the procedures found in 14 CFR 39.19 to make your request.

(h) Related Information

(1) For more information about this AD, contact Wego Wang, Aerospace Engineer, Engine Certification Office, FAA, Engine & Propeller Directorate, 12 New England Executive Park, Burlington, MA 01803; phone: 781–238–7134; fax: 781–238–7199; email: *wego.wang@faa.gov.*

(2) Refer to MCAI European Aviation Safety Agency AD 2014–0051, dated March 6, 2014, for more information. You may examine the MCAI in the AD docket on the Internet at *http://www.regulations.gov* by searching for and locating it in Docket No. FAA–2014–0328.

(3) RR Alert Service Bulletin No. RB.211–73–AH001, dated July 17, 2013, pertains to the subject of this AD and can be obtained from Rolls-Royce plc using the contact information in paragraph (h)(4) of this AD.

(4) For service information identified in this AD, contact Rolls-Royce plc, Corporate Communications, P.O. Box 31, Derby, England, DE248BJ; phone: 011–44–1332–242424; fax: 011–44–1332–249936; email: *http://www.rolls-royce.com/contact/civil_team.jsp;* or Web site: *https://www.aeromanager.com.*

(5) You may view this service information at the FAA, Engine & Propeller Directorate, 12 New England Executive Park, Burlington, MA. For information on the availability of this material at the FAA, call 781–238–7125.

Issued in Burlington, Massachusetts, on July 2, 2014.

Carlos A. Pestana,

Acting Assistant Directorate Manager, Engine & Propeller Directorate, Aircraft Certification Service.

[FR Doc. 2014–16257 Filed 7–10–14; 8:45 am]

BILLING CODE 4910–13–P

DEPARTMENT OF HOUSING AND URBAN DEVELOPMENT

24 CFR Parts 5 and 943

[Docket No. FR–5578–P–01]

RIN 2577–AC89

Streamlining Requirements Applicable to Formation of Consortia by Public Housing Agencies

AGENCY: Office of the Assistant Secretary for Public and Indian Housing, HUD.

ACTION: Proposed rule.

SUMMARY: This proposed rule would revise HUD's public housing agency (PHA) consortium regulations. These regulations provide the procedures by which PHAs may choose to administer their public housing and Section 8 programs. The changes proposed are intended to increase administrative efficiencies associated with forming a consortium and to help ensure maximum family choice in locating suitable housing. The proposed rule

focuses mainly on establishing a new category of consortia for administration of the Section 8 Housing Choice Voucher (HCV) program. This type of consortium would be comprised of multiple PHAs that would become a single PHA, with a single jurisdiction and a single set of reporting and audit requirements, for purposes of administering the Section 8 HCV program. This type of consortium would be in addition to the consortium structure established in current consortium regulations which the Department is referring to as multiple-ACC consortium in this proposed rule. The proposed rule would also revise the categories of Section 8 programs eligible to be administered under a consortium, and establish new requirements regarding the timeframes for the establishment and dissolution of a consortium. Further, HUD has taken the opportunity afforded by this proposed rule to make several technical, nonsubstantive changes to improve the clarity and organization of the consortia regulations. HUD has also taken the opportunity afforded by this proposed rule to amend the definition of ''public housing agency'' to be consistent with amendments to the United States Housing Act of 1937 (1937 Act), as provided for in the Consolidated Appropriations Act of 2014.

DATES: *Comments Due Date:* September 9, 2014.

ADDRESSES: Interested persons are invited to submit comments regarding this proposed rule to the Regulations Division, Office of General Counsel, 451 7th Street SW., Room 10276, Department of Housing and Urban Development, Washington, DC 20410–0500. Communications must refer to the above docket number and title. There are two methods for submitting public comments. All submissions must refer to the above docket number and title.

1. Submission of Comments by Mail. Comments may be submitted by mail to the Regulations Division, Office of the General Counsel, Department of Housing and Urban Development, 451 7th Street SW., Room 10276, Washington, DC 20410–0001.

2. Electronic Submission of Comments. Interested persons may submit comments electronically through the Federal eRulemaking Portal at *www.regulations.gov.* HUD strongly encourages commenters to submit comments electronically. Electronic submission of comments allows the commenter maximum time to prepare and submit a comment, ensures timely receipt by HUD, and enables HUD to make them immediately available to the public. Comments submitted electronically through the *www.regulations.gov* Web site can be viewed by other commenters and interested members of the public. Commenters should follow the instructions provided on that site to submit comments electronically.

Note: To receive consideration as public comments, comments must be submitted through one of the two methods specified above. Again, all submissions must refer to the docket number and title of the rule. *No Facsimile Comments.* Facsimile (fax) comments are not acceptable.

Public Inspection of Public Comments. All properly submitted comments and communications submitted to HUD will be available for public inspection and copying between 8 a.m. and 5 p.m. weekdays at the above address. Due to security measures at the HUD Headquarters building, an advance appointment to review the public comments must be scheduled by calling the Regulations Division at 202–708–3055 (this is not a toll-free number). Individuals with speech or hearing impairments may access this number via TTY by calling the Federal Relay Service at 800–877–8339 (this is a toll-free number). Copies of all comments submitted are available for inspection and download at *www.regulations.gov.*

FOR FURTHER INFORMATION CONTACT: Michael Dennis, Director, Office of Housing Voucher Programs, Office of Public and Indian Housing, Department of Housing and Urban Development, 451 7th Street SW., Room 4228, Washington, DC 20410–5000; telephone number 202–402–3882 (this is not a toll-free number). Persons with hearing or speech impairments may access these numbers through TTY by calling the Federal Relay Service at 800–877–8339 (this is a toll-free number).

SUPPLEMENTARY INFORMATION:

I. Executive Summary

A. Purpose of Regulatory Action

HUD's current public housing consortium regulation poses hurdles to forming consortia. Through this proposed rulemaking, HUD is modifying its regulations to encourage PHAs to form consortia, as doing so enables PHAs to combine administrative functions to increase efficiency and effectiveness, may benefit smaller PHAs with economies-of-scale, and improves opportunities for housing choices. In particular, this rule seeks to increase administrative efficiencies associated with forming a consortium by improving the process for how consortia are formed, structured and dissolved. In addition, this rule supports PHAs mission to provide more suitable housing options for participants by allowing PHAs to operate as one entity throughout a region, as an incentive to PHAs to form consortia.

B. Summary of the Major Provisions of the Regulatory Action in Question

This rule would establish a new category of consortia for administration of the Section 8 HCV program, called the single-Annual Contributions Contract (ACC) consortium. The proposed rule clarifies that PHAs are not precluded from joining a consortium solely because the PHA is the owner of a unit or project receiving rental assistance under section 8(o) of the 1937 Act (42 U.S.C. 1437f). The proposed rule describes how and when consortia can be formed and dissolved, the requirement that a single 5-Year Plan and Annual Plan must be submitted as a condition for formation of the consortium, and fiscal year end requirements that would be applicable to single-ACC and multiple-ACC consortia.

Although the proposed rule is designed to encourage formation of consortia, the proposed rule would impose certain limitations. For example, Moving-to-Work (MTW) agencies may not form or join single-ACC or multiple-ACC consortia because MTW agencies operate under a different set of statutory and regulatory requirements.

II. Background

The 1937 Act (42 U.S.C. 1437 *et seq.*) authorizes HUD's public housing and assisted housing programs, including the Section 8 HCV program. Section 13 of the 1937 Act (42 U.S.C. 1437k)[1] authorizes ''any 2 or more'' public housing agencies (PHAs) to form consortia ''for the purpose of administering any or all of the housing programs'' of those PHAs. HUD's regulations implementing section 13 of the 1937 Act are codified at 24 CFR part 943.[2] The part 943 regulations describe the programs—specifically, public housing and the Section 8 programs—for which the housing providers participating in those programs are eligible to form consortia. The regulations also establish the minimum requirements relating to the formation and operation of a consortium and the

[1] As amended by section 515 of the Quality Housing and Work Responsibility Act of 1998 (Pub. L. 105–276, 112 Stat. 2549, approved January 27, 1998).

[2] HUD's final rule establishing 24 CFR part 943 was published on November 29, 2000 (65 FR 71204).

minimum requirements of consortium agreements.

A consortium enables PHAs to combine administrative functions to increase efficiency and effectiveness, may benefit smaller PHAs with economies-of-scale, and improves opportunities for greater resident housing choice in the same region.

Through this proposed rule, HUD is seeking to improve the process on how consortia are formed, structured, and dissolved. This proposed rule is also intended to encourage more PHAs to form consortia, which allows ultimately HUD and PHAs to provide more effective and efficient housing assistance to low-income families. This proposed rule has two primary goals: (1) Increase administrative efficiencies associated with forming a consortium; and (2) facilitate maximum resident choice in locating suitable housing within a region through consortia, without the administrative burden associated with the portability process and other policies.

III. Summary of Proposed Changes to the Consortia of Public Housing Agencies

This section of the preamble highlights key features of the proposed revisions to the consortium regulations.

1. *Change in definition of ''public housing agency.''* Section 212 of the Consolidated Appropriations Act of 2014 (Pub. L. 113–76, 128 Stat. 5, approved January 17, 2014) amends the definition of ''public housing agency'' at subparagraph (A) of section 3(b)(6) of the 1937 Act (42 U.S.C. 1437a(b)(6)(A)) to include in its general definition ''a consortium of such entities or bodies as approved by the Secretary.'' [3] As a result, HUD is taking the opportunity afforded by this proposed rule to amend the definition of ''public housing agency'' in its regulations at 24 CFR 5.100 to be consistent with the statutory definition of ''public housing agency.''

2. *Single-Annual Contributions Contract consortium for the Section 8 HCV program.* Section 3(b)(6)(B) of the 1937 Act (42 U.S.C. 1437a(b)(6)) defines the term ''public housing agency'' to include a consortium of PHAs that HUD ''determines has the capacity and capability to administer'' the Section 8 HCV program (including project-based vouchers and project-based certificates). Under the statutory language, such a consortium is a separate legal entity and a single PHA for purposes of administering the Section 8 HCV program. HUD is proposing to implement the statutory authority granted under section 3(b)(6)(B) of the 1937 Act by establishing a new category of consortium for the administration of the Section 8 HCV program, to be known as a single-ACC consortium.

While enactment of Section 212 of the Consolidated Appropriations Act of 2014 (as described in Section III.1 above) affords the opportunity to extend single-ACC consortia beyond the Section 8 HCV program, the Department has determined to move forward with publication of this proposed rule, which applies single-ACC consortia formation only to the Section 8 HCV program, so as to not further delay the opportunity for PHAs that desire to enter into this consortia type for their Section 8 HCV programs. However, in the future, the Department plans to further revise consortia regulations to allow single-ACC consortia formations, where applicable, beyond the section 8 HCV program. The decision on whether to form a single-ACC consortium is voluntary and PHAs may elect to form a multiple-ACC or a single-ACC consortium for administration of their Section 8 HCV programs.

The jurisdiction for the single-ACC consortium includes all member PHA jurisdictions. For purposes of Section 8 HCV program administration, jurisdictional boundaries between individual consortium members will cease to exist during the term of the single-ACC consortium. Accordingly, the state and local law of each of the participating PHAs must authorize the operation of the HCV program across established jurisdictional boundaries.

HUD anticipates that PHAs that form a single-ACC consortium for the purposes of voucher administration will see increased administrative efficiencies through one set of reporting and audit requirements, consolidated operations, a centralized waiting list, and a single set of policies and procedures. Families are also better served through the pooling of assets that occurs when forming a single-ACC consortium. Specifically, when resources are consolidated, the combined Section 8 HCV program resources of all member agencies may assist in serving more families in the community.

While the benefits of a single-ACC consortium are realized through an actual consolidation of different PHA Section 8 HCV programs, the single-ACC consortium could allow greater autonomy for consortium members that may still want to retain their own public housing or other housing assistance programs. Additionally, PHAs may choose to form a consortium advisory board or other mechanisms for retaining a greater level of local control in the consortium. Consortium members may also subsequently withdraw from a consortium and return to operating as a single PHA (within regulations and any contractual obligations to the consortium) for purposes of Section 8 HCV program administration.

3. *Eligibility of PHA owners of units or projects receiving rental assistance under section 8(o) of the 1937 Act.* Under the proposed rule, PHAs that are owners of units receiving tenant-based rental assistance, or projects receiving project-based rental assistance, under section 8(o) of the 1937 Act (42 U.S.C. 1437f(o)) would not be precluded from joining either a single-ACC or multiple-ACC consortium, provided that such Section 8 projects and units are administered in accordance with applicable regulations. Section 943.115(b)(3) of the current consortia regulations provides that formation of consortia does not apply to ''a PHA in its capacity as owner of a Section 8 project.'' The proposed rule would clarify that PHAs are not precluded from joining a consortium solely because the PHA is the owner of a unit or project receiving rental assistance under section 8(o) of the 1937 Act. Instead, the consortium would be required to administer such units or projects in accordance with applicable regulations.

4. *Consortium effective date and advance written notice to HUD.* The proposed rule specifies that formation of a consortium will be effective as of January 1 of the following year, and that HUD must be notified of the intent to form a consortium at least 120 days in advance, in writing. HUD may approve an exception to this requirement.

5. *Consortia must exist for 5 years before they may dissolve.* The proposed rule would require a consortium to exist for 5 years before any withdrawal from, or dissolution of, the consortium is allowed. HUD may (based upon a showing of good cause from the consortium) allow dissolution of, or withdrawal from, a consortium prior to completion of the 5-year term. The 5-year term represents the minimum amount of time a consortium must exist before it may dissolve or before members may withdraw from the consortium; however, the consortium may continue to exist beyond the 5-year term, unless dissolved. HUD proposes

[3] Section 3(b)(6)(B)(i) of the 1937 Act already included ''a consortia of public housing agencies that the Secretary determines has the capacity and capability to administer a program for assistance under such section in an efficient manner'' in the definition of ''public housing agency'' for the Section 8 program. As a result of section 212 of the Consolidated Appropriations Act of 2014, inclusion of consortia in the definition of a public housing agency will no longer be limited solely to the Section 8 program.

requirement of an initial 5-year term to prevent premature dissolutions or withdrawals from a consortium, to encourage consortium formations that are carefully planned and executed, and in consideration of the time and resources involved in the PHAs' and HUD's processing of a consortium. Moreover, the dissolution of a consortium must be consistent with any actions to resolve outstanding civil rights actions of the consortium.

6. *Submission of a single PHA Plan.* The proposed rule specifies that a single 5-Year Plan and Annual Plan must be submitted for the consortium. The PHA Plan for the consortium shall establish a single set of policies for the consortium as a whole; therefore, consortium members will be bound by the single PHA Plan and will not need to submit individual PHA Plans to HUD for the duration of their inclusion in the consortium. In establishing a single PHA Plan for the consortium, PHAs must evaluate the different set of policies in the existing PHA Plan for each individual PHA wishing to join the consortium and agree on a single set of policies most appropriate for the administration of the consortium.

7. *Fiscal Year End Requirement.* The proposed rule specifies that, upon formation, PHAs joining a single-ACC consortium must adopt a new fiscal year end for the consortium. PHAs forming a multiple-ACC consortium must all adopt the same fiscal year end. Although the rule requires consortium formation to become effective on January 1, a consortium's fiscal year end does not necessarily have to coincide with that date.

8. *MTW PHAs not eligible to join a consortium.* The proposed rule specifies that MTW agencies may not form or join single-ACC or multiple-ACC consortia. MTW agencies are not eligible to form or join a consortium because MTW agencies operate under a different set of statutory and regulatory requirements. MTW flexibilities accrue to an individual PHA; therefore, an MTW agency could not transfer its unique flexibilities to other PHAs by way of forming a consortium. Also, an MTW PHA's ability to use program funds interchangeably (''fungibility'') would create an administrative burden to other consortium members in terms of tracking, monitoring, and reporting the use of program funds and would directly conflict with the nature of the single-ACC consortium (which is considered a single PHA, and applies only for administration of the Section 8 HCV program). Lastly, the establishment of a single-ACC consortium by MTW PHAs would require execution of a new MTW agreement with the new single-ACC consortium entity, which is not allowed under current law.

9. *Other nonsubstantive changes.* In addition to the changes proposed above, HUD would take the opportunity afforded by this proposed rule to make several technical, nonsubstantive, revisions to the part 943 regulations. These proposed amendments do not alter existing regulatory requirements; rather, they are intended to improve the organization and clarity of the regulations. For example, HUD proposes to remove the existing ''question and answer'' format of the section headings, and to renumber the sections comprising part 943.

IV. Specific Issues for Comment

Although HUD invites comment on all aspects of this proposed rule, HUD specifically seeks comment on the following issues. All public comments received on the proposed rule will be considered in the development of the final rule.

1. *Organizational costs for a consortium.* HUD is interested in addressing the costs that PHAs may incur in forming a consortium and ensuring a fair and equitable administrative fee structure for a consortium. For instance, there may be organizational costs associated with negotiating a consortium agreement and consolidating PHA operations, databases, and documents. HUD is seeking comment on whether the proposed rule addresses these costs effectively.

2. *Administrative fees for single- and multiple-ACC consortia.* HUD proposes to calculate administrative fees for a single-ACC consortium using the same criteria that is now used for calculating administrative fees for any other PHA that covers more than one Fair Market Rent (FMR) area. Administrative fees for the single-ACC consortium will be calculated based on the published administrative fee rates covering the FMR area in which the single-ACC consortium has the greatest proportion of its participants on a date in time, as per PIH Information Center data, and the total number of vouchers under lease for the single-ACC consortium as of the first of each month, up to the baseline number of vouchers under the consortium's ACC. However, a consortium may apply to HUD for blended rates, based proportionately on all FMR areas in which program participants are located within the single-ACC consortium instead of only the FMR area where the preponderance of participants are located.

To determine blended rates, HUD considers the published administrative fee rates for all single-ACC consortium FMR areas and all participants under lease in each of the areas on a date in time to calculate weighted averages. If the weighted averages result in higher administrative fee rates for the consortium, then the blended rates will be applied. If the result is lower, then the original administrative fee rates will be used. The blended rates will be based on the published administrative fee rate for each consortium member effective for the year in which the blended rate is requested. Blended rates apply only to the year for which requested. All consortium members are subject to the same proration regardless of a single-ACC consortium's approval for a blended rate. HUD seeks comment on whether use of a blended rate at the onset for calculating administrative fees is a preferable alternative. Also, the proposed rule allows a single-ACC consortium to request higher administrative fees if it operates over a large geographic area. HUD defines ''large geographic area'' as an area covering multiple counties. Is HUD's definition of a large geographic area appropriate?

Administrative fees for a multiple-ACC consortium's Section 8 HCV program will be calculated individually for each consortium member. The administrative fee calculation under a multiple-ACC consortium differs from that under a single-ACC consortium because the multiple-ACC consortium is structured differently than the single-ACC consortium. Under a multiple-ACC consortium each PHA retains its own ACC and program payments are made to the lead agency, on behalf of other consortium members, and then distributed by the lead agency based on the consortium agreement and HUD regulations.

3. *January 1 consortium effective date and consortium fiscal year end.* HUD proposes to restrict the formation of a consortium to January 1 of any given year and to require PHAs forming a single-ACC consortium to adopt a new fiscal year end for the consortium. In addition, PHAs forming a multiple-ACC consortium must all adopt the same fiscal year end. However, HUD recognizes that these requirements may delay or discourage potential consortium formations and invites comment specifically on this issue.

4. *5-year consortium term.* HUD also proposes to require a consortium to exist for 5 years before any withdrawal or dissolution from a consortium can take place, with the possibility for withdrawals or dissolutions prior to

completion of the 5-year term with a showing of good cause. HUD recognizes that this requirement may discourage potential consortium formations, and invites comment specifically on whether the requirement is overly restrictive.

5. *Withdrawals from or additions to a consortium.* The proposed rule provides that the withdrawal from single-ACC and multiple-ACC consortia by member PHAs must take place on the last day of the consortium's fiscal year. In addition, HUD proposes that all additions of PHAs to single-ACC and multiple-ACC consortia must take place on the first day of the consortium's fiscal year. However, HUD recognizes that these requirements may place undue burden on member PHAs and consortia, and invites comment specifically on these requirements.

6. *Voucher and funding distribution in the case of withdrawals from or dissolution of a single-ACC consortium.* The proposed rule specifies how vouchers and funding would be distributed upon withdrawal from or dissolution of a single-ACC consortium. Upon dissolution or withdrawal, consortium members would leave the consortium with at least the same number of authorized baseline units they had under their ACC prior to joining the consortium (that is, the number of baseline units contributed by each member to the consortium upon its formation). HUD would therefore calculate the contract renewal funding allocation based on the number of leased vouchers located within their original jurisdiction at the time of withdrawal or dissolution, up to their original baseline number. HUD may, for good cause, allow for an alternative distribution of baseline units and leased vouchers. Funding is proposed to be distributed as follows: Budget authority for the year would be divided proportionately, based on the percentage of all leased units in the consortium that each consortium member would receive upon dissolution or withdrawal. Administrative fees would be paid to the withdrawing PHA and the remaining consortium per the current appropriations requirements. Net Restricted Assets and Unrestricted Net Assets would be distributed based on the percentage of the initial balance that was contributed by each PHA.

The proposed rule also specifies how new incremental vouchers under a tenant protection action and under a special purpose voucher program would be distributed upon dissolution or withdrawal of a single-ACC consortium. New incremental vouchers under a special purpose voucher program (such as the Family Unification Program, HUD's Veterans Affairs Supportive Housing program, and the Non-elderly Disabled voucher program) would be distributed upon dissolution or withdrawal as specified by consortium members in the consortium agreement, provided that such voucher distribution is made in accordance with program requirements under each respective special purpose voucher. Tenant protection vouchers allocated to cover a public housing demolition, disposition, or conversion action would remain with the PHA that has ownership over the property upon dissolution or withdrawal. Tenant protection vouchers allocated to cover a multifamily housing conversion action would remain with the PHA that has jurisdiction over the converted project upon dissolution or withdrawal. If a converted project has overlapping jurisdictions, the consortium agreement would be required to specify which PHA will have jurisdiction over the converted project and therefore retain administration of the tenant protection vouchers associated with such project upon dissolution or withdrawal.

With this background, HUD seeks comment specifically on whether the method of voucher and funding distribution as proposed in this rule equitably divides vouchers and funding among consortium members upon dissolution or withdrawal. Are there alternate methods of voucher and funding distribution that more equitably divide vouchers and funding when a consortium member withdraws or the single-ACC consortium dissolves? Should PHAs be given more discretion to set terms and conditions on dissolution or withdrawal?

7. *Partial coverage of a program.* In the proposed rule, as in current part 943 of the regulations, a PHA is not authorized to enter a consortium for only part of its eligible program. For example, a PHA may not enter only part of its Section 8 HCV program into a single-ACC consortium or part of its public housing program into a multiple-ACC consortium. This provision is designed to increase administrative efficiencies. Allowing a PHA to enter a consortium for only part of its Section 8 or public housing program would result in as many or more PHA plans and reporting submissions, rather than fewer, and overlapping PHA plans and reports for the same program. On the other hand, allowing a PHA to enter a consortium for only part of its program may allow greater PHA choice in formation of a consortium, and may result in more PHAs choosing to form consortia. HUD invites comments specifically on whether the proposed rule's provision on partial coverage of a program is overly restrictive and whether PHAs will be less inclined to form consortia as a result of this provision.

8. *Single-ACC consortium.* This proposed rule would authorize the formation of a single-ACC consortium for the administration of the Section 8 HCV program. As more fully described above in this preamble, such a consortium would be a single PHA, with a single jurisdiction, for purposes of administering the Section 8 HCV program. HUD anticipates that PHAs that form a single-ACC consortium for the purposes of voucher administration will see increased administrative efficiencies through one set of reporting and audit requirements, consolidated operations, a centralized waiting list, and a single set of policies and procedures. Moreover, HUD believes that families are also better served through the pooling of assets that occurs when forming a single-ACC consortium.

HUD seeks comments from PHAs, tenant organizations, and other interested members of the public on the benefits of, and the potential administrative and statutory barriers to, forming a single-ACC consortium as provided for in this proposed rule. In particular, HUD is interested in comments regarding the following:

(1) Because the state and local law of each participating PHA in a single-ACC consortium must authorize the operation of the HCV program across established jurisdictional boundaries, to what extent would current state and local laws limit a PHA from joining, or allow a PHA to join, a single-ACC consortia? If allowed by current state and local law, to what extent would PHAs use such authority to form single-jurisdiction consortia?

(2) What changes to the proposed regulatory requirements for single-ACC consortia may be needed to make the formation of such consortia a more valuable and attractive option, in terms of cost-reduction benefits, administrative efficiencies, and housing choices for participants?

(3) How should individual PHAs converting into a single-ACC consortium be held accountable for taking corrective action to resolve prior violations of civil rights, environmental, labor, or other requirements?

V. Findings and Certifications

Regulatory Review—Executive Order 13563

Executive Order 13563 (Improving Regulations and Regulatory Review)

directs executive agencies to analyze regulations that are ''outmoded, ineffective, insufficient, or excessively burdensome, and to modify, streamline, expand, or repeal them in accordance with what has been learned.'' Executive Order 13563 also directs that, where relevant, feasible, and consistent with regulatory objectives, and to the extent permitted by law, agencies are to identify and consider regulatory approaches that reduce burdens and maintain flexibility and freedom of choice for the public.

The broader purpose of the reform to HUD's PHA consortia regulations is to create a regulatory environment in which more PHAs are able to form consortia, without undue or unnecessary regulatory burden. This rule proposes to improve the process on how consortia are formed, structured, and dissolved, by increasing administrative efficiencies associated with forming a consortium and facilitating resident choice in locating suitable housing within a region. Today, there are at least 8 formal consortia encompassing a total of 35 PHAs in states including Alabama, Arizona, Ohio, Georgia, Illinois, Kansas, Kentucky, Texas, Oregon, and Washington. Current consortia typically are small PHAs that form consortia in order to spread the administrative costs of interacting with HUD. HUD anticipates that more consortia will form under the proposed regulations, which remove hurdles experienced by PHAs, thus amplifying the benefits of consortia.

Paperwork Reduction Act

The information collection requirements contained in this proposed rule have been approved by the Office of Management and Budget (OMB) under the Paperwork Reduction Act of 1995 (44 U.S.C. 3501–3520) and assigned OMB Control Number 2577–0235. In accordance with the Paperwork Reduction Act, HUD may not conduct or sponsor, and a person is not required to respond to, a collection of information unless the collection displays a currently valid OMB control number.

Regulatory Flexibility Act

The Regulatory Flexibility Act (RFA) (5 U.S.C. 601 *et seq.*) generally requires an agency to conduct a regulatory flexibility analysis of any rule subject to notice and comment rulemaking requirements, unless the agency certifies that the rule will not have a significant economic impact on a substantial number of small entities. This proposed rule will enable PHAs to establish cross-jurisdictional consortia that would be treated as a single PHA, with a single jurisdiction and a single set of reporting and audit requirements, for purposes of administering the HCV program in a more streamlined and less burdensome fashion. The regulatory streamlining provided by this rule should make it easier for PHAs, including small PHAs, to form consortia and achieve greater benefits. Although there may be some costs associated with the formation and operation of consortia, these are expected to be more than offset by the operational flexibilities afforded by the rule. Moreover, the formation of consortia is a voluntary action and, therefore, to the extent that the proposed rule would result in PHAs incurring any costs, it would be as a result of their own discretion. Accordingly, the undersigned certifies that this rule would not have a significant economic impact on a substantial number of small entities.

Notwithstanding HUD's determination that this rule would not have a significant economic impact on a substantial number of small entities, HUD invites comments specifically regarding less burdensome alternatives to this rule that will meet HUD's objectives as described in this preamble.

Environmental Impact

A Finding of No Significant Impact (FONSI) with respect to the environment has been made in accordance with HUD regulations at 24 CFR part 50, which implement section 102(2)(C) of the National Environmental Policy Act of 1969 (42 U.S.C. 4332 *et seq.*). The FONSI is available for public inspection between the hours of 8 a.m. and 5 p.m. weekdays in the Regulations Division, Office of General Counsel, Department of Housing and Urban Development, 451 7th Street, SW., Room 10276 Washington, DC 20410–0500. Due to security measures at the HUD Headquarters building, please schedule an appointment to review the FONSI by calling the Regulations Division at 202–708–3055 (this is not a toll-free number). Individuals with speech or hearing impairments may access this number via TTY by calling the Federal Relay Service at 800–877–8339 (this is a toll-free number).

Federalism

Executive Order 13132 (entitled ''Federalism'') prohibits an agency from publishing any rule that has federalism implications if the rule either imposes substantial direct compliance costs on state and local governments and is not required by statute or the rule preempts state law, unless the agency meets the consultation and funding requirements of section 6 of the Executive order. This rule would not have federalism implications and would not impose substantial direct compliance costs on state and local governments or preempt state law within the meaning of the Executive order.

Unfunded Mandates Reform Act

Title II of the Unfunded Mandates Reform Act of 1995 (2 U.S.C. 1531–1538) (UMRA) establishes requirements for Federal agencies to assess the effects of their regulatory actions on state, local, and tribal governments, and on the private sector. This proposed rule would not impose any Federal mandates on any state, local, or tribal government, or on the private sector, within the meaning of UMRA.

Catalog of Federal Domestic Assistance

The Catalog of Federal Domestic Assistance number for the Housing Choice Voucher Program is 14.871.

Lists of Subjects

24 CFR Part 5

Administrative practice and procedure, Aged, Claims, Crime, Government contracts, Grant programs-housing and community development, Individuals with disabilities, Intergovernmental relations, Loan programs-housing and community development, Low and moderate income housing, Mortgage insurance, Penalties, Pets, Public housing, Rent subsidies, Reporting and recordkeeping requirements, Social security, Unemployment compensation, Wages.

24 CFR Part 943

Public housing, Reporting and recordkeeping requirements.

Accordingly, for the reasons stated in the preamble, HUD proposes to amend 24 CFR parts 5 and 943 as follows:

PART 5—GENERAL HUD PROGRAM REQUIREMENTS; WAIVERS

■ 1. The authority citation for 24 CFR part 5 continues to read as follows:

Authority: 42 U.S.C. 1437a, 1437c, 1437d, 1437f, 1437n, 3535(d), Sec. 327, Pub.L. 109–115, 119 Stat. 2936, and Sec. 607, Pub.L. 109–162, 119 Stat. 3051.

■ 2. Amend § 5.100 by revising the definition of ''Public Housing Agency (PHA)'' to read as follows:

§ 5.100 Definitions.

* * * * *

Public Housing Agency (PHA) means any state, county, municipality, or other governmental entity or public body, or agency or instrumentality of these entities, that is authorized to engage or

assist in the development or operation of low-income housing under the 1937 Act, or a consortium of such entities or bodies as approved by the Secretary.

* * * * *

■ 3. Revise part 943 to read as follows:

PART 943—PUBLIC HOUSING AGENCY CONSORTIA AND JOINT VENTURES

Subpart A—General

Sec.
943.101 Purpose of this part.
943.103 Consortium.
943.105 Joint ventures and other business arrangements.

Subpart B—Single-ACC Consortium

943.201 Programs covered under this subpart.
943.203 Organization of a single-ACC consortium.
943.205 Jurisdiction of a single-ACC consortium.
943.207 Elements of a single-ACC consortium agreement.
943.209 Withdrawals from or additions to a single-ACC consortium.
943.211 Dissolution of a single-ACC consortium.
943.213 Voucher and funding distribution upon dissolution or withdrawal.
943.215 The relationship between HUD and a single-ACC consortium.
943.217 Organizational costs and administrative fees.
943.219 Planning, reporting, and financial accountability.
943.221 Responsibilities of a single-ACC consortium.

Subpart C—Multiple-ACC Consortium

943.301 Programs covered under this subpart.
943.303 Organization of a multiple-ACC consortium.
943.305 Jurisdiction of a multiple-ACC consortium.
943.307 Elements of a multiple-ACC consortium agreement.
943.309 Withdrawals from or additions to a multiple-ACC consortium.
943.311 Dissolution of a multiple-ACC consortium.
943.313 The relationship between HUD and a multiple-ACC consortium.
943.315 Organizational costs and administrative fees.
943.317 Planning, reporting, and financial accountability.
943.319 Responsibilities of member PHAs.

Subpart D—Subsidiaries, Affiliates, Joint Ventures in Public Housing

943.401 Programs and activities covered under this subpart.
943.403 Types of operating organizations for a participating PHA.
943.405 Financial impact of a subsidiary, affiliate, or joint venture on a PHA.
943.407 Financial accountability of a subsidiary, affiliate, or joint venture to HUD and the Federal Government.
943.409 Procurement standards for PHAs selecting partners for a joint venture.
943.411 Procurement standards apply for a PHA's joint venture partner.
943.413 Procurement standards for a joint venture.

Authority: 42 U.S.C. 1437k, and 3535(d).

Subpart A—General

§ 943.101 Purpose of this part.

This part authorizes public housing agencies (PHAs), consistent with state and local law, to form consortia, joint ventures, affiliates, subsidiaries, partnerships, and other business arrangements under section 13 of the United States Housing Act of 1937 (42 U.S.C. 1437k) (1937 Act). This part does not preclude a PHA from entering cooperative arrangements to operate its programs under other authority, as long as they are consistent with other program regulations and requirements.

§ 943.103 Consortium.

(a) *Consortium.* Under the authority of section 13 of the 1937 Act, a PHA participating in a consortium shall enter into a consortium agreement under one of two forms: Single-Annual Contributions Contract (ACC) consortium or multiple-ACC consortium.

(b) *Single-ACC consortium.* A single-ACC consortium consists of two or more PHAs that join together to perform planning, reporting, and other administrative and management functions of the Section 8 Housing Choice Voucher (HCV) program, as specified in a consortium agreement. Under a single-ACC consortium, the consortium becomes a separate legal entity and is considered a single PHA for purposes of the Section 8 HCV program. A single-ACC consortium must operate the Section 8 HCV program in accordance with all applicable program regulations. HUD funds the consortium as one PHA, and applies all reporting and audit requirements accordingly. The requirements for single-ACC consortia are contained in subpart B of this part.

(c) *Multiple-ACC Consortium.* A multiple-ACC consortium consists of two or more PHAs that join together to perform planning, reporting, and other administrative functions for member PHAs, as specified in a consortium agreement. A multiple-ACC consortium submits a joint PHA plan, as applicable, and designates a lead PHA. The lead agency collects the assistance funds from HUD that would be paid to the member PHAs for the elements of their operations that are administered by the consortium and allocates them according to the consortium agreement. The lead agency also maintains the consortium's records and submits reports to HUD. Each member PHA in a multiple-ACC consortium retains its own ACC with HUD. The requirements for a multiple-ACC consortium are contained in subpart C of this part.

§ 943.105 Joint ventures and other business arrangements.

Under section 13 of the 1937 Act, PHAs may form joint ventures, affiliates, subsidiaries, partnerships, and other business arrangements. The requirements for such arrangements are contained in subpart D of this part.

Subpart B—Single-ACC Consortium

§ 943.201 Programs covered under this subpart.

(a) A PHA may enter a single-ACC consortium under this subpart solely for administration of the following programs:

(1) The Section 8 HCV program (including project-based vouchers; project-based certificates; the Family Self-Sufficiency program; and special voucher housing types, including the HCV Homeownership Option);

(2) Mainstream 5 vouchers, except that entities which are only authorized to administer Mainstream 5 vouchers may not join or form single-ACC consortia; and

(3) Grants to consortium members in connection with the Section 8 HCV program, to the extent not inconsistent with the terms of the governing documents for the grant program's funding source.

(b) A PHA that is the owner of units receiving tenant-based rental assistance, or a project receiving project-based rental assistance, under section 8(o) of the 1937 Act, is not precluded from joining a single-ACC consortium, provided that such units or Section 8 projects are administered in accordance with 24 CFR 982.352(b) (for tenant-based vouchers) and 24 CFR 983.59 (for project-based vouchers). A PHA participating in the consortium may not serve as an independent entity for units or projects owned by a PHA within the consortium for purposes of 24 CFR 982.352(b) or 24 CFR 983.59.

(c) Moving-To-Work (MTW) PHAs may not form or join a single-ACC consortium.

(d) The single-ACC consortium must cover the PHA's whole HCV program under the ACC with HUD, including all authorized unit months and all funding.

§ 943.203 Organization of a single-ACC consortium.

(a) A PHA that elects to form a single-ACC consortium may do so upon HUD approval, and in accordance with HUD

established guidelines and instructions. HUD approval of a single-ACC consortium will be based on the following:

(1) That advance written notice of at least 120 days of the intent to form a single-ACC consortium has been given to HUD. HUD may, upon a showing of good cause, provide an exception to this requirement;

(2) That all required documentation has been submitted including:

(i) The Consortium Agreement;

(ii) The 5-Year Plan and the Annual Plan, as applicable, in accordance with 24 CFR part 903 and any other statutory or HUD requirements (See § 943.219, Planning, reporting, and financial accountability);

(iii) A letter of intent signed by the executive director of every PHA wishing to join the single-ACC consortium, with an accompanying board resolution of each PHA;

(iv) Supporting legal opinions satisfactory to HUD that the single-ACC consortium's jurisdiction is consistent with the state and local laws of each consortium member;

(v) Financial documentation for each PHA wishing to join the single-ACC consortium, including a final close-out audit for every PHA joining the single-ACC consortium, up to the effective date of the consortium;

(vi) Certification that no PHA wishing to join the single-ACC consortium fails the civil rights compliance threshold for new funding, or, if applicable, that joining the consortium is consistent with the action(s) to resolve outstanding civil rights matters. HUD will not approve a PHA's conversion into a single-ACC consortium until either:

(A) The PHA wishing to join takes corrective action to the satisfaction of HUD or another entity with authority to enforce a corrective action agreement or order; or

(B) The single-ACC consortium demonstrates to HUD's satisfaction that it has assumed liability for taking the corrective action; and

(vii) Any other form of documentation that HUD deems necessary and appropriate for approval of the single-ACC consortium;

(3) The PHA's performance rating under the Section 8 Management and Assessment Program (SEMAP), and whether there are any open findings from an Office of Inspector General (OIG) audit, HUD Field Office (FO) monitoring review, financial audit, and/or any other HUD or HUD-required review;

(4) That the financial documentation submitted by each PHA in support of single-ACC consortium formation demonstrates that the single-ACC consortium will have the financial capability, as determined by HUD, to administer the programs and activities of the single-ACC consortium;

(5) Any other factors that may indicate appropriateness of single-ACC consortium formation, such as the PHA's capacity to administer its Section 8 HCV program, and the existing market conditions in the jurisdiction of each PHA joining the single-ACC consortium; and

(6) That all other consortium requirements are met.

(b) Upon HUD approval, the single-ACC consortium will become effective as of January 1 of the following year. HUD may, upon showing of good cause, provide an exception to this requirement.

(c) A PHA that elects to form a single-ACC consortium must enter into a consortium agreement, which shall meet the minimum requirements established in § 943.207 (Elements of a single-ACC consortium agreement) of this subpart. The executed consortium agreement must be submitted to HUD, and HUD may require modification to the consortium agreement before approving the formation of the single-ACC consortium.

(d) PHAs joining a single-ACC consortium must adopt a new fiscal year end for the consortium.

(e) The single-ACC consortium must be administered in accordance with the applicable provisions of this part; the consortium agreement; the PHA Plan, as applicable; other applicable HUD regulations and requirements; and state and local law.

§ 943.205 Jurisdiction of a single-ACC consortium.

(a) A single-ACC consortium shall operate in a single consortium-wide jurisdiction composed of the combined jurisdictions of all consortium members. Jurisdictional boundaries between individual consortium members will cease to exist for purposes of HCV program administration during the term of the consortium.

(b) The single-ACC consortium jurisdiction must be consistent with the state and local law of each consortium member.

§ 943.207 Elements of a single-ACC consortium agreement.

(a) The single-ACC consortium agreement governs the formation and operation of the consortium and must specify the following:

(1) The name of each consortium member under the consortium agreement;

(2) The functions to be performed by each consortium member during the term of the consortium;

(3) The structure of the single-ACC consortium, which shall address, at a minimum, the establishment of a board of directors or similar governing body and designated officials;

(4) The process for merging the consortium members' waiting lists upon formation of the single-ACC consortium, including the adoption of waiting list preferences (e.g., homeless) by the single-ACC consortium. This process must not have the purpose or effect of delaying or otherwise denying admission to the program based on race, color, national origin, sex, religion, disability, or familial status of any member of the applicant family;

(5) The terms under which a PHA may join or withdraw from the single-ACC consortium. The consortium agreement shall conform to § 943.209 (Withdrawals from or additions to a single-ACC consortium) of this subpart;

(6) How new incremental vouchers under a special purpose voucher program will be distributed among consortium members upon dissolution or withdrawal from the consortium; and

(7) Which consortium member, upon dissolution or withdrawal, shall have jurisdiction over converted projects with overlapping jurisdictions under a multifamily housing tenant protection action.

(b) The agreement must acknowledge that all consortium members are subject to the single-ACC PHA Plan.

(c) The agreement must be signed by an authorized representative of each consortium member.

§ 943.209 Withdrawals from or additions to a single-ACC consortium.

(a) Withdrawal refers to one or more consortium members leaving the single-ACC consortium without resulting in dissolution of the single-ACC consortium.

(b) Withdrawals from a single-ACC consortium may not occur until the initial 5-year consortium term has expired. HUD may, upon showing of good cause, allow withdrawals from a single-ACC consortium before completion of the initial 5-year term.

(c) If the consortium has any outstanding civil rights matters, withdrawals from a single-ACC consortium may not occur unless the withdrawal is consistent with the action(s) to resolve such matters.

(d) To provide for orderly transition, withdrawal of a PHA must take effect on the last day of the consortium's fiscal year, and addition of a PHA must take effect on the first day of the

consortium's fiscal year. The single-ACC consortium must notify HUD in writing of any additions or withdrawals at least 120 days in advance. This notification must include submission of the withdrawing member's replacement 5-Year Plan and Annual Plan, as applicable, in accordance with 24 CFR part 903 and any other statutory or HUD requirements.

(e) Upon withdrawal from the single-ACC consortium, the withdrawing member must offer to each applicant currently on the single-ACC consortium's waiting list the opportunity to be placed on the withdrawing member's waiting list, with the date and time of their original application to the single-ACC consortium's waiting list. These applicants must not be considered nonresident applicants (for the purposes of restriction of portability under 982.353(c)) if the applicant was a resident applicant at the time of application to the single-ACC consortium's waiting list.

(f) Upon a member's withdrawal from the single-ACC consortium, vouchers and funding, including net restricted assets and unrestricted net assets, will be distributed to the withdrawing member as specified in § 943.213 (Voucher and funding distribution upon dissolution or withdrawal) of this subpart.

§ 943.211 Dissolution of a single-ACC consortium.

(a) A single-ACC consortium may not be dissolved prior to the expiration of the initial 5-year consortium term. HUD may, upon showing of good cause, allow dissolution of a consortium prior to completion of the initial 5-year term. A single-ACC consortium will continue to exist beyond the initial 5-year consortium term, unless dissolved.

(b) If the consortium has any outstanding civil rights matters, dissolution of a single-ACC consortium may not occur unless the dissolution is consistent with the action(s) to resolve such matters.

(c) To provide for orderly transition, dissolution of the single-ACC consortium must take effect on the last day of the consortium's fiscal year. The single-ACC consortium must notify HUD in writing of dissolution at least 120 days in advance of the dissolution effective date. This notification must include submission of all members' replacement 5-Year Plans and Annual Plans, as applicable, in accordance with 24 CFR part 903 and any other statutory or HUD requirements.

(d) Upon dissolution, all withdrawing members must offer to each applicant currently on the single-ACC consortium's waiting list the opportunity to be placed on all of the withdrawing members' waiting lists, with the date and time of their original application to the single-ACC consortium's waiting list. These applicants must not be considered nonresident applicants (for the purposes of restriction of portability under § 982.353(c)) if the applicant was a resident applicant at the time of application to the single-ACC consortium's waiting list.

(e) Upon dissolution, vouchers and funding, including net restricted assets and unrestricted net assets, will be distributed among consortium members as specified in § 943.213 (Voucher and funding distribution upon dissolution or withdrawal) of this subpart.

§ 943.213 Voucher and funding distribution upon dissolution or withdrawal.

(a) Vouchers will be distributed in the following manner upon dissolution or withdrawal:

(1) Each consortium member will leave the consortium upon dissolution or withdrawal with at least the same number of authorized baseline units that the consortium member brought into the consortium at the time of its formation. HUD may, for good cause, allow for an alternative distribution of baseline units.

(2) Each consortium member shall receive contract renewal funding allocations based on the number of leased vouchers located within their original jurisdiction at the time of withdrawal or dissolution, up to their original baseline number. HUD may, for good cause, allow for an alternative distribution of leased vouchers.

(3) Tenant protection vouchers allocated to cover a public housing demolition, disposition, or conversion action will remain with the PHA that has ownership over the property. Tenant protection vouchers allocated to cover a multifamily housing conversion action shall remain with the PHA that has jurisdiction over the converted project. Administration of tenant protection vouchers under converted projects with overlapping jurisdictions shall remain with the PHA that has jurisdiction over the converted project as specified in the consortium agreement.

(4) New incremental vouchers under a special purpose voucher program will be distributed as specified in the consortium agreement, provided that such voucher distribution is made in accordance with program requirements under each respective special purpose voucher program.

(b) Funding will be distributed in the following manner upon dissolution or withdrawal:

(1) Budget authority will be divided proportionately, based on the percentage of all leased units in the consortium that each consortium member will receive.

(2) Administrative fees will be paid to the withdrawing PHA and the remaining consortium per the current appropriations requirements.

(3) Net Restricted Assets and Unrestricted Net Assets will be distributed based upon the percentage of the initial balance that was contributed by each consortium member.

§ 943.215 The relationship between HUD and a single-ACC consortium.

(a) HUD has a direct relationship with the single-ACC consortium, the same as it would have with any other PHA. Program funds will be disbursed to the single-ACC consortium in accordance with the consortium's ACC. Funding must be used in accordance with the consortium agreement, the PHA Plan, and HUD regulations and requirements.

(b) HUD may take any of the remedies described in the ACC against an individual member in a single-ACC consortium, or against the single-ACC consortium as a whole, if it determines that either has substantially violated—or is improperly administering—the requirements of the HCV program.

§ 943.217 Organizational costs and administrative fees.

(a) The administrative fee for a single-ACC consortium will be determined based on the published administrative fee rates for the area in which the single-ACC consortium has the greatest proportion of its participants on a date in time and the total number of vouchers under lease for the single-ACC consortium as of the first of the month, up to the baseline number of vouchers under the single-ACC consortium's ACC.

(b) A single-ACC consortium may apply to HUD for blended rates, which are determined based on a weighted average of the published administrative fee rates for all areas in which program participants are located within the single-ACC consortium and all participants under lease in each of the areas on a date in time. The blended rates will be based on the published administrative fee rate for each consortium member, effective for the year for which the blended rate is requested. Blended rates will only be applied if they result in a higher administrative fee rate for the single-

ACC consortium. Blended rates apply only to the year for which requested.

(c) If appropriations are available, a single-ACC consortium may be eligible for a higher administrative fee in accordance with 24 CFR 982.152(b)(2) if it operates over a large geographic area.

(d) If appropriations are available, a single-ACC consortium may be eligible for administrative fees to cover extraordinary costs determined necessary by HUD, in accordance with 24 CFR 982.152(a)(1)(iii)(C), during the initial year of operation of the consortium to provide for the organization and implementation of the single-ACC consortium.

§ 943.219 Planning, reporting, and financial accountability.

(a) A single-ACC consortium is considered one PHA for purposes of Section 8 HCV program administration, including but not limited to, program accounts and records, audit requirements, and all PHA responsibilities under the ACC, the PHA administrative plan, and HUD regulations and other requirements.

(b) Planning, reporting, and financial accountability apply to a single-ACC consortium as follows:

(1) Upon creation of the single-ACC consortium, each member's assets, liabilities, and equity accounts, as related to the HCV program, are consolidated and reported on a consolidated balance sheet for purposes of single reporting in the Financial Assessment Subsystem for Public Housing Agencies (FASS–PH) and the Voucher Management System (VMS).

(2) Prior to entering a single-ACC consortium, each PHA must agree to the completion of a final audit to close-out program accounts for all HCV programs, up to the effective date of the consortium. The final audit must be completed in accordance with 24 CFR 982.159. Once the audit is completed, remaining funds from all the PHAs' accounts must be transferred to the consortium.

(3) During the term of the consortium agreement, the single-ACC consortium must submit a 5-Year Plan and Annual Plan, as applicable, for the consortium, in accordance with 24 CFR part 903 and any other statutory or HUD requirements. For any programs not covered by the single-ACC consortium (e.g., a consortium member administers a public housing program separately from the single-ACC consortium), consortium members must submit a separate 5-Year Plan and Annual Plan to HUD for those programs, as applicable, in accordance with 24 CFR part 903 and any other statutory or HUD requirements.

(4) During the term of the consortium agreement, the single-ACC consortium must have a single Section 8 HCV administrative plan for the consortium, in accordance with 24 CFR 982.54 (Administrative plan).

(5) The single-ACC consortium must maintain records and submit reports to HUD as a single PHA for purposes of Section 8 HCV program administration, in accordance with HUD regulations and requirements that account for all activities of the consortium. All consortium members will be bound by the 5-Year and Annual Plans and reports submitted to HUD by the single-ACC consortium for programs covered by the consortium.

(6) Financial accountability rests with the single-ACC consortium and, thus, HUD will apply independent audit and performance assessment requirements on a consortium-wide basis.

(7) A single-ACC consortium must keep a copy of the consortium agreement on file for inspection. The consortium agreement must also be a supporting statement to the PHA plan.

§ 943.221 Responsibilities of a single-ACC consortium.

Each consortium member is responsible for the performance of the consortium and has an obligation to assure that all program funds are used in accordance with HUD regulations and requirements, and that the programs under the consortium are administered in accordance with HUD regulations and requirements. Any breach of program requirements is a breach of the consortium ACC, so each consortium member is responsible for the performance of the consortium as a whole.

Subpart C—Multiple-ACC Consortium

§ 943.301 Programs covered under this subpart.

(a) PHAs may enter a multiple-ACC consortium under this subpart for administration of:

(1) The public housing program;

(2) The Section 8 HCV (including project-based vouchers; project-based certificates; the Family Self-Sufficiency program; and special voucher housing types, including the HCV Homeownership Option);

(3) The Section 8 Moderate Rehabilitation program, including the Single Room Occupancy program; and

(4) Grants to consortium members in connection with Section 8 and public housing programs, to the extent not inconsistent with the terms of the governing documents for the grant program's funding source.

(b) A PHA that is the owner of units receiving tenant-based rental assistance, or a project receiving project-based rental assistance, under section 8(o) of the 1937 Act, is not precluded from joining a multiple-ACC consortium, provided that such units or Section 8 projects are administered in accordance with 24 CFR 982.352(b) (for tenant-based vouchers) and 24 CFR 983.59 (for project-based vouchers). A PHA participating in the consortium may not serve as an independent entity for units or projects owned by PHAs within the consortium for purposes of 24 CFR 982.352(b) or 24 CFR 983.59.

(c) MTW agencies may not form or join a multiple-ACC consortium.

(d) If a PHA elects to enter a multiple-ACC consortium with respect to a category specified in paragraph (a) of this section, the consortium must cover the PHA's whole program under the ACC with HUD for that category, including all dwelling units and all funding.

§ 943.303 Organization of a multiple-ACC consortium.

(a) A PHA that elects to form a multiple-ACC consortium may do so upon HUD approval, and in accordance with HUD established guidelines and instructions. HUD approval of a multiple-ACC consortium will be based on the following:

(1) That written notice of the intent to form a multiple-ACC consortium has been given to HUD at least 20 days in advance. HUD may, upon a showing of good cause, provide an exception to this requirement;

(2) That all required documentation has been submitted including:

(i) The Consortium Agreement;

(ii) The 5-Year Plan and the Annual Plan, as applicable, in accordance with 24 CFR part 903 and any other statutory or HUD requirements (see § 943.317, Planning, reporting, and financial accountability);

(iii) A letter of intent signed by the executive director of every PHA wishing to join the multiple-ACC consortium, with the accompanying board resolution of each PHA;

(iv) Any memoranda of understanding (MOUs) and/or other agreements to operate within the jurisdiction of other consortium members, including supporting legal opinions, satisfactory to HUD, that such agreements are in compliance with the applicable state and local laws of each consortium member;

(v) Financial documentation for each PHA wishing to join the multiple-ACC

consortium, including a final close-out audit for every PHA joining the multiple-ACC consortium, up to the effective date of the consortium; and

(vi) Any other form of documentation that HUD deems necessary and appropriate for approval of the multiple-ACC consortium;

(3) That the lead agency is not designated as a ''troubled PHA'' by HUD under the Public Housing Assessment System (PHAS) or by the PHA's performance rating under Section 8 Management Assessment Program (SEMAP), and whether there are any open findings from an OIG audit, HUD FO monitoring review, financial audit, or any other HUD or HUD-required review;

(4) That the financial documentation submitted by each PHA in support of multiple-ACC consortium formation demonstrates that the multiple-ACC consortium will have the financial capability to administer the programs and activities of the multiple-ACC consortium;

(5) Any other factors that may indicate the appropriateness of a multiple-ACC consortium formation, such as the PHA's capacity to administer its programs, and the existing market conditions in the jurisdiction of each PHA joining the multiple-ACC consortium; and

(6) That all other consortium requirements are met.

(b) Upon HUD approval, the multiple-ACC consortium will become effective as of January 1 of the following year. HUD may, upon showing of good cause, provide an exception to this requirement.

(c) A PHA that elects to form a multiple-ACC consortium must enter into a consortium agreement among the member PHAs, specifying a lead agency (see § 943.307, Elements of a multiple-ACC consortium agreement). The executed consortium agreement must be submitted to HUD, and HUD may require modification to the consortium agreement before approving the formation of the multiple-ACC consortium. HUD enters into any necessary payment agreements with the lead agency and the other member PHAs (see § 943.313, The relationship between HUD and a multiple-ACC consortium) to provide that HUD funding to the member PHAs for program categories covered by the consortium will be paid to the lead agency.

(d) The lead agency must not be:

(i) Designated as a ''troubled PHA'' by HUD under PHAS or by the PHA's performance rating under SEMAP, or

(ii) Determined by HUD to fail the civil rights compliance threshold for new funding, or an agency that has had a PHAS designation withheld for civil rights or other reasons.

(e) The lead agency is designated to receive HUD program payments on behalf of member PHAs, to administer HUD requirements for administration of the funds, and to apply the funds in accordance with the consortium agreement and HUD regulations and requirements.

(f) The multiple-ACC consortium must submit a joint PHA Plan, as applicable, to HUD (see § 943.317, Planning, reporting, and financial accountability).

(g) The member PHAs must adopt the same fiscal year end so that the applicable periods for submission and review of the joint PHA plan, reporting, and audits are the same.

(h) The multiple-ACC consortium must be administered in accordance with the applicable provisions of this part, the consortium agreement, the joint PHA Plan, as applicable, and other applicable HUD regulations and requirements.

§ 943.305 Jurisdiction of a multiple-ACC consortium.

Each member PHA has its own jurisdiction, and will continue to operate in that jurisdiction. However, member PHAs may enter into memoranda of understanding (MOUs) and/or other agreements, in accordance with applicable state law, to operate within the jurisdictions of other member PHAs in order to further the goals of the consortium and to expand housing opportunities for assisted families.

§ 943.307 Elements of a multiple-ACC consortium agreement.

(a) The multiple-ACC consortium agreement governs the formation and operation of the consortium. The consortium agreement must be consistent with any payment agreements between the member PHAs and HUD and must specify the following:

(1) The names of the member PHAs and the program categories each PHA is including under the consortium agreement;

(2) The name of the lead agency;

(3) The functions to be performed by the lead agency and the other member PHAs during the term of the consortium;

(4) The allocation of funds among member PHAs, including funding awards made following formation of the multiple-ACC consortium, and responsibility for administration of funds paid to the consortium;

(5) The structure of the multiple-ACC consortium; and

(6) The terms under which a PHA may join or withdraw from the multiple-ACC consortium. The consortium agreement shall conform to § 943.309 (Withdrawals from or additions to a multiple-ACC consortium) of this subpart.

(b) The agreement must acknowledge that the member PHAs are subject to the joint PHA Plan submitted by the lead agency.

(c) The agreement must be signed by an authorized representative of each member PHA.

§ 943.309 Withdrawals from or additions to a multiple-ACC consortium.

(a) Withdrawal refers to one or more consortium member leaving the multiple-ACC consortium without resulting in dissolution of the multiple-ACC consortium.

(b) Withdrawals from a multiple-ACC consortium may not occur until the initial 5-year consortium term has expired. HUD may, upon showing of good cause, allow withdrawals from a multiple-ACC consortium before completion of the initial 5-year term.

(c) If the consortium has any outstanding civil rights matters, withdrawals from a multiple-ACC consortium may not occur unless the withdrawal is consistent with the action(s) to resolve such matters.

(d) To provide for orderly transition, withdrawal of a PHA must take effect on the last day of the consortium's fiscal year, and addition of a PHA must take effect on the first day of the consortium's fiscal year. The multiple-ACC consortium must notify HUD, in writing, of any additions or withdrawals at least 120 days in advance. This notification must include submission of the withdrawing member PHA's replacement 5-Year Plan and Annual Plan, as applicable, in accordance with 24 CFR part 903 and any other statutory or HUD requirements.

(e) Because each member PHA retains its own ACC with HUD, upon withdrawal from the multiple-ACC consortium, the withdrawing PHA begins to operate in accordance with its own ACC with HUD.

§ 943.311 Dissolution of a multiple-ACC consortium.

(a) A multiple-ACC consortium may not be dissolved prior to the expiration of the initial 5-year consortium term. HUD may, upon showing of good cause, allow dissolution of a consortium prior to completion of the initial 5-year term. A multiple-ACC consortium will continue to exist beyond the initial 5-year consortium term, unless dissolved.

(b) If the consortium has any outstanding civil rights matters,

dissolution of a multiple-ACC consortium may not occur unless the dissolution is consistent with the action(s) to resolve such matters.

(c) Dissolution of the multiple-ACC consortium must take effect on the last day of the consortium's fiscal year. The multiple-ACC consortium must notify HUD of the dissolution, in writing, at least 120 days in advance. This notification must include submission of all member PHA's replacement 5-Year Plans and Annual Plans, as applicable, in accordance with 24 CFR part 903 and any other statutory or HUD requirements.

(d) Because each member PHA retains its own ACC with HUD, upon dissolution of the consortium, each member PHA begins to operate as it did prior to the formation of the consortium.

§ 943.313 The relationship between HUD and a multiple-ACC consortium.

(a) HUD has a direct relationship with the consortium through the joint PHA Plan, as applicable, and through one or more payment agreements, executed in a form prescribed by HUD, under which HUD and the member PHAs agree that program funds will be paid to the lead agency on behalf of the member PHAs. Such funds must be used in accordance with the consortium agreement, the joint PHA Plan, and HUD regulations and requirements.

(b) HUD may take any of the remedies described in the ACC against an individual member in a multiple-ACC consortium or against the multiple-ACC consortium as a whole, if it determines that either has substantially violated—or is improperly administering—the requirements of any of its programs.

§ 943.315 Organizational costs and administrative fees.

(a) The administrative fee for the Section 8 HCV program for each member PHA in a multiple-ACC consortium will be based on the published administrative fee for each member PHA prior to formation of the consortium.

(b) If appropriations are available, a multiple-ACC consortium may be eligible, during the first year of operation of the consortium, for administrative fees to cover extraordinary costs determined necessary by HUD in accordance with 24 CFR 982.152(a)(1)(iii)(C) for the organization and implementation of the multiple-ACC consortium.

§ 943.317 Planning, reporting, and financial accountability.

(a) During the term of the consortium agreement, the consortium must submit joint 5-Year Plans and joint Annual Plans, as applicable, for all member PHAs, in accordance with 24 CFR part 903 and any other statutory or HUD requirements. For any programs not covered by the multiple-ACC consortium (e.g., a member PHA administers a public housing or Section 8 HCV program separately from the multiple-ACC consortium), member PHAs must submit a separate 5-Year Plan and Annual Plan to HUD for those programs, as applicable, in accordance with 24 CFR part 903 and any other statutory or HUD requirements.

(b) The lead agency must maintain records and submit reports to HUD, in accordance with HUD regulations and requirements, for all of the member PHAs. All PHAs will be bound by the 5-Year and Annual Plans and reports submitted to HUD by the multiple-ACC consortium for programs covered by the consortium.

(c) Each member PHA must keep a copy of the consortium agreement on file for inspection. The consortium agreement must also be a supporting document to the joint PHA Plan.

(d) Prior to entering a multiple-ACC consortium, each PHA must agree to the completion of a final audit to close-out program accounts for all programs covered by the multiple-ACC consortium, up to the effective date of the consortium.

(e) Independent audits and performance assessment requirements will be applied in the following way:

(1) Where the lead agency will manage substantially all programs and activities of the consortium, HUD interprets financial accountability to rest with the consortium and, thus, HUD will apply independent audit and performance assessment requirements on a consortium-wide basis.

(2) Where the lead agency will not manage substantially all programs and activities of a consortium, the consortium shall indicate in its PHA Plan submission which PHAs have financial accountability for the programs. The determination of financial accountability shall be made in accordance with generally accepted accounting principles, as determined in consultation with an independent public accountant. In such situations, HUD will apply independent audit and performance assessment requirements consistent with that determination. With respect to any consortium, however, HUD may determine (based on a request from the multiple-ACC consortium or other circumstances) to apply independent audit and performance requirements on a different basis where this would promote sound management.

§ 943.319 Responsibilities of member PHAs.

Despite participation in a consortium, each member PHA remains responsible for its own obligations under its ACC with HUD. This means that each member PHA has an obligation to assure that all program funds, including funds paid to the lead agency for administration by the consortium, are used in accordance with HUD regulations and requirements, and that the PHA's program is administered in accordance with HUD regulations and requirements. Any breach of program requirements with respect to a program covered by the consortium agreement is a breach of the ACC with each of the member PHAs, so each PHA is responsible for the performance of the consortium.

Subpart D—Subsidiaries, Affiliates, Joint Ventures in Public Housing

§ 943.401 Programs and activities covered under this subpart.

(a) This subpart applies to the provision of a PHA's public housing administrative and management functions, and to the provision (or arranging for the provision) of supportive and social services in connection with public housing. This subpart does not apply to activities of a PHA that are subject to the requirements of 24 CFR part 905, subpart F.

(b) For purposes of this subpart, the term ''joint venture partner'' means a member (other than a PHA) in a joint venture, partnership, or other business arrangement or contract for services with a PHA.

(c) This part does not affect a PHA's authority to use joint ventures, as may be permitted under state law, when using funds that are not 1937 Act funds.

§ 943.403 Types of operating organizations for a participating PHA.

(a) A PHA may create and operate a wholly owned or controlled subsidiary or other affiliate; and may enter into joint ventures, partnerships, or other business arrangements with individuals, organizations, entities, or governmental units. A subsidiary or affiliate may be a nonprofit corporation. A subsidiary or affiliate may be an organization controlled by the same persons who serve on the governing board of the PHA or who are employees of the PHA.

(b) The purpose of any of these operating organizations would be to administer programs of the PHA.

§ 943.405 Financial impact of a subsidiary, affiliate, or joint venture on a PHA.

Income generated by subsidiaries, affiliates, or joint ventures formed under

the authority of this subpart is to be used for low-income housing or to benefit the residents assisted by the PHA. This income will not cause a decrease in funding provided under the public housing program, except as otherwise provided under the Operating Fund and Capital Fund formulas.

§ 943.407 Financial accountability of a subsidiary, affiliate, or joint venture to HUD and the Federal Government.

The subsidiary, affiliate, or joint venture is subject to the same authority of HUD, HUD's Inspector General, and the Comptroller General to audit its conduct.

§ 943.409 Procurement standards for PHAs selecting partners for a joint venture.

(a) The requirements of 24 CFR part 85 are applicable to this part, subject to paragraph (b) of this section, in connection with the PHA's public housing program.

(b) A PHA may use competitive proposal procedures for qualifications-based procurement (Request for Qualifications), or may solicit a proposal from only one source (''sole source'') to select a joint venture partner to perform an administrative or management function of its public housing program or to provide, or arrange to provide, supportive or social services covered under this part, under the following circumstances:

(1) The proposed joint venture partner has under its control and will make available to the partnership substantial, unique, and tangible resources or other benefits that would not otherwise be available to the PHA on the open market (e.g., planning expertise, program experience, or financial or other resources). In this case, the PHA must maintain documentation to substantiate both the cost reasonableness of its selection of the proposed partner and the unique qualifications of the partner; or

(2) A resident group or a PHA subsidiary is willing and able to act as the PHA's partner in performing administrative and management functions or to provide supportive or social services. This entity must comply with the requirements of 24 CFR part 84 (if the entity is a nonprofit) or 24 CFR part 85 (if the entity is a state or local government) with respect to its selection of the members of the team, and the members must be paid on a cost-reimbursement basis only. The PHA must maintain documentation that indicates both the cost reasonableness of its selection of a resident group or PHA subsidiary and the ability of that group or subsidiary to act as the PHA's partner under this provision.

§ 943.411 Procurement standards apply for a PHA's joint venture partner.

(a) *General.* A joint venture partner is not a grantee or subgrantee and, accordingly, is not required to comply with 24 CFR part 84 or 24 CFR part 85 in its procurement of goods and services under this part. The partner must comply with all applicable state and local procurement and conflict of interest requirements with respect to its selection of entities to assist in PHA program administration.

(b) *Exception.* If the joint venture partner is a subsidiary, affiliate, instrumentality, or identity of interest party of the PHA, it is subject to the requirements of 24 CFR part 85. HUD may, on a case-by-case basis, exempt such a joint venture partner from the need to comply with requirements under 24 CFR part 85 if HUD determines that the joint venture has developed an acceptable alternative procurement plan.

(c) *Contracting with identity-of-interest parties.* A joint venture partner may contract with an identity-of-interest party for goods or services, or a party specified in the selected bidder's response to a Request for Proposal or Request for Qualifications (as applicable), without the need for further procurement if:

(1) The PHA can demonstrate that its original competitive selection of the partner clearly anticipated the later provision of such goods or services;

(2) Compensation of all identity-of-interest parties is structured to ensure there is no duplication of profit or expenses; and

(3) The PHA can demonstrate that its selection is reasonable based upon prevailing market costs and standards, and that the quality and timeliness of the goods or services is comparable to that available in the open market. For purposes of this paragraph (c), an ''identity-of-interest party'' means a party that is wholly owned or controlled by, or that is otherwise affiliated with, the partner or the PHA. The PHA may use an independent organization experienced in cost valuation to determine the cost reasonableness of the proposed contracts.

§ 943.413 Procurement standards for a joint venture.

(a) When the joint venture as a whole is controlled by the PHA or an identity-of-interest party of the PHA, the joint venture is subject to the requirements of 24 CFR part 85.

(b) If a joint venture is not controlled by the PHA or an identity-of-interest party of the PHA, then the rules that apply to the other partners apply. (See § 943.411, Procurement standards apply for a PHA's joint venture partner).

Dated: June 9, 2014.

Sandra B. Henriquez,

Assistant Secretary for Public and Indian Housing.

[FR Doc. 2014–16151 Filed 7–10–14; 8:45 am]

BILLING CODE 4210–67–P

DEPARTMENT OF THE TREASURY

Internal Revenue Service

26 CFR Part 1

[REG–209459–78]

RIN 1545–BL98

Individual Retirement Plans and Simplified Employee Pensions; Partial Withdrawal

AGENCY: Internal Revenue Service (IRS), Treasury.

ACTION: Partial withdrawal of notice of proposed rulemaking.

SUMMARY: This document withdraws part of a notice of proposed rulemaking that specifically relates to rollovers from individual retirement arrangements (IRAs). The partial withdrawal of the proposed regulation will affect individuals who maintain IRAs and financial institutions that are trustees, custodians, or issuers of IRAs.

DATES: As of July 11, 2014, the proposed amendment to § 1.408–4(b)(4)(ii), published Tuesday, July 14, 1981 (46 FR 36198), is withdrawn.

FOR FURTHER INFORMATION CONTACT: Vernon S. Carter at (202) 317–6700 (not a toll-free number).

SUPPLEMENTARY INFORMATION:

Background

Section 408(d) governs distributions from IRAs. Generally, section 408(d)(1) provides that any amount distributed from an IRA is includible in gross income by the payee or distributee. Section 408(d)(3)(A)(i) allows a payee or distributee of an IRA distribution to exclude from gross income any amount paid or distributed from an IRA that is subsequently paid into an IRA not later than the 60th day after the day on which the payee or distributee receives the distribution. Section 408(d)(3)(A)(i) and (d)(3)(D)(i). Section 408(d)(3)(B) provides that an individual is permitted to make only one nontaxable rollover described in section 408(d)(3)(A)(i) in any 1-year period.

On July 14, 1981, the **Federal Register** published proposed regulations (46 FR

36198) that would have amended § 1.408–4 of the Income Tax Regulations by adding a new paragraph (b)(4)(ii). Those proposed regulations provide that the rollover limitation of section 408(d)(3)(B) is applied on an IRA-by-IRA basis. This rule is reflected in IRS Publication 590, Individual Retirement Arrangements (IRAs). However, section 408(d)(3)(B) provides that the exclusion from gross income for IRA rollovers pursuant to subparagraph (A)(i) does not apply ''if at any time during the 1-year period ending on the day of such receipt such individual received any other amount described in that subparagraph from an individual retirement account or an individual retirement annuity which was not includible in his gross income because of the application of this paragraph.''

Based on the language in section 408(d)(3)(B), a recent Tax Court opinion, *Bobrow* v. *Commissioner,* T.C. Memo. 2014–21, held that the limitation applies on an aggregate basis. Thus, under *Bobrow,* an individual cannot make an IRA-to-IRA rollover if the individual has made an IRA-to-IRA rollover involving any of the individual's IRAs in the preceding 1-year period. The IRS intends to follow the opinion in *Bobrow* and, accordingly, is withdrawing paragraph (b)(4)(ii) of § 1.408–4 of the proposed regulations and will revise Publication 590. This interpretation of the rollover rules under section 408(d)(1)(B) does not affect the ability of an IRA owner to transfer funds from one IRA trustee or custodian directly to another, because such a transfer is not a rollover and, therefore, is not subject to the one-rollover-per-year limitation of section 408(d)(3)(B). See Rev. Rul. 78–406, 1978–2 C.B. 157.

In response to comments expressing concern over implementation of the rollover limitation as interpreted in *Bobrow,* the IRS released Announcement 2014–15, 2014–16 I.R.B. 973, on March 20, 2014. Announcement 2014–15 addresses the application to Individual Retirement Accounts and Individual Retirement Annuities of the one-rollover-per-year limitation of section 408(d)(3)(B) and provides transition relief for owners. Consistent with that Announcement, the IRS will not apply the *Bobrow* interpretation of section 408(d)(3)(B) to any rollover that involves a distribution occurring before January 1, 2015.

List of Subjects in 26 CFR Part 1

Treatment of distributions from individual retirement arrangements.

Partial Withdrawal of Proposed Rulemaking

For the reasons stated in the preamble and under the authority of 26 U.S.C. 7805, the Internal Revenue Service withdraws the proposed amendment to § 1.408–4(b)(4)(ii).

John Dalrymple,

Deputy Commissioner for Services and Enforcement.

[FR Doc. 2014–16281 Filed 7–10–14; 8:45 am]

BILLING CODE 4830–01–P

DEPARTMENT OF HOMELAND SECURITY

Coast Guard

33 CFR Part 100

[Docket Number USCG–2014–0407]

RIN 1625–AA08

Special Local Regulation; Great Race On The Sea, Powerboat Race, Atlantic Ocean, Long Beach, NY

AGENCY: Coast Guard, DHS.

ACTION: Notice of proposed rulemaking.

SUMMARY: The Coast Guard is proposing a temporary special local regulation on the navigable waters of the Atlantic Ocean off Long Beach, NY during the Great Race On The Sea Powerboat Race. This action is necessary to provide for the safety of life of participants and spectators during this event. Entering into, transiting through, remaining, anchoring or mooring within these regulated areas would be prohibited unless authorized by the Captain of the Port (COTP) Sector Long Island Sound.

DATES: Comments and related material must be received by the Coast Guard on or before August 11, 2014.

Requests for public meetings must be received by the Coast Guard on or before July 18, 2014.

ADDRESSES: You may submit comments identified by docket number using any one of the following methods:

(1) *Federal eRulemaking Portal: http://www.regulations.gov* .

(2) *Fax:* 202–493–2251.

(3) *Mail or Delivery:* Docket Management Facility (M–30), U.S. Department of Transportation, West Building Ground Floor, Room W12–140, 1200 New Jersey Avenue SE., Washington, DC 20590–0001. Deliveries accepted between 9 a.m. and 5 p.m., Monday through Friday, except federal holidays. The telephone number is 202–366–9329.

See the ''Public Participation and Request for Comments'' portion of the **SUPPLEMENTARY INFORMATION** section below for further instructions on submitting comments. To avoid duplication, please use only one of these three methods.

FOR FURTHER INFORMATION CONTACT: If you have questions on this rule, call or email Petty Officer Scott Baumgartner, Prevention Department, Coast Guard Sector Long Island Sound, (203) 468–4559, *Scott.A.Baumgartner@uscg.mil.* If you have questions on viewing or submitting material to the docket, call Cheryl Collins, Program Manager, Docket Operations, telephone (202) 366–9826.

SUPPLEMENTARY INFORMATION:

Table of Acronyms

COTP Captain of the Port
DHS Department of Homeland Security
FR Federal Register
NPRM Notice of Proposed Rulemaking

A. Public Participation and Request for Comments

We encourage you to participate in this rulemaking by submitting comments and related materials. All comments received will be posted without change to *http://www.regulations.gov* and will include any personal information you have provided.

1. Submitting Comments

If you submit a comment, please include the docket number for this rulemaking, indicate the specific section of this document to which each comment applies, and provide a reason for each suggestion or recommendation. You may submit your comments and material online at *http://www.regulations.gov*, or by fax, mail, or hand delivery, but please use only one of these means. If you submit a comment online, it will be considered received by the Coast Guard when you successfully transmit the comment. If you fax, hand deliver, or mail your comment, it will be considered as having been received by the Coast Guard when it is received at the Docket Management Facility. We recommend that you include your name and a mailing address, an email address, or a telephone number in the body of your document so that we can contact you if we have questions regarding your submission.

To submit your comment online, go to *http://www.regulations.gov*, type the docket number [USCG–2014–0407] in the ''SEARCH'' box and click ''SEARCH.'' Click on ''Submit a Comment'' on the line associated with this rulemaking.

If you submit your comments by mail or hand delivery, submit them in an unbound format, no larger than 8½ by 11 inches, suitable for copying and electronic filing. If you submit comments by mail and would like to know that they reached the Facility, please enclose a stamped, self-addressed postcard or envelope. We will consider all comments and material received during the comment period and may change the rule based on your comments.

2. Viewing Comments and Documents

To view comments, as well as documents mentioned in this preamble as being available in the docket, go to *http://www.regulations.gov*, type the docket number (USCG–2014–0407) in the ''SEARCH'' box and click ''SEARCH.'' Click on Open Docket Folder on the line associated with this rulemaking. You may also visit the Docket Management Facility in Room W12–140 on the ground floor of the Department of Transportation West Building, 1200 New Jersey Avenue SE., Washington, DC 20590, between 9 a.m. and 5 p.m., Monday through Friday, except Federal holidays.

3. Privacy Act

Anyone can search the electronic form of comments received into any of our dockets by the name of the individual submitting the comment (or signing the comment, if submitted on behalf of an association, business, labor union, etc.). You may review a Privacy Act notice regarding our public dockets in the January 17, 2008, issue of the **Federal Register** (73 FR 3316).

4. Public meeting

We do not plan to hold a public meeting. But you may submit a request for one, using one of the methods specified under **ADDRESSES** on or before July 18, 2014. Please explain why you believe a public meeting would be beneficial. If we determine that one would aid this rulemaking, we will hold one at a time and place announced by a later notice in the **Federal Register**.

B. Regulatory History and Information

In 2013, the Event Sponsor, Great South Bay Racing Inc. sponsored a similar powerboat racing event that was held in the same location, with the same race course, in the same timeframe but with a different event name, ''Long Beach Regatta''. The Coast Guard issued a temporary final rule entitled, ''Special Local Regulations: Long Beach Regatta, Powerboat Race, Atlantic Ocean, Long Beach, NY'' that was effective on August 25, 2013 for this event.

C. Basis and Purpose

The legal basis for this proposed rule is 33 U.S.C. 1233 and Department of Homeland Security Delegation No. 0170.1, which collectively authorize the Coast Guard to define regulatory special local regulations. This rule would establish a special local regulation in order to provide for the safety of life on navigable waters during the Great Race On The Sea Powerboat Race.

D. Discussion of Proposed Rule

Great South Bay Racing Inc. is sponsoring the Great Race On The Sea Powerboat Race, an offshore powerboat race, located on the Atlantic Ocean off Long Beach, NY. The event will span two days with race trials and practice runs conducted on Saturday, August 23, 2014 from 8:30 a.m. until 3:30 p.m., and the actual races conducted on Sunday, August 24, 2014 from 8:30 a.m. until 6:30 p.m. The event will feature six classes of offshore powerboats including vessels from the Extreme Class which can reach speeds up to 150 miles per hour during the race. The sponsor expects a minimum of 5,000 spectators for this event with a portion of them expected to view the event from recreational vessels.

The COTP Sector Long Island Sound has determined the combination of increased numbers of recreational vessels in close proximity to this event and registered event participants operating powerboats at high speeds have the potential to result in serious injuries or fatalities. This special local regulation proposes temporary regulated areas to restrict vessel movement around the location of the powerboat race to reduce the risks associated with racing vessels operating within congested waterways. For these reasons the Coast Guard is proposing three temporary regulated areas on the Atlantic Ocean, from 8:30 a.m. to 3:30 p.m. on August 23, 2014 and from 8:30 a.m. to 6:30 p.m. on August 24, 2014:

(1) *Race Course Area.* This area is for the exclusive use of registered event participants, safety, support, and official vessels.

(2) *No Entry Area.* This area serves as a buffer zone that separates racing vessels from spectators.

(3) *Spectator Viewing Area.* This area is for the exclusive use of spectator vessels. The sponsor will mark this area.

The geographic locations of these regulated areas and specific requirements of this rule are contained in the regulatory text.

Because a number of spectator vessels are expected to congregate around the location of this event, these regulated areas are needed to protect both spectators and participants from the safety hazards created by them, including powerboats traveling at high speeds and congested waterways. During the enforcement periods, persons and vessels would be prohibited from entering, transiting through, remaining, anchoring or mooring within the regulated areas unless stipulated otherwise or specifically authorized by the COTP or the designated representative. The Coast Guard may be assisted by other federal, state, and local agencies in the enforcement of these regulated areas.

The Coast Guard determined that these regulated areas would not have a significant impact on vessel traffic due to their temporary nature and the fact that vessels are allowed to transit the navigable waters outside of the regulated areas.

The Coast Guard has ordered special local regulations and safety zones for this event when it was held in different locations and has received no public comments or concerns regarding the impact to waterway traffic. Advanced public notifications would be made to the local maritime community through all appropriate means which may include, but is not limited to, Local Notice to Mariners and Broadcast Notice to Mariners.

E. Regulatory Analyses

We developed this proposed rule after considering numerous statutes and executive orders related to rulemaking. Below we summarize our analyses based on a number of these statutes or executive orders.

1. Regulatory Planning and Review

This proposed rule is not a significant regulatory action under section 3(f) of Executive Order 12866, Regulatory Planning and Review, as supplemented by Executive Order 13563, Improving Regulation and Regulatory Review, and does not require an assessment of potential costs and benefits under section 6(a)(3) of Executive Order 12866 or under section 1 of Executive Order 13563. The Office of Management and Budget has not reviewed it under those Orders.

The Coast Guard determined that this proposed rulemaking is not a significant regulatory action because the regulated areas would be of limited duration and vessels may transit the navigable waterways outside of the regulated areas. Additionally, persons or vessels requiring entry into the regulated areas may be authorized to do so by the COTP Sector Long Island Sound or designated representative.

Advanced public notifications would also be made to local mariners through appropriate means, which may include but is not limited to, Local Notice to Mariners and Broadcast Notice to Mariners.

2. Impact on Small Entities

The Regulatory Flexibility Act of 1980 (RFA), 5 U.S.C. 601–612, as amended, requires federal agencies to consider the potential impact of regulations on small entities during rulemaking. The term ''small entities'' comprises small businesses, not-for-profit organizations that are independently owned and operated and are not dominant in their fields, and governmental jurisdictions with populations of less than 50,000. The Coast Guard certifies under 5 U.S.C. 605(b) that this proposed rule will not have a significant economic impact on a substantial number of small entities.

This proposed rule would affect the following entities, some of which may be small entities: The owners or operators of vessels intending to enter, transit, anchor or moor within the regulated areas on August 23, 2014 from 8:30 a.m. to 3:30 p.m. and on August 24, 2014 from 8:30 a.m. until 6:30 p.m.

This proposed temporary special local regulation will not have a significant economic impact on a substantial number of small entities for the following reasons: The regulated areas are of short duration, vessels that can safely do so may navigate in all other portions of the waterways except for the areas designated as regulated areas, and vessels requiring entry into the regulated areas may be authorized to do so by the COTP Sector Long Island Sound or designated representative. Additionally, before the effective period, public notifications would be made to local mariners through appropriate means, which may include but is not limited to, Local Notice to Mariners and Broadcast Notice to Mariners.

If you think that your business, organization, or governmental jurisdiction qualifies as a small entity and that this proposed rule would have a significant economic impact on it, please submit a comment (see **ADDRESSES**) explaining why you think it qualifies and how and to what degree this rule would economically affect it.

3. Assistance for Small Entities

Under section 213(a) of the Small Business Regulatory Enforcement Fairness Act of 1996 (Pub. L. 104–121), we want to assist small entities in understanding this proposed rule. If the rule would affect your small business, organization, or governmental jurisdiction and you have questions concerning its provisions or options for compliance, please contact the person listed in the **FOR FURTHER INFORMATION CONTACT**, above. The Coast Guard will not retaliate against small entities that question or complain about this proposed rule or any policy or action of the Coast Guard.

4. Collection of Information

This proposed rule will not call for a new collection of information under the Paperwork Reduction Act of 1995 (44 U.S.C. 3501–3520.).

5. Federalism

A rule has implications for federalism under Executive Order 13132, Federalism, if it has a substantial direct effect on the States, on the relationship between the national government and the States, or on the distribution of power and responsibilities among the various levels of government. We have analyzed this proposed rule under that Order and determined that this rule does not have implications for federalism.

6. Protest Activities

The Coast Guard respects the First Amendment rights of protesters. Protesters are asked to contact the person listed in the **FOR FURTHER INFORMATION CONTACT** section to coordinate protest activities so that your message can be received without jeopardizing the safety or security of people, places or vessels.

7. Unfunded Mandates Reform Act

The Unfunded Mandates Reform Act of 1995 (2 U.S.C. 1531–1538) requires Federal agencies to assess the effects of their discretionary regulatory actions. In particular, the Act addresses actions that may result in the expenditure by a State, local, or tribal government, in the aggregate, or by the private sector of $100,000,000 (adjusted for inflation) or more in any one year. Though this proposed rule would not result in such an expenditure, we do discuss the effects of this rule elsewhere in this preamble.

8. Taking of Private Property

This proposed rule would not cause a taking of private property or otherwise have taking implications under Executive Order 12630, Governmental Actions and Interference with Constitutionally Protected Property Rights.

9. Civil Justice Reform

This proposed rule meets applicable standards in sections 3(a) and 3(b)(2) of Executive Order 12988, Civil Justice Reform, to minimize litigation, eliminate ambiguity, and reduce burden.

10. Protection of Children From Environmental Health Risks

We have analyzed this proposed rule under Executive Order 13045, Protection of Children from Environmental Health Risks and Safety Risks. This proposed rule is not an economically significant rule and would not create an environmental risk to health or risk to safety that might disproportionately affect children.

11. Indian Tribal Governments

This proposed rule does not have tribal implications under Executive Order 13175, Consultation and Coordination with Indian Tribal Governments, because it would not have a substantial direct effect on one or more Indian tribes, on the relationship between the Federal Government and Indian tribes, or on the distribution of power and responsibilities between the Federal Government and Indian tribes.

12. Energy Effects

This proposed rule is not a ''significant energy action'' under Executive Order 13211, Actions Concerning Regulations That Significantly Affect Energy Supply, Distribution, or Use.

13. Technical Standards

This proposed rule does not use technical standards. Therefore, we did not consider the use of voluntary consensus standards.

14. Environment

We have analyzed this proposed rule under Department of Homeland Security Management Directive 023–01 and Commandant Instruction M16475.lD, which guide the Coast Guard in complying with the National Environmental Policy Act of 1969 (NEPA)(42 U.S.C. 4321–4370f), and have made a preliminary determination that this action is one of a category of actions that do not individually or cumulatively have a significant effect on the human environment. This proposed rule involves the establishment of special local regulations. This rule may be categorically excluded from further review under paragraph 34(h) of Figure 2–1 of the Commandant Instruction. A preliminary environmental analysis checklist supporting this determination is available in the docket where indicated under **ADDRESSES**. We seek any comments or information that may lead to the discovery of a significant

environmental impact from this proposed rule.

List of Subjects in 33 CFR Part 100

Marine safety, Navigation (water), Reporting and recording requirements, Waterways.

For the reasons discussed in the preamble, the Coast Guard proposes to amend 33 CFR part 100 as follows:

PART 100—SAFETY OF LIFE ON NAVIGABLE WATERS

■ 1. The authority citation for part 100 continues to read as follows:

Authority: 33 U.S.C. 1233.

■ 2. Add § 100.35T01–0407 to read as follows:

§ 100.35T01–0407 Special Local Regulation; Great Race On The Sea, Powerboat Race, Atlantic Ocean, Long Beach, NY.

(a) *Regulated Areas.* All coordinates are North American Datum 1983 (NAD 83).

(1) ''*Race Course Area'':* All navigable waters of the Atlantic Ocean off Long Beach, NY within the following boundaries: Beginning at point ''A'' at position 40°34′15.84″ N, 073°36′03.82″ W, then west to point ''B″ at position 40°34′06.68″ N, 073°40′09.27″ W, then north to point ''C'' at position 40°34′48.56″ N, 073°40′08.70″ W, then east to point ''D″ at position 40°34′53.33″ N, 073°36′14.93″ W, then south to the point of origin, point ''A''.

(2) ''*No Entry Area'':* A buffer zone comprising all navigable waters of the Atlantic Ocean surrounding the ''Race Course Area'' and extending from the south border 700 feet outwards, from the east and west borders 1000 feet outwards and from the north border extending to the shoreline.

(3) ''*Spectator Viewing Area'':* All navigable waters of the Atlantic Ocean off Long Beach, NY within the following boundaries: Beginning at point ''A'' at position 40°34′00.59″ N, 073°35′53.34″ W, then west to point ''B'' at position 40°33′54.27″ N, 073°38′33.75″ W, then north to point ''C'' at position 40°34′03.29″ N, 073°38′34.11″ W, then east to point ''D'' at position 40°34′09.15″ N, 073°35′56.24″ W, then south to the point of origin, point ''A''.

(b) *Special Local Regulations.*

(1) In accordance with the general regulations found in section 100.35 of this part, entering into, transiting through, anchoring or remaining within the regulated areas is prohibited unless authorized by the Captain of the Port (COTP) Sector Long Island Sound, or designated representative.

(2) The following persons and vessels are authorized by the COTP Sector Long Island Sound to enter areas of this special local regulation:

(i) ''*Race Course Area'':* Registered event participants, safety, support, and official vessels.

(ii) ''*No Entry Area'':*

(A) Registered regatta participants, safety, support, and official vessels may transit to or from the ''Race Course Area'' at a speed of 25 knots or less when racing is halted.

(B) Swimmers may utilize all shoreline waters up to 100 feet from shore (i.e. end of the jetties).

(iii) ''*Spectator Viewing Area'':* Spectator vessels engaged in viewing the powerboat race.

(3) All persons and vessels shall comply with the instructions of the COTP Sector Long Island Sound or designated representative. These designated representatives are comprised of commissioned, warrant, and petty officers of the Coast Guard. Upon being hailed by a U.S. Coast Guard vessel by siren, radio, flashing lights, or other means the operator of a vessel shall proceed as directed.

(4) Persons and vessels desiring to enter, transit through, anchor in, or remain within the regulated areas must contact the COTP Sector Long Island Sound by telephone at (203) 468–4401, or designated representative via VHF radio on channel 16, to request authorization. If authorization to enter, transit through, anchor in, or remain within the regulated areas is granted by the COTP Sector Long Island Sound or designated representative, all persons and vessels receiving such authorization must comply with the instructions of the COTP Sector Long Island Sound or designated representative.

(5) The Coast Guard will provide notice of the regulated areas prior to the event through appropriate means, which may include but is not limited to, the Local Notice to Mariners and Broadcast Notice to Mariners.

(c) *Definitions.* The following definitions apply to this section:

(1) *Designated Representative.* A ''designated representative'' is any commissioned, warrant, or petty officer of the U.S. Coast Guard who has been designated by the Captain of the Port, Sector Long Island Sound to act on his or her behalf. The designated representative may be on an official patrol vessel or may be on shore and will communicate with vessels via VHF–FM radio or loudhailer. In addition, members of the Coast Guard Auxiliary may be present to inform vessel operators of this regulation.

(2) *Official Patrol Vessels.* Official patrol vessels may consist of any Coast Guard, Coast Guard Auxiliary, state, or local law enforcement vessels assigned or approved by the COTP Sector Long Island Sound.

(3) *Spectators.* All persons and vessels not registered with the event sponsor as participants or official patrol vessels.

(d) *Enforcement Period:* This section will be enforced from 8:30 a.m. until 3:30 p.m. on August 23, 2014 and from 8:30 a.m. until 6:30 p.m. on August 24, 2014.

Dated: June 30, 2014.

H.L. Morrison,

Commander, U.S. Coast Guard, Acting Captain of the Port, Sector Long Island Sound.

[FR Doc. 2014–16158 Filed 7–10–14; 8:45 am]

BILLING CODE 9110–04–P

DEPARTMENT OF COMMERCE

Patent and Trademark Office

37 CFR Part 1

[Docket No.: PTO–P–2014–0012]

RIN 0651–AC95

Changes To Facilitate Applicant's Authorization of Access to Unpublished U.S. Patent Applications by Foreign Intellectual Property Offices

AGENCY: United States Patent and Trademark Office, Commerce.

ACTION: Notice of proposed rulemaking.

SUMMARY: The electronic sharing of information and documents between intellectual property (IP) offices is critical for increasing the efficiency and quality of patent examination worldwide. Current examples of this sharing include the priority document exchange (PDX) program and the program by which U.S. search results are delivered to the European Patent Office (EPO). In support of electronic file sharing, the United States Patent and Trademark Office (Office) is proposing to amend its rules of practice to include a specific provision by which an applicant can authorize the Office to give a foreign IP office access to all or part of the file contents of an unpublished U.S. patent application in order to satisfy a requirement for information imposed on a counterpart application filed with the foreign intellectual property office. Currently, for unpublished U.S. patent applications, applicants follow one regulatory provision to provide the Office with authorization for a foreign IP office to access an application-as-filed via a PDX program and follow another

regulatory provision to provide the Office with authorization to share the file contents with a foreign IP office. The proposed changes to the rules will consolidate the specific provisions of the regulations by which applicants give the Office authority to provide a foreign IP office with access to an application in order to satisfy a requirement for information of the foreign IP office. Additionally, along with changes to the application data sheet (ADS) form, the proposed rule changes will simplify the process for how applicants provide the Office with the required authorization, thereby reducing the resources applicants must expend to comply with these foreign IP office requirements, and enhance the quality of patent examination.

DATES: Written comments must be received on or before September 9, 2014.

ADDRESSES: Comments should be sent by electronic mail message over the Internet addressed to: *AC95.comments@uspto.gov.* Comments also may be submitted by postal mail addressed to: Mail Stop Comments—Patents, Commissioner for Patents, P.O. Box 1450, Alexandria, VA 22313–1450, marked to the attention of either Susy Tsang-Foster, Senior Legal Advisor, or Joseph F. Weiss, Jr., Senior Legal Advisor, Office of Patent Legal Administration, Office of the Deputy Commissioner for Patent Examination Policy.

Comments further may be sent by electronic mail message over the Internet via the Federal eRulemaking Portal. See the Federal eRulemaking Portal Web site (*http://www.regulations.gov*) for additional instructions on providing comments via the Federal eRulemaking Portal.

Although comments may be submitted by postal mail, the Office prefers to receive comments by electronic mail message over the Internet because sharing comments with the public is more easily accomplished. Electronic comments are preferred to be submitted in plain text, but also may be submitted in ADOBE® portable document format or MICROSOFT WORD® format. Comments not submitted electronically should be submitted on paper in a format that facilitates convenient digital scanning into ADOBE® portable document format.

The comments will be available for public inspection at the Office of the Commissioner for Patents, currently located in Madison East, Tenth Floor, 600 Dulany Street, Alexandria, Virginia. Comments also will be available for viewing via the Office's Internet Web site (*http://www.uspto.gov*). Because comments will be made available for public inspection, information that the submitter does not desire to make public, such as an address or phone number, should not be included in the comments.

FOR FURTHER INFORMATION CONTACT: Susy Tsang-Foster, Senior Legal Advisor ((571) 272–7711), or Joseph F. Weiss, Jr., Senior Legal Advisor ((571) 272–2259), Office of Patent Legal Administration, Office of the Deputy Commissioner for Patent Examination Policy.

SUPPLEMENTARY INFORMATION: The electronic sharing of information and documents between IP offices is critical for increasing the efficiency and quality of patent examination worldwide. The electronic sharing of documents between IP offices also benefits applicants by reducing the cost of ordering documents from one IP office and then filing them in another IP office where a counterpart application has been filed.

Due to the confidential nature of unpublished U.S. patent applications, set forth in 35 U.S.C. 122, an applicant must provide the Office with written authority in accordance with 37 CFR 1.14 to grant a foreign IP office access to an unpublished U.S. patent application. With this grant of authority, the Office may electronically provide the U.S. patent application-as-filed or the requested file contents, such as information and documents, from the U.S. patent application to the foreign IP office on behalf of the applicant.

Currently, applicants comply with 37 CFR 1.14(h) when authorizing the Office to give a foreign IP office participating in a bilateral or multilateral priority document exchange agreement access to an unpublished U.S. priority application-as-filed. 37 CFR 1.14(h), however, does not provide a specific provision by which an applicant can authorize the Office to provide a foreign IP office access to an unpublished U.S. patent application's file contents including documents and other information in order to satisfy a requirement for information imposed on a counterpart application from a U.S. applicant by the foreign IP office. As a result, U.S. applicants, unprompted by the rules, must provide written authority for access by a foreign IP office to an unpublished application's contents in accordance with 37 CFR 1.14(c).

The Office is proposing to amend 37 CFR 1.14(h) to include a specific provision by which an applicant can authorize the Office to give a foreign IP office access to all or part of the file contents (as opposed to a copy of the application-as-filed) of an unpublished patent application, including search results, to satisfy a foreign IP office requirement for information on a counterpart application filed by an U.S. applicant. The proposed changes to 37 CFR 1.14(h) would consolidate the provisions by which applicants authorize the Office to give access to an unpublished application-as-filed or its file contents to a foreign IP office, while also clarifying for applicants the provision of 37 CFR 1.14 under which such access authorization can be provided. The proposed rule change will further serve as a reminder of the opportunity for applicants to grant the Office with the authority to provide a foreign IP office with access to file contents of an unpublished U.S. patent application.

Any information concerning an unpublished application or documents from an unpublished application will only be shared in accordance with the authority provided by applicant and in accordance with the terms of any agreement between the Office and respective foreign IP offices. The Office is not proposing any fee for this service. In addition, sharing of information and documents would be limited to those foreign IP offices where applicant has filed a counterpart application and provided written authority to give a foreign IP office access to all or part of the file contents of an unpublished U.S. application.

The proposed changes to 37 CFR 1.14(h) emphasize the Office's continued support of work sharing efforts between IP offices to increase the quality of issued patents, as well as its commitment to assist in reducing the expenditure of resources of its applicants when complying with the requirements of a foreign IP office for a counterpart application.

Revision to Application Data Sheet Form: In addition to the proposed rule changes, the Office is planning to revise the application data sheet (ADS) form, PTO/AIA/14 (ADS form). The revised ADS form would include separate access authorizations for the PDX program and certain work sharing initiatives for which the Office has an agreement with one or more foreign IP offices.

The submission of a properly signed revised ADS form with the appropriate authorization language would be a specific act authorizing access. After a revised ADS form including the authorization language for access by foreign IP office(s) and signed in accordance with 37 CFR 1.14(c) and

1.33(b) has been submitted and placed in the application file, the Office would give the foreign IP office(s) access to the contents in accordance with the specific authorization language upon request of the foreign IP office.

In contrast to the current ADS form, the revised ADS form would include an ''opt-out'' check box for each access authorization and not an ''opt-in'' check box. Therefore, when an ''opt-out'' check box for a specific authorization to access is selected, the Office would not provide access to the contents of the application associated with that check box. The revised ADS form will make it easier for applicants to give the statutorily required authorization for access to specific file contents, as well as afford an applicant the opportunity to inform the Office that the required authority to allow a foreign IP office specific access to an application has not been given. Appropriate authorization language for access in any ADS generated by applicant must mirror the authorization language provided in the Office's revised ADS form. Where an applicant-generated ADS does not include the required authorization language for access by a foreign IP office, the ADS will be interpreted as not providing the authorization necessary to give a foreign IP office access.

The changes to the Office's ADS form should reduce those instances where an applicant inadvertently fails to provide authorization necessary to participate in PDX (by not selecting the opt-in check box for priority document exchange authorization on the current ADS form) and, as a result, must expend resources to obtain and file a copy of a U.S. priority document with a foreign IP office. Similarly, this approach will help eliminate those instances where an applicant inadvertently fails to give the Office authority (by filing form PTO/SB/69) to provide the EPO with the search results from an unpublished U.S. priority application and, as a consequence, must expend resources to file the results with the EPO.

The Office will not deliver an unpublished priority document, file contents of an unpublished application, including information about an unpublished application, to a foreign IP office, even where a counterpart application has been filed, if applicant does not provide proper written authority for access. As discussed above, the revised ADS form would need to be executed in accordance with 37 CFR 1.33(b), and if there is written authority for any access by a foreign IP office, the revised ADS form also must be executed in accordance with 37 CFR 1.14(c). Applicants should be aware of the differences in signature requirements under 37 CFR 1.33(b) and under 37 CFR 1.14(c). For example, under 37 CFR 1.33(b) in applications filed on or after September 16, 2012, the following individuals can sign:

- A patent practitioner of record;
- A patent practitioner not of record who acts in a representative capacity under the provisions of 37 CFR 1.34; or
- The applicant under 37 CFR 1.42.

Unless otherwise specified, all papers submitted on behalf of a juristic entity must be signed by a patent practitioner.

By contrast, under 37 CFR 1.14(c) in applications filed on or after September 16, 2012, the following individuals can sign:

- The applicant;
- A patent practitioner of record;
- The assignee or an assignee of an undivided part interest;
- The inventor or a joint inventor; or
- A registered attorney or agent named in the papers accompanying the application papers filed under 37 CFR 1.53 or the national stage under 37 CFR 1.495, if a power of attorney has not been appointed under 37 CFR 1.32.

Where forms PTO/SB/39 for PDX authorization and PTO/SB/69 for search results authorization are used instead of the revised ADS form, these forms must still be executed in accordance with 37 CFR 1.14(c) even though written authority is provided for under proposed 37 CFR 1.14(h). If the revised ADS form is not signed in accordance with the relevant rules, then applicant has not provided written authority for access by a foreign IP office to an application.

The transaction of sharing documents and information from a U.S. application with a foreign IP office has several built in safeguards to ensure that only authorized sharing occurs. For example, in order for a foreign IP office to receive information about a U.S. application, the Office requires that the foreign IP office expressly identify the U.S. application serial number, along with other elements of bibliographic data for each U.S. application in its request, to ensure that only the correct U.S. application's information will be given to the foreign IP office. Once the application is properly identified, the Office will then determine whether the requisite authorization for access exists in the U.S. application. The Office will only share information or other file content from a U.S. application with a foreign IP office when both the correct application is identified and the existence of proper authorization is confirmed. If an unpublished application, which has not been foreign filed, includes an unintended access authorization pursuant to proposed 37 CFR 1.14(h), a foreign IP office would not obtain access because it would not have the information necessary to request access to that specific U.S. application. Further, the U.S. application's filing receipt will indicate whether applicant has provided written authority for access pursuant to proposed 37 CFR 1.14(h). Applicants should inspect the application filing receipt and request a corrected filing receipt if authorization for access under proposed 37 CFR 1.14(h) was incorrectly captured from the revised ADS form or applicant-generated ADS. If authorization for access was inadvertently given, a request for rescission of the authorization can be made, and the Office should be informed of such rescission as early as possible so the Office has time to recognize the request for rescission and act upon it.

To avoid inconsistent means of authorization for access and to avoid duplicative processing, the Office also is considering removal of the opt-in check box and associated authorization language for the PDX program from the inventor's oath or declaration form (PTO/SB/01 for applications filed before September 16, 2012 and PTO/AIA/08 for applications filed on or after September 16, 2012). Form PTO/SB/39 for the priority document exchange authorization and Form PTO/SB/69 for the search results authorization will remain available for applicants that do not use an ADS form or have selected the check boxes for opting out of specific authorizations for access by a foreign IP office on the revised ADS form, but later decide to give a foreign IP office access to the application.

Discussion of Specific Rules: The following is a discussion of the amendments to title 37 of the Code of Federal Regulations, part 1, which are being proposed in this document.

Section 1.14: Section 1.14(h)(1) is proposed to retain the first sentence of current § 1.14(h)(1) and include the provisions from current § 1.14(h)(3). Proposed § 1.14(h)(1) also would be amended to include that the date of filing of the written authority for priority document exchange may be provided to the respective participating foreign IP office, which codifies the practice set forth in the Official Gazette of the United States Patent and Trademark Office (1328 OG 90 (March 11, 2008)). In proposed § 1.14(h)(1), the text added from current § 1.14(h)(3) has been amended to delete the language ''indicated in the written authority.'' This deleted language is not necessary

as written authority for access under current § 1.14(h) and proposed § 1.14(h) will result in access being granted to all PDX and WIPO Digital Access Service (DAS) participating foreign IP offices in which a subsequently filed application claims benefit of the earlier filed U.S. application. Within the WIPO DAS system, however, there is an option where an applicant may decide which WIPO DAS foreign IP office(s) are granted or not granted access.

Proposed § 1.14(h)(1)(i) and (ii) also are amended to include the term ''bibliographic data'' to reflect that ''bibliographic data'' is used to ensure the correct application-as-filed is being provided to the participating foreign IP office requesting access in any access to the application-as-filed transaction. The term bibliographic data as used in proposed § 1.14(h)(1) covers certain bibliographic data set forth in WIPO standard ST.9 for bibliographic data. The bibliographic data used to confirm that the correct application-as-filed is being provided may include the patent document identification, filing data, priority data, publication data, data concerning technical information such as patent classification (international or domestic), and title of the invention.

Proposed § 1.14(h)(2) would permit an applicant to authorize the Office to grant a foreign IP office access to the file contents of an application where a counterpart application has been filed with a foreign IP office and the counterpart application is subject to a requirement for information from the application filed with the Office. The Office would only provide access to the relevant portion or portions of an unpublished U.S. application's file contents necessary to satisfy any requirement for information by the foreign IP office, triggered by the U.S. applicant filing a counterpart application with the foreign IP office. The Office and the foreign IP office would need to have a bilateral or multilateral agreement that provides for the secure transmission and receipt of any shared information. Proposed § 1.14(h)(2)(i) includes the term ''bibliographic data'' to reflect that ''bibliographic data'' is used to ensure the information is from the correct application for which access has been requested by the foreign IP office in any access to the application. The term bibliographic data as used in § 1.14(h)(2) includes the same types of bibliographic data set discussed above with respect to § 1.14(h)(1).

Current § 1.14(h)(2) has been moved to proposed § 1.14(h)(3).

Section 1.14(h)(3) as proposed indicates that written authority provided under proposed §§ 1.14(h)(1) and (h)(2) should be submitted before the filing of any subsequent foreign application in which priority is claimed to the application. Section 1.14(h)(3) as proposed also indicates that the written authority under §§ 1.14(h)(1) and (2) must include the title of the invention (§ 1.72(a)), comply with the requirements of § 1.14(c), and must be submitted on an application data sheet (§ 1.76) or on a separate document (§ 1.4(c)).

Section 1.19: Section 1.19(b)(1)(iv) is proposed to be amended to indicate there is no fee for providing a foreign IP office with a copy of either an application-as-filed or patent related file wrapper and contents pursuant to a bilateral or multilateral agreement (see § 1.14(h)).

Rulemaking Considerations

A. *Administrative Procedure Act:* This rulemaking amends the rules of practice to include a specific provision by which an applicant can authorize the Office to give a foreign IP office access to all or part of the file contents of an application, and thus pertains solely to the process for an applicant to provide a limited waiver of confidentiality under 35 U.S.C. 122(a) to allow a counterpart IP office access to all or part of the file contents of an application. Therefore, the changes proposed in this rulemaking involve rules of agency practice and procedure and/or interpretive rules. *See Bachow Commc'ns Inc.* v. *F.C.C.,* 237 F.3d 683, 690 (D.C. Cir. 2001) (rules governing an application process are procedural under the Administrative Procedure Act); *Inova Alexandria Hosp.* v. *Shalala,* 244 F.3d 342, 350 (4th Cir. 2001) (rules for handling appeals were procedural where they did not change the substantive standard for reviewing claims).

Accordingly, prior notice and opportunity for public comment are not required pursuant to 5 U.S.C. 553(b) or (c) (or any other law). *See Cooper Techs. Co.* v. *Dudas,* 536 F.3d 1330, 1336–37 (Fed. Cir. 2008) (stating that 5 U.S.C. 553, and thus 35 U.S.C. 2(b)(2)(B), does not require notice and comment rulemaking for ''interpretative rules, general statements of policy, or rules of agency organization, procedure, or practice'') (quoting 5 U.S.C. 553(b)(A)). The Office, however, is publishing these proposed changes for comment as it seeks the benefit of the public's views on the Office's proposed changes to provide the Office with authority to give a foreign IP office access to all or part of the file contents of an application.

B. *Regulatory Flexibility Act:* For the reasons set forth herein, the Deputy General Counsel for General Law of the United States Patent and Trademark Office has certified to the Chief Counsel for Advocacy of the Small Business Administration that changes proposed in this document will not have a significant economic impact on a substantial number of small entities. *See* 5 U.S.C. 605(b).

This rulemaking amends the rules of practice to include a specific provision by which an applicant can authorize the Office to give a foreign IP office access to all or part of the file contents of an application. This rulemaking consolidates and clarifies in one place—37 CFR 1.14(h)—existing procedures in both 37 CFR 1.14(c) and (h) relevant to authorizing the Office to provide a foreign IP office access to all or part of the file contents of an application or to an application-as-filed. The changes in this rulemaking do not require any applicant to provide the Office with this authority. There is no fee for this service. Therefore, the changes proposed in this document will not have a significant economic impact on a substantial number of small entities.

C. *Executive Order 12866 (Regulatory Planning and Review):* This rulemaking has been determined to be not significant for purposes of Executive Order 12866 (Sept. 30, 1993).

D. *Executive Order 13563 (Improving Regulation and Regulatory Review):* The Office has complied with Executive Order 13563. Specifically, the Office has, to the extent feasible and applicable: (1) Made a reasoned determination that the benefits justify the costs of the rule; (2) tailored the rule to impose the least burden on society consistent with obtaining the regulatory objectives; (3) selected a regulatory approach that maximizes net benefits; (4) specified performance objectives; (5) identified and assessed available alternatives; (6) involved the public in an open exchange of information and perspectives among experts in relevant disciplines, affected stakeholders in the private sector, and the public as a whole, and provided on-line access to the rulemaking docket; (7) attempted to promote coordination, simplification, and harmonization across government agencies and identified goals designed to promote innovation; (8) considered approaches that reduce burdens and maintain flexibility and freedom of choice for the public; and (9) ensured the objectivity of scientific and technological information and processes.

E. *Executive Order 13132 (Federalism):* This rulemaking does not

contain policies with federalism implications sufficient to warrant preparation of a Federalism Assessment under Executive Order 13132 (Aug. 4, 1999).

F. *Executive Order 13175 (Tribal Consultation):* This rulemaking will not: (1) Have substantial direct effects on one or more Indian tribes; (2) impose substantial direct compliance costs on Indian tribal governments; or (3) preempt tribal law. Therefore, a tribal summary impact statement is not required under Executive Order 13175 (Nov. 6, 2000).

G. *Executive Order 13211 (Energy Effects):* This rulemaking is not a significant energy action under Executive Order 13211 because this rulemaking is not likely to have a significant adverse effect on the supply, distribution, or use of energy. Therefore, a Statement of Energy Effects is not required under Executive Order 13211 (May 18, 2001).

H. *Executive Order 12988 (Civil Justice Reform):* This rulemaking meets applicable standards to minimize litigation, eliminate ambiguity, and reduce burden as set forth in sections 3(a) and 3(b)(2) of Executive Order 12988 (Feb. 5, 1996).

I. *Executive Order 13045 (Protection of Children):* This rulemaking does not concern an environmental risk to health or safety that may disproportionately affect children under Executive Order 13045 (Apr. 21, 1997).

J. *Executive Order 12630 (Taking of Private Property):* This rulemaking will not affect a taking of private property or otherwise have taking implications under Executive Order 12630 (Mar. 15, 1988).

K. *Congressional Review Act:* Under the Congressional Review Act provisions of the Small Business Regulatory Enforcement Fairness Act of 1996 (5 U.S.C. 801 *et seq.*), prior to issuing any final rule, the United States Patent and Trademark Office will submit a report containing the final rule and other required information to the United States Senate, the United States House of Representatives, and the Comptroller General of the Government Accountability Office. The changes in this proposed rule are not expected to result in an annual effect on the economy of 100 million dollars or more, a major increase in costs or prices, or significant adverse effects on competition, employment, investment, productivity, innovation, or the ability of United States-based enterprises to compete with foreign-based enterprises in domestic and export markets. Therefore, this proposed rule is not expected to result in a ''major rule'' as defined in 5 U.S.C. 804(2).

L. *Unfunded Mandates Reform Act of 1995:* The changes set forth in this proposed rule do not involve a Federal intergovernmental mandate that will result in the expenditure by State, local, and tribal governments, in the aggregate, of 100 million dollars (as adjusted) or more in any one year, or a Federal private sector mandate that will result in the expenditure by the private sector of 100 million dollars (as adjusted) or more in any one year, and will not significantly or uniquely affect small governments. Therefore, no actions are necessary under the provisions of the Unfunded Mandates Reform Act of 1995. *See* 2 U.S.C. 1501 *et seq.*

M. *National Environmental Policy Act:* This rulemaking will not have any effect on the quality of the environment and is thus categorically excluded from review under the National Environmental Policy Act of 1969. *See* 42 U.S.C. 4321 *et seq.*

N. *National Technology Transfer and Advancement Act:* The requirements of section 12(d) of the National Technology Transfer and Advancement Act of 1995 (15 U.S.C. 272 note) are not applicable because this rulemaking does not contain provisions which involve the use of technical standards.

O. *Paperwork Reduction Act:* The Paperwork Reduction Act of 1995 (44 U.S.C. 3501 *et seq.*) requires that the Office consider the impact of paperwork and other information collection burdens imposed on the public. This rulemaking involves information collection requirements which are subject to review by the Office of Management and Budget (OMB) under the Paperwork Reduction Act of 1995 (44 U.S.C. 3501–3549). The collection of information involved in this rulemaking has been reviewed and previously approved by OMB under OMB Control Numbers 0651–0031 and 0651–0032. The Office is not resubmitting an information collection package to OMB for its review and approval because the changes in this rulemaking do not change patent fees or change the information collection requirements (the estimated number of respondents, time per response, total annual respondent burden hours, or total annual respondent cost burden) associated with the information collections approved under OMB Control Numbers 0651–0031 and 0651–0032.

Notwithstanding any other provision of law, no person is required to respond to, nor shall a person be subject to a penalty for failure to comply with, a collection of information subject to the requirements of the Paperwork Reduction Act, unless that collection of information displays a currently valid OMB control number.

List of Subjects in 37 CFR Part 1

Administrative practice and procedure, Courts, Freedom of information, Inventions and patents, Reporting and recordkeeping requirements, Small businesses.

For the reasons stated in the preamble, 37 CFR part 1 is proposed to be amended as follows:

PART 1—RULES OF PRACTICE IN PATENT CASES

■ 1. The authority citation for 37 CFR part 1 continues to read as follows:

Authority: 35 U.S.C. 2(b)(2).

■ 2. Section 1.14 is amended by revising paragraph (h) to read as follows:

§ 1.14 Patent applications preserved in confidence.

* * * * *

(h) *Access by a Foreign Intellectual Property Office.* (1) Access to an application-as-filed may be provided to any foreign intellectual property office participating with the Office in a bilateral or multilateral priority document exchange agreement (participating foreign intellectual property office), if the application contains written authority granting such access. Written authority provided under this paragraph (h)(1) will be treated as authorizing the Office to provide to all participating foreign intellectual property offices in accordance with their respective agreements with the Office:

(i) A copy of the application-as-filed and its related bibliographic data;

(ii) A copy of the application-as-filed of any application the filing date of which is claimed by the application in which written authority under this paragraph (h)(1) is filed and its related bibliographic data; and

(iii) The date of filing of the written authorization under this paragraph (h)(1).

(2) Access to the file contents of an application may be provided to a foreign intellectual property office if a counterpart application filed with the foreign intellectual property office is subject to a requirement for information from the application filed with the Office, the application contains written authority granting the foreign intellectual property office access to the required information, and the Office and the foreign intellectual property office have a bilateral or multilateral agreement to provide the required information. Written authority provided

under this paragraph (h)(2) will be treated as authorizing the Office to provide to all foreign intellectual property offices indicated in the written authority in accordance with their respective agreements with the Office:

(i) Bibliographic data regarding the application; and

(ii) Any content of the application file necessary to satisfy the foreign intellectual property office requirement for information indicated in the respective agreement.

(3) Written authority provided under paragraphs (h)(1) and (h)(2) of this section must include the title of the invention (§ 1.72(a)), comply with the requirements of paragraph (c) of this section, and be submitted on an application data sheet (§ 1.76) or on a separate document (§ 1.4(c)). The written authority provided under these paragraphs should be submitted before filing any subsequent foreign application in which priority is claimed to the application.

■ 3. Section 1.19 is amended by revising paragraph (b)(1)(iv) to read as follows:

§ 1.19 Document supply fees.

* * * * *

(b) * * *

(1) * * *

(iv) If provided to a foreign intellectual property office pursuant to a bilateral or multilateral agreement (see § 1.14(h)): $0.00.

* * * * *

Dated: July 2, 2014.

Michelle K. Lee,

Deputy Under Secretary of Commerce for Intellectual Property and Deputy Director of the United States Patent and Trademark Office.

[FR Doc. 2014–16062 Filed 7–10–14; 8:45 am]

BILLING CODE 3510–16–P

ENVIRONMENTAL PROTECTION AGENCY

40 CFR Part 168

[EPA–HQ–OPP–2009–0607; FRL–9913–19]

RIN 2070–AJ53

Labeling of Pesticide Products and Devices for Export; Clarification of Requirements

AGENCY: Environmental Protection Agency (EPA).

ACTION: Proposed rule.

SUMMARY: EPA is proposing to amend the regulations that pertain to the labeling of pesticide products and devices that are intended solely for export. These amendments clarify that pesticide products and devices that are intended solely for export must meet the Agency's labeling requirements by attaching a label to the immediate product container or by providing collateral labeling that is either attached to the immediate product being exported or that accompanies the shipping container of the product being exported at all times when it is shipped or held for shipment in the United States. Collateral labeling will ensure the availability of the required labeling information, while allowing pesticide products and devices that are intended solely for export to be labeled for use in and consistent with the applicable requirements of the importing country.

DATES: Comments must be received on or before August 11, 2014.

ADDRESSES: Submit your comments, identified by docket identification (ID) number EPA–HQ–OPP–2009–0607, by one of the following methods:

- *Federal eRulemaking Portal: http://www.regulations.gov.* Follow the online instructions for submitting comments. Do not submit electronically any information you consider to be Confidential Business Information (CBI) or other information whose disclosure is restricted by statute.
- *Mail:* OPP Docket, Environmental Protection Agency Docket Center (EPA/DC), (28221T), 1200 Pennsylvania Ave. NW., Washington, DC 20460–0001.
- *Hand Delivery:* To make special arrangements for hand delivery or delivery of boxed information, please follow the instructions at *http://www.epa.gov/dockets/contacts.html.* Additional instructions on commenting or visiting the docket, along with more information about dockets generally, is available at *http://www.epa.gov/dockets.*

FOR FURTHER INFORMATION CONTACT: Kathryn Boyle, Field and External Affairs Division (7506P), Office of Pesticide Programs, Environmental Protection Agency, 1200 Pennsylvania Ave. NW., Washington, DC 20460–0001; telephone number: (703) 305–6304; email address: *boyle.kathryn@epa.gov.*

SUPPLEMENTARY INFORMATION:

I. Executive Summary

A. Does this action affect me?

You may be potentially affected by this action if you export a pesticide product, a pesticide device, or an active ingredient used in producing a pesticide. The following list of North American Industrial Classification System (NAICS) codes is not intended to be exhaustive, but rather provides a guide to help readers determine whether this document applies to them. Potentially affected entities may include, but are not limited to: Pesticide and other agricultural chemical manufacturing (NAICS code 325320), e.g., Pesticides manufacturing, Insecticides manufacturing, Herbicides manufacturing, Fungicides manufacturing, etc.

B. What is the Agency's authority for taking this action?

This action is issued under the authority of section 25(a) of the Federal Insecticide, Fungicide, and Rodenticide Act (FIFRA), 7 U.S.C. 136w(a), to carry out the provisions of FIFRA section 17(a), 7 U.S.C. 136o(a).

C. What action is the Agency taking?

EPA is proposing to amend the regulations that pertain to the labeling of pesticide products and devices that are intended solely for export. These amendments clarify that pesticide products and devices that are intended solely for export must meet the Agency's labeling requirements by attaching a label to the immediate product container or by providing collateral labeling that is either attached to the immediate product being exported or that accompanies the shipping container of the product being exported at all times when it is shipped or held for shipment in the United States. Collateral labeling will ensure the availability of the required labeling information, while allowing pesticide products and devices that are intended solely for export to be labeled for use in and consistent with the applicable requirements of the importing country.

D. What are the impacts of this action?

There are no costs associated with this action, and the benefits provided are related to avoiding potential costs. Without these labeling provisions, registrants would be required to place export-related labeling on the immediate package of each individual pesticide product in a shipping container that is intended solely for export. According to stakeholders, the inability to use the labeling method allowed under the previous regulations could significantly increase their costs and create trade barriers.

II. Background

A. The April 30, 2014 Direct Final Rule

Industry stakeholders subsequently brought to the Agency's attention their concern that removing the term ''supplemental labeling'' resulted in the removal of a provision stating that such supplemental labeling can be attached to a shipping container holding export

pesticides or devices rather than to each individual product container in a shipment. They stated that the inability of registrants to use ''supplemental labeling'' in that manner could create trade barriers and increase costs. The purpose of the direct final rule EPA published in the **Federal Register** of April 30, 2014 (79 FR 24347) (FRL–9909–82) was to address those concerns as expeditiously as possible.

As indicated in the direct final rule, EPA now believes that the term ''supplemental labeling'' is not the appropriate term to describe the material or documentation used to meet the requirements of the export labeling rules. To more accurately describe the materials other than ''labels'' that are acceptable for meeting these requirements, EPA believes that a better term is ''collateral labeling.'' EPA has already described collateral labeling in the Label Review Manual (LRM), p. 3–2 (see *http://www.epa.gov/oppfead1/labeling/lrm/chap-03.pdf*), as follows:

> Bulletins, leaflets, circulars, brochures, data sheets, flyers or other written, printed or graphic matter which are referred to on the label or which are to accompany the product are known in Agency practice as ''collateral labeling.'' Such labeling is subject to applicable requirements of FIFRA and the Agency's regulations.

Accordingly, the direct final rule used the term ''collateral labeling'' in restoring the ability of exporters to comply with export labeling requirements through materials that are not attached to each individual export product's immediate container. The direct final rule provided amendments for revising existing 40 CFR 168.66 to remove the reference to 40 CFR 156.10(a)(4), and to restore the inadvertently eliminated provisions that allowed exporters to use such collateral labeling attached to, or accompanying, the product shipping container of the export pesticide at all times when shipped or held for shipment in the United States. The direct final rule also restructures 40 CFR part 168, subpart D, by moving the text in § 168.68 and some of the text in § 168.66 to new § 168.65.

B. Summary of the April 6, 2011 Proposed Rule

In the **Federal Register** of April 6, 2011 (76 FR 18995) (FRL–8862–2), EPA issued a proposed rule to clarify, restructure, and add specificity to labeling regulations for the export of unregistered pesticide products and devices. Additionally, that proposed rule explicitly requires labeling to accompany the unregistered export pesticide product or device at all times, even when such products are being shipped between registered establishments operated by the same producer.

C. Public Comments on the April 6, 2011 Proposed Rule

Six sets of comments were submitted. Two of the commenters pointed out several inconsistencies in the use of the terms ''label,'' ''labeling,'' and ''supplemental labeling'' in the proposed rule. One of those commenters also urged ''that all labeling requirements should be in compliance with existing regulations under 40 CFR 156.'' The comments are available in the docket under docket ID number EPA–HQ–OPP–2009–0607.

EPA analyzed the comments and prepared a response to comments document, which is available in the docket under document ID number EPA–HQ–OPP–2009–0607–0016. As part of analyzing the comment on inconsistencies in the use of the terms ''label,'' ''labeling,'' and ''supplemental labeling,'' EPA referred to FIFRA's definitions of ''label'' and ''labeling.'' Section 2(p)(1) of FIFRA defines label as ''the written, printed, or graphic matter on, or attached to, the pesticide or device or any of its containers or wrappers.'' Under FIFRA section 2(p)(2), labeling is a more inclusive term which includes labels as well as ''all other written, printed, or graphic matter'' that accompanies the product at any time, or to which reference is made on a label or in literature accompanying the pesticide or device. Because the two terms are not interchangeable, EPA agreed that inconsistent use could create confusion. Thus, as EPA began to write the regulatory text for the final rule, the Agency carefully evaluated the regulatory text for possibly confusing uses of the terms ''label'' and ''labeling.''

During that evaluation, and bearing in mind the comment that ''all labeling requirements should be in compliance with existing regulations under 40 CFR 156,'' EPA analyzed proposed § 168.66(b). Proposed § 168.66(b) specified that ''the required label information may be fully met by'' and then provided several examples of ways to provide the required label information. One of the examples referred to ''supplemental labeling.'' At that time, EPA determined to provide a reference to the existing label regulations in 40 CFR part 156, instead of providing examples of ways to meet the required label information. Specifically, EPA referred to 40 CFR 156.10(a)(4), believing that provision would provide appropriate and accurate information.

D. The January 18, 2013 Final Rule

The final rule entitled ''Labeling of Pesticide Products and Devices for Export; Clarification of Requirements'' published in the **Federal Register** of January 18, 2013 (78 FR 4073) (FRL–9360–8). This final rule was effective on March 19, 2013, with a compliance date of January 21, 2014.

III. Withdrawal of the April 30, 2014 Direct Final Rule

In the preamble to the direct final rule, EPA explained the Agency's reasons for these amendments, and that we would withdraw that direct final rule if written adverse comment were received within 30 days of the publication of that direct final rule. Since EPA received written adverse comments, elsewhere in this issue of the **Federal Register**, EPA has withdrawn the direct final rule, and the direct final rule will not take effect.

In accordance with the procedures described in the April 30, 2014 direct final rule, EPA is publishing this proposed rule.

IV. Issues Raised by the Adverse Comments

EPA received two written adverse comments in response to the direct final rule. Both commenters indicated their disagreement with EPA's approach on the use of collateral labeling. Their comments indicated their belief that individual pesticide products should be properly labeled, even if intended solely for export. One commenter indicated that this would only ''benefit the large pesticide producers, allowing them to cut the cost of production by not properly labeling everything.'' The other commenter indicated that labeling ''is critical to safe and rational use of pesticides.''

EPA believes that both commenters misinterpreted the intent of the direct final rule and interpreted the direct final rule as removing or eliminating requirements. The amendments specified in the direct final rule do not remove or eliminate label requirements for individual pesticide products or devices that are intended solely for export. The amendments would have simply clarified that the label requirements for products intended for export can be met with labeling on the individual products with the addition of collateral labeling attached to either the product or the product shipment container.

Typically, products that are manufactured in the United States for export bear a label which meets the requirements of the importing country.

Since that label may not meet all the FIFRA labeling requirements contained in 40 CFR part 168, the regulations previously allowed for these products to meet those requirements by labeling attached to the shipping container. As an example, a shrink-wrapped pallet of cartons would have only one FIFRA export label attached to the shrink-wrap. A pallet of unwrapped cartons, on the other hand, would have FIFRA export labels attached to each carton. In both cases, the individual products in those cartons are individually labeled for use in the importing country and in compliance with the applicable labeling requirements of that importing country. EPA believes that collateral labeling is appropriate for shipping containers holding pesticide products and devices that are intended solely for export because it ensures the availability of the information provided by the FIFRA export label requirements while those products are in transit in the United States.

The amendments specified in the direct final rule were not to establish a new or substantively different requirement from that which existed until 2013, when a final rule inadvertently deleted the applicable provisions. After considering these adverse comments, EPA has determined no changes are needed, and is proposing the same regulatory text as that in the April 30, 2014 direct final rule.

V. FIFRA Review Requirements

In accordance with FIFRA section 25(a), EPA previously submitted the draft proposed rule to the Secretary of Agriculture (USDA), the FIFRA Scientific Advisory Panel (SAP), and the appropriate Congressional Committees. On February 10, 2014, the FIFRA SAP waived its review of this proposed rule because the changes ''are administrative in nature and do not contain scientific issues that require the SAP's consideration.'' On March 12, 2014, USDA waived review of this proposed rule, because this action merely ''corrects the regulatory text.''

VI. Statutory and Executive Order Reviews

A. Executive Order 12866: Regulatory Planning and Review and Executive Order 13563: Improving Regulation and Regulatory Review

This proposed rule is not a ''significant regulatory action'' under the terms of Executive Order 12866 (58 FR 51735, October 4, 1993) and was not, therefore, submitted to the Office of Management and Budget (OMB) for review under Executive Orders 12866 and 13563 (76 FR 3821, January 21, 2011).

B. Paperwork Reduction Act (PRA)

According to PRA, 44 U.S.C. 3501 *et seq.,* an agency may not conduct or sponsor, and a person is not required to respond to a collection of information that requires OMB approval under PRA, unless it has been approved by OMB and displays a currently valid OMB control number. The OMB control numbers for EPA regulations in title 40 of the CFR, after appearing in the **Federal Register**, are listed in 40 CFR part 9, and included on the related collection instrument or form, as applicable.

The information collection requirements associated with reporting under 40 CFR part 168 have already been approved by OMB pursuant to PRA under OMB control number 2070–0027 (EPA ICR No. 0161). This proposed rule is not expected to involve an increase in information collection activities. There are no additional burdens imposed by this proposed rule that requires additional review or approval by OMB.

C. Regulatory Flexibility Act (RFA)

I certify that this action, if finalized as proposed, will not have a significant economic impact on a substantial number of small entities under RFA, 5 U.S.C. 601 *et seq.* In making this determination, the impact of concern is any significant adverse economic impact on small entities, because the primary purpose of an initial regulatory flexibility analysis is to identify and address regulatory alternatives ''which minimize any significant economic impact of the rule on small entities'' 5 U.S.C. 603. Thus, an agency may certify that a rule will not have a significant economic impact on a substantial number of small entities if the rule has no net burden effect on the small entities subject to the rule. As indicated previously, EPA is restoring a provision that was inadvertently removed from the regulation. We have therefore concluded that this action will have no net regulatory burden for all directly regulated small entities.

D. Unfunded Mandates Reform Act (UMRA)

This action does not contain any unfunded mandate as described in UMRA, 2 U.S.C. 1531–1538, and does not significantly or uniquely affect small governments. This action imposes no enforceable duty on any State, local, or Tribal governments, because no State, local, or Tribal government is known to produce, transport, formulate, package, or export unregistered pesticide products or devices. As indicated previously, EPA is restoring a provision that was inadvertently removed from the regulation.

E. Executive Order 13132: Federalism

This action will not have substantial direct effect on States, on the relationship between the national government and the States, or on the distribution of power and responsibilities among the various levels of government, as specified in Executive Order 13132 (64 FR 43255, August 10, 1999).

F. Executive Order 13175: Consultation and Coordination With Indian Tribal Governments

This proposed rule does not have tribal implications because it is expected to only affect producers, transporters, formulators, packagers, and exporters of unregistered pesticide products and devices. Since no Indian Tribal government is known to produce, transport, formulate, package, or export unregistered pesticide products or devices, this action has no tribal implications. Accordingly, the requirements of Executive Order 13175 (65 FR 67249, November 9, 2000) does not apply to this proposed rule.

G. Executive Order 13045: Protection of Children From Environmental Health Risks and Safety

This action is not subject to Executive Order 13045 (62 FR 19885, April 23, 1997), because this action does not address environmental health or safety risks disproportionately affecting children.

H. Executive Order 13211: Actions Concerning Regulations That Significantly Affect Energy Supply, Distribution, or Use

This action is not subject to Executive Order 13211 (66 FR 28355, May 22, 2001), because this action is not expected to affect energy supply, distribution, or use.

I. National Technology Transfer and Advancement Act (NTTAA)

Since this action does not involve any technical standards, NTTAA section 12(d), 15 U.S.C. 272 note, does not apply to this action.

J. Executive Order 12898: Federal Actions To Address Environmental Justice in Minority Populations and Low-Income Populations

EPA has determined that this action will not have disproportionately high and adverse human health or

environmental effects on minority or low-income populations because it increases the level of environmental protection for all affected populations without having any disproportionately high and adverse human health or environmental effects on any population, including any minority or low-income population. As such, this action does not entail special considerations of environmental justice related issues as delineated by Executive Order 12898 (59 FR 7629, February 16, 1994).

List of Subjects in 40 CFR Part 168

Environmental protection, Administrative practice and procedure, Advertising, Exports, Labeling, Pesticides and pests, Reporting and recordkeeping requirements.

Dated: July 3, 2014.

James Jones,

Assistant Administrator, Office of Chemical Safety and Pollution Prevention.

Therefore, it is proposed that 40 CFR chapter I be amended as follows:

PART 168—[AMENDED]

■ 1. The authority citation for part 168 continues to read as follows:

Authority: 7 U.S.C. 136–136y.

■ 2. Revise the heading for subpart D to part 168 to read as follows:

Subpart D—Procedures for Exporting Pesticides

■ 3. Add § 168.65 to subpart D to read as follows:

§ 168.65 Applicability.

(a) This subpart describes the labeling requirements applicable to pesticide products and devices that are intended solely for export from the United States under the provisions of FIFRA section 17(a).

(b) This subpart applies to all export pesticide products and export pesticide devices that are exported for any purpose, including research.

(c) Export pesticide products and export pesticide devices are also subject to requirements for pesticide production reporting, recordkeeping and inspection, and purchaser acknowledgement provisions that can be found in the following parts:

(1) Pesticide production reporting requirements under FIFRA section 7 are located in part 167 of this chapter (as referenced in § 168.85(b)).

(2) Recordkeeping and inspection requirements under FIFRA section 8 are located in part 169 of this chapter (as referenced in § 168.85(a)).

(3) Purchaser acknowledgement statement provisions under FIFRA section 17(a) are located in § 168.75.

■ 4. Revise § 168.66 to read as follows:

§ 168.66 Labeling of pesticide products and devices for export.

Any label and labeling information requirements in §§ 168.69, 168.70, and 168.71 that are not met fully on the product label attached to the immediate product container may be met by collateral labeling that is either:

(a) Attached to the immediate product (container label); or

(b) Attached to or accompanies the shipping container of the export pesticide or export device at all times when it is shipped or held for shipment in the United States.

§ 168.68 [Removed and Reserved]

■ 5. Remove and reserve § 168.68.

■ 6. In § 168.69, revise paragraph (a) to read as follows:

§ 168.69 Registered export pesticide products.

(a) Each export pesticide product that is registered under FIFRA section 3 or FIFRA section 24(c) must bear labeling approved by EPA for its registration or collateral labeling in compliance with § 168.66.

* * * * *

■ 7. In § 168.70, revise the introductory text of paragraph (b) to read as follows:

§ 168.70 Unregistered export pesticide products.

* * * * *

(b) Each unregistered export pesticide product must bear labeling that complies with all requirements of this section or collateral labeling in compliance with § 168.66:

* * * * *

■ 8. In § 168.71, revise paragraph (a) to read as follows:

§ 168.71 Export pesticide devices.

(a) Each export pesticide device sold or distributed anywhere in the United States must bear labeling that complies with all requirements of this section or collateral labeling in compliance with § 168.66.

* * * * *

[FR Doc. 2014–16274 Filed 7–10–14; 8:45 am]

BILLING CODE 6560–50–P

ENVIRONMENTAL PROTECTION AGENCY

40 CFR Part 180

[EPA–HQ–OPP–2014–0194; FRL–9910–45]

RIN 2070–ZA16

Amitraz, Carfentrazone-ethyl, Ethephon, Malathion, Mancozeb, et al.; Proposed Tolerance Actions

AGENCY: Environmental Protection Agency (EPA).

ACTION: Proposed rule.

SUMMARY: EPA is proposing to revoke certain tolerances for the fungicides spiroxamine and triflumizole, the herbicides carfentrazone-ethyl and quizalofop ethyl; the insecticides amitraz, oxamyl, propetamphos, and spinosad; and the plant growth regulators ethephon and mepiquat. In addition, EPA is proposing to revoke the tolerance on rice straw for multiple active ingredients. Also, EPA is proposing to modify certain tolerances for the fungicides mancozeb, thiram, and triflumizole; and the insecticide malathion. In addition, EPA is proposing to establish new tolerances for the fungicide mancozeb. Also, in accordance with current Agency practice, EPA is proposing to make minor revisions to the tolerance expression for malathion, mepiquat, and thiram.

DATES: Comments must be received on or before September 9, 2014.

ADDRESSES: Submit your comments, identified by docket identification (ID) number EPA–HQ–OPP–2014–0194, by one of the following methods:

- *Federal eRulemaking Portal: http://www.regulations.gov.* Follow the online instructions for submitting comments. Do not submit electronically any information you consider to be Confidential Business Information (CBI) or other information whose disclosure is restricted by statute.
- *Mail:* OPP Docket, Environmental Protection Agency Docket Center (EPA/DC), (28221T), 1200 Pennsylvania Ave. NW., Washington, DC 20460–0001.
- *Hand Delivery:* To make special arrangements for hand delivery or delivery of boxed information, please follow the instructions at *http://www.epa.gov/dockets/contacts.html.*

Additional instructions on commenting or visiting the docket, along with more information about dockets generally, is available at *http://www.epa.gov/dockets.*

FOR FURTHER INFORMATION CONTACT: Joseph Nevola, Pesticide Re-Evaluation Division (7508P), Office of Pesticide

Programs, Environmental Protection Agency, 1200 Pennsylvania Ave. NW., Washington, DC 20460–0001; telephone number: (703) 308–8037; email address: *nevola.joseph@epa.gov.*

SUPPLEMENTARY INFORMATION:

I. General Information

A. Does this action apply to me?

You may be potentially affected by this action if you are an agricultural producer, food manufacturer, or pesticide manufacturer. The following list of North American Industrial Classification System (NAICS) codes is not intended to be exhaustive, but rather provides a guide to help readers determine whether this document applies to them. Potentially affected entities may include:

- Crop production (NAICS code 111).
- Animal production (NAICS code 112).
- Food manufacturing (NAICS code 311).
- Pesticide manufacturing (NAICS code 32532).

B. What should I consider as I prepare my comments for EPA?

1. *Submitting CBI.* Do not submit this information to EPA through regulations.gov or email. Clearly mark the part or all of the information that you claim to be CBI. For CBI information in a disk or CD–ROM that you mail to EPA, mark the outside of the disk or CD–ROM as CBI and then identify electronically within the disk or CD–ROM the specific information that is claimed as CBI. In addition to one complete version of the comment that includes information claimed as CBI, a copy of the comment that does not contain the information claimed as CBI must be submitted for inclusion in the public docket. Information so marked will not be disclosed except in accordance with procedures set forth in 40 CFR part 2.

2. *Tips for preparing your comments.* When submitting comments, remember to:

i. Identify the document by docket ID number and other identifying information (subject heading, **Federal Register** date and page number).

ii. Follow directions. The Agency may ask you to respond to specific questions or organize comments by referencing a Code of Federal Regulations (CFR) part or section number.

iii. Explain why you agree or disagree; suggest alternatives and substitute language for your requested changes.

iv. Describe any assumptions and provide any technical information and/or data that you used.

v. If you estimate potential costs or burdens, explain how you arrived at your estimate in sufficient detail to allow for it to be reproduced.

vi. Provide specific examples to illustrate your concerns and suggest alternatives.

vii. Explain your views as clearly as possible, avoiding the use of profanity or personal threats.

viii. Make sure to submit your comments by the comment period deadline identified.

C. What can I do if I wish the agency to maintain a tolerance that the agency proposes to revoke?

This proposed rule provides a comment period of 60 days for any person to state an interest in retaining a tolerance proposed for revocation. If EPA receives a comment within the 60-day period to that effect, EPA will not proceed to revoke the tolerance immediately. However, EPA will take steps to ensure the submission of any needed supporting data and will issue an order in the **Federal Register** under the Federal Food, Drug, and Cosmetic Act (FFDCA) section 408(f), if needed. The order would specify data needed and the timeframes for its submission, and would require that within 90 days some person or persons notify EPA that they will submit the data. If the data are not submitted as required in the order, EPA will take appropriate action under FFDCA.

EPA issues a final rule after considering comments that are submitted in response to this proposed rule. In addition to submitting comments in response to this proposal, you may also submit an objection at the time of the final rule. If you fail to file an objection to the final rule within the time period specified, you will have waived the right to raise any issues resolved in the final rule. After the specified time, issues resolved in the final rule cannot be raised again in any subsequent proceedings.

II. Background

A. What action is the agency taking?

EPA is proposing to revoke, modify, and establish specific tolerances for residues of the fungicides mancozeb, spiroxamine, thiram, and triflumizole; the herbicides carfentrazone-ethyl and quizalofop ethyl; the insecticides amitraz, malathion, oxamyl, propetamphos, and spinosad; and the plant growth regulators ethephon and mepiquat in or on commodities listed in the regulatory text. In addition, EPA is proposing to revoke the tolerances on rice straw for multiple active ingredients because it is no longer considered by the Agency to be a significant feed item.

Also, EPA is proposing to make minor revisions to the tolerance expressions for malathion, mepiquat, and thiram in accordance with current Agency practice to describe more clearly the measurement of residues for tolerances and coverage of metabolites and degradates of a pesticide by the tolerances. The revisions to the tolerance expressions do not substantively change the tolerance or, in any way, modify the permissible level of residues permitted by the tolerances.

EPA is proposing to revoke certain tolerances because they are no longer needed or are associated with food uses that are no longer registered under the Federal Insecticide, Fungicide, and Rodenticide Act (FIFRA).

The proposed tolerance actions for mancozeb and malathion are consistent with the recommendations in their Reregistration Eligibility Decisions (REDs) of 2005 and 2009, respectively. As part of the tolerance reassessment process, EPA is required to determine whether each of the amended tolerances meets the safety standard of FFDCA. The safety finding determination of ''reasonable certainty of no harm'' is discussed in detail in each RED. REDs recommend the implementation of certain tolerance actions, including modifications to reflect current use patterns, meet safety findings, and change commodity names and groupings in accordance with new EPA policy. Printed copies of many REDs may be obtained from EPA's National Service Center for Environmental Publications (EPA/NSCEP), P.O. Box 42419, Cincinnati, OH 45242–2419; telephone number: 1–800–490–9198; fax number: 1–513–489–8695; Internet at *http://www.epa.gov/ncepihom* and from the National Technical Information Service (NTIS), 5285 Port Royal Rd., Springfield, VA 22161; telephone number: 1–800–553–6847 or (703) 605–6000; Internet at *http://www.ntis.gov.* Electronic copies are available on the Internet for the malathion and mancozeb REDs in dockets EPA–HQ–OPP–2004–0348 and EPA–HQ–OPP–2005–0176, respectively, at *http://www.regulations.gov* and at *http://www.epa.gov/pesticides/reregistration/status.htm.*

In REDs, Chapter IV on risk management, reregistration, and tolerance reassessment typically describes the regulatory position, cumulative safety determination, determination of safety for U.S. general population, and safety for infants and children. In particular, the human

health risk assessment document which supports the RED describes risk exposure estimates and whether the Agency has concerns. EPA also seeks to harmonize tolerances with international standards set by the Codex Alimentarius Commission, as described in Unit III.

Explanations for proposed modifications in tolerances can be found in the RED document and in more detail in the Residue Chemistry Chapter document which supports the RED. Copies of the Residue Chemistry Chapter documents are found in the Administrative Record and electronic copies for malathion and mancozeb can be found under their respective docket ID numbers, identified in Unit II.A. Electronic copies of other support documents (including explanations for proposed modifications in triflumizole tolerances) are available through EPA's electronic docket and comment system, regulations.gov at *http://www.regulations.gov.* You may search for this proposed rule under docket ID number EPA–HQ–OPP–2014–0194, then click on that docket ID number to view its contents.

EPA had determined at the time of the RED that the aggregate exposures and risks are not of concern for the above mentioned pesticide active ingredients based upon the data identified in the RED which lists the submitted studies that the Agency found acceptable.

EPA has found that the tolerances that are proposed in this document to be modified, are safe; i.e., that there is a reasonable certainty that no harm will result to infants and children from aggregate exposure to the pesticide chemical residues, in accordance with FFDCA section 408(b)(2)(C). (Note that changes to tolerance nomenclature do not constitute modifications of tolerances). These findings are discussed in detail in each RED. The references are available for inspection as described in this document under **SUPPLEMENTARY INFORMATION.**

In addition, it is EPA's general practice to propose revocation of those tolerances for residues of pesticide active ingredients on crop uses for which there are no active registrations under FIFRA, unless any person in comments on the proposal indicates a need for the tolerance to cover residues in or on imported commodities or legally treated domestic commodities.

EPA is proposing to revoke specific tolerances for residues of mepiquat and triflumizole because the Agency has concluded that there is no reasonable expectation of finite residues in or on the commodities associated with the tolerances, and therefore these tolerances are no longer needed.

The determinations that there are no reasonable expectations of finite residues for the tolerances listed in this document were made based on feeding studies submitted since the time that the tolerances were originally established. These feeding studies used exaggerated amounts of the compound and did not show measurable residues of the pesticide active ingredient tested. The Agency made the determination that there is no reasonable expectation of finite residues for the pesticides active ingredient/commodity combinations listed in this proposal in memoranda of July 30, 2001 for mepiquat and October 1, 2008 for triflumizole. Copies of these memoranda can be found in the docket for this proposed rule. Because EPA determined that there is no reasonable expectation of finite residues, under 40 CFR 180.6 the tolerances are no longer needed under FFDCA and can be proposed for revocation.

1. *Multiple active ingredients.* EPA has determined that rice straw is no longer a significant feed item in the United States, and therefore the tolerance is no longer needed and should be revoked. (The document entitled ''OPPTS Test Guideline 860.1000 Supplement: Guidance on Constructing Maximum Reasonably Balanced Diets (MRBD)'' is available at *http://www.regulations.gov* under docket ID number EPA–HQ–OPPT–2009–0155). Consequently, EPA is proposing to revoke the tolerances for rice, straw in 40 CFR 180.142(a) for 2,4–D; 180.169(a)(1) for carbaryl; 180.205(a) for paraquat; 180.274(a) for propanil; 180.288(a) for 2-(thiocyanomethylthio)benzothiazole; 180.293(a)(1) for endothall; 180.301(a) for carboxin; 180.355(a)(1) for bentazon; 180.361(a) for pendimethalin; 180.377(a)(2) for diflubenzuron; 180.383(a) for sodium salt of acifluorfen; 180.399(a)(1) for iprodione; 180.401(a) for thiobencarb; 180.417(a)(1) for triclopyr; 180.418(a)(2) for zeta-cypermethrin; 180.425(a) for clomazone; 180.434(a) for propiconazole; 180.438(a)(1) for lambda-cyhalothrin; 180.438(a)(2) for gamma-cyhalothrin and its epimer; 180.439(a) for thifensulfuron methyl; 180.445(a) for bensulfuron methyl; 180.447(a)(2) for imazethapyr; 180.451(a) for tribenuron methyl; 180.463(a)(1) for quinclorac; 180.473(a) for glufosinate ammonium; 180.479(a)(2) for halosulfuron-methyl; 180.484(a) for flutolanil; 180.507(a)(1) for azoxystrobin; 180.517(a) for fipronil; 180.555(a) for trifloxystrobin; 180.570(a)(2) for isoxadifen-ethyl; 180.577(a) for bispyribac-sodium; 180.605(a) for penoxsulam; and 180.625(a) for orthosulfamuron.

2. *Amitraz.* There have been no active U.S. registrations for use of amitraz on cotton since May 3, 2006 and the manufacturer, Arysta Life Sciences, notified EPA in July 2011 that it no longer is interested in supporting the tolerance for amitraz use on cotton, undelinted seed for import purposes. The tolerance is no longer needed and therefore should be revoked. Consequently, EPA is proposing to revoke the tolerance for amitraz in 40 CFR 180.287(a) on cotton, undelinted seed.

3. *Carfentrazone-ethyl.* Because the first cotton processing study submitted by the registrant was conducted at 1.0x the seasonal application rate and resulted in residues less than the Limit of Quantitation (LOQ) of 0.05 ppm, EPA requested that a processing study be conducted at an application rate sufficient to generate residues in/on cottonseed and set tolerances for cotton hulls, meal, and oil using theoretical processing factors and the highest average cottonseed field trial residue. Based on an available second processing study conducted at 2.0x the seasonal application rate, which showed that carfentrazone-ethyl residues of concern in or on cottonseed were detected (Limit of Detection 0.015–0.020 ppm) but were less than the LOQ of 0.05 ppm, EPA determined that the tolerances for carfentrazone-ethyl residues of concern are no longer needed on cottonseed hull, meal, and oil and therefore should be revoked. Consequently, EPA is proposing to revoke the tolerances for carfentrazone-ethyl in 40 CFR 180.515(a) on cotton, hulls; cotton, meal; and cotton, refined oil.

Because uses supported by the carfentrazone-ethyl tolerance for caneberry subgroup 13A at 0.1 ppm are covered by the tolerance for berry group 13 at 0.10 ppm, there is no longer any need for the separate subgroup tolerance and therefore it should be revoked. In addition, because EPA no longer considers rice straw to be a significant feed item, the tolerance is no longer needed and should be revoked. Consequently, EPA is proposing to revoke the tolerances for carfentrazone-ethyl in 40 CFR 180.515(a) on caneberry subgroup 13A and rice, straw.

4. *Ethephon.* Because the last product label amendment has been completed which limits the use of ethephon to cucumbers grown for seed production only and restricts the harvesting of treated cucumbers for human or animal consumption, a food tolerance for ethephon is no longer needed and therefore should be revoked.

Consequently, EPA is proposing to revoke the tolerance for ethephon in 40 CFR 180.300(a) on cucumber.

5. *Malathion.* EPA is proposing to modify the plant tolerance commodity levels for certain existing malathion tolerances in 40 CFR 180.111(a)(1) based on available field trial data and product label changes. Currently, those tolerances are established for residues of malathion. However, as stated in the 2009 amended RED for malathion, based on available plant metabolism data, EPA determined that the residues of concern in plants consist of malathion and its metabolite, malaoxon, and therefore the tolerance expression for plant commodities should be revised. Because EPA is not proposing to modify all of the plant commodity tolerances in 40 CFR 180.111(a)(1) at this time, EPA is proposing that those specific tolerances which it is proposing to modify herein be redesignated from 40 CFR 180.111(a)(1) to 40 CFR 180.111(a)(2), where tolerances are currently established for malathion and its metabolite malaoxon. Also, in accordance with current Agency practice to describe more clearly the measurement and scope or coverage of the tolerances, EPA is proposing to revise the introductory text containing the tolerance expression in 40 CFR 180.111(a)(2) to read as set out in the proposed regulatory text at the end of this document.

Based on product label changes to their use patterns and available field trial data that showed malathion residues of concern in or on apricot as high as <0.65 ppm, avocado as high as <0.08 ppm, fig as high as <0.41 ppm, grape as high as 2.78 ppm, macadamia nut as high as <0.10 ppm, melon as high as <0.85 ppm, mushroom as high as <0.10 ppm, okra as high as <2.23 ppm, bulb onion as high as <0.60 ppm, green onion as high as 4.88 ppm, peach as high as <3.64 ppm, pear as high as 2.23 ppm, peppermint and spearmint tops as high as 1.43 ppm, EPA determined that the tolerances should be decreased from 8 to 1.0 ppm, 8 to 0.2 ppm, 8 to 1.0 ppm, 8 to 4.0, 1 to 0.2 ppm, 8 to 1.0 ppm, 8 to 0.2 ppm, 8 to 3.0 ppm, 8 to 1.0, 8 to 6.0, 8 to 6.0 ppm, 8 to 3.0 ppm, 8 to 2.0 ppm, and 8 to 2.0 ppm, respectively. Therefore, EPA is proposing to decrease the tolerances in 40 CFR 180.111(a)(1) for apricot, fig, melon, and onion, bulb to 1.0 ppm, avocado, mushroom, and nut, macadamia to 0.2 ppm, grape to 4.0 ppm, okra and pear to 3.0 ppm, onion, green and peach to 6.0 ppm, peppermint, tops and spearmint, tops to 2.0 ppm, and redesignate them to 40 CFR 180.111(a)(2).

Available residue data may be translated by the Agency from one commodity to another related commodity where appropriate (e.g., have similar use patterns). Based on their use patterns and the translation of apricot data to nectarine, bulb onion data to garlic, and green onion data to leek and shallot (data previously mentioned herein), EPA determined that the tolerances for nectarine, bulb garlic, leek, and bulb shallot should be decreased from 8 to 1.0 ppm, 8 to 1.0 ppm, 8 to 6 ppm, and 8 to 6 ppm, respectively. Therefore, EPA is proposing to decrease the tolerances in 40 CFR 180.111(a)(1) for nectarine and garlic, bulb to 1.0 ppm, and leek and shallot, bulb to 6.0 ppm, and redesignate them to 40 CFR 180.111(a)(2).

Based on their use patterns and the translation of melon data (data previously mentioned herein) to pumpkin and winter squash, EPA determined that the tolerances for pumpkin and winter squash should each be decreased from 8 to 1.0 ppm. Therefore, EPA is proposing to decrease the tolerances in 40 CFR 180.111(a)(1) for pumpkin; and squash, winter; each to 1.0 ppm, and redesignate them to 40 CFR 180.111(a)(2).

Based on its use pattern and available field trial data that showed malathion residues of concern in or on asparagus were as high as 1.38 ppm, EPA determined that the tolerance should be decreased from 8 to 2.0 ppm. Therefore, EPA is proposing to decrease the tolerance in 40 CFR 180.111(a)(1) for asparagus to 2.0 ppm, and redesignate it to 40 CFR 180.111(a)(2).

Based on their use patterns and available field trial data that showed malathion residues of concern in or on blackberry as high as 3.99 ppm and raspberry as high as 4.96 ppm, EPA determined that the tolerances should be decreased from 8 to 6 ppm and 8 to 6 ppm, respectively. Therefore, EPA is proposing to decrease the tolerances in 40 CFR 180.111(a)(1) for blackberry and raspberry to 6 ppm, and redesignate them to 40 CFR 180.111(a)(2).

Based on their use patterns and the translation of blackberry and/or raspberry data (data previously mentioned herein) to boysenberry, dewberry, gooseberry, and loganberry, EPA determined that the tolerances for boysenberry, dewberry, gooseberry, and loganberry should each be decreased from 8 to 6 ppm. Therefore, EPA is proposing to decrease the tolerances in 40 CFR 180.111(a)(1) for boysenberry, dewberry, gooseberry, and loganberry, each to 6 ppm, and redesignate them to 40 CFR 180.111(a)(2).

Based on their use patterns and available field trial data that showed malathion residues of concern in or on turnip greens as high as 3.40 ppm and turnip roots as high as <0.18 ppm, EPA determined that the tolerances should be decreased from 8 to 4.0 ppm and 8 to 0.5 ppm, respectively. Therefore, EPA is proposing to decrease the tolerances in 40 CFR 180.111(a)(1) for turnip, greens to 4.0 ppm and turnip, roots to 0.5 ppm, and redesignate them to 40 CFR 180.111(a)(2).

Based on their use patterns and the translation of turnip greens data (data previously mentioned herein) to garden beet tops and salsify tops, EPA determined that the tolerances for beet, garden, tops and salsify, tops; should each be decreased from 8 to 4.0 ppm. Therefore, EPA is proposing to decrease the tolerances in 40 CFR 180.111(a)(1) for beet, garden, tops; and salsify, tops; each to 4.0 ppm, and redesignate them to 40 CFR 180.111(a)(2).

Based on their use patterns and the translation of the turnip root data (data previously mentioned herein) to garden beet roots, horseradish, parsnip, radish, rutabaga, and salsify roots, EPA determined that the tolerances for beet, garden, roots; horseradish; parsnip; radish; rutabaga; and salsify, roots; should each be decreased from 8 to 0.5 ppm. Therefore, EPA is proposing to decrease the tolerances in 40 CFR 180.111(a)(1) for beet, garden, roots, horseradish; parsnip; radish; rutabaga; and salsify, roots; each to 0.5 ppm, and redesignate them to 40 CFR 180.111(a)(2).

Based on their use patterns and available field trial data that showed malathion residues of concern in or on potatoes as high as 0.05 ppm, and translation of that data to chayote roots and sweet potato roots, EPA determined that the tolerances should be decreased from 8 to 0.1 ppm for potato; chayote, roots; and sweet potato, roots. Therefore, EPA is proposing to decrease the tolerances in 40 CFR 180.111(a)(1) for potato; chayote, roots; and sweet potato, roots; each to 0.1 ppm, and redesignate them to 40 CFR 180.111(a)(2).

Based on their use patterns and cucumber data which showed malathion residues of concern as high as <0.11 ppm, and translation of that data to chayote fruit and summer squash, EPA determined that the tolerances for chayote fruit and summer squash should be decreased from 8 to 0.2 ppm. Therefore, EPA is proposing to decrease the tolerances in 40 CFR 180.111(a)(1) for chayote, fruit; and squash, summer; each to 0.2 ppm, and redesignate them to 40 CFR 180.111(a)(2).

Based on their use patterns and tomato data, which showed malathion residues of concern as high as 1.54 ppm, and translation of that data to eggplant, EPA determined that the tolerance for eggplant should be decreased from 8 to 2.0 ppm. Therefore, EPA is proposing to decrease the tolerance in 40 CFR 180.111(a)(1) for eggplant to 2.0 ppm, and redesignate it to 40 CFR 180.111(a)(2).

Based on their use patterns and available field trial data that showed malathion residues of concern in or on alfalfa and clover forage as high as 110.12 ppm and 120.14 ppm, respectively, and translation of that data to trefoil forage, EPA determined that the tolerances should be decreased from 135 to 125 ppm for alfalfa, clover, and trefoil forage. Also, based on its use pattern and available field trial data that showed malathion residues of concern in or on clover hay as high as 120.50 ppm, EPA determined that the tolerance should be decreased from 135 to 125 ppm. Therefore, EPA is proposing to decrease the tolerances in 40 CFR 180.111(a)(1) for alfalfa, forage; clover, forage; trefoil, forage; and clover, hay; each to 125 ppm; and redesignate them to 40 CFR 180.111(a)(2).

Based on its use pattern and available storage stability data that showed malathion residues of concern in or on carrots were as high as 0.54 ppm, EPA determined that the tolerance should be decreased from 8 to 1 ppm. Therefore, EPA is proposing to decrease the tolerance in 40 CFR 180.111(a)(1) for carrot, roots to 1 ppm, and redesignate it to 40 CFR 180.111(a)(2).

Based on their use patterns and available field trial data that showed malathion residues of concern in or on mango were as high as <0.12 ppm, passionfruit were as high as <0.12 ppm, pineapple were as high as 0.17 ppm, and walnuts were non-detectable (<0.10 ppm), EPA determined that the tolerances should each be decreased from 8 to 0.2 ppm. Also, based on their use patterns and the translation of walnut data to pecan, EPA determined that the pecan tolerance should be decreased from 8 to 0.2 ppm. Therefore, EPA is proposing to decrease the tolerances in 40 CFR 180.111(a)(1) for mango, passionfruit, pecan, pineapple, and walnut, each to 0.2 ppm, and redesignate them to 40 CFR 180.111(a)(2).

Based on their use patterns and available field trial data that showed malathion residues of concern in or on oranges as high as 1.91 ppm, and translation of that data to grapefruit, kumquat, lemon, lime, and tangerine, EPA determined that the tolerances should be decreased from 8 to 4.0 ppm for orange, grapefruit, kumquat, lemon, lime, and tangerine. Therefore, EPA is proposing to decrease the tolerances in 40 CFR 180.111(a)(1) for orange, grapefruit, kumquat, lemon, lime, and tangerine; each to 4.0 ppm, and redesignate them to 40 CFR 180.111(a)(2).

Based on their use patterns and dry bean data, which showed malathion residues of concern as high as 0.74 ppm, and translation of that data to lupin seed, EPA determined that the tolerance for lupin seed should be decreased from 8 to 2.0 ppm. Therefore, EPA is proposing to decrease the tolerance in 40 CFR 180.111(a)(1) for lupin, seed to 2.0 ppm, and redesignate it to 40 CFR 180.111(a)(2).

Based on its use pattern and available field trial data that showed malathion residues of concern in or on peppers as high as 0.09 ppm, EPA determined that the tolerance should be decreased from 8 to 0.5 ppm. Therefore, EPA is proposing to decrease the tolerance in 40 CFR 180.111(a)(1) for pepper to 0.5 ppm, and redesignate it to 40 CFR 180.111(a)(2).

6. *Mancozeb.* Based on label revisions and available field trial data that showed mancozeb residues as high as 0.738 ppm in or on wheat grain and 27.1 ppm in or on wheat straw, the Agency determined that the tolerances should be set at 1 ppm for wheat grain and 30 ppm for wheat straw, which when converted to carbon disulfide equivalents using a rounded conversion factor of 0.6X (based on relative molecular weights) is calculated as 0.6 ppm for grain and 18 ppm for straw. The Agency determined that data for wheat should be translated to barley, oat, and rye because of similar use patterns. In order to harmonize with Codex, EPA is proposing in 40 CFR 180.176(a) to decrease the tolerances on barley, grain; oat, grain; rye, grain; and wheat, grain; each to 1 ppm and to maintain the tolerance for wheat, straw at 25 ppm (as recommended in the RED) and therefore, also maintain the straw tolerances at 25 ppm for barley, oat, and rye.

Based on available processing data that showed mancozeb residues concentrated 2X in flour and 4X in wheat bran and shorts, and a highest average field trial (HAFT) of <0.748 ppm on the raw agricultural commodity (RAC), the Agency expected residues as high as 1.5 ppm for flour and 2.99 ppm for bran, and the Agency determined that the tolerances should be set at 2.0 ppm for flour and 3.0 ppm for bran and shorts, which when converted to carbon disulfide equivalents using a rounded conversion factor of 0.6X is calculated as 1.2 ppm for flour and 2 ppm for bran and shorts. The Agency determined that data for wheat should be translated to barley, oat, and rye because of similar use patterns. Therefore, EPA is proposing in 40 CFR 180.176(a) to decrease the tolerances on wheat, flour; barley, flour; and oat, flour; each to 1.2 ppm and also to establish a tolerance on rye, flour at 1.2 ppm; and decrease the tolerances on wheat, bran; barley, bran; rye, bran; and wheat, shorts; each to 2 ppm.

Based on sufficient data for wheat hay, where the field trial data showed mancozeb residues as high as 46.4 ppm, the Agency determined that the tolerance, in carbon disulfide equivalents, should be set at 30 ppm. No additional data for wheat hay have been received since the RED that would change that conclusion. (Although the Mancozeb RED stated that additional data for wheat hay were needed to establish a tolerance value, the Agency had received sufficient data prior to the RED to establish a tolerance value and no additional data are needed). The Agency determined that data for wheat hay should be translated to barley and oats because of similar use patterns. Therefore, EPA is proposing to establish tolerances in 40 CFR 180.176(a) on wheat, hay; barley hay; and oat, hay at 30 ppm.

Based on label revision and available field trial data that showed mancozeb residues were as high as 12.6 ppm in or on papaya, the Agency determined that the tolerance should be set at 15 ppm, which when converted to carbon disulfide equivalents using a rounded conversion factor of 0.6X is calculated as 9 ppm. Therefore, EPA is proposing to decrease the tolerance in 40 CFR 180.176(a) on papaya to 9 ppm.

Based on available field trial data that showed mancozeb residues were not detectable (<0.05 ppm) in or on field corn grain, the Agency determined that the tolerance should be set at 0.1 ppm, which when converted to carbon disulfide equivalents using a rounded conversion factor of 0.6X is calculated as 0.06 ppm. Therefore, EPA is proposing to decrease the tolerance in 40 CFR 180.176(a) on corn, field, grain to 0.06 ppm.

7. *Mepiquat.* Based on available data at an exaggerated feeding level of 7X the Maximum Theoretical Dietary Burden (MTDB) which showed mepiquat residues of concern in cattle meat, fat, and milk were below the limit of detection (<0.05 ppm), EPA determined that there is no reasonable expectation of finite mepiquat residues of concern in livestock meat and fat. The tolerances

are no longer needed under 40 CFR 180.6(a)(3) and therefore should be revoked. Consequently, EPA is proposing to revoke the tolerances for mepiquat chloride in 40 CFR 180.384(a)(2) on cattle, fat; cattle, meat; goat, fat; goat, meat; hog, fat; hog, meat; horse, fat; horse, meat; sheep, fat; and sheep, meat.

In addition, EPA is proposing to combine the tolerance expressions for mepiquat in 40 CFR 180.384(a)(1) and mepiquat chloride in 40 CFR 180.384(a)(2) by measuring only mepiquat in newly designated 40 CFR 180.384(a). Also, in order to describe more clearly the measurement of residues for tolerances and coverage of metabolites and degradates of a pesticide by the tolerances, EPA is proposing to revise the introductory text in newly designated 40 CFR 180.384(a) to read as set out in the proposed regulatory text at the end of this document.

8. *Oxamyl.* In the **Federal Register** of January 11, 2012 (77 FR 1684) (FRL–9328–2), EPA announced its receipt of voluntary requests by registrants to amend certain pesticide registrations, including amendments to terminate the last oxamyl registrations for soybean use. In the **Federal Register** of April 11, 2012 (77 FR 21767) (FRL–9342–2), EPA published a cancellation order in follow-up to the January 11, 2012 notice and granted the requested amendments to terminate use of oxamyl on soybeans. Because the soybean use has not been included on oxamyl product labels since 2006, no existing stocks period is needed. Therefore, EPA is proposing to revoke the tolerance for oxamyl in 40 CFR 180.303(a) on soybean, seed.

9. *Propetamphos.* In the **Federal Register** of August 18, 2010 (75 FR 51053) (FRL–8840–3), EPA announced its receipt of voluntary requests by the registrant to cancel certain propetamphos registrations, which would terminate the last propetamphos products registered for use in the United States. In the **Federal Register** of December 30, 2010 (75 FR 82387) (FRL–8854–8), EPA published a cancellation order in follow-up to the August 18, 2010 notice which granted the requested product cancellations and prohibited the registrant from selling or distributing its propetamphos technical product after March 30, 2012 and end-use product until stocks are exhausted as described. Persons other than the registrant are allowed to sell, distribute, and use existing stocks of the end-use product until supplies are exhausted. EPA believes that existing stocks have been exhausted. Therefore, EPA is proposing to revoke the sole tolerance for propetamphos in 40 CFR 180.541, on food and feed commodities, and remove that section in its entirety.

10. *Quizalofop ethyl.* Because EPA no longer considers soybean soapstock to be a significant livestock feed item, the tolerance for quizalofop ethyl residues of concern is no longer needed and therefore should be revoked. Consequently, EPA is proposing to revoke the tolerance for quizalofop ethyl in 40 CFR 180.441(a)(1) on soybean, soapstock.

11. *Spinosad.* The existing tolerance for spinosad on coriander leaves was translated from the tolerance for vegetable, leafy, except brassica, group 4 at 8.0 ppm. The 2009 Calendar Year Pesticide Data Program (PDP) summary, available at *http://www.ams.usda.gov/AMSv1.0/science,* reported that spinosad residues were detected in two cilantro samples out of 184 samples. Residues ranged from 0.016 to 0.030 ppm. Because fresh coriander leaves are included in herb subgroup 19A, fresh and residues on coriander leaves do not exceed the herb subgroup 19A, fresh tolerance of 3.0 ppm, there is no longer any need for the separate tolerance on coriander leaves at 8.0 and therefore it should be revoked. Consequently, EPA is proposing to revoke the tolerance for spinosad in 40 CFR 180.495(a) on coriander, leaves.

12. *Spiroxamine.* In the **Federal Register** of September 7, 2011 (76 FR 55385) (FRL–8887–1), EPA announced its receipt of voluntary requests by registrants to cancel certain pesticide registrations, including the last registrations for use of spiroxamine on hops. In the **Federal Register** of May 23, 2012 (77 FR 30526) (FRL–9347–3), EPA published a cancellation order in follow-up to the September 7, 2011 notice and granted the requested product cancellations, including ones which terminated use of spiroxamine on hops. The cancellation order allowed registrants to sell and distribute existing stocks until May 23, 2013. EPA believes that existing stocks (with hops use) will be exhausted 1 year after May 23, 2013; i.e., by May 23, 2014. Therefore, EPA is proposing to revoke the tolerance for spiroxamine in 40 CFR 180.602(a) on hop, dried cones.

13. *Thiram.* Currently, tolerances for thiram are established in 40 CFR 180.132(a) for residues of the fungicide thiram (tetramethyl thiuram disulfide). Thiram is a member of the class of dithiocarbamates, whose decomposition releases a common moiety, carbon disulfide. In order to allow harmonization of U.S. tolerances with Codex MRLs, the Agency determined that for the purpose of tolerance enforcement, residues of thiram should be calculated as carbon disulfide. Therefore, EPA is proposing to revise the introductory text containing the tolerance expression in 40 CFR 180.132(a) to thiram residues convertible to and expressed in terms of the degradate carbon disulfide and also revise the tolerance expression in accordance with current Agency practice to describe more clearly the measurement and scope or coverage of the tolerances, to read as set out in the proposed regulatory text at the end of this document. Based on the revising of the tolerance expression to carbon disulfide, EPA determined that the thiram tolerances for apple and strawberry should be decreased from 7.0 to 5 ppm and 20 to 13 ppm, respectively, and the tolerance for banana should be increased from 0.80 to 2.0 ppm in order to harmonize with Codex. Also, in order to harmonize with Codex, EPA is maintaining the tolerance for peach at 7.0 ppm. (The Agency's determination is available in the docket of this proposed rule). Therefore, EPA is proposing in 40 CFR 180.132(a) to decrease the tolerances for apple to 5 ppm and strawberry to 13 ppm, and increase the tolerance for banana to 2.0 ppm. The Agency determined that the increased tolerance is safe; i.e., there is a reasonable certainty that no harm will result from aggregate exposure to the pesticide chemical residue.

14. *Triflumizole.* Because EPA no longer considers dry apple pomace, grape pomace, and grape raisin waste to be significant livestock feed items, the associated tolerances for triflumizole residues of concern are no longer needed and therefore should be revoked. Also, based on apple processing data that showed triflumizole residues of concern do not concentrate in wet apple pomace, the tolerance is no longer needed and should be revoked. Consequently, EPA is proposing to revoke the tolerances for triflumizole in 40 CFR 180.476(a)(1) on apple, dry pomace; apple, wet pomace; grape, dried pomace; grape, raisin, waste; and grape, wet pomace.

Also, because there are no longer any registered triflumizole uses associated with feed items for poultry and swine, tolerances for triflumizole residues of concern on swine and poultry are no longer needed and therefore should be revoked. Consequently, EPA is proposing to revoke the tolerances for triflumizole in 40 CFR 180.476(a)(2) on hog, fat; hog, meat; hog, meat byproducts; poultry, fat; poultry, meat; poultry, meat byproducts; and egg.

Based on available data at an exaggerated feeding level of 6X the

MTDB which showed triflumizole residues of concern to be below the limit of quantitation (<0.05 ppm) and projected residues at 1X the MTDB in cattle meat and milk to be well below the limit of quantitation (<0.05 ppm), EPA determined that there is no reasonable expectation of finite triflumizole residues of concern in livestock meat and milk. These tolerances are no longer needed under 40 CFR 180.6(a)(3) and therefore should be revoked. Consequently, EPA is proposing to revoke the tolerances for triflumizole in 40 CFR 180.476(a)(2) on cattle, meat; goat, meat; horse, meat; sheep, meat; and milk.

In addition, based on available data at an exaggerated feeding level at 6X the MTDB which projected residues at 1X the MTDB in cattle fat, kidney, and liver to be <0.05 ppm, <0.10 ppm, and <0.10 ppm, respectively, EPA determined that the existing tolerances should be decreased. Consequently, EPA is proposing to decrease the tolerances for triflumizole in 40 CFR 180.476(a)(2) from 0.5 to 0.10 ppm on cattle, fat; goat, fat; horse, fat; and sheep, fat; and from 0.5 to 0.20 ppm on cattle, meat byproducts; goat, meat byproducts; horse, meat byproducts; and sheep, meat byproducts.

B. What is the agency's authority for taking this action?

A ''tolerance'' represents the maximum level for residues of pesticide chemicals legally allowed in or on raw agricultural commodities and processed foods. Section 408 of FFDCA, 21 U.S.C. 346a, authorizes the establishment of tolerances, exemptions from tolerance requirements, modifications in tolerances, and revocation of tolerances for residues of pesticide chemicals in or on raw agricultural commodities and processed foods. Without a tolerance or exemption, food containing pesticide residues is considered to be unsafe and therefore ''adulterated'' under FFDCA section 402(a), 21 U.S.C. 342(a). Such food may not be distributed in interstate commerce, 21 U.S.C. 331(a). For a food-use pesticide to be sold and distributed, the pesticide must not only have appropriate tolerances under the FFDCA, but also must be registered under FIFRA, 7 U.S.C. 136 *et seq.* Food-use pesticides not registered in the United States must have tolerances in order for commodities treated with those pesticides to be imported into the United States.

EPA is proposing certain specific tolerance actions to implement the tolerance recommendations made during the reregistration and tolerance reassessment processes (including follow-up on canceled or additional uses of pesticides). As part of these processes, EPA is required to determine whether each of the amended tolerances meets the safety standard of FFDCA. The safety finding determination is discussed in detail in each RED for the active ingredient. REDs recommend the implementation of certain tolerance actions, including modifications to reflect current use patterns, to meet safety findings, and change commodity names and groupings in accordance with new EPA policy. Printed and electronic copies of the REDs are available as provided in Unit II.A.

EPA has issued REDs for malathion and mancozeb. REDs contain the Agency's evaluation of the database for these pesticides, including requirements for additional data on the active ingredients to confirm the potential human health and environmental risk assessments associated with current product uses, and in REDs state conditions under which these uses and products will be eligible for reregistration. The REDs recommended the establishment, modification, and/or revocation of specific tolerances. RED and TRED recommendations such as establishing or modifying tolerances, and in some cases revoking tolerances, are the result of assessment under the FFDCA standard of ''reasonable certainty of no harm.'' However, tolerance revocations recommended in REDs that are proposed in this document do not need such assessment when the tolerances are no longer necessary.

EPA's general practice is to propose revocation of tolerances for residues of pesticide active ingredients on crops for which FIFRA registrations no longer exist and on which the pesticide may therefore no longer be used in the United States. EPA has historically been concerned that retention of tolerances that are not necessary to cover residues in or on legally treated foods may encourage misuse of pesticides within the United States. Nonetheless, EPA will establish and maintain tolerances even when corresponding domestic uses are canceled if the tolerances, which EPA refers to as ''import tolerances,'' are necessary to allow importation into the United States of food containing such pesticide residues. However, where there are no imported commodities that require these import tolerances, the Agency believes it is appropriate to revoke tolerances for unregistered pesticides in order to prevent potential misuse.

Furthermore, as a general matter, the Agency believes that retention of import tolerances not needed to cover any imported food may result in unnecessary restriction on trade of pesticides and foods. Under FFDCA section 408, a tolerance may only be established or maintained if EPA determines that the tolerance is safe based on a number of factors, including an assessment of the aggregate exposure to the pesticide and an assessment of the cumulative effects of such pesticide and other substances that have a common mechanism of toxicity. In doing so, EPA must consider potential contributions to such exposure from all tolerances. If the cumulative risk is such that the tolerances in aggregate are not safe, then every one of these tolerances is potentially vulnerable to revocation. Furthermore, if unneeded tolerances are included in the aggregate and cumulative risk assessments, the estimated exposure to the pesticide would be inflated. Consequently, it may be more difficult for others to obtain needed tolerances or to register needed new uses. To avoid potential trade restrictions, the Agency is proposing to revoke tolerances for residues on crops uses for which FIFRA registrations no longer exist, unless someone expresses a need for such tolerances. Through this proposed rule, the Agency is inviting individuals who need these import tolerances to identify themselves and the tolerances that are needed to cover imported commodities.

Parties interested in retention of the tolerances should be aware that additional data may be needed to support retention. These parties should be aware that, under FFDCA section 408(f), if the Agency determines that additional information is reasonably required to support the continuation of a tolerance, EPA may require that parties interested in maintaining the tolerances provide the necessary information. If the requisite information is not submitted, EPA may issue an order revoking the tolerance at issue.

When EPA establishes tolerances for pesticide residues in or on raw agricultural commodities, consideration must be given to the possible residues of those chemicals in meat, milk, poultry, and/or eggs produced by animals that are fed agricultural products (for example, grain or hay) containing pesticides residues (40 CFR 180.6). When considering this possibility, EPA can conclude that:

1. Finite residues will exist in meat, milk, poultry, and/or eggs.

2. There is a reasonable expectation that finite residues will exist.

3. There is a reasonable expectation that finite residues will not exist. If there is no reasonable expectation of finite pesticide residues in or on meat,

milk, poultry, or eggs, tolerances do not need to be established for these commodities (40 CFR 180.6(b) and (c)).

EPA has evaluated certain specific meat, milk, poultry, and egg tolerances proposed for revocation in this document and has concluded that there is no reasonable expectation of finite pesticide residues of concern in or on those commodities.

C. When do these actions become effective?

EPA is proposing that the actions herein become effective 6 months after the date of publication of the final rule in the **Federal Register**. EPA is proposing this effective date for these actions to allow a reasonable interval for producers in exporting members of the World Trade Organization's (WTO's) Sanitary and Phytosanitary (SPS) Measures Agreement to adapt to the requirements of a final rule. EPA believes that treated commodities will have sufficient time for passage through the channels of trade. If you have comments regarding existing stocks and whether the effective date allows sufficient time for treated commodities to clear the channels of trade, please submit comments as described under **SUPPLEMENTARY INFORMATION**.

Any commodities listed in this proposal treated with the pesticides subject to this proposal, and in the channels of trade following the tolerance revocations, shall be subject to FFDCA section 408(1)(5), as established by the Food Quality Protection Act (FQPA). Under this unit, any residues of these pesticides in or on such food shall not render the food adulterated so long as it is shown to the satisfaction of the Food and Drug Administration that:

1. The residue is present as the result of an application or use of the pesticide at a time and in a manner that was lawful under FIFRA, and

2. The residue does not exceed the level that was authorized at the time of the application or use to be present on the food under a tolerance or exemption from tolerance. Evidence to show that food was lawfully treated may include records that verify the dates when the pesticide was applied to such food.

III. International Residue Limits

In making its tolerance decisions, EPA seeks to harmonize U.S. tolerances with international standards whenever possible, consistent with U.S. food safety standards and agricultural practices. EPA considers the international maximum residue limits (MRLs) established by the Codex Alimentarius Commission (Codex), as required by FFDCA section 408(b)(4). The Codex Alimentarius is a joint United Nations Food and Agriculture Organization/World Health Organization food standards program, and it is recognized as an international food safety standards-setting organization in trade agreements to which the United States is a party. EPA may establish a tolerance that is different from a Codex MRL; however, FFDCA section 408(b)(4) requires that EPA explain the reasons for departing from the Codex level.

The Codex has not established a MRL for carfentrazone-ethyl, mepiquat, propetamphos, quizalofop ethyl, spiroxamine, triflumizole, ethephon in or on cucumber, oxamyl in or on soybean seed, spinosad in or on coriander leaves, or total dithiocarbamates in or on barley bran, barley flour, field corn grain, oat flour, oat grain, rye bran, rye grain, wheat bran, wheat flour, and wheat, shorts.

The Codex has established MRLs for total dithiocarbamates determined as carbon disulfide in or on various commodities, including barley and wheat, each at 1 milligrams/kilogram (mg/kg). These MRLs are the same as the tolerances proposed for mancozeb in the United States.

The Codex has established MRLs for total dithiocarbamates determined as carbon disulfide in or on various commodities, including papaya at 5 mg/kg. This MRL is covered by a proposed U.S. tolerance at a higher level than the MRL. The MRL is different than the proposed U.S. tolerance for mancozeb in the United States because of differences in residue definition, use patterns, and/or good agricultural practices.

The Codex has established MRLs for malathion in or on various commodities, including onion, bulb at 1 milligrams/kilogram (mg/kg). This MRL is the same as the tolerance proposed for malathion in the United States.

The Codex has established MRLs for malathion in or on various commodities, including asparagus at 1 mg/kg and peppers at 0.1 mg/kg. These MRLs are covered by proposed U.S. tolerances at higher levels than the MRLs. These MRLs are different than the tolerances established for malathion in the United States because of differences in residue definition, use patterns, and/or good agricultural practices.

The Codex has established MRLs for malathion in or on citrus fruits at 7 mg/kg, grapes at 5 mg/kg, and turnip greens at 5 mg/kg. These MRLs are different than the tolerances proposed for malathion in the United States because of differences in residue definition, use patterns, and/or good agricultural practices.

The Codex has established a MRL for amitraz in or on various commodities, including cotton seed at 0.5 mg/kg. This MRL is covered by the current U.S. tolerance at a higher level than the MRL, but would no longer be covered due to the proposed revocation of the U.S. tolerance.

The Codex has established MRLs for total dithiocarbamates determined as carbon disulfide in or on various commodities, including banana at 2 mg/kg, peach at 7 mg/kg, and strawberry at 5 mg/kg. The MRLs for banana and peach are the same as the U.S. tolerances proposed for thiram in the United States. The MRL for strawberry is covered by a proposed U.S. tolerance at a higher level than the MRL. The MRL for strawberry is different than the tolerance proposed for thiram in the United States because of differences in use patterns, and/or good agricultural practices.

IV. Statutory and Executive Order Reviews

In this proposed rule, EPA is proposing to establish tolerances under FFDCA section 408(e), and also modify and revoke specific tolerances established under FFDCA section 408. The Office of Management and Budget (OMB) has exempted these types of actions (e.g., establishment and modification of a tolerance and tolerance revocation for which extraordinary circumstances do not exist) from review under Executive Order 12866, entitled ''*Regulatory Planning and Review*'' (58 FR 51735, October 4, 1993). Because this proposed rule has been exempted from review under Executive Order 12866 due to its lack of significance, this proposed rule is not subject to Executive Order 13211, entitled ''*Actions Concerning Regulations That Significantly Affect Energy Supply, Distribution, or Use*'' (66 FR 28355, May 22, 2001). This proposed rule does not contain any information collections subject to OMB approval under the Paperwork Reduction Act (PRA) (44 U.S.C. 3501 *et seq.*), or impose any enforceable duty or contain any unfunded mandate as described under Title II of the Unfunded Mandates Reform Act of 1995 (UMRA) (2 U.S.C. 1501 *et seq.*). Nor does it require any special considerations as required by Executive Order 12898, entitled ''*Federal Actions to Address Environmental Justice in Minority Populations and Low-Income Populations*'' (59 FR 7629, February 16, 1994); or OMB review or any other Agency action under Executive Order

13045, entitled ''*Protection of Children from Environmental Health Risks and Safety Risks''* (62 FR 19885, April 23, 1997). This action does not involve any technical standards that would require Agency consideration of voluntary consensus standards pursuant to section 12(d) of the National Technology Transfer and Advancement Act of 1995 (NTTAA) (15 U.S.C. 272 note). Pursuant to the Regulatory Flexibility Act (RFA) (5 U.S.C. 601 *et seq.*), the Agency previously assessed whether establishment of tolerances, exemptions from tolerances, raising of tolerance levels, expansion of exemptions, or revocations might significantly impact a substantial number of small entities and concluded that, as a general matter, these actions do not impose a significant economic impact on a substantial number of small entities. These analyses for tolerance establishments and modifications, and for tolerance revocations were published on May 4, 1981 (46 FR 24950) and on December 17, 1997 (62 FR 66020) (FRL–5753–1), respectively, and were provided to the Chief Counsel for Advocacy of the Small Business Administration. Taking into account this analysis, and available information concerning the pesticides listed in this proposed rule, the Agency hereby certifies that this proposed rule will not have a significant negative economic impact on a substantial number of small entities. In a memorandum dated May 25, 2001, EPA determined that eight conditions must all be satisfied in order for an import tolerance or tolerance exemption revocation to adversely affect a significant number of small entity importers, and that there is a negligible joint probability of all eight conditions holding simultaneously with respect to any particular revocation. (This Agency document is available in the docket of this proposed rule). Furthermore, for the pesticide named in this proposed rule, the Agency knows of no extraordinary circumstances that exist as to the present proposal that would change the EPA's previous analysis. Any comments about the Agency's determination should be submitted to the EPA along with comments on the proposal, and will be addressed prior to issuing a final rule. In addition, the Agency has determined that this action will not have a substantial direct effect on States, on the relationship between the national government and the States, or on the distribution of power and responsibilities among the various levels of government, as specified in Executive Order 13132, entitled ''*Federalism''* (64 FR 43255, August 10, 1999). Executive Order 13132 requires EPA to develop an accountable process to ensure ''meaningful and timely input by State and local officials in the development of regulatory policies that have federalism implications.'' ''Policies that have federalism implications'' is defined in the Executive order to include regulations that have ''substantial direct effects on the States, on the relationship between the national government and the States, or on the distribution of power and responsibilities among the various levels of government.'' This proposed rule directly regulates growers, food processors, food handlers, and food retailers, not States. This action does not alter the relationships or distribution of power and responsibilities established by Congress in the preemption provisions of FFDCA section 408(n)(4). For these same reasons, the Agency has determined that this proposed rule does not have any ''tribal implications'' as described in Executive Order 13175, entitled *''Consultation and Coordination with Indian Tribal Governments''* (65 FR 67249, November 9, 2000). Executive Order 13175, requires EPA to develop an accountable process to ensure ''meaningful and timely input by tribal officials in the development of regulatory policies that have tribal implications.'' ''Policies that have tribal implications'' is defined in the Executive order to include regulations that have ''substantial direct effects on one or more Indian tribes, on the relationship between the Federal Government and the Indian tribes, or on the distribution of power and responsibilities between the Federal Government and Indian tribes.'' This proposed rule will not have substantial direct effects on tribal governments, on the relationship between the Federal Government and Indian tribes, or on the distribution of power and responsibilities between the Federal Government and Indian tribes, as specified in Executive Order 13175. Thus, Executive Order 13175 does not apply to this proposed rule.

List of Subjects in 40 CFR Part 180

Environmental protection, Administrative practice and procedure, Agricultural commodities, Pesticides and pests, Reporting and recordkeeping requirements.

Dated: June 24, 2014.

Jack Housenger,

Director, Office of Pesticide Programs.

Therefore, it is proposed that 40 CFR chapter I be amended as follows:

PART 180—[AMENDED]

■ 1. The authority citation for part 180 continues to read as follows:

Authority: 21 U.S.C. 321(q), 346a and 371.

■ 2. In § 180.111, revise the table in paragraph (a)(1) and revise paragraph (a)(2) to read as follows:

§ 180.111 Malathion; tolerances for residues.

(a) * * *

(1) * * *

Commodity	Parts per million
Alfalfa, hay	135
Almond, hulls	50
Almond, postharvest	8
Apple	8
Barley, grain, postharvest	8
Bean, dry, seed	8
Bean, succulent	8
Beet, sugar, roots	1
Beet, sugar, tops	8
Blueberry	8
Cherry	8
Chestnut	1
Corn, field, forage	8
Corn, field, grain, postharvest	8
Corn, pop, grain, postharvest	8
Corn, sweet, forage	8
Corn, sweet, kernel plus cob with husks removed	2
Cowpea, forage	135
Cowpea, hay	135
Cranberry	8
Cucumber	8
Currant	8
Date, dried fruit	8
Flax, seed	0.1
Guava	8
Hazelnut	1
Hop, dried cones	1
Lentil, seed	8
Lespedeza, hay	135
Oat, grain, postharvest	8
Papaya	1
Pea	8
Pea, field, hay	8
Pea, field, vines	8
Peanut, hay	135
Peanut, postharvest	8
Plum	8
Plum, prune	8
Quince	8
Rice, grain, postharvest	8
Rice, wild	8
Rye, grain, postharvest	8
Safflower, seed	0.2
Sorghum, grain, forage	8
Sorghum, grain, grain, postharvest	8
Soybean, forage	135
Soybean, hay	135
Soybean, seed	8
Soybean, vegetable, succulent	8
Strawberry	8
Sunflower, seed, postharvest	8
Tomato	8
Trefoil, hay	135
Vegetable, brassica, leafy, group 5	8

Commodity	Parts per million
Vegetable, leafy, except brassica, group 4	8
Vetch, hay	135
Wheat, grain, postharvest	8

(2) Tolerances are established for residues of the insecticide malathion, including its metabolites and degradates, in or on the commodities in the table in this paragraph. Compliance with the tolerance levels specified in this paragraph is to be determined by measuring only the sum of malathion (*O,O*-dimethyl dithiophosphate of diethyl mercaptosuccinate), and its metabolite malaoxon (*O,O*-dimethyl thiophosphate of diethyl mercaptosuccinate), in or on the commodity.

Commodity	Parts per million
Alfalfa, forage	125
Apricot	1.0
Asparagus	2.0
Avocado	0.2
Barley, straw	50
Beet, garden, roots	0.5
Beet, garden, tops	4.0
Blackberry	6
Boysenberry	6
Carrot, roots	1
Chayote, fruit	0.2
Chayote, roots	0.1
Clover, forage	125
Clover, hay	125
Corn, field, stover	30.0
Cotton, undelinted seed	20.0
Dewberry	6
Eggplant	2.0
Fig	1.0
Garlic, bulb	1.0
Gooseberry	6
Grape	4.0
Grapefruit	4.0
Grass, forage	200
Grass, hay	270
Horseradish	0.5
Kumquat	4.0
Leek	6.0
Lemon	4.0
Lime	4.0
Loganberry	6
Lupin, seed	2.0
Mango	0.2
Melon	1.0
Mushroom	0.2
Nectarine	1.0
Nut, macadamia	0.2
Oat, forage	4.0
Oat, straw	50
Okra	3.0
Onion, bulb	1.0
Onion, green	6.0
Orange	4.0
Parsnip	0.5
Passionfruit	0.2
Peach	6.0
Pear	3.0
Pecan	0.2
Pepper	0.5
Peppermint, tops	2.0
Pineapple	0.2
Potato	0.1
Pumpkin	1.0
Radish	0.5
Raspberry	6
Rutabaga	0.5
Rye, forage	4.0
Rye, straw	50
Salsify, roots	0.5
Salsify, tops	4.0
Shallot, bulb	6.0
Spearmint, tops	2.0
Squash, summer	0.2
Squash, winter	1.0
Sweet potato, roots	0.1
Tangerine	4.0
Trefoil, forage	125
Turnip, greens	4.0
Turnip, roots	0.5
Walnut	0.2
Watercress	0.2
Wheat, forage	4.0
Wheat, straw	50

* * * * *

■ 3. In § 180.132, revise paragraph (a) to read as follows:

§ 180.132 Thiram; tolerances for residues.

(a) *General.* Tolerances are established for residues of the fungicide thiram, tetramethyl thiuram disulfide, including its metabolites and degradates, in or on the commodities in the table in this paragraph. Compliance with the tolerance levels specified in this paragraph is to be determined by measuring only those thiram residues convertible to and expressed in terms of the degradate carbon disulfide, in or on the commodity.

Commodity	Parts per million	Expiration/revocation date
Apple	5	None
Banana [1]	2.0	3/31/15
Peach	7.0	None
Strawberry	13	None

[1] There are no U.S. registrations as of September 23, 2009.

* * * * *

§ 180.142 [Amended]

■ 4. In § 180.142, remove the entry for ''Rice, straw'' from the table in paragraph (a).

§ 180.169 [Amended]

■ 5. In § 180.169, remove the entry for ''Rice, straw'' from the table in paragraph (a)(1).

■ 6. In § 180.176, revise the table in paragraph (a) to read as follows:

§ 180.176 Mancozeb; tolerances for residues.

(a) * * *

Commodity	Parts per million
Almond	0.1
Almond, hulls	4
Apple	0.6
Asparagus	0.1
Atemoya	3.0
Banana	2
Barley, bran	2
Barley, flour	1.2
Barley, grain	1
Barley, hay	30
Barley, pearled barley	20
Barley, straw	25
Beet, sugar, dried pulp	3.0
Beet, sugar, roots	1.2
Beet, sugar, tops	60
Broccoli	7
Cabbage	9
Canistel	15.0
Cattle, kidney	0.5
Cattle, liver	0.5
Cherimoya	3.0
Corn, field, forage	40
Corn, field, grain	0.06
Corn, field, stover	15
Corn, pop, grain	0.1
Corn, pop, stover	40
Corn, sweet, forage	70
Corn, sweet, kernel plus cob with husks removed	0.1
Corn, sweet, stover	40
Cotton, undelinted seed	0.5
Crabapple	0.6
Cranberry	5
Custard apple	3.0
Fennel	2.5
Flax, seed	0.15
Ginseng	1.2
Goat, kidney	0.5
Goat, liver	0.5
Grape	1.5
Hog, kidney	0.5
Hog, liver	0.5
Horse, kidney	0.5
Horse, liver	0.5
Lettuce, head	3.5
Lettuce, leaf	18
Mango	15.0
Oat, flour	1.2
Oat, grain	1
Oat, groats/rolled oats	20
Oat, hay	30
Oat, straw	25
Onion, bulb	1.5
Papaya	9
Peanut	0.1
Peanut, hay	65
Pear	0.6
Pepper	12
Potato	0.2
Poultry, kidney	0.5
Poultry, liver	0.5
Quince	0.6
Rice, grain	0.06
Rye, bran	2
Rye, flour	1.2
Rye, grain	1
Rye, straw	25
Sapodilla	15.0
Sapote, mamey	15.0
Sapote, white	15.0
Sheep, kidney	0.5
Sheep, liver	0.5
Sorghum, grain, forage	0.15

Commodity	Parts per million
Sorghum, grain, grain	0.25
Sorghum, grain, stover	0.15
Star apple	15.0
Sugar apple	3.0
Tangerine [1]	10
Tomato	2.5
Vegetable, cucurbit, group 9	2.0
Walnut	0.70
Wheat, bran	2
Wheat, flour	1.2
Wheat, germ	20
Wheat, grain	1
Wheat, hay	30
Wheat, middlings	20
Wheat, shorts	2
Wheat, straw	25

[1] There are no U.S. registrations for use of mancozeb on tangerine.

* * * * *

§ 180.205 [Amended]

■ 7. In § 180.205, remove the entry for ''Rice, straw'' from the table in paragraph (a).

§ 180.274 [Amended]

■ 8. In § 180.274, remove the entry for ''Rice, straw'' from the table in paragraph (a).

§ 180.287 [Amended]

■ 9. In § 180.287, remove the entry for ''Cotton, undelinted seed [1]'' and the footnote from the table in paragraph (a).

§ 180.288 [Amended]

■ 10. In § 180.288, remove the entry for ''Rice, straw'' from the table in paragraph (a).

§ 180.293 [Amended]

■ 11. In § 180.293, remove the entry for ''Rice, straw'' from the table in paragraph (a)(1).

§ 180.300 [Amended]

■ 12. In § 180.300, remove the entry for ''Cucumber'' from the table in paragraph (a).

§ 180.301 [Amended]

■ 13. In § 180.301, remove the entry for ''Rice, straw'' from the table in paragraph (a).

§ 180.303 [Amended]

■ 14. In § 180.303, remove the entry for ''Soybean, seed'' from the table in paragraph (a).

§ 180.355 [Amended]

■ 15. In § 180.355, remove the entry for ''Rice, straw'' from the table in paragraph (a)(1).

§ 180.361 [Amended]

■ 16. In § 180.361, remove the entry for ''Rice, straw'' from the table in paragraph (a).

§ 180.377 [Amended]

■ 17. In § 180.377, remove the entry for ''Rice, straw'' from the table in paragraph (a)(2).

§ 180.383 [Amended]

■ 18. In § 180.383, remove the entry for ''Rice, straw'' from the table in paragraph (a).

■ 19. In § 180.384, revise paragraph (a) to read as follows:

§ 180.384 Mepiquat (N,N-dimethylpiperidinium); tolerances for residues.

(a) *General.* Tolerances are established for residues of the plant growth regulator mepiquat, including its metabolites and degradates, in or on the commodities in the table in this paragraph. Compliance with the tolerance levels specified in this paragraph is to be determined by measuring only mepiquat, *N,N*-dimethylpiperidinium, in or on the commodity.

Commodity	Parts per million
Cattle, meat byproducts	0.1
Cotton, gin byproducts	6.0
Cotton, undelinted seed	2.0
Goat, meat byproducts	0.1
Grape	1.0
Grape, raisin	5.0
Hog, meat byproducts	0.1
Horse, meat byproducts	0.1
Sheep, meat byproducts	0.1

* * * * *

§ 180.399 [Amended]

■ 20. In § 180.399, remove the entry for ''Rice, straw'' from the table in paragraph (a)(1).

§ 180.401 [Amended]

■ 21. In § 180.401, remove the entry for ''Rice, straw'' from the table in paragraph (a).

§ 180.417 [Amended]

■ 22. In § 180.417, remove the entry for ''Rice, straw'' from the table in paragraph (a)(1).

§ 180.418 [Amended]

■ 23. In § 180.418, remove the entry for ''Rice, straw'' from the table in paragraph (a)(2).

§ 180.425 [Amended]

■ 24. In § 180.425, remove the entry for ''Rice, straw'' from the table in paragraph (a).

§ 180.434 [Amended]

■ 25. In § 180.434, remove the entry for ''Rice, straw'' from the table in paragraph (a).

§ 180.438 [Amended]

■ 26. In § 180.438, remove the entry for ''Rice, straw'' from the table in paragraph (a)(1) and from the table in paragraph (a)(2).

§ 180.439 [Amended]

■ 27. In § 180.439, remove the entry for ''Rice, straw'' from the table in paragraph (a).

§ 180.441 [Amended]

■ 28. In § 180.441, remove the entry for ''Soybean, soapstock'' from the table in paragraph (a)(1).

§ 180.445 [Amended]

■ 29. In § 180.445, remove the entry for ''Rice, straw'' from the table in paragraph (a).

§ 180.447 [Amended]

■ 30. In § 180.447, remove the entry for ''Rice, straw'' from the table in paragraph (a)(2).

§ 180.451 [Amended]

■ 31. In § 180.451, remove the entry for ''Rice, straw'' from the table in paragraph (a).

§ 180.463 [Amended]

■ 32. In § 180.463, remove the entry for ''Rice, straw'' from the table in paragraph (a)(1).

§ 180.473 [Amended]

■ 33. In § 180.473, remove the entry for ''Rice, straw'' from the table in paragraph (a).

■ 34. In § 180.476, revise the table in paragraph (a)(1) and revise the table in paragraph (a)(2) to read as follows:

§ 180.476 Triflumizole; tolerances for residues.

(a) * * *

(1) * * *

Commodity	Parts per million
Berry, low growing, subgroup 13–07G, except cranberry	2.0
Brassica, head and stem, subgroup 5A	8.0
Brassica, leafy greens, subgroup 5B	40
Canistel	2.5
Cherry, sweet	1.5
Cherry, tart	1.5
Cilantro, leaves	35
Fruit, pome, group 11–10	0.50
Fruit, small, vine climbing, except fuzzy kiwifruit, subgroup 13–07F	2.5
Hazelnut	0.05
Hop, dried cones	50
Leafy greens subgroup 4A, except spinach	35
Mango	2.5
Papaya	2.5
Pineapple	4.0

Commodity	Parts per million
Sapodilla	2.5
Sapote, black	2.5
Sapote, mamey	2.5
Star apple	2.5
Swiss chard	18
Tomato	1.5
Turnip, greens	40
Vegetable, cucurbit, group 9	0.5

(2) * * *

Commodity	Parts per million
Cattle, fat	0.10
Cattle, meat byproducts	0.20
Goat, fat	0.10
Goat, meat byproducts	0.20
Horse, fat	0.10
Horse, meat byproducts	0.20
Sheep, fat	0.10
Sheep, meat byproducts	0.20

* * * * *

§ 180.479 [Amended]

■ 35. In § 180.479, remove the entry for ''Rice, straw'' from the table in paragraph (a)(2).

§ 180.484 [Amended]

■ 36. In § 180.484, remove the entry for ''Rice, straw'' from the table in paragraph (a).

§ 180.495 [Amended]

■ 37. In § 180.495, remove the entry for ''Coriander, leaves'' from the table in paragraph (a).

§ 180.507 [Amended]

■ 38. In § 180.507, remove the entry for ''Rice, straw'' from the table in paragraph (a)(1).

§ 180.515 [Amended]

■ 39. In § 180.515, remove the entries for ''Caneberry subgroup 13A,'' ''Cotton, hulls,'' ''Cotton, meal,'' ''Cotton, refined oil'' and ''Rice, straw'' from the table in paragraph (a).

§ 180.517 [Amended]

■ 40. In § 180.517, remove the entry for ''Rice, straw'' from the table in paragraph (a).

§ 180.541 [Removed]

■ 41. Remove § 180.541.

§ 180.555 [Amended]

■ 42. In § 180.555, remove the entry for ''Rice, straw'' from the table in paragraph (a).

§ 180.570 [Amended]

■ 43. In § 180.570, remove the entry for ''Rice, straw'' from the table in paragraph (a)(2).

§ 180.577 [Amended]

■ 44. In § 180.577, remove the entry for ''Rice, straw'' from the table in paragraph (a).

§ 180.602 [Amended]

■ 45. In § 180.602, remove the entry for ''Hop, dried cones'' from the table in paragraph (a).

§ 180.605 [Amended]

■ 46. In § 180.605, remove the entry for ''Rice, straw'' from the table in paragraph (a).

§ 180.625 [Amended]

■ 47. In § 180.625, remove the entry for ''Rice, straw'' from the table in paragraph (a).

[FR Doc. 2014–16063 Filed 7–10–14; 8:45 am]

BILLING CODE 6560–50–P

DEPARTMENT OF COMMERCE

National Oceanic and Atmospheric Administration

50 CFR Parts 223 and 224

RIN 0648–XD267

Endangered and Threatened Wildlife; 90-Day Finding on a Petition To Identify the Central North Pacific Population of Humpback Whale as a Distinct Population Segment (DPS) and Delist the DPS Under the Endangered Species Act; Extension of Public Comment Period

AGENCY: National Marine Fisheries Service (NMFS), National Oceanic and Atmospheric Administration (NOAA), Commerce.

ACTION: Extension of public comment period.

SUMMARY: We, NMFS, announce the extension of the public comment period on our June 26, 2014, 90-day finding on a petition to designate the Central North Pacific population of humpback whale (*Megaptera novaeangliae*) as a Distinct Population Segment (DPS) and delist the DPS under the Endangered Species Act (ESA). As part of that finding, we solicited scientific and commercial information about the status of this population and announced a 30-day comment period to end on July 28, 2014. Today, we extend the public comment period to August 27, 2014. Comments previously submitted need not be resubmitted, as they will be fully considered in the agency's final determination.

DATES: The deadline for receipt of comments is extended from July 28, 2014 until August 27, 2014.

ADDRESSES: You may submit comments on this document, identified by FDMS Docket Number NOAA–NMFS–2014–0051, by any of the following methods:

- *Electronic Submission:* Submit all electronic public comments via the Federal e-Rulemaking Portal. Go to *www.regulations.gov/#!docketDetail;D=NOAA-NMFS-2014-0051,* click the ''Comment Now!'' icon, complete the required fields, and enter or attach your comments.
- *Mail:* Address written comments to Jon Kurland, Assistant Regional Administrator for Protected Resources, Alaska Region NMFS, Attn: Ellen Sebastian. Mail comments to P.O. Box 21668, Juneau, AK 99802–1668.

Instructions: Comments sent by any other method, to any other address or individual, or received after the end of the comment period, may not be considered by NMFS. All comments received are a part of the public record and will generally be posted for public viewing on *www.regulations.gov* without change. All personal identifying information (e.g., name, address, etc.), confidential business information, or otherwise sensitive information submitted voluntarily by the sender will be publicly accessible. NMFS will accept anonymous comments (enter ''N/A'' in the required fields if you wish to remain anonymous). Attachments to electronic comments will be accepted in Microsoft Word, Excel, or Adobe PDF file formats only.

Interested persons may obtain a copy of the petition online at the NMFS Alaska Region Web site: *http://alaskafisheries.noaa.gov/protected resources/whales/humpback/*.

FOR FURTHER INFORMATION CONTACT: Aleria Jensen, NMFS Alaska Region, (907) 586–7248 or Jon Kurland, NMFS Alaska Region, (907) 586–7638.

SUPPLEMENTARY INFORMATION:

Background

On June 26, 2014 we published a proposed rule (79 FR 36281) announcing a positive 90-day finding on a petition to designate the Central North Pacific population of humpback whale as a Distinct Population Segment (DPS) and delist the DPS under the Endangered Species Act (ESA). In that notice we also solicited comments and information from the public to inform the continued development of our humpback whale status review to determine whether the Central North Pacific humpback whale population constitutes a DPS under the ESA, and if so, the risk of extinction to this DPS.

We have received requests to extend the public comment period by 30 days

to be consistent with previous 60-day comment periods for other listing and delisting actions under the ESA. Given the complexity of the issues raised in the petition, this extension would provide the public with additional time to gather relevant information and adequately comment on the validity of the petitioned action in a meaningful and constructive manner. We considered these requests and concluded that a 30-day extension should allow sufficient time for responders to submit comments without significantly delaying the completion of the status review. We are therefore extending the close of the public comment period from July 28, 2014, to August 27, 2014. Although we have extended the public comment period, we are unable to extend the deadline for completing the status review. As such, we urge members of the public to submit their comments as soon as possible to allow us more time to review and incorporate the submitted information where appropriate.

Authority: The authority for this action is the Endangered Species Act of 1973, as amended (16 U.S.C. 1531 *et seq.*).

Dated: July 7, 2014.

Perry F. Gayaldo,

Deputy Director, Office of Protected Resources, National Marine Fisheries Service.

[FR Doc. 2014–16150 Filed 7–10–14; 8:45 am]

BILLING CODE 3510–22–P

DEPARTMENT OF COMMERCE

National Oceanic and Atmospheric Administration

50 CFR Part 300

[Docket No. 140502404–4404–01]

RIN 0648–BE21

International Fisheries; Western and Central Pacific Fisheries for Highly Migratory Species; Fishing Capacity Limits in Purse Seine and Longline Fisheries

AGENCY: National Marine Fisheries Service (NMFS), National Oceanic and Atmospheric Administration (NOAA), Commerce.

ACTION: Advance notice of proposed rulemaking; notification of control date; request for comments.

SUMMARY: NMFS announces that persons who bring a U.S. purse seine or longline vessel into the fisheries in the western and central Pacific Ocean (WCPO) after July 11, 2014 (''control date''), or who, after the control date, expand the carrying capacity or well volume of a purse seine vessel already in the fishery, are not guaranteed the future participation of that vessel in the fishery if NMFS decides to limit the number of fishing vessels in the fishery or, with respect to purse seine vessels, the fishing capacity of the fleet or of vessels in the fleet in terms of carrying capacity or well volume. Furthermore, with respect to purse seine vessels, even if the future participation of such a vessel is allowed, the vessel's future allowable level of fishing effort and/or catch might be limited if NMFS decides to limit vessels' individual or collective allowable levels of fishing effort or catch. NMFS is considering the need to undertake such actions to implement provisions of a conservation and management measure adopted by the Commission for the Conservation and Management of Highly Migratory Fish Stocks in the Western and Central Pacific Ocean (WCPFC or Commission).

DATES: Comments must be submitted in writing by August 11, 2014.

ADDRESSES: You may submit comments on this document, identified by NOAA–NMFS–2014–0067, by either of the following methods:

- *Electronic Submission:* Submit all electronic public comments via the Federal e-Rulemaking Portal. Go to *www.regulations.gov/#!docketDetail;D=NOAA-NMFS-2014-0067,* click the ''Comment Now!'' icon, complete the required fields, and enter or attach your comments.
- *Mail:* Submit written comments to Michael D. Tosatto, Regional Administrator, NMFS, Pacific Islands Regional Office (PIRO), 1845 Wasp Blvd., Building 176, Honolulu, HI 96818.

Instructions: Comments sent by any other method, to any other address or individual, or received after the end of the comment period, might not be considered by NMFS. All comments received are a part of the public record and will generally be posted for public viewing on *www.regulations.gov* without change. All personal identifying information (e.g., name and address), confidential business information, or otherwise sensitive information submitted voluntarily by the sender will be publicly accessible. NMFS will accept anonymous comments (enter ''N/A'' in the required fields if you wish to remain anonymous). Attachments to electronic comments will be accepted in Microsoft Word, Excel, or Adobe PDF file formats only.

FOR FURTHER INFORMATION CONTACT: Tom Graham, NMFS PIRO, 808–725–5032.

SUPPLEMENTARY INFORMATION:

Background on the U.S. WCPO Purse Seine and Longline Fisheries

Participation by U.S. flagged purse seine and longline vessels in the WCPO fisheries is contingent on fishing authorizations granted under several statutes.

The U.S. WCPO purse seine fishery is regulated in part under the authority of the South Pacific Tuna Act of 1988 (16 U.S.C. 973–973r; SPTA) through implementing regulations at 50 CFR part 300, subpart D. The terms of the treaty between the United States and 16 Members of the Pacific Islands Forum Fisheries Agency (Treaty on Fisheries between the Governments of Certain Pacific Island States and the Government of the United States of America and its annexes, schedules, and implementing agreements, as amended; hereafter called ''the Treaty'') are implemented by the SPTA and the regulations cited above. The Treaty provides access to and generally governs U.S. fishing vessels operating in the Treaty Area, which comprises much of the WCPO, including all or portions of the exclusive economic zones of the 16 Pacific Island Parties to the Treaty (PIPs) through a licensing system. License applications are first submitted to NMFS, which are approved or disapproved according to procedures established at 50 CFR 300.32. NMFS forwards approved applications to the Pacific Islands Forum Fisheries Agency (FFA, located in the Solomon Islands), which issues the licenses and acts as the Treaty administrator on behalf of the PIPs.

In addition to being governed by the Treaty and the SPTA, the U.S. WCPO purse seine fishery is subject to the authority of the WCPFC Implementation Act (16 U.S.C. 6901 *et seq.*). The WCPFC Implementation Act authorizes the Secretary of Commerce to implement the provisions of the Convention on the Conservation and Management of Highly Migratory Fish Stocks in the Western and Central Pacific Ocean (Convention) and the decisions of the Commission, which was established under the Convention. The area of competence of the Commission, or the Convention Area, includes the majority of the Treaty Area. As a Party to the Convention and a Member of the Commission, the United States is obligated to implement the decisions of the Commission. The decisions of the Commission can be found on its Web site (*http://www.wcpfc.int/*). Pursuant to the Convention and the decisions of the Commission, a U.S. fishing vessel must have a high seas fishing permit (see below) with a valid WCPFC Area

Endorsement, issued by NMFS under 50 CFR 300.212, to be used for commercial fishing for highly migratory species on the high seas in the Convention Area.

The U.S. WCPO purse seine fishery is also subject to the authority of the Magnuson-Stevens Fishery Conservation and Management Act (16 U.S.C. 1801 *et seq.;* MSA), particularly with respect to the operation of the fishery within the U.S. exclusive economic zone. The fishery is also subject to the authority of the High Seas Fishing Compliance Act (16 U.S.C. 5501 *et seq.*), which governs the conduct of U.S. fishing vessels on the high seas, and under which a high seas fishing permit is required for a U.S. fishing vessel to be used for commercial fishing anywhere on the high seas.

The U.S. WCPO longline fishery is regulated in part under the authority of the MSA. Longline vessels are subject to the management regime developed by the Western Pacific Fishery Management Council and established in the Fishery Ecosystem Plan for Pacific Pelagic Fisheries of the Western Pacific Region, which is implemented through regulations at 50 CFR part 665. Among other management controls, there are limited entry programs for the Hawaii and American Samoa longline fisheries, with specific limits on the numbers of fishing permits available in each of the two fisheries. Longline vessels are also subject to the authority of the WCPFC Implementation Act. Like U.S. purse seine vessels, a U.S. longline vessel must have a high seas fishing permit with a valid WCPFC Area Endorsement, issued by NMFS under 50 CFR 300.212, to be used for commercial fishing for highly migratory species on the high seas in the Convention Area.

Recent Decisions of the WCPFC

In December 2013, the Commission adopted a conservation and management measure for bigeye tuna, yellowfin tuna, and skipjack tuna (CMM 2013–01). Most of that CMM's provisions are in effect from February 4, 2014, until December 31, 2017. The CMM includes provisions specific to longline vessels and provisions specific to purse seine vessels. The CMM's longline provisions include limits on vessel numbers and limits on bigeye tuna catches. The CMM's purse seine provisions include limits on fishing effort, restrictions on the use of fish aggregating devices (FADs), catch retention requirements, observer requirements, and restrictions on vessel numbers and vessels' fishing capacity.

This advance notice of proposed rulemaking (ANPR) and control date relate to CMM 2013–01's provisions on vessel numbers (which apply to both purse seine and longline vessels) and its provisions on vessels' fishing capacity (which apply only to purse seine vessels).

Regarding purse seine vessels, CMM 2013–01 obligates certain flag States, including the United States, to limit the number of their purse seine vessels that are greater than 24 meters in length, have freezing capacity, and operate between the latitudes of 20° North and 20° South to the current level (paragraph 49 of CMM 2013–01). CMM 2013–01 also obligates certain flag States, including the United States, to ensure that purse seine vessels in their fleets are not replaced with vessels with greater carrying capacity or well volume, or that the catch or fishing effort of such vessels is not greater than that of the replaced vessels (paragraph 50 of CMM 2013–01). Notwithstanding this latter obligation, CMM 2013–01 provides for flag States to allow the replacement of purse seine vessels in their fleets with vessels for which building approval has been granted and notified to the Commission before March 1, 2014 (paragraph 50 of CMM 2013–01). These provisions for purse seine vessels do not apply to small island developing States or Participating Territories of the WCPFC, which include American Samoa, Commonwealth of the Northern Mariana Islands, and Guam.

Regarding longline vessels, CMM 2013–01 obligates certain flag States, including the United States, to limit the number of their longline vessels with freezing capacity targeting bigeye tuna to the current level (paragraph 51 of CMM 2013–01), and to limit the number of their ice-chilled longline vessels targeting bigeye tuna and landing exclusively fresh fish to the current level or to the current number of licenses available under established limited entry programs (paragraph 52 of CMM 2013–01). These provisions for longline vessels do not apply to small island developing States or Participating Territories of the WCPFC, which include American Samoa, Commonwealth of the Northern Mariana Islands, and Guam.

Establishment of Control Date and Possible Rulemaking

One purpose of this ANPR is to notify persons that if they attempt to bring a vessel into the U.S. WCPO purse seine fishery or longline fishery after the control date of July 11, 2014, or if, after the control date, they expand the carrying capacity or well volume of a purse seine vessel already in the fishery, there is no assurance of being granted future participation of that vessel in the fishery if NMFS decides to limit the number of fishing vessels in the fishery, or, with respect to purse seine vessels, the fishing capacity of the fleet or of vessels in the fleet in terms of carrying capacity or well volume. Furthermore, with respect to purse seine vessels, even if the participation of such a vessel in the future is granted, the vessel's future allowable level of fishing effort and/or catch might be limited if NMFS decides to limit vessels' individual or collective allowable levels of fishing effort or catch beyond the limits already in place. For the purse seine fishery, any of these limits would likely apply only to vessels more than 24 meters in length with freezing capacity (all of the 40 currently SPTT-licensed purse seine vessels fall in this category). For the longline fishery, any limit on vessel numbers would likely apply only to vessels that NMFS determines target bigeye tuna.

A second purpose of this ANPR is to solicit comments and input on possible ways to establish limits on purse seine fishing capacity as required under paragraphs 49 and 50 of CMM 2013–01, specifically on vessels' individual or collective carrying capacity, well volume, fishing effort, and/or catch levels. NMFS is especially interested in comments on whether it would be preferable to place limits on carrying capacity, well volume, fishing effort, or catch levels; on possible measures of carrying capacity and well volume that could be used for the purpose of such limits; and on possible methods for determining and verifying such measures.

Establishment of this control date does not commit NMFS to any particular action or, if action is taken, any particular criteria for limiting vessel numbers in the U.S. WCPFC purse seine or longline fisheries or for limiting fishing capacity or fishing effort or catch levels in the U.S. WCPO purse seine fishery: NMFS might decide to continue to rely on existing regulatory controls, such as, for purse seine vessels, the limits on the number of available licenses under SPTA regulations, and for longline vessels, the limits on the number of available permits under MSA regulations. For example, NMFS has determined that the United States is currently in full compliance with the longline vessel number limits of CMM 2013–01 by virtue of the Hawaii longline limited entry program. As long as the number of permits available under that program does not increase—and NMFS does not anticipate any such increase in the foreseeable future—the United States would remain in

compliance with the longline vessel number limits of CMM 2013–01.

Vessels are not guaranteed future participation in the U.S. WCPO purse seine or longline fisheries, regardless of their participation before or after the control date. Furthermore, NMFS might adopt a different control date or it might take an action that does not involve a control date.

If NMFS proceeds with a proposed rule, the scope of the rule might be expanded to implement additional provisions of CMM 2013–01.

Classification

This advance notice of proposed rulemaking has been determined to be not significant for the purposes of Executive Order 12866.

Authority: 16 U.S.C. 6901 *et seq.*

Dated: July 7, 2014.

Samuel D. Rauch III,

Deputy Assistant Administrator for Regulatory Programs, National Marine Fisheries Service.

[FR Doc. 2014–16202 Filed 7–10–14; 8:45 am]

BILLING CODE 3510–22–P

Notices

Federal Register
Vol. 79, No. 133
Friday, July 11, 2014

This section of the FEDERAL REGISTER contains documents other than rules or proposed rules that are applicable to the public. Notices of hearings and investigations, committee meetings, agency decisions and rulings, delegations of authority, filing of petitions and applications and agency statements of organization and functions are examples of documents appearing in this section.

AGENCY FOR INTERNATIONAL DEVELOPMENT

Notice of Cancellation of July 9 ACVFA Meeting

AGENCY: United States Agency for International Development.

ACTION: Notice of cancellation of meeting.

SUMMARY: Pursuant to the Federal Advisory Committee Act, notice is hereby given of cancellation of the meeting of the Advisory Committee on Voluntary Foreign Aid (ACVFA) on Wednesday, July 9, 2014 in the Horizon Room of the Ronald Reagan Building at 1300 Pennsylvania Ave. NW., Washington, DC, which was published in the **Federal Register** on June 25, 2014, 79 FR 35995.

FOR FURTHER INFORMATION CONTACT: Jayne Thomisee, 202–712–5506.

Dated: July 3, 2014.

Jayne Thomisee,

Executive Director & Policy Advisor, U.S. Agency for International Development.

[FR Doc. 2014–16246 Filed 7–10–14; 8:45 am]

BILLING CODE P

DEPARTMENT OF AGRICULTURE

Submission for OMB Review; Comment Request

July 7, 2014.

The Department of Agriculture has submitted the following information collection requirement(s) to OMB for review and clearance under the Paperwork Reduction Act of 1995, Public Law 104–13. Comments regarding (a) whether the collection of information is necessary for the proper performance of the functions of the agency, including whether the information will have practical utility; (b) the accuracy of the agency's estimate of burden including the validity of the methodology and assumptions used; (c) ways to enhance the quality, utility and clarity of the information to be collected; (d) ways to minimize the burden of the collection of information on those who are to respond, including through the use of appropriate automated, electronic, mechanical, or other technological collection techniques and other forms of information technology.

Comments regarding this information collection received by August 11, 2014 will be considered. Written comments should be addressed to: Desk Officer for Agriculture, Office of Information and Regulatory Affairs, Office of Management and Budget (OMB), New Executive Office Building, 725—17th Street NW., Washington, DC, 20503. Commentors are encouraged to submit their comments to OMB via email to: *OIRA_Submission@omb.eop.gov* or fax (202) 395–5806 and to Departmental Clearance Office, USDA, OCIO, Mail Stop 7602, Washington, DC 20250–7602. Copies of the submission(s) may be obtained by calling (202) 720–8681.

An agency may not conduct or sponsor a collection of information unless the collection of information displays a currently valid OMB control number and the agency informs potential persons who are to respond to the collection of information that such persons are not required to respond to the collection of information unless it displays a currently valid OMB control number.

30-day Federal Register Notice

Forest Service

Title: National Forest System Land Management Planning—Generic Collection

OMB Control Number: 0596–NEW

Summary Of Collection: Section 6 of the National Forest Management Act of 1976 (16 U.S.C. 1600 *et seq.*) and implementing regulations 36 CFR part 219 (2012 Planning Rule) direct the U.S. Forest Service to revise land management plans for each National Forest System unit every 15 years, and to continuously monitor conditions to inform interim or subsequent planning actions. The planning process requires public participation and involvement. As such, the agency will invite public participation broadly to facilitate public comments and submission of information that members of the public find to be relevant.

Need And Use Of The Information: To ensure that the Agency can be inclusive of, and responsive to, customer/stakeholder concerns during the development, assessment, and monitoring of National Forest System Land Management Plans, the agency will use a variety of methods, such as but not limited to, customer/stakeholder comment cards, focus groups, small discussion groups and surveys. Feedback and input will provide insights into customer or stakeholder perceptions, experiences and expectations, provide an early warning of issues with service, or focus attention on areas where communications, training, or changes in operations might improve delivery of products or services such as improved Land Management Planning or the implementation thereof.

Description Of Respondents: Individuals or households; business or other for-profit; not-for-profit institutions; and State, Local, Tribal Government

Number Of Respondents: 37,250

Frequency Of Responses: Reporting: On occasion

Total Burden Hours: 63,000

Charlene Parker,

Departmental Information Collection Clearance Officer.

[FR Doc. 2014–16210 Filed 7–10–14; 8:45 am]

BILLING CODE 3411–15–P

DEPARTMENT OF COMMERCE

Submission for OMB Review; Comment Request

The Department of Commerce will submit to the Office of Management and Budget (OMB) for clearance the following proposal for collection of information under the provisions of the Paperwork Reduction Act (44 U.S.C. Chapter 35).

Agency: National Oceanic and Atmospheric Administration (NOAA).

Title: Alaska Pacific Halibut Fisheries: Subsistence (formerly titled: Alaska Pacific Halibut Fisheries: Special Subsistence Permits and Harvest Logs).

OMB Control Number: 0648–0512.

Form Number(s): NA.

Type of Request: Regular submission (revision and extension of a current information collection).

Number of Respondents: 3,806.

Average Hours Per Response: Permit applications and Subsistence Halibut

Registration Certificates, 10 minutes; Community harvest log, 30 minutes; Ceremonial or educational harvest log, 30 minutes; Appeal for permit denial, 4 hours; gear marking, 15 minutes per buoy.

Burden Hours: 1,379.

Needs and Uses: This request is for a revision and extension of a currently approved information collection.

This information collection describes special permits and certificates issued to participants in the Pacific halibut subsistence fishery in waters off the coast of Alaska and any appeals resulting from denials. The National Marine Fisheries Service (NMFS) designed the permits to work in conjunction with other halibut harvest assessment measures. Subsistence fishing for halibut has occurred for many years among the Alaska Native people and non-Native people. Special permits are initiated in response to the concerns of Native and community groups regarding increased restrictions in International Pacific Halibut Commission Area 2C and include Community Harvest Permits, Ceremonial Permits, and Educational Permits.

A Community Harvest Permit allows the community or Alaska Native tribe to appoint one or more individuals from its respective community or tribe to harvest subsistence halibut from a single vessel under reduced gear and harvest restrictions. Ceremonial and Educational Permits are available exclusively to Alaska Native tribes. Eligible Alaska Native tribes may appoint only one Ceremonial Permit Coordinator per tribe for Ceremonial Permits or one authorized Instructor per tribe for Educational Permits.

Except for enrolled students fishing under a valid Educational Permit, special permits require persons fishing under them to also possess a Subsistence Halibut Registration Certificate (SHARC), formerly approved under OMB Control No. 0648–0460, now to be included in this information collection, which identifies those persons who are currently eligible for subsistence halibut fishing. Each of the instruments is designed to minimize the reporting burden on subsistence halibut fishermen while retrieving essential information. Along with the SHARC registration, gear-marking of subsistence halibut vessels has also been transferred from OMB Control No. 0648–0460.

Affected Public: Individuals or households.

Frequency: Annually and on occasion.

Respondent's Obligation: Required to obtain or maintain benefits.

This information collection request may be viewed at *reginfo.gov.* Follow the instructions to view Department of Commerce collections currently under review by OMB.

Written comments and recommendations for the proposed information collection should be sent within 30 days of publication of this notice to *OIRA_Submission@omb.eop.gov* or faxed to (202) 395–5806.

Dated: July 8, 2014

Gwellnar Banks,

Management Analyst, Office of the Chief Information Officer.

[FR Doc. 2014–16201 Filed 7–10–14; 8:45 am]

BILLING CODE 3510–22–P

DEPARTMENT OF COMMERCE

Economic Development Administration

Notice of Petitions by Firms for Determination of Eligibility to Apply for Trade Adjustment Assistance

AGENCY: Economic Development Administration, Department of Commerce.

ACTION: Notice and Opportunity for Public Comment.

Pursuant to Section 251 of the Trade Act 1974, as amended (19 U.S.C. 2341 et seq.), the Economic Development Administration (EDA) has received petitions for certification of eligibility to apply for Trade Adjustment Assistance from the firms listed below. Accordingly, EDA has initiated investigations to determine whether increased imports into the United States of articles like or directly competitive with those produced by each of these firms contributed importantly to the total or partial separation of the firm's workers, or threat thereof, and to a decrease in sales or production of each petitioning firm.

LIST OF PETITIONS RECEIVED BY EDA FOR CERTIFICATION ELIGIBILITY TO APPLY FOR TRADE ADJUSTMENT ASSISTANCE

[06/26/2014 through 07/07/2014]

Firm name	Firm address	Date accepted for investigation	Product(s)
Sheyenne Tooling and Manufacturing, Inc..	701 Lenham Ave, SW, Cooperstown, ND 58425.	7/7/2014	The firm manufactures articles are made from metals, using metal fabrication processes.
Grrreat Creations, Inc.	597 Shawnee Street, Nappanee, IN 46550.	7/7/2014	The firm manufactures and machines aluminum truck cap and lid clamps, both standard and special design.

Any party having a substantial interest in these proceedings may request a public hearing on the matter. A written request for a hearing must be submitted to the Trade Adjustment Assistance for Firms Division, Room 71030, Economic Development Administration, U.S. Department of Commerce, Washington, DC 20230, no later than ten (10) calendar days following publication of this notice.

Please follow the requirements set forth in EDA's regulations at 13 CFR 315.9 for procedures to request a public hearing. The Catalog of Federal Domestic Assistance official number and title for the program under which these petitions are submitted is 11.313, Trade Adjustment Assistance for Firms.

Dated: July 7, 2014.

Michael DeVillo,

Eligibility Examiner.

[FR Doc. 2014–16217 Filed 7–10–14; 8:45 am]

BILLING CODE 3510–WH–P

DEPARTMENT OF COMMERCE

International Trade Administration

[A–552–801]

Certain Frozen Fish Fillets from the Socialist Republic of Vietnam: Preliminary Results of the Antidumping Duty Administrative Review; 2012–2013

AGENCY: Enforcement and Compliance, International Trade Administration, Department of Commerce.

SUMMARY: The Department of Commerce (''the Department'') is conducting the

tenth administrative review of the antidumping duty order on certain frozen fish fillets (''fish fillets'') from the Socialist Republic of Vietnam (''Vietnam'').[1] The Department preliminarily determines that the Hung Vuong Group (''HVG'')[2] sold subject merchandise in the United States at prices below normal value (''NV'') during the period of review (''POR'') August 1, 2012, through July 31, 2013. With respect to Anvifish Joint Stock Company (''Anvifish''), this exporter failed to establish that it is separate from the Vietnam-wide entity. As a result, the Vietnam-wide entity is now under review.[3] We are preliminarily applying adverse facts available (''AFA'') to the Vietnam-wide entity because an element of the entity, Anvifish, failed to act to the best of its ability in complying with the Department's request for information in this review within the established deadlines, significantly impeded the proceeding, and provided information that cannot be verified. If these preliminary results are adopted in the final results, the Department will instruct U.S. Customs and Border Protection (''CBP'') to assess antidumping duties on all appropriate entries of subject merchandise during the POR. Interested parties are invited to comment on these preliminary results.

DATES: *Effective Date:* July 11, 2014.

FOR FURTHER INFORMATION CONTACT: Paul Walker or Steven Hampton, AD/CVD Operations, Office V, Enforcement and Compliance, International Trade Administration, U.S. Department of Commerce, 14th Street and Constitution Avenue NW., Washington, DC 20230; telephone 202–482–0413 or 202–482–0116, respectively.

SUPPLEMENTARY INFORMATION:

Background

On October 2, 2013, the Department initiated the tenth administrative review of the antidumping duty order on fish fillets from Vietnam for the period August 1, 2012, through July 31, 2013.[4] As explained in the memorandum from the Assistant Secretary for Enforcement and Compliance, the Department exercised its discretion to toll deadlines for the duration of the closure of the Federal Government from October 1 through October 16, 2013.[5] On March 26, 2014, the Department partially extended the deadline for issuing the preliminary results by 30 days.[6] On June 11, 2014, the Department partially extended the deadline for issuing the preliminary results by 14 days.[7] The revised deadline for the preliminary results of this administrative is now July 2, 2014.

Scope of the Order

The product covered by the order is frozen fish fillets, including regular, shank, and strip fillets and portions thereof, whether or not breaded or marinated, of the species *Pangasius bocourti, Pangasius hypophthalmus* (also known as *Pangasius pangasius*), and *Pangasius micronemus.* These products are classifiable under tariff article codes 0304.29.6033, 0304.62.0020, 0305.59.0000, 0305.59.4000, 1604.19.2000, 1604.19.2100, 1604.19.3000, 1604.19.3100, 1604.19.4000, 1604.19.4100, 1604.19.5000, 1604.19.5100, 1604.19.6100, and 1604.19.8100 (Frozen Fish Fillets of the species *Pangasius* including basa and tra) of the Harmonized Tariff Schedule of the United States (''HTSUS'').[8] Although the HTSUS subheading is provided for convenience and Customs purposes, our written description of the scope of the order is dispositive.[9]

Preliminary Determination of No Shipments

On December 11, 2013, the following companies filed no-shipment certifications indicating that they did not export subject merchandise to the United States during the POR: An Giang Agriculture and Food Import-Export Joint Stock Company; Golden Quality Seafood Corporation; Hoa Phat Seafood Import-Export and Processing J.S.C.; and To Chau Joint Stock Company. Based on the certifications submitted by the above companies, and our analysis of the CBP information, we preliminarily determine that An Giang Agriculture and Food Import-Export Joint Stock Company, Golden Quality Seafood Corporation, Hoa Phat Seafood Import-Export and Processing J.S.C., and To Chau Joint Stock Company[10] did not have any reviewable transactions during the POR. The Department finds that consistent with its practice in non-market economy (''NME'') cases, it is appropriate not to rescind the review in part in this circumstance but, rather, to complete the review with respect to the above named companies and issue appropriate instructions to CBP based on the final results of the review.[11]

---

[1] *See Notice of Antidumping Duty Order: Certain Frozen Fish Fillets from the Socialist Republic of Vietnam,* 68 FR 47909 (August 12, 2003) (''*Order*'').

[2] The Department previously found that An Giang Fisheries Import & Export Joint Stock Company (''Agifish'') is a member of the Hung Vuong Group, which also includes Asia Pangasius Company Limited, Europe Joint Stock Company, Hung Vuong Joint Stock Company, Hung Vuong Mascato Company Limited, Hung Vuong—Vinh Long Co., Ltd., and Hung Vuong—Sa Dec Co., Ltd. *See Certain Frozen Fish Fillets From the Socialist Republic of Vietnam: Final Results of the Antidumping Duty Administrative Review and New Shipper Review; 2011–2012,* 79 FR 19053 (April 7, 2014).

[3] On November 4, 2013, the Department announced a change in practice with respect to the conditional review of the NME entity. *See Antidumping Proceedings; Announcement of Change in Department Practice for Respondent Selection in Antidumping Duty Proceedings and Conditional Review of the Nonmarket Economy Entity in NME Antidumping Proceedings,* 78 FR 65963 (Nov. 4, 2013). This review initiated before this change in practice became effective; therefore, the Department's new practice does not apply to this segment.

[4] *See Initiation of Antidumping and Countervailing Duty Administrative Reviews and Request for Revocation in Part,* 78 FR 60834 (October 2, 2013) (''*Initiation Notice*''). On November 8, 2013, the Department published a second notice to list two companies that were inadvertently omitted from the *Initiation Notice. See Initiation of Antidumping and Countervailing Duty Administrative Reviews and Request for Revocation in Part,* 78 FR 67104 (November 8, 2013).

[5] *See* Memorandum for the Record from Paul Piquado, Assistant Secretary for Enforcement and Compliance, ''Deadlines Affected by the Shutdown of the Federal Government'' (October 18, 2013).

[6] *See* Memorandum to Gary Taverman, Senior Advisor for Antidumping and Countervailing Duty Operations, through James C. Doyle, Director, Office V, Antidumping and Countervailing Duty Operations regarding ''Certain Frozen Fish Fillets from the Socialist Republic of Vietnam: Extension of Deadline for Preliminary Results of 2012–2013 Antidumping Duty Administrative Review,'' dated March 26, 2014.

[7] *See* Memorandum to Gary Taverman, Senior Advisor for Antidumping and Countervailing Duty Operations, through James C. Doyle, Director, Office V, Antidumping and Countervailing Duty Operations regarding ''Certain Frozen Fish Fillets from the Socialist Republic of Vietnam: Extension of Deadline for Preliminary Results of 2012–2013 Antidumping Duty Administrative Review,'' dated June 11, 2014.

[8] Until July 1, 2004, these products were classifiable under HTSUS 0304.20.6030 (Frozen Catfish Fillets), 0304.20.6096 (Frozen Fish Fillets, NESOI), 0304.20.6043 (Frozen Freshwater Fish Fillets), and 0304.20.6057 (Frozen Sole Fillets). Until February 1, 2007, these products were classifiable under HTSUS 0304.20.6033 (Frozen Fish Fillets of the species *Pangasius,* including basa and tra). On March 2, 2011, the Department added two HTSUS numbers at the request of U.S. Customs and Border Protection (''CBP''): 1604.19.2000 and 1604.19.3000. On January 30, 2012, the Department added eight HTSUS numbers at the request of CBP: 0304.62.0020, 0305.59.0000, 1604.19.2100, 1604.19.3100, 1604.19.4100, 1604.19.5100, 1604.19.6100, and 1604.19.8100.

[9] *See* ''Certain Frozen Fish Fillets from the Socialist Republic of Vietnam: Decision Memorandum for the Preliminary Results of the 2012–2013 Antidumping Duty Administrative Review,'' dated concurrently with and hereby adopted by this notice (''Preliminary Decision Memorandum''), for a complete description of the Scope of the Order.

[10] *See* Memorandum to the File through Scot T. Fullerton, Program Manager, Office V, Enforcement and Compliance, through Steven Hampton, International Trade Compliance Analyst, Office V, Enforcement and Compliance, regarding ''2012–2013 Administrative Review of Certain Frozen Fish Fillets from the Socialist Republic of Vietnam,'' dated February 28, 2014.

[11] *See Non-Market Economy Antidumping Proceedings: Assessment of Antidumping Duties,* 76 FR 65694, 65694–65695 (October 24, 2011).

Methodology

The Department conducted this review in accordance with sections 751(a)(1)(B) and 751(a)(2)(A) of the Tariff Act of 1930, as amended (''the Act''). Constructed export prices and export prices have been calculated in accordance with section 772 of the Act. Because Vietnam is an NME within the meaning of section 771(18) of the Act, NV has been calculated in accordance with section 773(c) of the Act.

For a full description of the methodology underlying our conclusions, *see* the Preliminary Decision Memorandum. The Preliminary Decision Memorandum is a public document and is on file electronically via Enforcement and Compliance's Antidumping and Countervailing Duty Centralized Electronic Service System (''IA ACCESS''). IA ACCESS is available to registered users at *http://iaaccess.trade.gov,* and is available to all parties in the Central Records Unit, room 7046 of the main Department of Commerce building. In addition, a complete version of the Preliminary Decision Memorandum can be accessed directly on the Internet at *http://enforcement.trade.gov/frn/.* The signed Preliminary Decision Memorandum and the electronic versions of the Preliminary Decision Memorandum are identical in content.

Preliminary Results of Review

The Department preliminarily determines that the following weighted-average dumping margins exist for the period August 1, 2012, through July 31, 2013:

Exporter	Weighted-average margin (dollars/kilogram) [12]
Hung Vuong Group [13]	0.58
An Giang Agriculture and Food Import-Export Joint Stock Company	(*)
Asia Commerce Fisheries Joint Stock Company	0.58
Binh An Seafood Joint Stock Company	0.58
Cadovimex II Seafood Import-Export and Processing Joint Stock Company	0.58
Can Tho Import-Export Joint Stock Company	0.58
C.P. Vietnam Corporation	0.58
Cuu Long Fish Joint Stock Company	0.58
Dai Thanh Seafoods Company Limited	0.58
Fatifish Company Limited	0.58
GODACO Seafood Joint Stock Company	0.58
Golden Quality Seafood Corporation	(*)
Hiep Thanh Seafood Joint Stock Company	0.58
Hoang Long Seafood Processing Company Limited	0.58
Hoa Phat Seafood Import-Export and Processing J.S.C.	(*)
International Development and Investment Corporation	0.58
Nam Viet Corporation	0.58
Ngoc Ha Co., Ltd. Foods Processing and Trading	0.58
NTSF Seafoods Joint Stock Company	0.58
Quang Minh Seafood Company Limited	0.58
QVD Food Company Ltd.[14]	0.58
Saigon-Mekong Fishery Co., Ltd.	0.58
Southern Fisheries Industries Company Ltd.	0.58
TG Fishery Holdings Corporation	0.58
Thien Ma Seafood Company Limited	0.58
Thuan An Production Trading and Services Co., Ltd.	0.58
To Chau Joint Stock Company	(*)
Vinh Quang Fisheries Joint-Stock Company	0.58
Vietnam-Wide Rate [15]	2.39

* No Shipments or sales to this review, and the firm has an individual rate from a prior segment of the proceeding in which the firm had shipments or sales.

Disclosure, Public Comment & Opportunity To Request a Hearing

The Department will disclose the calculations used in our analysis to parties in this review within five days of the date of publication of this notice in accordance with 19 CFR 351.224(b).

Interested parties may submit case briefs within 30 days after the date of publication of these preliminary results of review in the **Federal Register**.[16] Rebuttals to case briefs, which must be limited to issues raised in the case briefs, must be filed within five days after the time limit for filing case briefs.[17] Parties who submit arguments are requested to submit with the argument (a) a statement of the issue, (b) a brief summary of the argument, and (c)

[12] In the third administrative review of this order, the Department determined that it would calculate per-unit assessment and cash deposit rates for all future reviews. *See Certain Frozen Fish Fillets from the Socialist Republic of Vietnam: Final Results of Antidumping Duty Administrative Review and Partial Rescission,* 73 FR 15479 (March 24, 2008).

[13] This rate is applicable to the Hung Vuong Group, which includes: An Giang Fisheries Import and Export Joint Stock Company, Asia Pangasius Company Limited, Europe Joint Stock Company, Hung Vuong Joint Stock Company, Hung Vuong Mascato Company Limited, Hung Vuong—Vinh Long Co., Ltd., and Hung Vuong—Sa Dec Co., Ltd.

[14] This rate is also applicable to QVD Dong Thap Food Co., Ltd. (''Dong Thap'') and Thuan Hung Co., Ltd. (''THUFICO''). In the second review of this order, the Department found QVD, Dong Thap and THUFICO to be a single entity, and because there has been no evidence submitted on the record of this review that calls this determination into question, we continue to find these companies to be part of a single entity. Therefore, we will assign this rate to the companies in the single entity. *See Certain Frozen Fish Fillets from the Socialist Republic of Vietnam: Preliminary Results of Antidumping Duty Administrative Review,* 71 FR 53387 (September 11, 2006).

[15] The Vietnam-wide rate includes the following companies which are under review, but which did not submit a separate rate application or certification: East Seafoods Limited Liability Company and Anvifish Joint Stock Company.

[16] *See* 19 CFR 351.309(c)(1)(ii).

[17] *See* 19 CFR 351.309(d)(1)–(2).

a table of authorities.[18] Parties submitting briefs should do so pursuant to the Department's electronic filing system, IA ACCESS.

Any interested party may request a hearing within 30 days of publication of this notice.[19] Hearing requests should contain the following information: (1) The party's name, address, and telephone number; (2) the number of participants; and (3) a list of the issues to be discussed. Oral presentations will be limited to issues raised in the briefs. If a request for a hearing is made, parties will be notified of the time and date for the hearing to be held at the U.S. Department of Commerce, 14th Street and Constitution Avenue NW., Washington, DC 20230.[20]

The Department intends to issue the final results of this administrative review, which will include the results of our analysis of all issues raised in the case briefs, within 120 days of publication of these preliminary results in the **Federal Register**, pursuant to section 751(a)(3)(A) of the Act.

Assessment Rates

Upon issuance of the final results, the Department will determine, and CBP shall assess, antidumping duties on all appropriate entries covered by this review.[21] The Department intends to issue assessment instructions to CBP 15 days after the publication date of the final results of this review.

For any individually examined respondent whose weighted average dumping margin is above *de minimis* (*i.e.,* 0.50 percent) in the final results of this review, the Department will calculate importer-specific assessment rates on the basis of the ratio of the total amount of dumping calculated for the importer's examined sales to the total entered value of sales, in accordance with 19 CFR 351.212(b)(1). Where an importer- (or customer-) specific *ad valorem* rate is greater than *de minimis,* the Department will instruct CBP to collect the appropriate duties at the time of liquidation.[22] Where either a respondent's weighted average dumping margin is zero or *de minimis,* or an importer- (or customer-) specific *ad valorem* is zero or *de minimis,* the Department will instruct CBP to liquidate appropriate entries without regard to antidumping duties.[23] For the respondents that were not selected for individual examination in this administrative review and that qualified for a separate rate, the assessment rate will be the rate calculated for HVG.[24] We intend to instruct CBP to liquidate entries containing subject merchandise exported by the Vietnam-wide entity at the Vietnam-wide rate.

The Department refined its assessment practice in NME cases. Pursuant to this refinement in practice, for entries that were not reported in the U.S. sales databases submitted by companies individually examined during the administrative review, the Department will instruct CBP to liquidate such entries at the Vietnam-wide rate. Additionally, if the Department determines that an exporter had no shipments of the subject merchandise, any suspended entries that entered under that exporter's case number (*i.e.,* at that exporter's rate) will be liquidated at the Vietnam-wide rate.[25]

Cash Deposit Requirements

The following cash deposit requirements will be effective upon publication of the final results of this review for shipments of the subject merchandise from Vietnam entered, or withdrawn from warehouse, for consumption on or after the publication date, as provided by sections 751(a)(2)(C) of the Act: (1) For the companies listed above that have a separate rate, the cash deposit rate will be that established in the final results of this review (except, if the rate is zero or *de minimis,* then zero cash deposit will be required); (2) for previously investigated or reviewed Vietnam and non-Vietnam exporters not listed above that received a separate rate in a prior segment of this proceeding, the cash deposit rate will continue to be the existing exporter-specific rate; (3) for all Vietnam exporters of subject merchandise that have not been found to be entitled to a separate rate, the cash deposit rate will be that for the Vietnam -wide entity; and (4) for all non-Vietnam exporters of subject merchandise which have not received their own rate, the cash deposit rate will be the rate applicable to the Vietnam exporter that supplied that non-Vietnam exporter. These deposit requirements, when imposed, shall remain in effect until further notice.

Notification to Importers

This notice also serves as a preliminary reminder to importers of their responsibility under 19 CFR 351.402(f)(2) to file a certificate regarding the reimbursement of antidumping duties prior to liquidation of the relevant entries during the POR. Failure to comply with this requirement could result in the Department's presumption that reimbursement of antidumping duties occurred and the subsequent assessment of double antidumping duties.

This preliminary determination is issued and published in accordance with sections 751(a)(1) and 777(i)(1) of the Act.

Dated: July 2, 2014.

Ronald K. Lorentzen,

Acting Assistant Secretary for Enforcement and Compliance.

Appendix

List of Topics Discussed in the Preliminary Decision Memorandum:

1. Case History
2. Scope of the Order
3. Preliminary Determination of No Shipments
4. Non-Market Economy Country Status
5. Separate Rates
6. Vietnam-Wide Entity
7. Surrogate Country
8. Determination of Comparison Method
9. Results of Differential Pricing Analysis
10. Comparisons to Normal Value
11. U.S. Price
12. Normal Value
13. Factor Valuations
14. Currency Conversion

[FR Doc. 2014–16311 Filed 7–10–14; 8:45 am]

BILLING CODE 3510–DS–P

[18] *See* 19 CFR 351.309(c)(2), (d)(2).

[19] *See* 19 CFR 351.310(c).

[20] *See* 19 CFR 351.310(d).

[21] *See* 19 CFR 351.212(b).

[22] *See* 19 CFR 351.212(b)(1).

[23] *See* 19 CFR 351.106(c)(2).

[24] *See* Preliminary Decision Memorandum.

[25] For a full discussion of this practice, *see Non-Market Economy Antidumping Proceedings: Assessment of Antidumping Duties,* 76 FR 65694 (October 24, 2011).

DEPARTMENT OF COMMERCE

International Trade Administration

[A–570–900]

Diamond Sawblades and Parts Thereof from the People's Republic of China: Final Results of the Expedited Sunset Review of the Antidumping Duty Order

AGENCY: Enforcement and Compliance, International Trade Administration, Department of Commerce.

SUMMARY: The Department of Commerce (the Department) finds that revocation of the antidumping duty order on diamond sawblades and parts thereof (diamond sawblades) from the People's Republic of China (the PRC) would be likely to lead to continuation or recurrence of dumping as indicated in the ''Final Results of Sunset Review'' section of this notice.

DATES: *Effective Date:* July 11, 2014.

FOR FURTHER INFORMATION CONTACT: Yang Jin Chun or Minoo Hatten, AD/CVD Operations, Office I, Enforcement

and Compliance, International Trade Administration, U.S. Department of Commerce, 14th Street and Constitution Avenue NW., Washington, DC 20230; telephone: (202) 482–5760 or (202) 482–1690, respectively.

SUPPLEMENTARY INFORMATION:

Background

In accordance with 19 CFR 351.218(d)(1)(i) and (ii), the Department received notices of intent to participate in this sunset review from Diamond Sawblades Manufacturers Coalition and Husqvarna Construction Products North America (collectively, the domestic interested parties) within 15 days after the date of publication of the *Initiation Notice*.[1] The domestic interested parties claimed interested party status under section 771(9)(A), (C), and (F) of the Tariff Act of 1930, as amended (the Act).

The Department received adequate substantive responses to the *Initiation Notice* from the domestic interested parties within the 30-day period specified in 19 CFR 351.218(d)(3)(i). The Department received no substantive response from any respondent interested parties. In accordance with section 751(c)(3)(B) of the Act and 19 CFR 351.218(e)(1)(ii)(C)(*2*), the Department conducted an expedited (120-day) sunset review of the antidumping duty order on diamond sawblades from the PRC.

Scope of the Order

The merchandise subject to the order is diamond sawblades. The diamond sawblades subject to the order are currently classifiable under subheadings 8202 to 8206 of the Harmonized Tariff Schedule of the United States (HTSUS), and may also enter under 6804.21.00. While the HTSUS subheadings are provided for convenience and customs purposes, the written description is dispositive. A full description of the scope of the order is contained in the Issues and Decision Memorandum.[2]

Analysis of Comments Received

All issues raised in this review are addressed in the Issues and Decision Memorandum, including the likelihood of continuation or recurrence of dumping in the event of revocation and the magnitude of dumping margins likely to prevail if the order was revoked. Parties can find a complete discussion of all issues raised in this review and the corresponding recommendations in the Issues and Decision Memorandum, which is on file electronically via Enforcement and Compliance's Antidumping and Countervailing Duty Centralized Electronic Service System (IA ACCESS). IA ACCESS is available to registered users at *http://iaaccess.trade.gov* and to all parties in the Central Records Unit in Room 7046 of the main Department of Commerce building. In addition, a complete version of the Issues and Decision Memorandum can be accessed directly on the internet at *http://enforcement.trade.gov/frn/index.html*. The signed and electronic versions of the Issues and Decision Memorandum are identical in content.

Final Results of Sunset Review

The Department determines that revocation of the antidumping duty order on diamond sawblades from the PRC would be likely to lead to continuation or recurrence of dumping at weighted-average margins up to 164.09 percent.

Notification to Interested Parties

This notice serves as a reminder to parties subject to administrative protective order (APO) of their responsibility concerning the disposition of proprietary information disclosed under APO in accordance with 19 CFR 351.305(a). Timely written notification of the destruction of APO materials or conversion to judicial protective order is hereby requested. Failure to comply with the regulations and terms of an APO is a violation which is subject to sanction.

The Department is issuing and publishing the final results and notice in accordance with sections 751(c), 752(c), and 777(i)(1) of the Act and 19 CFR 351.221(c)(5)(ii).

Dated: July 7, 2014.

Ronald K. Lorentzen,

Acting Assistant Secretary for Enforcement and Compliance.

[FR Doc. 2014–16307 Filed 7–10–14; 8:45 am]

BILLING CODE 3510–DS–P

[1] *See Initiation of Five-year (''Sunset'') Review,* 78 FR 72061 (December 2, 2013) (*Initiation Notice*) and *Diamond Sawblades and Parts Thereof From the People's Republic of China and the Republic of Korea: Antidumping Duty Orders,* 74 FR 57145 (November 4, 2009).

[2] *See* the Memorandum from Deputy Assistant Secretary Christian Marsh to Acting Assistant Secretary Ronald K. Lorentzen entitled ''Issues and Decision Memorandum for the Final Results of Expedited First Sunset Review of the Antidumping Duty Order on Diamond Sawblades and Parts Thereof from the People's Republic of China'' dated concurrently with and hereby adopted by this notice (Issues and Decision Memorandum).

DEPARTMENT OF COMMERCE

International Trade Administration

[A–821–801]

Solid Urea from the Russian Federation: Preliminary Results of Antidumping Duty Administrative Review; 2012–2013

AGENCY: Enforcement and Compliance, International Trade Administration, Department of Commerce.

SUMMARY: The Department of Commerce (the Department) is conducting an administrative review of the antidumping duty order on solid urea from the Russian Federation (Russia). The period of review (POR) is July 1, 2012, through June 30, 2013. The review covers one producer/exporter of the subject merchandise, MCC EuroChem (EuroChem). We preliminarily find that EuroChem has not sold subject merchandise at less than normal value during the POR. Interested parties are invited to comment on these preliminary results.

DATES: *Effective Date:* July 11, 2014.

FOR FURTHER INFORMATION CONTACT: Jerrold Freeman or Minoo Hatten, AD/CVD Operations, Office I, Enforcement and Compliance, International Trade Administration, U.S. Department of Commerce, 14th Street and Constitution Avenue NW., Washington, DC 20230; telephone: (202) 482–0180 or (202) 482–1690, respectively.

SUPPLEMENTARY INFORMATION:

Scope of the Order

The merchandise subject to the order is solid urea. The product is currently classified under the Harmonized Tariff Schedules of the United States (HTSUS) item number 3102.10.00.00. The HTSUS subheading is provided for convenience and customs purposes. A full description of the scope of the order is contained in the memorandum from Gary Taverman, Senior Advisor for Antidumping and Countervailing Duty Operations, to Ronald K. Lorentzen, Acting Assistant Secretary for Enforcement and Compliance, ''Decision Memorandum for Preliminary Results of Antidumping Duty Administrative Review: Solid Urea from the Russian Federation'' dated concurrently with this notice (Preliminary Decision Memorandum), which is hereby adopted by this notice. The written description is dispositive.

The Preliminary Decision Memorandum is a public document and is on file electronically *via* Enforcement and Compliance's Antidumping and Countervailing Duty Centralized

Electronic Service System (IA ACCESS). Access to IA ACCESS is available to registered users at *http://iaaccess.trade.gov,* and it is available to all parties in the Central Records Unit, room 7046 of the main Department of Commerce building. In addition, a complete version of the Preliminary Decision Memorandum can be accessed directly on the Internet at *http://enforcement.trade.gov/frn/index.html.* A list of the topics discussed in the Preliminary Decision Memorandum is attached as an Appendix to this notice. The signed Preliminary Decision Memorandum and the electronic versions of the Preliminary Decision Memorandum are identical in content.

Methodology

The Department conducted this review in accordance with section 751(a)(2) of the Tariff Act of 1930, as amended (the Act). Constructed export price is calculated in accordance with section 772 of the Act. Normal value is calculated in accordance with section 773 of the Act. For a full description of the methodology underlying our conclusions, *see* Preliminary Decision Memorandum.

Preliminary Results of the Review

As a result of this review, we preliminarily determine that a dumping margin of 0.00 percent exists for EuroChem for the period July 1, 2012, through June 30, 2013.

Disclosure and Public Comment

We intend to disclose the calculations performed to parties in this proceeding within five days of the date of publication of this notice in accordance with 19 CFR 351.224(b). Pursuant to 19 CFR 351.309(c), interested parties may submit cases briefs not later than 30 days after the date of publication of this notice. Rebuttal briefs, limited to issues raised in the case briefs, may be filed not later than five days after the date for filing case briefs.[1] Parties who submit case briefs or rebuttal briefs in this proceeding are encouraged to submit with each argument: (1) A statement of the issue; (2) a brief summary of the argument; and (3) a table of authorities.[2]

Pursuant to 19 CFR 351.310(c), interested parties who wish to request a hearing, or to participate if one is requested, must submit a written request to the Assistant Secretary for Enforcement and Compliance, filed electronically *via* IA ACCESS. An electronically filed document must be received successfully in its entirety by the Department's electronic records system, IA ACCESS, by 5 p.m. Eastern Time within 30 days after the date of publication of this notice.[3] Requests should contain: (1) The party's name, address and telephone number; (2) the number of participants; and (3) a list of issues to be discussed. Issues raised in the hearing will be limited to those raised in the respective case briefs.

The Department intends to issue the final results of this administrative review, including the results of its analysis of the issues raised in any written briefs, not later than 120 days after the date of publication of this notice, pursuant to section 751(a)(3)(A) of the Act.

Assessment Rates

Upon completion of the administrative review, the Department shall determine and U.S. Customs and Border Protection (CBP) shall assess antidumping duties on all appropriate entries. If EuroChem's weighted-average dumping margin is not zero or *de minimis* in the final results of this review, we will calculate importer-specific assessment rates on the basis of the ratio of the total amount of antidumping duties calculated for an importer's examined sales and the total entered value of such sales in accordance with 19 CFR 351.212(b)(1). If EuroChem's weighted-average dumping margin continues to be zero or *de minimis* in the final results of review, we will instruct CBP not to assess duties on any of its entries in accordance with the *Final Modification for Reviews, i.e.,* ''{w}here the weighted-average margin of dumping for the exporter is determined to be zero or *de minimis,* no antidumping duties will be assessed.''[4]

The Department clarified its ''automatic assessment'' regulation on May 6, 2003.[5] This clarification will apply to entries of subject merchandise during the POR produced by EuroChem for which it did not know its merchandise was destined for the United States. In such instances, we will instruct CBP to liquidate unreviewed entries at the all-others rate of 64.93 percent[6] if there is no rate for the intermediate company(ies) involved in the transaction.

We intend to issue instructions to CBP 15 days after publication of the final results of this review.

Cash Deposit Requirements

The following deposit requirements will be effective upon publication of the notice of final results of administrative review for all shipments of solid urea from Russia entered, or withdrawn from warehouse, for consumption on or after the date of publication as provided by section 751(a)(2) of the Act: (1) The cash deposit rate for EuroChem will be the rate established in the final results of this administrative review; (2) for previously reviewed or investigated companies not listed above, the cash deposit rate will continue to be the company-specific rate published for the most recently completed segment of this proceeding; (3) if the exporter is not a firm covered in this review, a prior review, or the original investigation but the manufacturer is, the cash deposit rate will be the rate established for the manufacturer of the merchandise for the most recently completed segment of this proceeding; (4) the cash deposit rate for all other manufacturers or exporters will continue to be 64.93 percent.[7] These cash deposit requirements, when imposed, shall remain in effect until further notice.

Notification to Importers

This notice serves as a preliminary reminder to importers of their responsibility under 19 CFR 351.402(f)(2) to file a certificate regarding the reimbursement of antidumping duties prior to liquidation of the relevant entries during this review period. Failure to comply with this requirement could result in the Secretary's presumption that reimbursement of antidumping duties occurred and the subsequent assessment of double antidumping duties.

We are issuing and publishing these results in accordance with sections 751(a)(1) and 777(i)(1) of the Act.

Dated: July 3, 2014.

Ronald K. Lorentzen,

Acting Assistant Secretary for Enforcement and Compliance.

Appendix

List of Topics Discussed in the Preliminary Decision Memorandum

A. Summary
B. Background
C. Scope of the Order

[1] *See* 19 CFR 351.309(d).

[2] *Id.,* and 19 CFR 351.303 (for general filing requirements).

[3] *See* 19 CFR 351.310(c).

[4] *See Antidumping Proceedings: Calculation of the Weighted-Average Dumping Margin and Assessment Rate in Certain Antidumping Proceedings: Final Modification,* 77 FR 8101, 8102 (February 14, 2012) (*Final Modification for Reviews*).

[5] For a full discussion of this clarification, *see Antidumping and Countervailing Duty Proceedings: Assessment of Antidumping Duties,* 68 FR 23954 (May 6, 2003) (*Assessment Policy Notice*).

[6] The all-others rate established in *Urea From the Union of Soviet Socialist Republics; Final Determination of Sales at Less Than Fair Value,* 52 FR 19557 (May 26, 1987).

[7] *See Id.*

D. Comparisons to Normal Value
1. Determination of Comparison Method
2. Results of the Differential Pricing Analysis
E. Product Comparisons
F. Date of Sale
G. Constructed Export Price
H. Normal Value
1. Home Market Viability as Comparison Market
2. Level of Trade
3. Calculation of Normal Value Based on Comparison Market Prices
I. Currency Conversion
J. Recommendation

[FR Doc. 2014–16313 Filed 7–10–14; 8:45 am]

BILLING CODE 3510–DS–P

DEPARTMENT OF COMMERCE

National Oceanic and Atmospheric Administration

RIN 0648–XD364

New England Fishery Management Council; Public Meeting

AGENCY: National Marine Fisheries Service (NMFS), National Oceanic and Atmospheric Administration (NOAA), Commerce.

ACTION: Notice; public meeting.

SUMMARY: The New England Fishery Management Council's (Council) Risk Policy Working Group will meet to consider actions affecting New England fisheries in the exclusive economic zone (EEZ).

DATES: The meeting will be held on Tuesday, July 29, 2014 at 10 a.m.

ADDRESSES: The meeting will be held at the Hampton Inn & Suites, 2100 Post Road, Warwick, RI; telephone: (401) 739–8888.

Council address: New England Fishery Management Council, 50 Water Street, Mill 2, Newburyport, MA 01950.

FOR FURTHER INFORMATION CONTACT: Thomas A. Nies, Executive Director, New England Fishery Management Council; telephone: (978) 465–0492.

SUPPLEMENTARY INFORMATION: The items of discussion in the committee and advisory panel's agenda are: The Risk Policy Working Group will continue the development of a risk policy to serve as guidance for ABC (acceptable biological catch) control rules and annual catch limits (ACLs) for Council-managed species. They will develop a Risk Policy Statement, to be reviewed by the Council's Scientific and Statistical Committee (SSC) in August and approved by the Council at its September 2014 meeting. Also on the agenda will be the review and discussion on baseline conditions related to overfishing definitions, ABC control rules, and harvest control rules in Council-managed FMPs. They will discuss the next steps for applying the Risk Policy Statement across Council-managed FMPs and address other business as necessary.

Although non-emergency issues not contained in this agenda may be discussed, those issues may not be the subject of formal action during this meeting. Action will be restricted to those issues specifically identified in this notice and any issues arising after publication of this notice that require emergency action under section 305(c) of the Magnuson-Stevens Fishery Conservation and Management Act, provided the public has been notified of the Council's intent to take final action to address the emergency.

Special Accommodations

This meeting is physically accessible to people with disabilities. Requests for sign language interpretation or other auxiliary aids should be directed to Thomas A. Nies (see **ADDRESSES**) at least 5 days prior to the meeting date.

Authority: 16 U.S.C. 1801 *et seq.*

Dated: July 8, 2014.

Tracey L. Thompson,

Acting Deputy Director, Office of Sustainable Fisheries, National Marine Fisheries Service.

[FR Doc. 2014–16214 Filed 7–10–14; 8:45 am]

BILLING CODE 3510–22–P

DEPARTMENT OF COMMERCE

National Oceanic and Atmospheric Administration

RIN 0648–XD373

Pacific Fishery Management Council; Public Meeting

AGENCY: National Marine Fisheries Service (NMFS), National Oceanic and Atmospheric Administration (NOAA), Commerce.

ACTION: Notice; public meeting.

SUMMARY: The Pacific Fishery Management Council's (Pacific Council) Highly Migratory Species Management Team (HMSMT) will hold a webinar, which is open to the public.

DATES: The HMSMT will hold the webinar on Tuesday, July 29, 2014 from 9 a.m. to noon, Pacific Time.

ADDRESSES: To attend the webinar, visit *http://www.joinwebinar.com*. Enter the Webinar ID: 493–503–175, and your name and email address (required). Once you have joined the webinar, choose either your computer's audio or select ''Use Telephone.'' If you do not select ''Use Telephone'' you will be connected to audio using your computer's microphone and speakers (VoIP). It is recommended that you use a computer headset, as GoToMeeting allows you to listen to the meeting using your computer headset and speakers. If you do not have a headset and speakers, you may use your telephone for the audio portion of the meeting by dialing this TOLL number 1–480–297–0021 (not a toll-free number); phone audio access code 861–856–225; audio phone pin shown after joining the webinar. System requirements for PC-based attendees: Required: Windows® 7, Vista, or XP; for Mac®-based attendees: Required: Mac OS® X 10.5 or newer; and for mobile attendees: Required: iPhone®, iPad®, Android™ phone or Android tablet (See the GoToMeeting Webinar Apps). You may also send an email to Mr. Kris Kleinschmidt or contact him at 503–820–2280 for technical assistance. A listening station will also be provided at the Pacific Council office.

Council address: Pacific Council, 7700 NE Ambassador Place, Suite 101, Portland, OR 97220–1384.

FOR FURTHER INFORMATION CONTACT: Dr. Kit Dahl, Pacific Council; telephone: (503) 820–2422.

SUPPLEMENTARY INFORMATION: The HMSMT will discuss the development of alternatives and analyses for issues to be addressed as part of the HMS biennial harvest specifications and management measures process. Of the issues identified at the June Pacific Council meeting, the Pacific Council assigned highest priority to reducing recreational catch of Pacific bluefin tuna and identifying take caps (''hard caps'') for selected protected species (marine mammals and sea turtles) for the California drift gillnet fishery. The HMSMT may also discuss exempted fishing permit review and monitoring requirements for proposed management measures. The HMSMT will report on their work at the September 12–17, 2014, Council meeting in Spokane, WA.

Public comments during the webinar will be received from attendees at the discretion of the HMSMT Chair.

Although non-emergency issues not contained in the meeting agenda may be discussed, those issues may not be the subject of formal action during this meeting. Action will be restricted to those issues specifically listed in this document and any issues arising after publication of this document that require emergency action under section 305(c) of the Magnuson-Stevens Fishery Conservation and Management Act, provided the public has been notified of the intent to take final action to address the emergency.

Special Accommodations

The meeting is physically accessible to people with disabilities. Requests for sign language interpretation or other auxiliary aids should be directed to Mr. Kris Kleinschmidt at (503) 820–2280 at least 5 days prior to the meeting date.

Dated: July 8, 2014.

Tracey L. Thompson,

Acting Deputy Director, Office of Sustainable Fisheries, National Marine Fisheries Service.

[FR Doc. 2014–16215 Filed 7–10–14; 8:45 am]

BILLING CODE 3510–22–P

DEPARTMENT OF COMMERCE

National Oceanic and Atmospheric Administration

RIN 0648–XD374

Gulf of Mexico Fishery Management Council; Public Meeting

AGENCY: National Marine Fisheries Service (NMFS), National Oceanic and Atmospheric Administration (NOAA), Commerce.

ACTION: Notice of a public meeting.

SUMMARY: The Gulf of Mexico Fishery Management Council (Council) will hold a meeting of the Reef Fish Advisory Panel.

DATES: The meeting will be held from 8 a.m. until 5 p.m. on Tuesday, July 29, 2014.

ADDRESSES: The meeting will be held at the Council's office.

Council address: Gulf of Mexico Fishery Management Council, 2203 North Lois Avenue, Suite 1100, Tampa, FL, 33607.

FOR FURTHER INFORMATION CONTACT: Dr. Carrie Simmons, Deputy Executive Director, Gulf of Mexico Fishery Management Council; telephone: (813) 348–1630; fax: (813) 348–1711; email: *carrie.simmons@gulfcouncil.org.*

SUPPLEMENTARY INFORMATION: The items of discussion on the agenda are as follows:

1. Adoption of Agenda
2. Election of Chair and Vice-chair
3. Approval of August 6–7, 2012 minutes
4. Action Guide
5. SEDAR 33 Stock Assessments Gag and Greater Amberjack—SSC Recommendations and Council Actions AP recommendations
6. Possible Greater Amberjack Size Limit and Closed Season Changes AP recommendations
7. Possible Red Grouper Bag Limit and Accountability Measure Changes AP recommendations
8. Update on Joint South Florida Management Options AP recommendations
9. Discussion of MRIP Methodology to Monitor Recreational Landings AP recommendations
10. Review SEDAR Assessment Schedule
11. Review and Evaluate the Role of Reef Fish AP
12. Other Business

For meeting materials see folder named ''Reef Fish AP meeting 07–29–2014'' on Gulf Council file server. To access the file server, the URL is *https://public.gulfcouncil.org:5001/webman/index.cgi,* or go to the Council's Web site and click on the FTP link in the lower left of the Council Web site (*http://www.gulfcouncil.org*). The username and password are both ''gulfguest''.

The Agenda is subject to change, and the latest version will be posted on the Council's file server, which can be accessed by going to the Council Web site at *http://www.gulfcouncil.org* and clicking on FTP Server under Quick Links. The meetings will be webcast over the internet. A link to the webcast will be available on the Council's Web site, *http://www.gulfcouncil.org.*

Although non-emergency issues not contained in this agenda may come before this group for discussion, those issues may not be the subject of formal action during this meeting. Action will be restricted to those issues specifically identified in this notice and any issues arising after publication of this notice that require emergency action under section 305(c) of the Magnuson-Stevens Fishery Conservation and Management Act, provided the public has been notified of the Council's intent to take final action to address the emergency.

These meetings are physically accessible to people with disabilities. Requests for sign language interpretation or other auxiliary aids should be directed to Kathy Pereira at the Council Office (see **ADDRESSES**), at least 5 working days prior to the meeting.

Note: The times and sequence specified in this agenda are subject to change.

Authority: 16 U.S.C. 1801 *et seq.*

Dated: July 8, 2014.

Tracey L. Thompson,

Acting Deputy Director, Office of Sustainable Fisheries, National Marine Fisheries Service.

[FR Doc. 2014–16216 Filed 7–10–14; 8:45 am]

BILLING CODE 3510–22–P

COMMITTEE FOR PURCHASE FROM PEOPLE WHO ARE BLIND OR SEVERELY DISABLED

Procurement List; Proposed Addition and Deletions

AGENCY: Committee for Purchase From People Who Are Blind or Severely Disabled.

ACTION: Proposed Addition to and Deletions from the Procurement List.

SUMMARY: The Committee is proposing to add a service to the Procurement List that will be provided by a nonprofit agency employing persons who are blind or have other severe disabilities, and deletes products previously furnished by such agencies.

DATES: *Comments Must Be Received On Or Before:* 8/11/2014.

ADDRESSES: Committee for Purchase From People Who Are Blind or Severely Disabled, 1401 S. Clark Street, Suite 10800, Arlington, Virginia, 22202–4149.

For Further Information or To Submit Comments Contact: Barry S. Lineback, Telephone: (703) 603–7740, Fax: (703) 603–0655, or email *CMTEFedReg@AbilityOne.gov.*

SUPPLEMENTARY INFORMATION: This notice is published pursuant to 41 U.S.C. 8503 (a)(2) and 41 CFR 51–2.3. Its purpose is to provide interested persons an opportunity to submit comments on the proposed actions.

Addition

If the Committee approves the proposed addition, the entities of the Federal Government identified in this notice will be required to procure the service listed below from the nonprofit agency employing persons who are blind or have other severe disabilities.

The following service is proposed for addition to the Procurement List for production by the nonprofit agency listed:

Service

Service Type/Location: Janitorial Service, U.S. Geological Survey, Illinois Water Science Center, 1201 W. University Avenue, Suite 100, Urbana, IL

NPA: United Cerebral Palsy of the Land of Lincoln, Springfield, IL

Contracting Activity: Dept of the Interior, Geological Survey, Eastern Region Acquisition and Grants Branch, Reston, VA

Deletions

The following products are proposed for deletion from the Procurement List:

Products

NSN: 2510–01–251–8548—Blanket, Insulation, Thermal, Vehicular

NSN: 2510–01–251–9995—Panel, Insulation, Vehicular, Interior Left Hand Front Tunnel
NSN: 2510–01–335–7363—Panel, Insulation, Vehicular, Interior Right Hand Front Tunnel
NSN: 2510–01–421–8067—Panel, Insulation, Vehicular, Cab
NPA: New York City Industries for the Blind, Inc., Brooklyn, NY
Contracting Activity: Defense Logistics Agency Land and Maritime, Columbus, OH

Label, Pressure-Sensitive Adhesive

NSN: 7530–00–577–4368
NSN: 7530–00–577–4369
NSN: 7530–00–577–4370
NSN: 7530–00–577–4371
NSN: 7530–00–577–4372
NSN: 7530–00–577–4376
NSN: 7530–00–982–0062
NSN: 7530–00–982–0064
NSN: 7530–00–982–0065
NSN: 7530–00–982–0066
NPA: North Central Sight Services, Inc., Williamsport, PA
Contracting Activity: General Services Administration, New York, NY
NSN: 8465–00–118–4956—Cover, Canteen, Water, Natural, 1 qt.
NPA: Lions Industries for the Blind, Inc., Kinston, NC
Contracting Activity: Defense Logistics Agency Troop Support, Philadelphia, PA

Barry S. Lineback,

Director, Business Operations.

[FR Doc. 2014–16232 Filed 7–10–14; 8:45 am]

BILLING CODE 6353–01–P

COMMITTEE FOR PURCHASE FROM PEOPLE WHO ARE BLIND OR SEVERELY DISABLED

Procurement List; Additions and Deletions

AGENCY: Committee for Purchase From People Who Are Blind or Severely Disabled.

ACTION: Additions to and Deletions from the Procurement List.

SUMMARY: This action adds products to the Procurement List that will be furnished by nonprofit agencies employing persons who are blind or have other severe disabilities, and deletes products from the Procurement List previously furnished by such agencies.

DATES: *Effective Date:* 8/11/2014.

ADDRESSES: Committee for Purchase From People Who Are Blind or Severely Disabled, 1401 S. Clark Street, Suite 10800, Arlington, Virginia, 22202–4149.

FOR FURTHER INFORMATION CONTACT: Barry S. Lineback, Telephone: (703) 603–7740, Fax: (703) 603–0655, or email *CMTEFedReg@AbilityOne.gov.*

SUPPLEMENTARY INFORMATION:

Additions

On 5/16/2014 (79 FR 28490–28491) and 6/6/2014 (79 FR 32716–32718), the Committee for Purchase From People Who Are Blind or Severely Disabled published notices of proposed additions to the Procurement List.

After consideration of the material presented to it concerning capability of qualified nonprofit agencies to provide the products and impact of the additions on the current or most recent contractors, the Committee has determined that the products listed below are suitable for procurement by the Federal Government under 41 U.S.C. 8501–8506 and 41 CFR 51–2.4.

Regulatory Flexibility Act Certification

I certify that the following action will not have a significant impact on a substantial number of small entities. The major factors considered for this certification were:

1. The action will not result in any additional reporting, recordkeeping or other compliance requirements for small entities other than the small organizations that will furnish the products to the Government.

2. The action will result in authorizing small entities to furnish the products to the Government.

3. There are no known regulatory alternatives which would accomplish the objectives of the Javits-Wagner-O'Day Act (41 U.S.C. 8501–8506) in connection with the products proposed for addition to the Procurement List.

End of Certification

Accordingly, the following products are added to the Procurement List:

Products

NSN: 7510–00–290–2026—Tape, Masking & Packaging, General Purpose
NPA: Cincinnati Association for the Blind, Cincinnati, OH
Contracting Activity: General Services Administration, New York, NY
Coverage: A-List for the Total Government Requirement as aggregated by the General Services Administration, New York, NY.

Dry Erase White Board

NSN: 7110–00–NIB–2207—Magnetic Porcelain Surface, Mahogany Finish, Top-Bottom-Side Rails, 36″ x 24″
NSN: 7110–01–334–7078—Magnetic Porcelain Surface, Oak Finish, 24″ x 18″
NSN: 7110–01–334–7081—Magnetic Porcelain Surface, Oak Finish, 60″ x 36″
Coverage: B-List for the Broad Government Requirement, as aggregated by the General Services Administration, Arlington, VA.
NSN: 7110–00–NIB–2201—Magnetic Porcelain Surface, Mahogany Finish, 36″ x 24″
NSN: 7110–00–NIB–2202—Magnetic Porcelain Surface, Mahogany Finish, 48″ x 36″
NSN: 7110–00–NIB–2203—Magnetic Porcelain Surface, Mahogany Finish, 72″ x 48″
NSN: 7110–00–NIB–2204—Melamine Surface, Oak Finish, 36″ x 24″
NSN: 7110–00–NIB–2205—Melamine Surface, Oak Finish, 48″ x 36″
NSN: 7110–00–NIB–2208—Magnetic Porcelain Surface, Mahogany Finish, Top-Bottom-Side, 48″ x 36″
NSN: 7110–00–NIB–2209—Magnetic Porcelain Surface, Mahogany Finish, Top-Bottom-Side Rails, 72″ x 48″
NSN: 7110–01–334–7079—Magnetic Porcelain Surface, Oak Finish, 36″ x 24″
NSN: 7110–01–334–7080—Magnetic Porcelain Surface, Oak Finish, 48″ x 36″
NSN: 7110–01–334–7082—Magnetic Porcelain Surface, Oak Finish, 72″ x 48″
Coverage: A-List for the Total Government Requirement, as aggregated by the General Services Administration, Arlington, VA.
NPA: The Lighthouse for the Blind, Inc. (Seattle Lighthouse), Seattle, WA
Contracting Activity: General Services Administration, FSS Household and Industrial Furniture, Arlington, VA
NSN: 5120–00–900–6103—Hammer—3 lb, Cross-Peen, 15″ Fiberglass Handle, Cushioned Grip
NPA: Keystone Vocational Services, Inc., Sharon, PA
Contracting Activity: General Services Administration, Kansas City, MO
Coverage: B-List for the Broad Government Requirement as aggregated by the General Services Administration, Kansas City, MO.
NSN: MR 896—Turner, Flexible, Thin, 11.5″ X 12″ X 4″
NSN: MR 335—Squeezer, Citrus, Aluminum
NSN: MR 332—Peeler, Corn
NSN: MR 331—Pitter, Cherry and Olive
NPA: Cincinnati Association for the Blind, Cincinnati, OH
NSN: MR 604—Drinking Straws, Flexible, Clear, 180ct
NSN: MR 10674—Funnel, Collapsible
NSN: MR 10679—Baster, Bottletop
NSN: MR 10663—Pouf Balls, Bath, Toddler
NPA: Winston-Salem Industries for the Blind, Inc., Winston-Salem, NC

NSN: MR 399—Set, Cookie Cutter, Assorted, 3PC
NPA: Industries for the Blind, Inc., West Allis, WI
Contracting Activity: Defense Commissary Agency, Fort Lee, VA
Coverage: C-List for the requirements of military commissaries and exchanges as aggregated by the Defense Commissary Agency, Fort Lee, VA.
NSN: 6850–01–560–6131—Calcium, Lime, and Rust Remover, 5 GL
NPA: The Lighthouse for the Blind, St. Louis, MO
Contracting Activity: Defense Logistics Agency Aviation, Richmond, VA
Coverage: A-List for the Total Government Requirement as aggregated by the Defense Logistics Agency Aviation, Richmond, VA.

Deletions

On 6/6/2014 (79 FR 32716–32718), the Committee for Purchase From People Who Are Blind or Severely Disabled published notice of proposed deletions from the Procurement List.

After consideration of the relevant matter presented, the Committee has determined that the products listed below are no longer suitable for procurement by the Federal Government under 41 U.S.C. 8501–8506 and 41 CFR 51–2.4.

Regulatory Flexibility Act Certification

I certify that the following action will not have a significant impact on a substantial number of small entities. The major factors considered for this certification were:

1. The action will not result in additional reporting, recordkeeping or other compliance requirements for small entities.
2. The action may result in authorizing small entities to furnish the products to the Government.
3. There are no known regulatory alternatives which would accomplish the objectives of the Javits-Wagner-O'Day Act (41 U.S.C. 8501–8506) in connection with the products deleted from the Procurement List.

End of Certification

Accordingly, the following products are deleted from the Procurement List:

Products

Ergo Aluminum Broom Handle & Mophead

NSN: 7920–01–503–1669
NSN: 7920–01–503–1670
NSN: 7920–01–503–1671
NSN: 7920–01–503–1672
NSN: 7920–01–503–5365
NSN: 7920–01–503–5366
NSN: 7920–01–503–5367
NPA: Industries for the Blind, Inc., West Allis, WI
Contracting Activities: Department Of Veterans Affairs, NAC, Hines, IL
General Services Administration, Fort Worth, TX

Barry S. Lineback,
Director, Business Operations.

[FR Doc. 2014–16231 Filed 7–10–14; 8:45 am]

BILLING CODE 6353–01–P

CONSUMER PRODUCT SAFETY COMMISSION

Announcement of Carbon Monoxide Safety Poster Contest Under the America COMPETES Reauthorization Act of 2011

AGENCY: U.S. Consumer Product Safety Commission. ACTION: Notice

SUMMARY: To raise awareness of the dangers of carbon monoxide in the home, the Consumer Product Safety Commission (CPSC) announces a poster contest for children in grades six, seven, and eight under section 105 of the America COMPETES Reauthorization Act of 2011, 15 U.S.C. 3719 (America COMPETES Act).

DATES: Entries will be accepted from July 14, 2014 until 11:59 p.m. EDT on February 27, 2015. CPSC expects to complete judging on or about May 1, 2015 and will award prizes soon thereafter.

FOR FURTHER INFORMATION CONTACT: Patty Davis, Public Affairs Specialist, Consumer Product Safety Commission, 4330 East West Highway, Bethesda, MD 20814; telephone (301) 504–7601; *pdavis@cpsc.gov*, or visit *www.cpsc.gov/COcontest*.

SUPPLEMENTARY INFORMATION: CPSC is charged with protecting the public from unreasonable risks of injury or death from thousands of types of consumer products under the agency's jurisdiction. CPSC has issued more than 13,000 consumer product recalls since the agency's creation in 1973.

To raise awareness of the danger of carbon monoxide (CO) gas, CPSC will administer a nationwide CO safety poster contest to help alert consumers, and children in particular, to the dangers of CO in the home.

Contest Requirements and Rules

1. *Subject of the Contest.* A key mission of the CPSC is to empower consumers with safety information. This contest seeks to help raise awareness about the dangers of CO in the home.

Potential topics include:

- how to recognize CO exposure and CO exposure symptoms;
- facts about CO: you cannot see it or smell it;
- what steps to take to protect against CO poisoning; and
- how to install and test a CO alarm.

2. *Eligibility.* To be eligible to participate in CPSC's CO Poster Contest and win a prize, a contestant must:

- be an individual who is a citizen or permanent resident of the United States;
- be in, or about to enter, the sixth, seventh, or eighth grade at the time of submission;
- not be a federal employee acting in the scope of the employee's employment;
- not be a child of a CPSC employee;
- not submit more than one poster;
- provide a completed and signed *Contest Submission and Parental Consent Form* (available on: www.cpsc.gov/COcontest);
- have complied with all requirements of this Notice, the official contest rules posted at: www.cpsc.gov/COcontest/, and all requirements of the America COMPETES Act.

The rules in this Notice supplement the rules on the *www.cpsc.gov/COcontest/* Web site. If there is a conflict between any requirement stated on *www.cpsc.gov/COcontest/* and the provisions of this Notice, the provisions of this Notice will govern. Entries must comply with form, content, eligibility, and other requirements set forth in this Notice and on the *www.cpsc.gov/COcontest/* Web site.

3. *How to Enter.* Contestants may submit entries between July 14, 2014 and February 27, 2015. Only one poster per contestant may be submitted; all entries must be received by CPSC not later than 11:59 p.m. EDT, February 27, 2015.

- Contestant must create the poster without assistance from others. The poster must not have been submitted to any prior CPSC poster contest or published previously. The poster must not contain any elements that violate a third party's copyright, trademark, or other intellectual property rights.
- Entries must consist of one piece of original artwork (poster) and a completed *Contest Submission and Parental Consent Form* submitted through the contest Web site at: *www.cpsc.gov/COcontest*. Uploaded files should be in the form of either a PDF or JPG, and each file must be no larger than one megabyte.
- Teachers are encouraged to submit poster entries for their students. However, to be eligible for a prize, each student must satisfy contest requirements, and each entry must include a completed and signed *Contest Submission and Parental Consent Form.*
- Once a poster is entered, a contestant cannot make any changes or

alterations to the poster. CPSC expects to complete judging on or about May 1, 2015.

• CPSC will not consider contest entries on topics other than carbon monoxide (CO).

• By submitting an entry (including the completed and signed *Contest Submission and Parental Consent Form*) to the contest, the contestant and the contestant's parent or guardian agrees to be bound by the contest's Official Rules. This contest is a skills-based contest. Chance plays no part in the determination of winners.

• To maintain privacy, a contestant should not put his or her full name or any personal information on the poster. CPSC will remove any identifying information on the poster.

• Sending a poster and completed *Contest Submission and Parental Consent Form* by the deadline constitutes ''registration to participate in the competition'' required by Section 105(g)(1) of the America COMPETES Act.

4. *Parent or Guardian's Consent.* All contestants must submit a completed *Contest Submission and Parental Consent Form.* On the form, parents or guardians must provide CPSC:

• permission for the contestant to enter the contest;

• an agreement that the contestant will abide by the contest rules;

• contact information to notify the parent or guardian if the contestant wins a prize;

• permission to collect, use, or disclose the contestant/child's personal information in accordance with the contest rules and applicable laws, including information necessary to issue and report any prize payments.

5. *Privacy.* CPSC will collect, use, and disclose the information submitted in accordance with the Privacy Act and/or E-Government Act of 2002. Information is not collected for commercial marketing.

6. *Children's Online Privacy.* The safety and privacy of children is CPSC's priority. CPSC complies with the Children's Online Privacy Protection Act of 1998 (COPPA) and COPPA's accompanying regulations protecting the privacy of children using the Internet.

CPSC requires verifiable parental consent via a *Contest Submission and Parental Consent Form* for all contestants and requires this consent before CPSC collects, uses, or discloses personal information about children under the age of 13. CPSC requires contestants to disclose the minimum amount of personal information necessary to participate in the contest. To enter the contest, CPSC only requires contestants to provide a full name, grade in school, and state of residence. CPSC will obtain full contact information about the contestant's parent or guardian, not the child contestant; contact information includes the parent or guardian's full name, address, telephone number, and email address. CPSC requires contest winners to provide a Social Security number to process prize payments. CPSC will contact a contestant only through a parent or guardian.

CPSC uses the personal information about a contestant to administer the contest. After obtaining parental consent via a *Contest Submission and Parental Consent Form,* CPSC will publish the contestant's poster, along with the contestant's first name, grade level, and state of residence. CPSC does not permit contestants to make any additional information publicly available and will not publish personal information about contestants beyond the information described above.

CPSC maintains reasonable procedures to protect the confidentiality, security, and integrity of personal information collected from children, as described in CPSC's Systems of Records Notice, Privacy Impact Assessment, and agency policies and directives. CPSC only discloses personal information as required by applicable laws and regulations.

Questions about these privacy policies should be directed to Patty Davis, CPSC Office of Communications at: *pdavis@cpsc.gov*.

At any time, a parent or guardian may review or have deleted the contestant's personal information from CPSC records and may refuse to permit further collection or use of the contestant's information by contacting the contest administrator at: *pdavis@cpsc.gov*.

7. *Prizes.* CPSC will award:

• three 6th grade winners, a cash award of $500 each

• three 7th grade winners, a cash award of $500 each

• three 8th grade winners, a cash award of $500 each

• one winner, chosen by public vote on CPSC's Web site, a cash award of $500

• one grand prize winner picked from all winners, a cash award of $1,000.

One poster may win multiple prizes. Winners shall be responsible for paying any applicable federal, state, or local taxes. CPSC will pay prize money directly to the winner or winners. Each winner must provide CPSC with sufficient information to issue payments in accordance with CPSC fiscal policy and issue an Internal Revenue Service Form 1099. CPSC will not issue prize payments without sufficient information to issue payments in compliance with CPSC fiscal policy and federal law. Winners may not transfer, assign, or substitute any prize.

CPSC may print, reproduce, or display winning posters publicly in print, online on the CPSC's Web site, and online on other safety partners' Web sites.

8. *Judges.* The posters will be judged by a qualified panel selected by CPSC at CPSC's sole discretion. CPSC retains the right to add or remove judges at any time before the winners are announced. Contest judges may include people from outside CPSC, including individuals from the private sector. The panel of judges will select the winning posters based on the criteria identified below. Judges have the right to withdraw from judging the contest entries without advance notice.

Judges may not:

• have personal or financial interests in, or be an employee, officer, director, or agent of, any entity that is a registered contestant in this contest;

• have a familial or financial relationship with an individual who is a registered contestant; or

• have any matter pending before CPSC or represent anyone in any matter pending before CPSC.

Specific tasks related to the judging process may be delegated to CPSC employees or employees of a collaborating agency. Judges shall have the authority to disregard any minor error in an entry that does not create any substantial benefit or detriment to any contestant. Decisions made by the judges are final.

9. *Judging Criteria.*

• clarity of CO safety message

• visual appeal of poster

• design originality.

10. *Contest Subject to Applicable Law.* The contest is subject to all applicable federal laws and regulations. By submitting an entry to the contest, the contestant and the contestant's parent or guardian agrees to be bound by these Official Rules and administrative decisions, which are final and binding in all matters relating to the contest. Eligibility for a contest prize is contingent upon fulfilling all of the requirements of the Official Rules. The final award of prizes is contingent upon the availability of appropriations.

11. *No CPSC Logo.* The poster must not use CPSC's logo or official seal and must not claim federal government endorsement.

12. *Copyright/Original Work.* Each contestant, through the contestant's parent or guardian, represents and

warrants that the contestant is the sole author and owner of the poster; that the poster is wholly original with the contestant; and that the poster does not infringe any copyright or any other rights of any third party of which the contestant is aware.

13. *Intellectual Property.* By entering a poster in the contest, each contestant and the contestant's parent or guardian grants to the CPSC an irrevocable, paid-up, royalty-free, nonexclusive worldwide and perpetual license to use, copy, distribute to the public, create derivative works from, link to, display publicly (on the Internet or otherwise), and grant sublicenses to the poster, indefinitely, starting on the date the poster is entered into the contest. All contestants will retain all other intellectual property rights over their posters.

14. *Payment of Prizes, Use of Prize Money, and Post-Award Performance.*

• Prize money will be paid after the announcement of the winners.

• CPSC will pay prize money directly to the winner or winners. Each winner must provide CPSC with sufficient information to issue payments in accordance with CPSC fiscal policy and issue an Internal Revenue Service Form 1099.

15. *Verification of Contest Winners.* All contestants must continue to comply with all terms and conditions of the Official Rules, and winning is contingent upon fulfilling all requirements contained in the Official Rules and this Notice. The parent or guardian of the winner(s) will be notified by email, telephone, or mail, after the date of the judging, using the information provided by the parent or guardian to CPSC. The end date for judging is an approximation and may change, depending on the number of entries. The contest winner(s) will be required to sign and return to CPSC, within ten (10) calendar days after the date that notice is sent, an Affidavit of Eligibility and Liability/Publicity Release (except where prohibited) to claim any prize or recognition. If a contest winner is disqualified for any reason, CPSC may award the applicable recognition and prize to an alternate winner selected by the judges from the remaining eligible entries.

16. *Limitation of Liability.* By submitting an entry to the contest, all contestants and parents or guardians of the contestants agree to, and thereby do, release, discharge, and hold harmless the government and its employees, agents, contractors, and representatives (except in the case of willful misconduct) from any claims, losses, and damages arising out of their participation in this contest or any contest-related activities and the acceptance and use, misuse, or possession of any prize awarded hereunder, including claims for injury, death, damage, or loss of property, revenue, or profits, whether direct, indirect, or consequential, arising from their participation in the contest, whether the injury, death, damage, or loss arises through negligence, or otherwise. Contestants will not be required to waive claims against CPSC that arise from the unauthorized use or disclosure by the agency of the intellectual property, trade secrets, or confidential information of the contestant. The contestant and his or her parent or guardian shall be liable for, and shall indemnify and hold harmless, the U.S. government against all actions or claims for loss of, or damage to, property resulting from the fault, negligence, or wrongful act or omission of the contestant.

17. *Liability Insurance.* Contestants will not be required to obtain liability insurance or demonstrate financial responsibility for claims by: (1) A third party for death, bodily injury, or property damage, or loss resulting from activity carried out in connection with the participation in the competition, with the federal government named as an additional insured under the registered contestant's insurance policy and registered contestants agreeing to indemnify the federal government against third party claims for damages arising from or related to competition activities; and (2) the federal government for damage or loss to government property resulting from such an activity.

18. *Records Retention and Freedom of Information Act.* All materials submitted as part of a contest entry (including the poster and the *Contest Submission and Parental Consent Form*) become CPSC records and will not be returned. No confidential information will be accepted with any contest entry. Contestants will be notified of any Freedom of Information Act requests for their contest entries in accordance with applicable law.

19. *General Conditions.* This contest is void where prohibited. Contestants agree that this contest shall be subject to, and governed by, the laws of the District of Columbia, and the forum for any dispute shall be in the District of Columbia, United States of America. To the extent permitted by law, the right to litigate, to seek injunctive relief, or to make any other recourse to judicial or any other procedure in case of disputes or claims resulting from, or in connection with this contest, are hereby excluded, and any contestant expressly waives any and all such rights. Certain restrictions may apply. CPSC, in consultation with the judges, reserves the right, in CPSC's discretion, not to make an award in one or more categories, based on factors such as quality, quantity, or nature of eligible entries. CPSC reserves the right to cancel, suspend, and/or modify the contest, or any part of the contest, for any reason, at CPSC's sole discretion.

All decisions by CPSC are final and binding in all matters related to the contest.

20. *Procedures for obtaining additional information.*

• During the period of the CO Safety Poster Contest, CPSC will respond to questions submitted to *COcontest@cpsc.gov* from potential contestants.

• CPSC employees will respond to all questions submitted to *COcontest@cpsc.gov* on an equitable basis. CPSC's responses to questions submitted to *COcontest@cpsc.gov* are not official guidance.

• CPSC will not permit any contestant to use federal facilities during the contest.

Authority: 15 U.S.C. 3719

Dated: July 8, 2014.

Todd A. Stevenson,

Secretary, Consumer Product Safety Commission.

[FR Doc. 2014–16204 Filed 7–10–14; 8:45 am]

BILLING CODE 6355–01–P

CORPORATION FOR NATIONAL AND COMMUNITY SERVICE

Proposed Information Collection; Comment Request

AGENCY: Corporation for National and Community Service.

ACTION: Notice.

SUMMARY: The Corporation for National and Community Service (CNCS), as part of its continuing effort to reduce paperwork and respondent burden, conducts a pre-clearance consultation program to provide the general public and federal agencies with an opportunity to comment on proposed and/or continuing collections of information in accordance with the Paperwork Reduction Act of 1995 (PRA95) (44 U.S.C. 3506(c)(2)(A)). This program helps to ensure that requested data can be provided in the desired format, reporting burden (time and financial resources) is minimized, collection instruments are clearly understood, and the impact of collection requirement on respondents can be properly assessed.

Currently, CNCS is soliciting comments concerning its proposed renewal of the Disaster Response Cooperative Agreement (DRCA) application. The DRCA enables CNCS supported national service organizations to engage members and participants in disaster response efforts to disaster events and to be eligible to be reimbursed for expenses incurred while engaged in such efforts. This document describes eligibility criteria, the nature of disaster deployments, CNCS's expectations for performance upon selection, and the application process. Also included are supporting forms and templates that are part of the deployment and reimbursement process. This agreement is the legal instrument by which organizations can be reimbursed by CNCS for expenses incurred by a disaster response, when it occurs under authority of a Mission Assignment from FEMA or another agency. National service organizations must have an approved and current DRCA in order to be reimbursed for a CNCS authorized disaster deployment.

Copies of the information collection request can be obtained by contacting the office listed in the Addresses section of this Notice.

DATES: Written comments must be submitted to the individual and office listed in the **ADDRESSES** section by September 9, 2014.

ADDRESSES: You may submit comments, identified by the title of the information collection activity, by any of the following methods:

(1) By mail sent to: Corporation for National and Community Service, Corporation for National and Community Service; Attention Kelly DeGraff, Senior Advisor, Disaster Services, Room 9607; 1201 New York Avenue NW., Washington, DC 20525.

(2) By hand delivery or by courier to the CNCS mailroom at Room 8100 at the mail address given in paragraph (1) above, between 9:00 a.m. and 4:00 p.m. Eastern Time, Monday through Friday, except Federal holidays.

(3) Electronically through *www.regulations.gov.* Individuals who use a telecommunications device for the deaf (TTY–TDD) may call 1–800–833–3722 between 8:00 a.m. and 8:00 p.m. Eastern Time, Monday through Friday.

FOR FURTHER INFORMATION CONTACT: Kelly DeGraff, 202–606–6817, or by email at your *kdegraff@cns.gov.*

SUPPLEMENTARY INFORMATION:

CNCS is particularly interested in comments that:

- Evaluate whether the proposed collection of information is necessary for the proper performance of the functions of CNCS, including whether the information will have practical utility;
- Evaluate the accuracy of the agency's estimate of the burden of the proposed collection of information, including the validity of the methodology and assumptions used;
- Enhance the quality, utility, and clarity of the information to be collected; and
- Minimize the burden of the collection of information on those who are expected to respond, including the use of appropriate automated, electronic, mechanical, or other technological collection techniques or other forms of information technology (e.g., permitting electronic submissions of responses).

Background

The information collected will be used to help CNCS more effectively utilize its deployable resources to meet the needs of disaster affected communities. A better understanding of the participating programs will allow CNCS to match the capabilities of the programs to the needs of the communities and will allow better asset mapping and resource typing. Additionally, the information collected will allow CNCS to conduct better outreach to interested programs by providing them with more information about CNCS disaster procedures, reimbursement requirements, and support services offered.

The additional tools and forms under the DRCA will allow for effective information collection during a disaster event as well as assess the capacity of all DRCA programs throughout the year. Information will be collected electronically through completion of the forms and emailed to CNCS.

Current Action

CNCS seeks to renew the current information collection. The revisions are intended to streamline the application process and ensure interested programs meet the appropriate programmatic and fiscal requirements to successfully execute disaster response activities. Additionally, the supporting forms will help CNCS identify and deploy programs more effectively and efficiently, matching the capabilities of the programs to the needs of the communities requesting assistance.

The information collection will otherwise be used in the same manner as the existing application. CNCS also seeks to continue using the current application until the revised application is approved by OMB. The current application is due to expire on March 31, 2015.

Type of Review: Renewal.

Agency: Corporation for National and Community Service.

Title: Disaster Response Cooperative Agreement.

OMB Number: 3045–0133.

Agency Number: None.

Affected Public: Current grantees and CNCS-supported programs.

Total Respondents: 100.

Frequency: Varies, see chart.

Average Time per Response: Varies, see chart.

Estimated Total Burden Hours: 4,970.

Total Burden Cost (capital/startup): None.

TOTAL BURDEN COST (OPERATING/MAINTENANCE): NONE

Instrument	Frequency per year	Respondents	Time per response (hours)	Total time per instrument
DRCA Application	1	40	8	320
DRT Quarterly Capacity Assessment	4	25	1	100
CNCS Disaster Budget and Deployment Form	5	25	1	125
CNCS Disaster Budget and Deployment Amendment Form	5	25	1	125
CNCS National Service Daily Situation Report	150	25	1	3750
CNCS National Service Daily Situation Report Full Guidance	1	25	2	50
CNCS Disaster Deployment After Action Report	5	25	2	250
CNCS–FEMA Mission Assignment Reimbursement Form	5	25	2	250
Total	176	215	18	4970

Comments submitted in response to this notice will be summarized and/or included in the request for Office of Management and Budget approval of the information collection request; they will also become a matter of public record.

Dated: July 8, 2014.

Kelly DeGraff,

Senior Advisor, Disaster Services Unit.

[FR Doc. 2014–16283 Filed 7–10–14; 8:45 am]

BILLING CODE 6050–28–P

DEPARTMENT OF DEFENSE

Office of the Secretary

[Docket ID DoD–2014–OS–0105]

Privacy Act of 1974; System of Records

AGENCY: Defense Health Agency, DoD.

ACTION: Notice to add a new System of Records.

SUMMARY: The Defense Health Agency is proposing to establish a new system of records, EDHA 25 DoD, entitled ''Enterprise Blood Management System (EBMS)'' in its inventory of record systems subject to the Privacy Act of 1974, as amended. This system will be used to obtain information from individuals donating blood in order to identify and verify donor demographics; determine donor suitability; associate donors to blood collections for testing; and create records necessary to identify and notify recipients of potential or known infectious blood units. Information collected is also used to determine the suitability of voluntary blood donations, record time of blood donation, and blood type; administer the Armed Services Blood Program (ASBP); and in some instances, recommend medical treatment for prospective blood donors.

DATES: Comments will be accepted on or before August 11, 2014. This proposed action will be effective on the day following the end of the comment period unless comments are received which result in a contrary determination.

ADDRESSES: You may submit comments, identified by docket number and title, by any of the following methods:

* *Federal Rulemaking Portal: http://www.regulations.gov.*

Follow the instructions for submitting comments.

* *Mail:* Federal Docket Management System Office, 4800 Mark Center Drive, East Tower, 2nd Floor, Suite 02G09, Alexandria, VA 22350–3100.

Instructions: All submissions received must include the agency name and docket number for this **Federal Register** document. The general policy for comments and other submissions from members of the public is to make these submissions available for public viewing on the Internet at *http://www.regulations.gov* as they are received without change, including any personal identifiers or contact information.

FOR FURTHER INFORMATION CONTACT: Ms. Linda S. Thomas, Chief, Defense Health Agency Privacy and Civil Liberties Office, 7700 Arlington Boulevard, Suite 5101, Falls Church, VA 22042–5101, or by phone at (703) 681–7500.

SUPPLEMENTARY INFORMATION: The Defense Health Agency notices for systems of records subject to the Privacy Act of 1974 (5 U.S.C. 552a), as amended, have been published in the **Federal Register** and are available from the address in **FOR FURTHER INFORMATION CONTACT** or at the Defense Privacy and Civil Liberties Office Web site *http://dpclo.defense.gov/*.

The proposed system report, as required by 5 U.S.C. 552a(r) of the Privacy Act of 1974, as amended, was submitted on July 1, 2014, to the House Committee on Oversight and Government Reform, the Senate Committee on Governmental Affairs, and the Office of Management and Budget (OMB) pursuant to paragraph 4c of Appendix I to OMB Circular No. A–130, ''Federal Agency Responsibilities for Maintaining Records About Individuals,'' dated February 8, 1996 (February 20, 1996, 61 FR 6427).

Dated: July 8, 2014.

Aaron Siegel,

Alternate OSD Federal Register Liaison Officer, Department of Defense.

EDHA 25 DoD

SYSTEM NAME:

Enterprise Blood Management System (EBMS)

SYSTEM LOCATION:

Primary location: Enterprise Infrastructure (EI) Military Health System (MHS) Enterprise Services Operations Center (MESOC) San Antonio, 300 Convent Street, Suite 1800, San Antonio, TX 78205–3742.

SECONDARY LOCATIONS:

Enterprise Infrastructure (EI) Military Health System (MHS) Enterprise Services Operations Center (MESOC) Aurora, 16401 East Centretech Parkway, Aurora, CO 80011–9066.

For a complete listing of all system location addresses, contact the system manager.

CATEGORIES OF INDIVIDUALS COVERED BY THE SYSTEM:

Donors: Any member of the Armed Services, Department of Defense (DoD) civilian employees (including non-appropriated fund employees), DoD contractors, federal employees from other federal agencies, civilians, and foreign nationals donating blood at one or more DoD blood donor collection sites.

Recipients: Armed Services medical beneficiaries who receive or have received medical care at one or more DoD medical treatment facilities and who have a need for a blood services encounter; and DoD civilian employees (including non-appropriated fund employees), federal employees from other federal agencies, contractors, civilians, and foreign nationals who receive or have received care at one or more DoD medical treatment facilities and who have a need for a blood services encounter.

CATEGORIES OF RECORDS IN THE SYSTEM:

Donors: Name; date of birth; Social Security Number (SSN) and/or DoD Identification (DoD ID) number; in the case of a foreign national, the foreign national number assigned to that individual; donor family member prefix and/or sponsor SSN or DoD ID number; gender; race/ethnicity; contact phone number(s); home address; personal email address; medical history; current health and disability information; and employment information (including, for donors who are Armed Services members, the donor's organization, station, and duty phone), and previous donation history.

Recipients: Individual's name and other name(s) used, date of birth, SSN and/or DoD ID number, gender, race/ethnicity, medical information, and recipient's previous donation history (if any).

AUTHORITY FOR MAINTENANCE OF THE SYSTEM:

10 U.S.C. Chapter 55, Medical and Dental Care; 32 CFR Part 199, Civilian Health and Medical Program of the Uniformed Services (CHAMPUS); DoD Directive 6000.12E, Health Service Support; DoD Instruction (DoDI) 6015.23, Delivery of Healthcare at Military Treatment Facilities: Foreign Service Care; Third-Party Collection; Beneficiary Counseling and Assistance Coordinators (BCACs); DoDI 6480.04, Armed Services Blood Program Operational Procedures; and E.O. 9397 (SSN), as amended.

PURPOSE(S):

To obtain information from individuals donating blood in order to

identify and verify donor demographics; determine donor suitability; associate donors to blood collections for testing; and create records necessary to identify and notify recipients of potential or known infectious blood units. Information collected is also used to determine the suitability of voluntary blood donations, record time of blood donation, and blood type; administer the Armed Services Blood Program (ASBP); and in some instances, recommend medical treatment for prospective blood donors.

To permit verification and authentication of the individuals receiving blood transfusions.

To trace blood units and blood products that are unsuitable to transfer, and previous units donated by the same donor, for review and possible recipient notifications.

To obtain information on individuals receiving blood transfusions through the ASBP, and the donor(s) of that blood for use in an automated and standardized quality information system to ensure the safety and quality of the blood supply in support of the Military Health System's medical readiness and healthcare treatment activities.

Routine uses of records maintained in the system, including categories of users and the purposes of such uses:

In addition to those disclosures generally permitted under 5 U.S.C. 552a(b) of the Privacy Act of 1974, as amended, these records may be specifically disclosed outside the DoD as a routine use pursuant to 5 U.S.C. 552a(b)(3) as follows:

To the Department of Health and Human Services (HHS) and its components for the purpose of conducting research and analytical projects, and to facilitate collaborative research activities between DoD and HHS.

To the Department of Veterans Affairs (VA) for the purpose of providing medical care to former Armed Services members and retirees and facilitating collaborative research activities between the DoD and VA.

To the National Research Council, National Academy of Sciences, and similar institutions for authorized health research in the interest of the Federal Government and the public.

To other federal, local, and state government agencies for compliance with federal, state, and local laws and regulations governing blood supply safety, control of communicable diseases, preventive medicine and safety, and other public health and welfare mandates relating to blood supplies.

To federal offices and agencies involved in the documentation and review of defense occupational and environmental exposure data.

The DoD Blanket Routine Uses may apply to this system of records, except as stipulated in the Notes below.

Note 1: This system of records contains individually identifiable health information. The DoD Health Information Privacy Regulation (DoD 6025.18–R) or any successor DoD issuances implementing the Health Insurance Portability and Accountability Act of 1996 (HIPAA) and 45 CFR Parts 160 and 164, Health and Human Services, General Administrative Requirements and Security & Privacy, respectively, within the DoD applies to most such health information. DoD 6025.18–R or any successor issuance may place additional procedural requirements on the uses and disclosures of such information beyond those found in the Privacy Act of 1974, as amended, or mentioned in this system of records notice.

Note 2: Except as provided under 42 U.S.C. 290dd-2, records of identity, diagnosis, prognosis or treatment of any patient maintained in connection with the performance of a program or activity relating to substance abuse education, prevention, training, treatment, rehabilitation, or research which is conducted, regulated, or directly or indirectly assisted, by a department or agency of the United States, will be treated as confidential and disclosed only for the purposes and under the circumstances expressly authorized in 42 U.S.C. 290dd-2.

POLICIES AND PRACTICES FOR STORING, RETRIEVING, ACCESSING, RETAINING, AND DISPOSING OF RECORDS IN THE SYSTEM:

STORAGE:

Electronic storage media.

RETRIEVABILITY:

Donor: Donor name, SSN and/or DoD ID number, and date of birth.

Recipient: Recipient name, SSN and/or DoD ID number, and date of birth.

SAFEGUARDS:

Systems are maintained in controlled areas accessible only to authorized personnel. Entry into these areas is restricted to those personnel with a valid requirement and authorization to enter. Physical entry is restricted by the use of locks, passwords which are changed periodically, and administrative procedures.

The system provides two-factor authentication including Common Access Cards with pin number and user ID/passwords. Access to personal information is restricted to those who require the data in the performance of their official duties. All personnel whose official duties require access to the information are trained in the proper safeguarding and use of the information.

RETENTION AND DISPOSAL:

Disposition pending (treat records as permanent until the National Archives and Records Administration has approved the retention and disposal schedule).

SYSTEM MANAGER(S) AND ADDRESS:

EBMS Program Manager, Defense Health Clinical Systems (DHCS)/Deployment and Readiness System (D&RS), 5109 Leesburg Pike, Skyline 6, Suite 817, Falls Church, VA 22041–3240.

NOTIFICATION PROCEDURE:

Individuals seeking to determine whether information about themselves is contained in this system of records should address written inquiries to the Chief, Freedom of Information Act (FOIA) Service Center, Defense Health Agency Privacy and Civil Liberties Office, 7700 Arlington Boulevard, Suite 5101, Falls Church, VA 22042–5101.

Requests should contain the name and number of this system of records notice, the individual's full name, current address, telephone number, and signature.

If requesting information about a minor or legally incompetent person, the request must be made by the custodial parent, legal guardian, or party acting in loco parentis of such individual. Written proof of that status may be required before the existence of any information will be confirmed.

RECORD ACCESS PROCEDURES:

Individuals seeking access to information about themselves contained in this system of records should address written inquiries to the Chief, FOIA Service Center, Defense Health Agency Privacy and Civil Liberties Office, 7700 Arlington Boulevard, Suite 5101, Falls Church, VA 22042–5101.

Requests should contain the name and number of this system of records notice, the individual's full name, current address, telephone number, and signature.

If requesting records about a minor or legally incompetent person, the request must be made by the custodial parent, legal guardian, or party acting in loco parentis of such individual. Written proof of that status may be required before any records will be provided.

CONTESTING RECORD PROCEDURES:

The Office of the Secretary of Defense (OSD) rules for accessing records, for contesting contents and appealing initial agency determinations are published in OSD Administrative Instruction 81, 32 CFR Part 311, or may be obtained from the system manager.

RECORD SOURCE CATEGORIES:

Individuals, information printed on blood samples, the Composite Health Care System, and AHLTA.

EXEMPTIONS CLAIMED FOR THE SYSTEM:

None.

[FR Doc. 2014–16208 Filed 7–10–14; 8:45 am]

BILLING CODE 5001–06–P

DEPARTMENT OF DEFENSE

Office of the Secretary

[Docket ID DoD–2014–OS–0107]

Privacy Act of 1974; System of Records

AGENCY: Defense Intelligence Agency, DoD.

ACTION: Notice to delete a System of Records.

SUMMARY: The Defense Intelligence Agency is deleting a system of records notice from its existing inventory of records systems subject to the Privacy Act of 1974, as amended. The system notice is entitled ''LDIA 10–0001, Equal Opportunity, Diversity and Alternate Dispute Resolution Records''.

DATES: Comments will be accepted on or before August 11, 2014. This proposed action will be effective the date following the end of the comment period unless comments are received which result in a contrary determination.

ADDRESSES: You may submit comments, identified by docket number and title, by any of the following methods:

* *Federal Rulemaking Portal: http://www.regulations.gov.*

Follow the instructions for submitting comments.

* *Mail:* Federal Docket Management System Office, 4800 Mark Center Drive, East Tower, 2nd Floor, Suite 02G09, Alexandria, VA 22350–3100.

Instructions: All submissions received must include the agency name and docket number for this **Federal Register** document. The general policy for comments and other submissions from members of the public is to make these submissions available for public viewing on the Internet at *http://www.regulations.gov* as they are received without change, including any personal identifiers or contact information.

FOR FURTHER INFORMATION CONTACT: Ms. Theresa Lowery, DIA Privacy Act Compliance Officer, DAN 1C, 200 MacDill Blvd., Washington, DC 20340–0001; telephone (202) 231–1193.

SUPPLEMENTARY INFORMATION: The Defense Intelligence Agency systems of records notices subject to the Privacy Act of 1974 (5 U.S.C. 552a), as amended, have been published in the **Federal Register** and are available from the address in **FOR FURTHER INFORMATION CONTACT** or at the Defense Privacy and Civil Liberties Office Web site at *http://dpclo.defense.gov/.*

The proposed deletion is not within the purview of subsection (r) of the Privacy Act of 1974 (5 U.S.C. 552a), as amended, which requires the submission of a new or altered system report.

Dated: July 8, 2014.

Aaron Siegel,

Alternate OSD Federal Register Liaison Officer, Department of Defense.

Deletion
LDIA 10–0001

SYSTEM NAME:

Equal Opportunity, Diversity and Alternate Dispute Resolution Records (June 15, 2010, 75 FR 33792)

REASON:

The records contained in this system of records have been migrated into the Conflict Management Programs system LDIA 13–0001 (November 20, 2013, 78 FR 69651). Therefore LDIA 10–0001, Equal Opportunity, Diversity and Alternate Dispute Resolution Records can be deleted.

[FR Doc. 2014–16251 Filed 7–10–14; 8:45 am]

BILLING CODE 5001–06–P

DEPARTMENT OF DEFENSE

Office of the Secretary

[Docket ID DoD–2014–OS–0103]

Privacy Act of 1974; System of Records

AGENCY: Defense Information Systems Agency, DoD.

ACTION: Notice to amend a System of Records.

SUMMARY: The Defense Information Systems Agency is amending a system of records notice, K890.16, entitled ''Enterprise Mission Assurance Support Service (EMASS)'' in its existing inventory of record systems subject to the Privacy Act of 1974, as amended. This notice is being amended to add ''DoD'' to the system ID, as it is a DoD-wide system.

DATES: Comments will be accepted on or before August 11, 2014. This proposed action will be effective the day following the end of the comment period unless comments are received which result in a contrary determination.

ADDRESSES: You may submit comments, identified by docket number and title, by any of the following methods:

* *Federal Rulemaking Portal: http://www.regulations.gov.* Follow the instructions for submitting comments.

* *Mail:* Federal Docket Management System Office, 4800 Mark Center Drive, East Tower, 2nd Floor, Suite 02G09, Alexandria, VA 22350–3100.

Instructions: All submissions received must include the agency name and docket number for this **Federal Register** document. The general policy for comments and other submissions from members of the public is to make these submissions available for public viewing on the Internet at *http://www.regulations.gov* as they are received without change, including any personal identifiers or contact information.

FOR FURTHER INFORMATION CONTACT: Ms. Jeanette Weathers-Jenkins, DISA Privacy Officer, Chief Information Office, 6916 Cooper Avenue, Fort Meade, MD 20755–7901, or by phone at (301)225–8158.

SUPPLEMENTARY INFORMATION: The Defense Information Systems Agency systems of records notices subject to the Privacy Act of 1974 (5 U.S.C. 552a), as amended, have been published in the **Federal Register** and are available from the address in **FOR FURTHER INFORMATION CONTACT** or at *http://dpclo.defense.gov/.*

The proposed change to the record system being amended is set forth below. The proposed amendment is not within the purview of subsection (r) of the Privacy Act of 1974 (5 U.S.C. 552a), as amended, which requires the submission of a new or altered system report.

Dated: July 7, 2014.

Aaron Siegel,

Alternate OSD Federal Register Liaison Officer, Department of Defense.

K890.16

SYSTEM NAME:

Enterprise Mission Assurance Support Service (EMASS) (January 30, 2014, 79 FR 4889)

* * * * *

Change system ID to read ''K890.16 DoD''.

* * * * *

[FR Doc. 2014–16178 Filed 7–10–14; 8:45 am]

BILLING CODE 5001–06–P

DEPARTMENT OF DEFENSE

Office of the Secretary

[Docket ID DoD–2014–OS–0106]

Privacy Act of 1974; System of Records

AGENCY: Defense Intelligence Agency, DoD.

ACTION: Notice to delete a System of Records.

SUMMARY: The Defense Intelligence Agency is deleting a system of records notice from its existing inventory of records systems subject to the Privacy Act of 1974 (5 U.S.C. 552a), as amended. The system notice is entitled ''LDIA 0014, Employee Grievance Files''.

DATES: Comments will be accepted on or before August 11, 2014. This proposed action will be effective the date following the end of the comment period unless comments are received which result in a contrary determination.

ADDRESSES: You may submit comments, identified by docket number and title, by any of the following methods:

* *Federal Rulemaking Portal: http://www.regulations.gov.* Follow the instructions for submitting comments.

* *Mail:* Federal Docket Management System Office, 4800 Mark Center Drive, East Tower, 2nd Floor, Suite 02G09, Alexandria, VA 22350–3100.

Instructions: All submissions received must include the agency name and docket number for this **Federal Register** document. The general policy for comments and other submissions from members of the public is to make these submissions available for public viewing on the Internet at *http://www.regulations.gov* as they are received without change, including any personal identifiers or contact information.

FOR FURTHER INFORMATION CONTACT: Ms. Theresa Lowery, DIA Privacy Act Compliance Officer, DAN 1C, 200 MacDill Blvd., Washington, DC 20340–0001; telephone (202) 231–1193.

SUPPLEMENTARY INFORMATION: The Defense Intelligence Agency systems of records notices subject to the Privacy Act of 1974 (5 U.S.C. 552a), as amended, have been published in the **Federal Register** and are available from the address in **FOR FURTHER INFORMATION CONTACT** or at the Defense Privacy and Civil Liberties Office Web site at *http://dpclo.defense.gov/.*

The proposed deletion is not within the purview of subsection (r) of the Privacy Act of 1974 (5 U.S.C. 552a), as amended, which requires the submission of a new or altered system report.

Dated: July 8, 2014.

Aaron Siegel,

Alternate OSD Federal Register Liaison Officer, Department of Defense.

Deletion:
LDIA 0014

SYSTEM NAME:

Employee Grievance Files (May 31, 2006, 71 FR 30885)

REASON:

The records contained in this system of records have been migrated into the Conflict Management Programs system LDIA 13–0001 (November 20, 2013, 78 FR 69651). Therefore, LDIA 0014, Employee Grievance Files can be deleted.

[FR Doc. 2014–16242 Filed 7–10–14; 8:45 am]

BILLING CODE 5001–06–P

DEPARTMENT OF DEFENSE

Office of the Secretary

[Docket ID DoD–2014–OS–0102]

Privacy Act of 1974; System of Records

AGENCY: Office of the Secretary of Defense, DoD.

ACTION: Notice to alter a System of Records.

SUMMARY: The Defense Finance and Accounting Service proposes to alter a system of records in its inventory of record systems subject to the Privacy Act of 1974 as amended. This system is used to provide a bridge or link between the Defense Civilian Payroll System (DCPS) and the Civilian Pay Accounting Interface System (CPAIS). This system will create pay information files from DCPS. The pay information files will contain civilian payroll costs and manpower data; this data will then be provided to the U.S. Air Force accounting activities for processing. The system contains information on other than U.S. Air Force civilian employees; however, the CPAIS system will not use the non-Air Force data other than to transmit it directly to the General Accounting and Finance System (GAFS).

DATES: Comments will be accepted on or before August 11, 2014. This proposed action will be effective the day following the end of the comment period unless comments are received which result in a contrary determination.

ADDRESSES: You may submit comments, identified by docket number and title, by any of the following methods:

* *Federal Rulemaking Portal: http://www.regulations.gov.* Follow the instructions for submitting comments.

* *Mail:* Federal Docket Management System Office, 4800 Mark Center Drive, East Tower, 2nd Floor, Suite 02G09, Alexandria, VA 22350–3100.

Instructions: All submissions received must include the agency name and docket number for this **Federal Register** document. The general policy for comments and other submissions from members of the public is to make these submissions available for public viewing on the Internet at *http://www.regulations.gov* as they are received without change, including any personal identifiers or contact information.

FOR FURTHER INFORMATION CONTACT: Mr. Gregory L. Outlaw, Defense Finance and Accounting Service, Freedom of Information/Privacy Act Program Manager, Corporate Communications, DFAS–HKC/IN, 8899 E. 56th Street, Indianapolis, IN 46249–0150 or at (317) 212–4591.

SUPPLEMENTARY INFORMATION: The Defense Finance and Accounting Service notices for systems of records subject to the Privacy Act of 1974 (5 U.S.C. 552a), as amended, have been published in the **Federal Register** and are available from the address in **FOR FURTHER INFORMATION CONTACT** or from the Defense Privacy and Civil Liberties Office Web site at http://dpclo.defense.gov/.

The proposed system report, as required by 5 U.S.C. 552a(r) of the Privacy Act of 1974, as amended, was submitted on June 24, 2014, to the House Committee on Oversight and Government Reform, the Senate Committee on Governmental Affairs, and the Office of Management and Budget (OMB) pursuant to paragraph 4c of Appendix I to OMB Circular No. A–130, ''Federal Agency Responsibilities for Maintaining Records About Individuals,'' dated February 8, 1996 (February 20, 1996, 61 FR 6427).

Dated: July 7, 2014.

Aaron Siegel,

Alternate OSD Federal Register Liaison Officer, Department of Defense.

T7335c

SYSTEM NAME:

Civilian Pay Accounting Bridge Records (May 6, 2009, 74 FR 20932)

CHANGES:

* * * * *

SYSTEM LOCATION:

Delete entry and replace with ''Defense Information Systems Agency, Defense Enterprise Computing Center, 5450 Carlisle Pike, Mechanicsburg, PA 17055–0975.''

CATEGORIES OF INDIVIDUALS COVERED BY THE SYSTEM:

Delete entry and replace with ''Active and reserve United States (U.S.) Air Force, Army, Navy, Marine Corps, and National Guard Members, Defense Security Service and National Geospatial-Intelligence Agency civilian employees, Department of Defense (DoD) civilian employees and other Federal civilian employees paid by appropriated funds and whose pay is processed by the Defense Finance and Accounting Service.''

* * * * *

AUTHORITY FOR MAINTENANCE OF THE SYSTEM:

Delete entry and replace with ''5 U.S.C. 301, Departmental Regulations; DoD Directive 5118.5, Defense Finance and Accounting Service; Department of Defense Financial Management Regulation (DoDFMR) 7000.14–R, Vol. 4, Accounting Policies and Procedures; 31 U.S.C. 3512, Executive agency accounting and other financial management reports and plans; 3513, Financial reporting and accounting system; and

E.O. 9397 (SSN), as amended.''

* * * * *

STORAGE:

Delete entry and replace with: ''Electronic storage media and paper records.''

* * * * *

SAFEGUARDS:

Delete entry and replace with ''Records are maintained in a controlled facility. Physical entry is restricted by the use of locks, guards, and is accessible only to authorized personnel. Access to records is limited to person(s) responsible for servicing the record in performance of their official duties and who are properly screened and cleared for need-to-know. Access to computerized data is limited to CAC enabled users and restricted by passwords, which are changed according to agency security policy.''

* * * * *

SYSTEM MANAGER(S) AND ADDRESS:

Delete entry and replace with ''Defense Finance and Accounting Service-Columbus, I&T, System Manager, Cash, General Funds and Miscellaneous Division, 3990 E Broad Street, Columbus, OH 43213–1152.''

NOTIFICATION PROCEDURE:

Delete entry and replace with ''Individuals seeking to determine whether information about themselves is contained in this record system should address written inquiries to the Defense Finance and Accounting Service, Freedom of Information/Privacy Act Program Manager, Corporate Communications, DFAS–ZCF/IN, 8899 E. 56th Street, Indianapolis, IN 46249–0150.

Requests should contain individual's full name, SSN for verification, current address, and provide a reasonable description of what they are seeking.''

RECORD ACCESS PROCEDURES:

Delete entry and replace with ''Individuals seeking access to information about themselves contained in this record system should address written inquiries to Defense Finance and Accounting Service, Freedom of Information/Privacy Act Program Manager, Corporate Communications, DFAS–ZCF/IN, 8899 E. 56th Street, Indianapolis, IN 46249–0150.

Request should contain individual's full name, SSN for verification, current address, and telephone number.''

CONTESTING RECORD PROCEDURES:

Delete entry and replace with ''The Defense Finance and Accounting Service (DFAS) rules for accessing records, for contesting contents and appealing initial agency determinations are published in Defense Finance and Accounting Service Regulation 5400.11–R, 32 CFR 324; or may be obtained from the Defense Finance and Accounting Service, Freedom of Information/Privacy Act Program Manager, Corporate Communications, office symbol DFAS–ZCF/IN, 8899 E. 56th Street, Indianapolis, IN 46249–0150.''

* * * * *

[FR Doc. 2014–16174 Filed 7–10–14; 8:45 am]

BILLING CODE 5001–06–P

DEPARTMENT OF DEFENSE

Office of the Secretary

[Docket ID DoD–2014–OS–0104]

Privacy Act of 1974; System of Records

AGENCY: Office of the Secretary of Defense, DoD.

ACTION: Notice to alter a System of Records.

SUMMARY: The Office of the Secretary of Defense proposes to alter a system of records, WUSU 07, entitled ''USUHS Grievance Records'', in its inventory of record systems subject to the Privacy Act of 1974, as amended. This system will be used to track, analyze and mitigate informal grievances filed by Uniformed Services University employees covered by a collective bargaining agreement. Utilizing this information allows Uniformed Services University civilian personnel employer relations officers to track grievances, to analyze findings from an investigation, and to research the success and/or failure of mitigation efforts. The information is collected and used by Civilian Personnel Employee Relations Officers.

DATES: Comments will be accepted on or before August 11, 2014. This proposed action will be effective the date following the end of the comment period unless comments are received which result in a contrary determination.

ADDRESSES: You may submit comments, identified by docket number and title, by any of the following methods:

* *Federal Rulemaking Portal: http://www.regulations.gov.* Follow the instructions for submitting comments.

* *Mail:* Federal Docket Management System Office, 4800 Mark Center Drive, East Tower, 2nd Floor, Suite 02G09, Alexandria, VA 22350–3100.

Instructions: All submissions received must include the agency name and docket number for this **Federal Register** document. The general policy for comments and other submissions from members of the public is to make these submissions available for public viewing on the Internet at *http://www.regulations.gov* as they are received without change, including any personal identifiers or contact information.

FOR FURTHER INFORMATION CONTACT: Ms. Cindy Allard, Chief, OSD/JS Privacy Office, Freedom of Information Directorate, Washington Headquarters Service, 1155 Defense Pentagon, Washington, DC 20301–1155, or by phone at (571) 372–0461.

SUPPLEMENTARY INFORMATION: The Office of the Secretary of Defense notices for systems of records subject to the Privacy Act of 1974 (5 U.S.C. 552a), as amended, have been published in the **Federal Register** and are available from the address in **FOR FURTHER INFORMATION CONTACT** or at the Defense Privacy and Civil Liberties Office Web site at *http://dpclo.defense.gov/.*

The proposed system report, as required by U.S.C. 552a(r) of the Privacy Act of 1974, as amended, was submitted on June 27, 2014, to the House Committee on Oversight and

Government Reform, the Senate Committee on Governmental Affairs, and the Office of Management and Budget (OMB) pursuant to paragraph 4c of Appendix I to OMB Circular No. A–130, ''Federal Agency Responsibilities for Maintaining Records About Individuals,'' dated February 8, 1996 (February 20, 1996, 61 FR 6427).

Dated: July 7, 2014.

Aaron Siegel,

Alternate OSD Federal Register Liaison Officer, Department of Defense.

WUSU 07

SYSTEM NAME: USUHS GRIEVANCE RECORDS (JUNE 8, 2010, 75 FR 32416).

CHANGES:

* * * * *

CATEGORIES OF INDIVIDUALS COVERED BY THE SYSTEM:

Delete entry and replace with ''Employees of the Uniformed Services University of the Health Sciences that have submitted grievances.''

CATEGORIES OF RECORDS IN THE SYSTEM:

Delete entry and replace with ''Name, title, series, grade, department and name of representative, if any. Also, all documents related to the alleged grievance, including statements of witnesses, reports of interviews and hearings, examiners findings and recommendations, a copy of the original and final decisions, and related correspondence and exhibits.''

AUTHORITY FOR MAINTENANCE OF THE SYSTEM:

Delete entry and replace with ''5 U.S.C. 7121, Grievance Procedures; and DoD Instruction 1400.25–V771, DoD Civilian Personnel Management System (Administrative Grievance System).''

PURPOSE(S):

Delete entry and replace with ''To track, analyze and mitigate informal grievances filed by Uniformed Services University employees covered by a collective bargaining agreement. Utilizing this information allows Uniformed Services University civilian personnel employer relations officers to track grievances, to analyze findings from an investigation, and to research the success and/or failure of mitigation efforts. The information is collected and used by Civilian Personnel Employee Relations Officers.''

ROUTINE USES OF RECORDS MAINTAINED IN THE SYSTEM, INCLUDING CATEGORIES OF USERS AND THE PURPOSES OF SUCH USES:

Delete entry and replace with ''In addition to those disclosures generally permitted under 5 U.S.C. 552a(b) of the Privacy Act of 1974, as amended, the records contained herein may specifically be disclosed outside the DoD as a routine use pursuant to 5 U.S.C. 552a(b)(3).

The DoD Blanket Routine Uses set forth at the beginning of the Office of the Secretary of Defense (OSD) compilation of the systems of record notices may apply to this system.''

* * * * *

RETRIEVABILITY:

Delete entry and replace with ''Individual's first and last name.''

* * * * *

RETENTION AND DISPOSAL:

Delete entry and replace with ''Grievance records/files are disposed of four years after the case is closed.''

SYSTEM MANAGER(S) AND ADDRESS:

Delete entry and replace with ''Chief, Workforce Relation Division, Uniformed Services University of the Health Sciences, 4301 Jones Bridge Road, Bethesda, MD 20814–4712.''

NOTIFICATION PROCEDURE:

Delete entry and replace with ''Individuals seeking to determine whether information about themselves is contained in this system should address written inquiries to the Chief, Workforce Relations Division, Civilian Human Resources Directorate, Uniformed Services University of the Health Sciences, 4301 Jones Bridge Road, Bethesda, MD 20814–4712.

Signed, written requests should contain the full name, address and the signature of the subject individual.''

RECORD ACCESS PROCEDURES:

Delete entry and replace with ''Individuals seeking access to information about themselves contained in this system should address written inquiries to the Office of the Secretary of Defense/Joint Staff, Freedom of Information Act Requester Service Center, Office of Freedom of Information, 1155 Defense Pentagon, Washington, DC 20301–1155.

Signed, written requests should contain the full name, address and the signature of the subject individual.''

* * * * *

RECORD SOURCE CATEGORIES:

Delete entry and replace with ''Individual on whom the record is maintained; testimony of witnesses; agency officials; and related correspondence from organizations or persons.''

* * * * *

[FR Doc. 2014–16186 Filed 7–10–14; 8:45 am]

BILLING CODE 5001–06–P

DEPARTMENT OF DEFENSE

Department of the Air Force

[Docket ID USAF–2014–0024]

Privacy Act of 1974; System of Records

AGENCY: Department of the Air Force, DoD.

ACTION: Notice to alter a System of Records.

SUMMARY: The Department of the Air Force proposes to alter a system of records notice, F065 AF SVA C, entitled ''Services Activities Participation/Membership/Training Records'' in its existing inventory of records systems subject to the Privacy Act of 1974, as amended. System is utilized by the Air Force Services activities to determine membership and participation eligibility; maintain patron attendance; conduct contests; monitor training and currency of members; tee time and equipment rental reservations; and to track purchase transactions.

DATES: Comments will be accepted on or before August 11, 2014. This proposed action will be effective the day following the end of the comment period unless comments are received which result in a contrary determination.

ADDRESSES: You may submit comments, identified by docket number and title, by any of the following methods:

* *Federal Rulemaking Portal: http://www.regulations.gov.*

Follow the instructions for submitting comments.

* *Mail:* Federal Docket Management System Office, 4800 Mark Center Drive East Tower, 2nd Floor, Suite 02G09, Alexandria, VA 22350–3100.

Instructions: All submissions received must include the agency name and docket number for this **Federal Register** document. The general policy for comments and other submissions from members of the public is to make these submissions available for public viewing on the Internet at *http://www.regulations.gov* as they are received without change, including any personal identifiers or contact information.

FOR FURTHER INFORMATION CONTACT: Mr. Charles J. Shedrick, Department of the Air Force Privacy Office, Air Force Privacy Act Office, Office of Warfighting Integration and Chief Information officer, ATTN: SAF/CIO A6, 1800 Air Force Pentagon, Washington, DC 20330–1800, or by phone at (571) 256–2515.

SUPPLEMENTARY INFORMATION: The Department of the Air Force's notices

for systems of records subject to the Privacy Act of 1974 (5 U.S.C. 552a), as amended, have been published in the **Federal Register** and are available from the address in **FOR FURTHER INFORMATION CONTACT** or from the Defense Privacy and Civil Liberties Office at *http://dpclo.defense.gov/.*

The proposed systems reports, as required by 5 U.S.C. 552a(r) of the Privacy Act, as amended, were submitted on June 18, 2014, to the House Committee on Oversight and Government Reform, the Senate Committee on Homeland Security and Governmental Affairs, and the Office of Management and Budget (OMB) pursuant to paragraph 4c of Appendix I to OMB Circular No. A–130, ''Federal Agency Responsibilities for Maintaining Records About Individuals,'' dated February 8, 1996, (February 20, 1996, 61 FR 6427).

Dated: July 8, 2014.

Aaron Siegel,

Alternate OSD Federal Register Liaison Officer, Department of Defense.

F065 AF SVA C

SYSTEM NAME:

Services Activities Participation/Membership/Training Records (May 9, 2003, 68 FR 24944).

* * * * *

CHANGES:

SYSTEM IDENTIFIER:

Delete entry and replace with ''F034 AFPC B.''

SYSTEM NAME:

Delete entry and replace with ''Air Force Morale and Welfare Membership Programs.''

SYSTEM LOCATION:

Delete entry and replace with ''Air Force Personnel Center Services Directorate, 2261 Hughes Avenue, Suite 156, Joint Base San Antonio (JBSA) Lackland AFB, TX 78236–9854; Major Commands, Air Force installation, Official mailing addresses are published as an appendix to the Air Force's compilation of record system notices.

Federal Cloud, Terremark Network Access Point (NAP) of Americas, 50 NE 9th St #133, Miami, FL 33132.

Air Force Sikes Act Permit Management Program, 2261 Hughes Avenue, Suite 155, Joint Base San Antonio (JBSA) Lackland AFB, TX 78236–9853.''

CATEGORIES OF INDIVIDUALS COVERED BY THE SYSTEM:

Delete entry and replace with ''Personnel who participate in Air Force Moral, Welfare, and Recreation events/activities.''

CATEGORIES OF RECORDS IN THE SYSTEM:

Delete entry and replace with ''Name, address, phone number(s), email address. Individuals participating in outdoor game life activities emergency contact information—name and phone number.''

AUTHORITY FOR MAINTENANCE OF THE SYSTEM:

Delete entry and replace with ''10 U.S.C. 8013, Secretary of the Air Force; 16 U.S.C. 670a—Cooperative plan for conservation and rehabilitation (Sikes Act); Air Force Instruction 32–7064, Integrated Natural Resources Management; Air Force Instructions 34–116, Air Force Golf Course Program; Air Force Instructions 34–118, Air Force Bowling Program.''

PURPOSE(S):

Delete entry and replace with ''System is utilized by the Air Force Services activities to determine membership and participation eligibility; maintain patron attendance; conduct contests; monitor training and currency of members; tee time and equipment rental reservations; and to track purchase transactions.''

* * * * *

STORAGE:

Delete entry and replace with ''Paper and electronic storage media.''

RETRIEVABILITY:

Delete entry and replace with ''Name, email address, and phone number.''

SAFEGUARDS:

Delete entry and replace with ''Records are accessed by the program manager and person(s) responsible for servicing the records system in performance of their official duties and by authorized personnel who are properly screened and cleared for need-to-know. Paper records are stored in file cabinets in buildings that are either locked or have controlled access entry requirements. Electronic records are only accessed by authorized personnel with Common Access Card (CAC), usernames, passwords, pin numbers, and need-to-know.''

RETENTION AND DISPOSAL:

Delete entry and replace with ''Publicity/Theater schedules of activities are destroyed 30 days after event or when superseded, obsolete, or cancelled.

Transaction Machine Cards and Listings are destroyed 45 days after completing necessary reconciliations with pertinent records.

Membership Data used to determine privileges for golf course use, both electronic files and paper forms must be destroyed after 1 year after membership termination.

Golf Course Fee Registers must be destroyed after 2 years or expiration date of membership or when no longer needed, whichever is sooner.

Financial Statements and Reports, and Daily Reports are destroyed after 4 years, provided account is clear.

Outdoor game life records will be destroyed after 3 calendar years by deleting/wiping clean the database.''

SYSTEM MANAGER(S) AND ADDRESS:

Delete entry and replace with ''Chief of Community Programs, Community Programs Division, Services Directorate, Headquarters Air Force Personnel Center, 2261 Hughes Avenue Suite 156, Joint Base San Antonio (JBSA) Lackland AFB, TX 78236–9854.

For outdoor game life, Chief of Air Force Sikes Act Permit Management Program, 2261 Hughes Avenue, Suite 155, Joint Base San Antonio (JBSA) Lackland AFB, TX 78236–9853.''

NOTIFICATION PROCEDURE:

Delete entry and replace with ''Individuals seeking to determine whether this system of records contains information on them should address inquiries to or visit the Community Programs Division, Services Directorate, Air Force Personnel Center, 2261 Hughes Avenue, Suite 156, Joint Base San Antonio (JBSA) Lackland AFB, TX 78236–9854.

Services activities held at the appropriate Air Force installation. Official mailing addresses are published as an appendix to the Air Force's compilation of systems of records notices.

Outdoor game life, Chief Of Air Force Sikes Act Permit Management Program, 2261 Hughes Avenue Suite 155 Joint Base San Antonio (JBSA) Lackland AFB, TX 78236–9853.

For verification purposes, individual should provide their full name and/or account number, and any details which may assist in locating records, and their signature.

In addition, the requester must provide a notarized statement or an unsworn declaration made in accordance with 28 U.S.C. 1746, in the following format:

IF EXECUTED OUTSIDE THE UNITED STATES:

'I declare (or certify, verify, or state) under penalty of perjury under the laws of the United States of America that the foregoing is true and correct. Executed on (date). (Signature)'.

If executed within the United States, its territories, possessions, or commonwealths: 'I declare (or certify, verify, or state) under penalty of perjury that the foregoing is true and correct. Executed on (date). (Signature)'.''

RECORD ACCESS PROCEDURES:

Delete entry and replace with ''Individuals seeking access to records about themselves contained in this system should address written inquiries to or visit the Community Programs Division, Services Directorate, Air Force Personnel Center, 2261 Hughes Avenue, Suite 156, Joint Base San Antonio (JBSA) Lackland AFB, TX 78236–9854.

Services activities held at the appropriate Air Force installation. Official mailing addresses are published as an appendix to the Air Force's compilation of systems of records notices.

Outdoor game life, Chief of Air Force Sikes Act Permit Management Program, 2261 Hughes Avenue, Suite 155, Joint Base San Antonio (JBSA) Lackland AFB, TX 78236–9853.

For verification purposes, individual should provide their full name and/or account number, and any details which may assist in locating records, and their signature.

In addition, the requester must provide a notarized statement or an unsworn declaration made in accordance with 28 U.S.C. 1746, in the following format:

IF EXECUTED OUTSIDE THE UNITED STATES:

'I declare (or certify, verify, or state) under penalty of perjury under the laws of the United States of America that the foregoing is true and correct. Executed on (date). (Signature)'.

If executed within the United States, its territories, possessions, or commonwealths: 'I declare (or certify, verify, or state) under penalty of perjury that the foregoing is true and correct. Executed on (date). (Signature)'.''

CONTESTING RECORD PROCEDURES:

Delete entry and replace with ''The Air Force rules for accessing records and for contesting contents and appealing initial agency determinations are published in 32 CFR part 806b, Air Force Instruction 33–332, Air Force Privacy Program and may be obtained from the system manager.''

* * * * *

[FR Doc. 2014–16224 Filed 7–10–14; 8:45 am]

BILLING CODE 5001–06–P

DEPARTMENT OF DEFENSE

Department of the Army

[Docket ID USA–2014–0024]

Privacy Act of 1974; System of Records

AGENCY: Department of the Army, DoD.

ACTION: Notice to alter a System of Records.

SUMMARY: The Department of the Army proposes to alter a system of records notice, A0027–20a DAJA, entitled ''U.S. Army Claims Service Management Information System'' in its existing inventory of records systems subject to the Privacy Act of 1974, as amended. This system is used to develop and preserve all relevant evidence about incidents, which generate claims against or in favor of the Army. Evidence developed is used as a legal basis to support the settlement of claims. Data are also used as a management tool to supervise claims operations at subordinate commands worldwide.

DATES: Comments will be accepted on or before August 11, 2014. This proposed action will be effective the day following the end of the comment period unless comments are received which result in a contrary determination.

ADDRESSES: You may submit comments, identified by docket number and title, by any of the following methods:

* *Federal Rulemaking Portal: http://www.regulations.gov.* Follow the instructions for submitting comments.

* *Mail:* Federal Docket Management System Office, 4800 Mark Center Drive East Tower, 2nd Floor, Suite 02G09, Alexandria, VA 22350–3100.

Instructions: All submissions received must include the agency name and docket number for this **Federal Register** document. The general policy for comments and other submissions from members of the public is to make these submissions available for public viewing on the Internet at *http://www.regulations.gov* as they are received without change, including any personal identifiers or contact information.

FOR FURTHER INFORMATION CONTACT: Mr. Leroy Jones, Department of the Army, Privacy Office, U.S. Army Records Management and Declassification Agency, 7701 Telegraph Road, Casey Building, Suite 144, Alexandria, VA 22325–3905 or by calling (703) 428–6185.

SUPPLEMENTARY INFORMATION: The Department of the Army's notices for systems of records subject to the Privacy Act of 1974 (5 U.S.C. 552a), as amended, have been published in the **Federal Register** and are available from the address in **FOR FURTHER INFORMATION CONTACT** or from the Defense Privacy and Civil Liberties Office Web site at *http://dpclo.defense.gov/.*

The proposed systems reports, as required by 5 U.S.C. 552a(r) of the Privacy Act, as amended were submitted on June 10, 2014, to the House Committee on Oversight and Government Reform, the Senate Committee on Homeland Security and Governmental Affairs, and the Office of Management and Budget (OMB) pursuant to paragraph 4c of Appendix I to OMB Circular No. A–130, ''Federal Agency Responsibilities for Maintaining Records About Individuals,'' dated February 8, 1996 (February 20, 1996, 61 FR 6427).

Dated: July 8, 2014.

Aaron Siegel,

Alternate OSD Federal Register Liaison Officer, Department of Defense.

A0027–20a DAJA

SYSTEM NAME:

U.S. Army Claims Service Management Information System (August 1, 2008, 73 FR 44974)

CHANGES:

* * * * *

CATEGORIES OF RECORDS IN THE SYSTEM:

Delete entry and replace with ''Name of claimant, Social Security Number (SSN), address and telephone number, case/claim file number, type of claim presented, reports of investigation, witness statements, police reports, photographs, diagrams, bills, estimates, expert opinions, medical records and similar reports, copy of correspondence with claimant, potential claimants, third parties, and insurers of claimants or third parties, copies of finance vouchers evidencing payment of claims, and similar relevant information.''

* * * * *

ROUTINE USES OF RECORDS MAINTAINED IN THE SYSTEM, INCLUDING CATEGORIES OF USERS AND THE PURPOSES OF SUCH USES:

Delete entry and replace with ''In addition to those disclosures generally permitted under 5 U.S.C. 552a(b) of the Privacy Act of 1974, as amended, these records contained therein may specifically be disclosed outside the DoD as a routine use pursuant to 5 U.S.C. 552a(b)(3) as follows:

To the Internal Revenue Service for tax purposes.

To the Department of Justice for assistance in deciding disposition of

claims filed against or in favor of the government and for considering criminal prosecution, civil court action or regulatory orders.

To the U.S. Claims Court and the Court of Appeals for the Federal Circuit, to support legal actions, considerations or evidence to support proposed legislative or regulatory changes, for budgetary purposes, for quality control or assurance type studies, or to support action against a third party.

To foreign governments for use in settlements of claims under the North Atlantic Treaty Organization Status of Forces Agreement or similar international agreements.

To the state governments for use in defending or prosecuting claim by the state or its representatives.

To the Department of Labor, for consideration in determining rights under Federal Employees Compensation Act or similar legislation.

To civilian and government experts for assistance in evaluating the claim.

To the Office of Management and Budget for preparation of private relief bills for presentation to the Congress.

To government contractors for use in defending or settling claims filed against them, including recovery actions, arising out of the performance of a Government contract.

To federal and state workmen's compensation agencies for use in adjudicating claims.

To private insurers with a legal interest in the same case.

To potential joint tort-feasors or their representatives for the purpose of prosecuting or defending claims for contribution or indemnity.

Information from this system of records may also be disclosed to law students participating in a volunteer legal support program approved by the Judge Advocate General of the Army.

The DoD Blanket Routine Uses set forth at the beginning of the Army's compilation of systems of records notices may apply to this system.

Note: This system of records contains protected health information. The DoD Health Information Privacy Regulation (DoD 6025.18–R) issued pursuant to the Health Insurance Portability and Accountability Act of 1996, applies to most such health information. DoD 6025.18–R may place additional procedural requirements on the uses and disclosures of such information beyond those found in the Privacy Act of 1974, as amended, or mentioned in this system of records notice.''

* * * * *

SYSTEM MANAGER(S) AND ADDRESS:

Delete entry and replace with ''The Judge Advocate General, Headquarters, Department of the Army, 2200 Army Pentagon, Room 2B517, Washington, DC 20310–2200.''

NOTIFICATION PROCEDURE:

Delete entry and replace with ''Individuals seeking to determine whether information about themselves is contained in this system should address written inquiries to the Commander, U.S. Army Claims Service, 4411 Llewellyn Avenue, Fort Meade, MD 20755–5360.

Individual should provide his/her full name, current address and telephone number, case number appearing on correspondence, and any other personal identifying data that will assist in locating the record.

In addition, the requester must provide a notarized statement or an unsworn declaration made in accordance with 28 U.S.C. 1746, in the following format:

If executed outside the United States: 'I declare (or certify, verify, or state) under penalty of perjury under the laws of the United States of America that the foregoing is true and correct. Executed on (date). (Signature).'

If executed within the United States, its territories, possessions, or commonwealths: 'I declare (or certify, verify, or state) under penalty of perjury that the foregoing is true and correct. Executed on (date). (Signature).'''

RECORD ACCESS PROCEDURES:

Delete entry and replace with ''Individuals seeking access to information about themselves contained in this system should address written inquiries to the Commander, U.S. Army Claims Service, 4411 Llewellyn Avenue, Fort Meade, MD 20755–5360.

Individual should provide his/her full name, current address and telephone number, case number appearing on correspondence, and any other personal identifying data that will assist in locating the record.

In addition, the requester must provide a notarized statement or an unsworn declaration made in accordance with 28 U.S.C. 1746, in the following format:

If executed outside the United States: 'I declare (or certify, verify, or state) under penalty of perjury under the laws of the United States of America that the foregoing is true and correct. Executed on (date). (Signature).

If executed within the United States, its territories, possessions, or commonwealths: 'I declare (or certify, verify, or state) under penalty of perjury that the foregoing is true and correct. Executed on (date). (Signature).'''

* * * * *

[FR Doc. 2014–16203 Filed 7–10–14; 8:45 am]

BILLING CODE 5001–06–P

DEPARTMENT OF DEFENSE

Department of the Army

[Docket ID USA–2014–0026]

Privacy Act of 1974; System of Records

AGENCY: Department of the Army, DoD.

ACTION: Notice to amend two systems of records.

SUMMARY: The Department of the Army proposes to amend two systems of records ''A0340–21 OAA, Privacy Case Files'' and ''A0025–55 OAA, Freedom of Information Act Program Files'' in its inventory of record systems subject to the Privacy Act of 1974, as amended. The A0340–21 OAA is used to process and coordinate requests for access and amendment of an individuals' record; to process appeals on denials of requests for access or amendment to individuals' records by the data subject against agency rulings; and to ensure timely response to requesters. The A0025–55 OAA is used to control administrative processing of requests for information either pursuant to the Freedom of Information Act Program or to E.O. 12958, National Classified Security Information, as amended, including appeals from denials.

DATES: Comments will be accepted on or before August 11, 2014. This proposed action will be effective on the day following the end of the comment period unless comments are received which result in a contrary determination.

ADDRESSES: You may submit comments, identified by docket number and title, by any of the following methods:

* Federal Rulemaking Portal: *http://www.regulations.gov.* Follow the instructions for submitting comments.

* Mail: Federal Docket Management System Office, 4800 Mark Center Drive, East Tower, 2nd Floor, Suite 02G09, Alexandria, VA 22350–3100.

Instructions: All submissions received must include the agency name and docket number for this **Federal Register** document. The general policy for comments and other submissions from members of the public is to make these submissions available for public viewing on the Internet at *http://www.regulations.gov* as they are received without change, including any

personal identifiers or contact information.

FOR FURTHER INFORMATION CONTACT: Mr. Leroy Jones, Jr., Department of the Army, Privacy Office, U.S. Army Records Management and Declassification Agency, 7701 Telegraph Road, Casey Building, Suite 144, Alexandria, VA 22315–3827 or by phone at 703–428–6185.

SUPPLEMENTARY INFORMATION: The Department of the Army systems of records notices subject to the Privacy Act of 1974 (5 U.S.C. 552a), as amended, have been published in the **Federal Register** and are available from the address in **FOR FURTHER INFORMATION CONTACT** or at the Defense Privacy and Civil Liberties Office Web site at *http://dpclo.defense.gov/.*

The proposed changes to the record systems being amended are set forth in this notice. The proposed amendments are not within the purview of subsection (r) of the Privacy Act of 1974 (5 U.S.C. 552a), as amended, which requires the submission of a new or altered system report.

Dated: July 8, 2014.

Aaron Siegel,

Alternate OSD Federal Register Liaison Officer, Department of Defense.

A0340–21 OAA

SYSTEM NAME:

Privacy Case Files (December 8, 2005, 70 FR 72997)

CHANGES:

* * * * *

SYSTEM LOCATION:

Delete entry and replace with ''These records exist at Headquarters, Department of the Army, staff and field operating agencies, major commands, installations and activities receiving Privacy Act requests.

Director, U.S. Army Records Management and Declassification Agency, ATTN: Freedom of Information/Privacy Division, 7701 Telegraph Road, Casey Building, Suite 144, Alexandria, VA 22315–3905.

Records also exist in offices of Access and Amendment Refusal Authorities when an individual's request to access and/or amend his/her record is denied. Upon appeal of that denial, record is maintained by the Department of the Army Privacy Review Board.''

* * * * *

PURPOSE(S):

Delete entry and replace with ''To process and coordinate requests for access and amendment of an individuals' record; to process appeals on denials of requests for access or amendment to individuals' records by the data subject against agency rulings; and to ensure timely response to requesters.''

ROUTINE USES OF RECORDS MAINTAINED IN THE SYSTEM, INCLUDING CATEGORIES OF USERS AND THE PURPOSES OF SUCH USES:

Delete entry and replace with ''In addition to those disclosures generally permitted under 5 U.S.C. 552a(b) of the Privacy Act of 1974, as amended, these records contained therein may specifically be disclosed outside the DoD as a routine use pursuant to 5 U.S.C. 552a(b)(3) as follows:

The DoD Blanket Uses set forth at the beginning of the Army's compilation of systems of records notices may apply to this system.''

* * * * *

RETRIEVABILITY:

Delete entry and replace with ''By individual's name.''

SAFEGUARDS:

Delete entry and replace with ''Records are accessed by custodian of the record system and by persons responsible for servicing the record system in performance of their official duties. Records are stored in locked cabinets or rooms.

DoD components and approved users ensure that electronic records collected and used are maintained in controlled areas accessible only to authorized personnel. Physical security differs from site to site, but the automated records must be maintained in controlled areas accessible only by authorized personnel. Access to computerized data is restricted by use of common access card (CAC) and is accessible only by users with an authorized account. The system and electronic backups are maintained in controlled facilities that employ physical restrictions and safeguards such as security guards, identification badges, key cards, and locks.''

* * * * *

NOTIFICATION PROCEDURE:

Delete entry and replace with ''Individuals seeking to determine whether information about themselves is contained in this system should address written inquiries to the U.S. Army Records Management and Declassification Agency, Freedom of Information/Privacy Division, 7701 Telegraph Road, Casey Building, Suite 144, Alexandria, VA 22315–3905.

For verification purposes, individual should provide full name, date and place of birth, current address and other personal information necessary to locate the record.

In addition, the requester must provide a notarized statement or an unsworn declaration made in accordance with 28 U.S.C. 1746, in the following format:

If executed outside the United States: 'I declare (or certify, verify, or state) under penalty of perjury under the laws of the United States of America that the foregoing is true and correct. Executed on (date). (Signature).'

If executed within the United States, its territories, possessions, or commonwealths: 'I declare (or certify, verify, or state) under penalty of perjury that the foregoing is true and correct. Executed on (date). (Signature).'''

RECORD ACCESS PROCEDURES:

Delete entry and replace with ''Individuals seeking access to information about themselves contained in this system should address written inquiries to the office that processed the initial inquiry, access request, or amendment request.

Individual may obtain assistance from the U.S. Army Records Management and Declassification Agency, Freedom of Information/Privacy Division, 7701 Telegraph Road, Casey Building, Suite 144, Alexandria, VA 22315–3905.

For verification purposes, individual should provide full name, date and place of birth, current address and other personal information necessary to locate the record.

In addition, the requester must provide a notarized statement or an unsworn declaration made in accordance with 28 U.S.C. 1746, in the following format:

If executed outside the United States: 'I declare (or certify, verify, or state) under penalty of perjury under the laws of the United States of America that the foregoing is true and correct. Executed on (date). (Signature).'

If executed within the United States, its territories, possessions, or commonwealths: 'I declare (or certify, verify, or state) under penalty of perjury that the foregoing is true and correct. Executed on (date). (Signature).'''

* * * * *

A0025–55 OAA

SYSTEM NAME:

Freedom of Information Act Program Files (December 8, 2005, 70 FR 72996)

CHANGES:

* * * * *

SYSTEM LOCATION:

Delete entry and replace with ''Headquarters, Department of the Army, staff and field operating agencies, major commands, installations and activities

receiving requests to access records pursuant to the Freedom of Information Act or to declassify documents pursuant to E.O. 12958, National Classified Security Information, as amended. Director, U.S. Army Records Management and Declassification Agency, Freedom of Information/ Privacy Division, 7701 Telegraph Road, Casey Building, Suite 150A, Alexandria, VA 22315–3905.''

* * * * *

AUTHORITY FOR MAINTENANCE OF THE SYSTEM:

Delete entry and replace with ''5 U.S.C. 552, Freedom of Information Act, as amended by Pub.L. 93–502; 5 U.S.C. 301, Departmental Regulations, 10 U.S.C. 3013, Secretary of the Army; Army Regulation 25–55, The Department of the Army Freedom of Information Act Program; and E.O. 13292, Further Amendment to Executive Order 12958, as amended, Classified National Security Information.''

* * * * *

ROUTINE USES OF RECORDS MAINTAINED IN THE SYSTEM, INCLUDING CATEGORIES OF USERS AND THE PURPOSES OF SUCH USES:

Delete entry and replace with ''In addition to those disclosures generally permitted under 5 U.S.C. 552a(b) of the Privacy Act of 1974, as amended, these records contained therein may specifically be disclosed outside the DoD as a routine use pursuant to 5 U.S.C. 552a(b)(3) as follows:

The DoD Blanket Routine Uses set forth at the beginning of the Army's compilation of systems of records notices may apply to this system.''

* * * * *

SAFEGUARDS:

Delete entry and replace with ''All records are maintained in areas accessible only to authorized personnel who have official need in the performance of their assigned duties. Automated records are further protected by assignment of users' identification and password to protect the system from unauthorized access. User identification and passwords are changed at random times. DoD Components and approved users ensure that electronic records collected and used are maintained in controlled areas accessible only to authorized personnel. Physical security differs from site to site, but the automated records must be maintained in controlled areas accessible only by authorized personnel. Access to computerized data is restricted by use of common access cards (CACs) and is accessible only by users with an authorized account. The system and electronic backups are maintained in controlled facilities that employ physical restrictions and safeguards such as security guards, identification badges, key cards, and locks.''

* * * * *

NOTIFICATION PROCEDURE:

Delete entry and replace with ''Individuals seeking to determine if information about themselves is contained in this record system should address written inquiries to the Director, U.S. Army Records Management and Declassification Agency, Freedom of Information/Privacy Division, 7701 Telegraph Road, Casey Building, Suite 150A, Alexandria, VA 22315–3905.

For verification purposes, individual should provide enough information to permit locating the record.

In addition, the requester must provide a notarized statement or an unsworn declaration made in accordance with 28 U.S.C. 1746, in the following format:

If executed outside the United States: 'I declare (or certify, verify, or state) under penalty of perjury under the laws of the United States of America that the foregoing is true and correct. Executed on (date). (Signature).'

If executed within the United States, its territories, possessions, or commonwealths: 'I declare (or certify, verify, or state) under penalty of perjury that the foregoing is true and correct. Executed on (date). (Signature).' ''

RECORD ACCESS PROCEDURES:

Delete entry and replace with ''Individuals seeking access to records about themselves contained in this record system should address written inquiries to the Director, U.S. Army Records Management and Declassification Agency, Freedom of Information/Privacy Division, 7701 Telegraph Road, Casey Building, Suite 150A, Alexandria, VA 22315–3905.

For verification purposes, individual should provide enough information to permit locating the record.

In addition, the requester must provide a notarized statement or an unsworn declaration made in accordance with 28 U.S.C. 1746, in the following format:

If executed outside the United States: 'I declare (or certify, verify, or state) under penalty of perjury under the laws of the United States of America that the foregoing is true and correct. Executed on (date). (Signature).'

If executed within the United States, its territories, possessions, or commonwealths: 'I declare (or certify, verify, or state) under penalty of perjury that the foregoing is true and correct. Executed on (date). (Signature).' ''

* * * * *

[FR Doc. 2014–16258 Filed 7–10–14; 8:45 am]

BILLING CODE 5001–06–P

DEPARTMENT OF DEFENSE

Department of the Army

[Docket ID USA–2014–0025]

Privacy Act of 1974; System of Records

AGENCY: Department of the Army, DoD.

ACTION: Notice to alter a System of Records.

SUMMARY: The Department of the Army proposes to alter a system of records notice, A0190–13 OPMG, entitled ''Security/Access Badges and Automated Installation Entry System (AIE) Records'' in its existing inventory of records systems subject to the Privacy Act of 1974, as amended. This system supports the Department of the Army physical security and access control programs and Information Assurance programs. Records personal data and vehicle information registered with the Department of the Army; provides a record of security/access badges issued; ensures positive identification of personnel authorized access to restricted areas; restricts entry to installations and activities; maintains accountability for issuance and disposition of security/access badges and for producing installation management reports.

DATES: Comments will be accepted on or before August 11, 2014. This proposed action will be effective the day following the end of the comment period unless comments are received which result in a contrary determination.

ADDRESSES: You may submit comments, identified by docket number and title, by any of the following methods:

* *Federal Rulemaking Portal: http://www.regulations.gov.*

Follow the instructions for submitting comments.

* *Mail:* Federal Docket Management System Office, 4800 Mark Center Drive East Tower, 2nd Floor, Suite 02G09, Alexandria, VA 22350–3100.

Instructions: All submissions received must include the agency name and docket number for this **Federal Register** document. The general policy for comments and other submissions from members of the public is to make these submissions available for public viewing on the Internet at *http://*

www.regulations.gov as they are received without change, including any personal identifiers or contact information.

FOR FURTHER INFORMATION CONTACT: Mr. Leroy Jones, Department of the Army, Privacy Office, U.S. Army Records Management and Declassification Agency, 7701 Telegraph Road, Casey Building, Suite 144, Alexandria, VA 22325–3905 or by calling (703) 428–6185.

SUPPLEMENTARY INFORMATION: The Department of the Army's notices for systems of records subject to the Privacy Act of 1974 (5 U.S.C. 552a), as amended, have been published in the **Federal Register** and are available from the address in **FOR FURTHER INFORMATION CONTACT** or from the Defense Privacy and Civil Liberties Office Web site at http://dpclo.defense.gov/;.

The proposed systems reports, as required by 5 U.S.C. 552a(r) of the Privacy Act, as amended were submitted on June 12, 2014, to the House Committee on Oversight and Government Reform, the Senate Committee on Homeland Security and Governmental Affairs, and the Office of Management and Budget (OMB) pursuant to paragraph 4c of Appendix I to OMB Circular No. A–130, ''Federal Agency Responsibilities for Maintaining Records About Individuals,'' dated February 8, 1996 (February 20, 1996, 61 FR 6427).

Dated: July 8, 2014.

Aaron Siegel,

Alternate OSD Federal Register Liaison Officer, Department of Defense.

A0190–13 OPMG

SYSTEM NAME:

Security/Access Badges and Automated Installation Entry System (AIE) Records (October 1, 2008, 73 FR 57074)

CHANGES:

* * * * *

CATEGORIES OF RECORDS IN THE SYSTEM:

Delete entry and replace with ''Individual's application for security/access badge on appropriate Department of Defense and Army forms; individual's special credentials, allied papers, registers, logs reflecting sequential numbering of security/access badges may also contain other relevant documentation. Name, current address, phone number, grade, Social Security Number (SSN), DoD ID Number, status, date and place of birth, weight, height, eye color, hair color, gender, passport number, country of citizenship, geographic and electronic home and work addresses and telephone numbers, marital status, fingerprints, photographs, and identification card issue and expiration dates.

The system also includes vehicle information such as manufacturer, model year, color and vehicle type, vehicle identification number, license plate state and number, decal number, current registration, automobile insurance data, and driver's license data.''

* * * * *

RETRIEVABILITY:

Delete entry and replace with ''By individual's name, SSN, DoD ID Number and/or security/access badge number.''

SAFEGUARDS:

Delete entry and replace with ''Data maintained in secure buildings accessed only by personnel authorized access. Computerized information protected by alarms, encrypted data-at-rest/data-in-transit and established access control procedures.''

* * * * *

SYSTEM MANAGER(S) AND ADDRESS:

Delete entry and replace with ''AIE System Program—Joint Program Manager Guardian (JPMG)/Joint Product Manager, Force Protection Systems (JPdM–FPS), Attn: SFAE–CBD–GN–F, 5900 Putman Road, Suite 1, Fort Belvoir, Virginia 22060–5420.

Security Badges—Commander, U.S. Total Army Personnel Command, 200 Stovall Street, Alexandria, VA 22332–0400.''

NOTIFICATION PROCEDURE:

Delete entry and replace with ''Individuals seeking to determine whether information about themselves is contained in this system should address written inquiries to the issuing office where the individual obtained the identification card or to the system manager.

Individual should provide full name, number of security/access badge, current address, phone number and signature.

In addition, the requester must provide a notarized statement or an unsworn declaration made in accordance with 28 U.S.C. 1746, in the following format:

If executed outside the United States: 'I declare (or certify, verify, or state) under penalty of perjury under the laws of the United States of America that the foregoing is true and correct. Executed on (date). (Signature)'.

If executed within the United States, its territories, possessions, or commonwealths: 'I declare (or certify, verify, or state) under penalty of perjury that the foregoing is true and correct. Executed on (date). (Signature)'.''

RECORD ACCESS PROCEDURES:

Delete entry and replace with ''Individuals seeking access to records about themselves contained in this record system should address written inquiries to the issuing officer at the appropriate installation.

Individual should provide full name, number of security/access badge, current address, phone number and signature.

In addition, the requester must provide a notarized statement or an unsworn declaration made in accordance with 28 U.S.C. 1746, in the following format:

If executed outside the United States: 'I declare (or certify, verify, or state) under penalty of perjury under the laws of the United States of America that the foregoing is true and correct. Executed on (date). (Signature)'.

If executed within the United States, its territories, possessions, or commonwealths: 'I declare (or certify, verify, or state) under penalty of perjury that the foregoing is true and correct. Executed on (date). (Signature)'.''

* * * * *

RECORD SOURCE CATEGORIES:

Delete entry and replace with ''From the individual, Defense Manpower Data Center's (DMDC) Interoperability Layer Services (IoLS) and Defense Enrollment Eligibility Reporting System (DEERS), Army records and reports.''

* * * * *

[FR Doc. 2014–16205 Filed 7–10–14; 8:45 am]

BILLING CODE 5001–06–P

DEPARTMENT OF DEFENSE

Department of the Navy

Notice of Intent to Grant Partially Exclusive Patent License; Xtreme Alternative Defense Systems Ltd.

AGENCY: Department of the Navy, DOD.

ACTION: Notice.

SUMMARY: The Department of the Navy hereby gives notice of its intent to grant to Xtreme Alternative Defense Systems Ltd. a revocable, nonassignable, partially exclusive license to practice in the United States in the fields of Counter Piracy Application for Commercial Shipping and Counter UAV Systems, the Government-owned invention described below: Patent 8,367,991 (Navy Case 99,995, issued

February 5, 2013, entitled ''Modulation Device For A Mobile Tracking Device.''

DATES: Anyone wishing to object to the grant of this license must file written objections along with supporting evidence, if any, not later than July 28, 2014.

ADDRESSES: Written objections are to be filed with Naval Surface Warfare Center, Crane Div, Code OOL, Bldg 2, 300 Highway 361, Crane, IN 47522–5001.

FOR FURTHER INFORMATION CONTACT: Mr. Christopher Monsey, Naval Surface Warfare Center, Crane Div, Code OOL, Bldg 2, 300 Highway 361, Crane, IN 47522–5001, telephone 812–854–4100.

Authority: 35 U.S.C. 207, 37 CFR part 404.

Dated: July 2, 2014.

N. A. Hagerty-Ford,

Commander, Office of the Judge Advocate General, U.S. Navy, Federal Register Liaison Officer.

[FR Doc. 2014–16240 Filed 7–10–14; 8:45 am]

BILLING CODE 3810–FF–P

DEPARTMENT OF DEFENSE

Department of the Navy

Notice of Availability of Government-Owned Inventions; Available for Licensing

AGENCY: Department of the Navy, DOD.

ACTION: Notice.

SUMMARY: The invention listed below is assigned to the United States Government as represented by the Secretary of the Navy and is available for licensing by the Department of the Navy. Patent application 14/006,530: HIGH EFFICIENCY COMBUSTER AND CLOSED-CYCLE HEAT ENGINE INTERFACE. Powering system wherein heat-transfer liquid decouples an engine and combustor.

ADDRESSES: Written objections are to be filed with Naval Surface Warfare Center, Crane Div, Code OOL, Bldg 2, 300 Highway 361, Crane, IN 47522–5001.

FOR FURTHER INFORMATION CONTACT: Mr. Christopher Monsey, Naval Surface Warfare Center, Crane Div, Code OOL, Bldg 2, 300 Highway 361, Crane, IN 47522–5001, telephone 812–854–4100.

Authority: 35 U.S.C. 207, 37 CFR part 404.

Dated: July 2, 2014.

N.A. Hagerty-Ford,

Commander, Office of the Judge Advocate General, U.S. Navy, Federal Register Liaison Officer.

[FR Doc. 2014–16234 Filed 7–10–14; 8:45 am]

BILLING CODE 3810–FF–P

DEPARTMENT OF DEFENSE

Department of the Navy

Notice of Intent to Grant Partially Exclusive Patent License; Xtreme Alternative Defense Systems Ltd.

AGENCY: Department of the Navy, DoD.

ACTION: Notice.

SUMMARY: The Department of the Navy hereby gives notice of its intent to grant to Xtreme Alternative Defense Systems Ltd. a revocable, nonassignable, partially exclusive license to practice in the United States in the fields of Counter Piracy Application for Commercial Shipping and Counter UAV Systems, the Government-owned invention described below: Patent 8,420,977 (Navy Case 99,996), issued April 16, 2013, entitled ''High Power Laser System.''

DATES: Anyone wishing to object to the grant of this license must file written objections along with supporting evidence, if any, not later than July 28, 2014.

ADDRESSES: Written objections are to be filed with Naval Surface Warfare Center, Crane Div, Code OOL, Bldg 2, 300 Highway 361, Crane, IN 47522–5001.

FOR FURTHER INFORMATION CONTACT: Mr. Christopher Monsey, Naval Surface Warfare Center, Crane Div, Code OOL, Bldg 2, 300 Highway 361, Crane, IN 47522–5001, telephone 812–854–4100.

Authority: 35 U.S.C. 207, 37 CFR part 404.

Dated: July 2, 2014.

N.A. Hagerty-Ford,

Commander, Office of the Judge Advocate General, U.S. Navy, Federal Register Liaison Officer.

[FR Doc. 2014–16256 Filed 7–10–14; 8:45 am]

BILLING CODE 3810–FF–P

DEPARTMENT OF EDUCATION

Deadline Dates for Reports and Other Records Associated With the Free Application for Federal Student Aid (FAFSA®), the Federal Pell Grant Program, the William D. Ford Federal Direct Loan Program, the Teacher Education Assistance for College and Higher Education Grant Program, and the Iraq and Afghanistan Service Grant Program for the 2014–2015 Award Year

AGENCY: Federal Student Aid, Department of Education.

ACTION: Notice.

Catalog Federal Domestic Assistance (CFDA) Numbers: 84.007 Federal Supplemental Educational Opportunity Grant Program (FSEOG); 84.033 Federal Work Study Program (FWS); 84.038 Federal Perkins Loan (Perkins Loan) Program; 84.063 Federal Pell Grant Program; 84.268 William D. Ford Federal Direct Loan Program; 84.379 Teacher Education Assistance for College and Higher Education Grant Program; 84.408 Iraq and Afghanistan Service Grant Program.

SUMMARY: The Secretary announces deadline dates for the receipt of documents and other information from applicants and institutions participating in certain Federal student aid programs authorized under title IV of the Higher Education Act of 1965, as amended (HEA), for the 2014–2015 award year. The Federal student aid programs covered by this deadline date notice are the Federal Pell Grant (Pell Grant), William D. Ford Federal Direct Loan (Direct Loan), Teacher Education Assistance for College and Higher Education (TEACH) Grant, and Iraq and Afghanistan Service Grant programs.

These programs, administered by the U.S. Department of Education (Department), provide financial assistance to students attending eligible postsecondary educational institutions to help them pay their educational costs.

Deadline and Submission Dates: See Tables A and B at the end of this notice.

Table A—Deadline Date by Which a Student Must Submit the FAFSA, by Which the Institution Must Receive the Student's Institutional Student Information Record (ISIR) or Student Aid Report (SAR), and by Which the Institution Must Submit Verification Outcomes for Certain Students for the 2014–2015 Award Year

Table A provides information and deadline dates for receipt of the FAFSA, corrections to and signatures for the FAFSA, ISIRs, and SARs, and verification documents.

For all Federal student aid programs, an ISIR or SAR for the student must be received by the institution no later than the student's last date of enrollment for the 2014–2015 award year or September 28, 2015, whichever is earlier. As a reminder, a FAFSA must be submitted for the dependent student for whom a parent is applying for a Direct PLUS Loan.

The deadline date for the receipt of a FAFSA by the Department's Central Processing System is June 30, 2015, regardless of the method that the applicant uses to submit the FAFSA. The deadline date for the receipt of a signature page for the FAFSA (if required), correction, notice of change of

address or school, or request for a duplicate SAR is September 19, 2015.

Verification documents must be received by the institution no later than 120 days after the student's last date of enrollment for the 2014–2015 award year or September 28, 2015, whichever is earlier.

For all Federal student aid programs except for (1) Direct PLUS Loans that will be made to parent borrowers, and (2) Direct Unsubsidized Loans that will be made to dependent students who have been determined by the institution, pursuant to HEA section 479A(a), to be eligible for such a loan without providing parental information on the FAFSA, the ISIR or SAR must have an official expected family contribution (EFC) and must be received by the institution no later than the earlier of the student's last date of enrollment for the 2014–2015 award year or September 28, 2015.

For a student who is requesting aid through the Pell Grant, FSEOG, FWS, and Federal Perkins Loan programs or for a student requesting Direct Subsidized Loans, who does not meet the conditions for a late disbursement under 34 CFR 668.164(g), a valid ISIR or valid SAR must be received no later than the student's last date of enrollment for the 2014–2015 award year or September 28, 2015, whichever is earlier. For a student meeting the conditions for a late disbursement for these programs, a valid ISIR or valid SAR must be received no later than 180 days after the student otherwise became ineligible or September 28, 2015, whichever is earlier.

In accordance with 34 CFR 668.164(g)(4)(i), an institution may not make a late disbursement of title IV student assistance funds later than 180 days after the date of the institution's determination that the student was no longer enrolled. Table A provides that, to make a late disbursement of title IV student assistance funds, an institution must receive a valid ISIR or valid SAR no later than 180 days after its determination that the student was no longer enrolled, but not later than September 28, 2015.

Table B—Federal Pell Grant, Iraq and Afghanistan Service Grant, Direct Loan, and TEACH Grant Programs' Deadline Dates for Disbursement Information by Institutions for the 2014–2015 Award Year or Processing Year

Table B provides the earliest dates for institutions to submit Pell Grant, Iraq and Afghanistan Service Grant, Direct Loan, and TEACH Grant disbursement records to the Department's Common Origination and Disbursement (COD) System and deadline dates for an institution's request for administrative relief if it cannot meet the established deadline for specified reasons.

An institution must submit Pell Grant, Iraq and Afghanistan Service Grant, Direct Loan, and TEACH Grant disbursement records, as applicable, no later than 15 days after making the disbursement or becoming aware of the need to adjust a student's previously reported disbursement. In accordance with 34 CFR 668.164(a), title IV funds are disbursed on the date that the institution: (a) Credits those funds to a student's account in the institution's general ledger or any subledger of the general ledger, or (b) pays those funds to a student directly. Title IV funds are disbursed even if an institution uses its own funds in advance of receiving program funds from the Secretary.

An institution's failure to submit disbursement records within the required timeframe may result in the Secretary rejecting all or part of the reported disbursement. Such failure may also result in an audit or program review finding or the initiation of an adverse action, such as a fine or other penalty for such failure, in accordance with subpart G of the General Provisions regulations in 34 CFR part 668.

Other Sources for Detailed Information

We publish a detailed discussion of the Federal student aid application process in the 2014–2015 *Federal Student Aid Handbook* and in the 2014–2015 *ISIR Guide.*

Additional information on the institutional reporting requirements for the Pell Grant Program, Iraq and Afghanistan Service Grant Program, Direct Loan Program, and TEACH Grant Program is included in the 2014–2015 *Common Origination and Disbursement (COD) Technical Reference.*

You may access these publications by selecting the ''iLibrary'' link at the Information for Financial Aid Professionals Web site at: *www.ifap.ed.gov.*

Applicable Regulations: The following regulations apply:

(1) Student Assistance General Provisions, 34 CFR part 668.

(2) Federal Pell Grant Program, 34 CFR part 690.

(3) William D. Ford Direct Loan Program, 34 CFR part 685.

(4) Teacher Education Assistance for College and Higher Education Grant Program, 34 CFR part 686.

FOR FURTHER INFORMATION CONTACT: Ian Foss, U.S. Department of Education, Federal Student Aid, 830 First Street NE., Union Center Plaza, room 114I1, Washington, DC 20202–5345. Telephone: (202) 377–3681 or by email: *ian.foss@ed.gov.*

If you use a telecommunications device for the deaf (TDD) or text telephone (TTY), call the Federal Relay Service, toll free, at 1–800–877–8339.

Accessible Format: Individuals with disabilities can obtain this document in an accessible format (e.g., braille, large print, audiotape, or compact disc) on request to the program contact person listed under **FOR FURTHER INFORMATION CONTACT.**

Electronic Access to This Document: The official version of this document is the document published in the **Federal Register**. Free Internet access to the official edition of the **Federal Register** and the Code of Federal Regulations is available via the Federal Digital System at: *www.gpo.gov/fdsys.* At this site you can view this document, as well as all other documents of this Department published in the **Federal Register**, in text or Adobe Portable Document Format (PDF). To use PDF you must have Adobe Acrobat Reader, which is available free at the site.

You may also access documents of the Department published in the **Federal Register** by using the article search feature at: www.federalregister.gov. Specifically, through the advanced search feature at this site, you can limit your search to documents published by the Department.

Program Authority: 20 U.S.C. 1070a, 1070a–1, 1070b–1070b–4, 1070g, 1070h, 1087a–1087j, and 1087aa–1087ii; 42 U.S.C. 2751–2756b.

Dated: July 7, 2014.

James F. Manning,

Chief of Staff of Federal Student Aid, delegated the authority to perform the functions and duties of the Chief Operating Officer of Federal Student Aid.

BILLING CODE 4000–01–P

Table A. Deadline Dates by Which a Student Must Submit the FAFSA, by Which the Institution Must Receive the Student's Institutional Student Information Record (ISIR) or Student Aid Report (SAR), and by Which the Institution Must Submit Verification Outcomes for Certain Students for the 2014-2015 Award Year

Who submits?	What is submitted?	Where is it submitted?	What is the deadline date for receipt?
Student	FAFSA--"FAFSA on the Web" (original or renewal)	Electronically to the Department's Central Processing System (CPS)	June 30, 2015[1]
	Signature page (if required)	To the address printed on the signature page	September 19, 2015
Student through an Institution	An electronic FAFSA (original or renewal)	Electronically to the Department's CPS using the "Electronic Data Exchange" (EDE) or "FAA Access to CPS Online"	June 30, 2015[1]
Student	A paper original FAFSA	To the address printed on the FAFSA or envelope provided with the form	June 30, 2015
Student	Electronic corrections to the FAFSA using "Corrections on the Web"	Electronically to the Department's CPS	September 19, 2015[1]
	Signature page (if required)	To the address printed on the signature page	September 19, 2015
Student through an Institution	Electronic corrections to the FAFSA	Electronically to the Department's CPS using the "Electronic Data Exchange" (EDE) or "FAA Access to CPS Online"	September 19, 2015[1]
Student	Paper corrections to the FAFSA using a SAR, including change of mailing and email addresses and change of institutions	To the address printed on the SAR	September 19, 2015
Student	Change of mailing and email addresses, change of institutions, or requests for a duplicate SAR	To the Federal Student Aid Information Center by calling 1-800-433-3243	September 19, 2015
Student	Except for Parent PLUS Loans and Direct Unsubsidized Loans made to a dependent student under HEA section 479A(a), a SAR with an official expected family contribution (EFC) calculated by the Department's CPS	To the institution	The earlier of: - The student's last date of enrollment for the 2014-2015 award year; or - September 28, 2015[2]

Student through CPS	Except for Parent PLUS Loans and Direct Unsubsidized Loans made to a dependent student under HEA section 479A(a), an ISIR with an official expected family contribution (EFC) calculated by the Department's CPS	To the institution from the Department's CPS	The earlier of: - The student's last date of enrollment for the 2014-2015 award year; or - September 28, 2015[2]
Student	Valid SAR (Pell Grant, FSEOG, FWS, Perkins Loan, and Direct Subsidized Loans)	To the institution	Except for a student meeting the conditions for a late disbursement under 34 CFR 668.164(g), the earlier of: - The student's last date of enrollment for the 2014-2015 award year; or - September 28, 2015[2]
Student through CPS	Valid ISIR (Pell Grant, FSEOG, FWS, Perkins Loan, and Direct Subsidized Loans)	To the institution from the Department's CPS	
Student	Valid SAR (Pell Grant, FSEOG, FWS, Perkins Loan, and Direct Subsidized Loans)	To the institution	For a student receiving a late disbursement under 34 CFR 668.164(g)(4)(i), the earlier of: - 180 days after the date of the institution's determination that the student withdrew or otherwise became ineligible; or - September 28, 2015[2]
Student through CPS	Valid ISIR (Pell Grant, FSEOG, FWS, Perkins Loan, and Direct Subsidized Loans)	To the institution from the Department's CPS	
Student	Verification documents	To the institution	The earlier of:[3] - 120 days after the student's last date of enrollment for the 2014-2015 award year; or - September 28, 2015[2]
Institution	Identity and high school completion verification results for a student selected for verification by the Department and placed in Verification Tracking Group V4 or V5	Electronically to the Department's CPS using "FAA Access to CPS Online"	60 days following the institution's first request to the student to submit the required V4 or V5 identity and high school completion documentation[4]

[1] The deadline for electronic transactions is 11:59 p.m. (Central Time) on the deadline date. Transmissions must be completed and accepted before 12:00 midnight to meet the deadline. If transmissions are started before 12:00 midnight but are not completed until after 12:00 midnight, those transmissions do not meet the deadline. In addition, any transmission submitted on or just prior to the deadline date that is rejected may not be reprocessed because the deadline will have passed by the time the user gets the information notifying him or her of the rejection.

[2] The date the ISIR/SAR transaction was processed by CPS is considered to be the date the institution received the ISIR or SAR regardless of whether the institution has downloaded the ISIR from its Student Aid Internet Gateway mailbox or when the student submits the SAR to the institution.

[3] Although the Secretary has set this deadline date for the submission of verification documents, if corrections are required, deadline dates for submission of paper or electronic corrections and, for Federal Pell Grant and applicants selected for verification, deadline dates for the submission of a valid SAR or valid ISIR to the institution must still be met. An institution may establish an earlier deadline for the submission of verification documents for purposes of the campus-based programs and the Federal Direct Loan Program, but it cannot be later than this deadline date.

[4] Note that changes to previously submitted Identity Verification Results must be updated within 30 days.

Table B. Pell Grant, Iraq and Afghanistan Service Grant, Direct Loan, and TEACH Grant Programs Deadline Dates for Disbursement Information by Institutions for the 2014-2015 Award Year or Processing Year[1]

Which program?	What is submitted?	Under what circumstances is it submitted?	Where is it submitted?	What are the deadlines for disbursement and for submission of records and information?
All (Pell Grant, Direct Loan, TEACH Grant, and Iraq and Afghanistan Service Grant programs)	An origination or disbursement record	The institution has made a disbursement.	To the Common Origination and Disbursement (COD) System using the Student Aid Internet Gateway (SAIG); or to the COD System using the COD Web site at: www.cod.ed.gov.	The earliest disbursement date is January 31, 2014. The earliest submission date for anticipated disbursement information is April 14, 2014. The earliest submission date for actual disbursement information is April 14, 2014, but no earlier than: (a) 7 calendar days prior to the disbursement date under the advance payment method or the Cash Monitoring #1 payment method; or (b) The date of disbursement under the Reimbursement or Cash Monitoring #2 payment methods.
Pell Grant, Iraq and	An origination or	The institution has made a	To COD using SAIG; or to	The deadline submission date[2] is the

Afghanistan Service Grant, and TEACH Grant programs	disbursement record	disbursement and will submit records on or before the deadline submission date.	COD using the COD Web site at: www.cod.ed.gov.	earlier of: (a) 15 calendar days after the institution makes a disbursement or becomes aware of the need to make an adjustment to previously reported disbursement data, except that records for disbursements made between January 31, 2014 and April 14, 2014 must be submitted no later than April 29, 2014; or (b) September 30, 2015.
Direct Loan Program	An origination or disbursement record	The institution has made a disbursement and will submit records on or before the deadline submission date.	To COD using SAIG; or to COD using the COD Web site at: www.cod.ed.gov.	The deadline submission date[2] is the earlier of: (a) 15 calendar days after the institution makes a disbursement or becomes aware of the need to make an adjustment to previously reported disbursement data, except that records of disbursements made between January 1, 2014, and March 23, 2014, may be submitted no later than April 7, 2014; or (b) July 29, 2016.
Pell Grant and Iraq and Afghanistan Service Grant programs	A downward adjustment to an origination or disbursement record	It is after the deadline submission date.	To COD using SAIG; or to COD using the COD Web site at: www.cod.ed.gov.	No later than September 30, 2020.

Pell Grant, TEACH Grant, Iraq and Afghanistan Service Grant, and Direct Loan programs	An origination or disbursement record.	After the deadline submission date the institution has received approval of its request for an extension to the deadline submission date. Requests for extensions to the established submission deadlines may be made for reasons, including, but not limited to: (a) A program review or initial audit finding under 34 CFR 690.83; (b) A late disbursement under 34 CFR 668.164(g); or (c) Disbursements previously blocked as a result of another institution failing to post a downward adjustment.	Via the COD Web site at: www.cod.ed.gov.	The earlier of: (a) When the institution is fully reconciled and is ready to submit all additional data for the program and the award year; or (b) September 30, 2020.
Direct Loan Program				When the institution is fully reconciled and is ready to submit all additional data for the program and the award year.
Pell Grant and Iraq and Afghanistan Service Grant programs	An origination or disbursement record.	It is after the deadline submission date and the institution has received approval of its request for an extension to the deadline submission date based on a natural disaster, other unusual circumstances, or an administrative error made by the Department.	Via the COD Web site at: www.cod.ed.gov.	The earlier of: (a) A date designated by the Secretary after consultation with the institution; or (b) February 1, 2016.
Pell Grant and Iraq and Afghanistan Service Grant programs	An origination or disbursement record.	It is after the deadline submission date and the institution has received approval of its request for administrative relief to extend the deadline submission date based on a	Via the COD Web site at: www.cod.ed.gov.	The earlier of: (a) 15 days after the student reenrolls; or (b) May 3, 2016.

		student's reentry to the institution within 180 days after initially withdrawing.[3]		

1 A COD Processing Year is a period of time in which institutions are permitted to submit Direct Loan records to the COD System that are related to a given award year. For a Direct Loan, the period of time includes loans that have a loan period covering any day in the 2014-2015 award year.

2 Transmissions must be completed and accepted before 12:00 midnight (Eastern Time) to meet the deadline. If transmissions are started before 12:00 midnight but are not completed until after 12:00 midnight, those transmissions will not meet the deadline. In addition, any transmission submitted on or just prior to the deadline date that is rejected may not be reprocessed because the deadline will have passed by the time the user gets the information notifying him or her of the rejection.

3 Applies only to students enrolled in clock-hour and nonterm credit-hour educational programs.

NOTE: The COD System must accept origination data for a student from an institution before it accepts disbursement information from the institution for that student. Institutions may submit origination and disbursement data for a student in the same transmission. However, if the origination data is rejected, the disbursement data is rejected.

BILLING CODE 4000–01–C
[FR Doc. 2014–16270 Filed 7–10–14; 8:45 am]
BILLING CODE 4000–01–P

DEPARTMENT OF EDUCATION

[Docket ID ED–2014–OSERS–0058]

Extension of Public Comment Period; Request for Information on Addressing Significant Disproportionality Under Section 618(d) of the Individuals With Disabilities Education Act

AGENCY: Office of Special Education and Rehabilitative Services, Department of Education.

ACTION: Notice extending public comment period.

SUMMARY: On June 19, 2014, we published in the **Federal Register** (79 FR 35154) a request for information (RFI) seeking comment on actions that the Department should take to address significant disproportionality based on race and ethnicity in the identification, placement, and discipline of children with disabilities. The RFI established a July 21, 2014, deadline for the submission of written comments. We are extending the comment period to July 28, 2014.

DATES: Comments must be received on or before July 28, 2014.

ADDRESSES: Submit your comments through the Federal eRulemaking Portal or via postal mail, commercial delivery, or hand delivery. We will not accept comments by fax or by email. Please submit your comments only one time, in order to ensure that we do not receive duplicate copies. In addition, please include the Docket ID at the top of your comments.

- *Federal eRulemaking Portal:* Go to *www.regulations.gov* to submit your comments electronically. Information on using Regulations.gov, including instructions for accessing agency documents, submitting comments, and viewing the docket is available on the site under ''Are you new to the site?''
- *U.S. Mail, Commercial Delivery, or Hand Delivery:*

If you mail or deliver your comments about these proposed regulations, address them to the contact person listed under **FOR FURTHER INFORMATION CONTACT**.

- *Privacy Note:* The Department's policy is to make all comments received from members of the public available for public viewing in their entirety on the Federal eRulemaking Portal at *www.regulations.gov.* Therefore, commenters should be careful to include in their comments only information that they wish to make publicly available.

FOR FURTHER INFORMATION CONTACT: Larry Ringer, U.S. Department of Education, 400 Maryland Avenue SW., room 4032, Potomac Center Plaza, Washington, DC 20202–2600. Telephone: (202) 245–7496.

If you use a telecommunications device for the deaf (TDD) or a text telephone (TTY), call the Federal Relay Service (FRS), toll free, at 1–800–877–8339.

SUPPLEMENTARY INFORMATION:

Background:

On June 19, 2014, we published in the **Federal Register** an RFI seeking comment on actions that the Department should take to address significant disproportionality based on race and ethnicity in the identification, placement, and discipline of children with disabilities. The RFI established July 21, 2014, as the deadline for receiving comments. However, from June 19–25, 2014, the RFI was not consistently available on *www.regulations.gov,* the Government-wide portal that allows the public to comment electronically on documents in the **Federal Register**. To ensure that anyone unable to comment during that period has the opportunity to do so, we are extending the deadline for comments to July 28, 2014.

Accessible Format: Individuals with disabilities can obtain this document in an accessible format (e.g., braille, large print, audiotape, or compact disc) on request to the contact person listed under **FOR FURTHER INFORMATION CONTACT**.

Electronic Access to This Document: The official version of this document is the document published in the **Federal Register**. Free Internet access to the official edition of the **Federal Register** and the Code of Federal Regulations is available via the Federal Digital System at: *www.gpo.gov/fdsys.* At this site you can view this document, as well as all other documents of this Department published in the **Federal Register**, in text or Adobe Portable Document Format (PDF). To use PDF, you must have Adobe Acrobat Reader, which is available free at this site.

You may also access documents of the Department published in the **Federal Register** by using the article search feature at: *www.federalregister.gov.* Specifically, through the advanced search feature at this site, you can limit your search to documents published by the Department.

Dated: July 8, 2014.

Michael K. Yudin,

Acting Assistant Secretary for Special Education and Rehabilitative Services.

[FR Doc. 2014–16300 Filed 7–10–14; 8:45 am]
BILLING CODE 4000–01–P

DEPARTMENT OF ENERGY

Quadrennial Energy Review: Notice of Public Meeting

AGENCY: Office of Energy Policy and Systems Analysis, Secretariat, Quadrennial Energy Review Task Force, Department of Energy.

ACTION: Notice of public meeting.

SUMMARY: At the direction of the President, the U.S. Department of Energy (DOE or Department), as the Secretariat for the Quadrennial Energy Review Task Force (QER Task Force) will convene a public meeting to discuss and receive comments on issues related to the Quadrennial Energy Review.

DATES: The sixth public meeting will be held on July 28, 2014, beginning at 9:00 a.m. Mountain Time. Written comments are welcome, especially following the public meeting, and should be submitted within 60 days of the meeting.

ADDRESSES: The sixth meeting will be held at: University of Colorado-Denver, Auraria Campus, St. Cajetan's Center, 1190 9th Street, Denver, Colorado 80204.

You may submit written comments to: *QERComments@hq.doe.gov* or by U.S. mail to the Office of Energy Policy and Systems Analysis, EPSA–60, QER Meeting Comments, U.S. Department of Energy, 1000 Independence Avenue SW., Washington, DC 20585–0121.

For the sixth public meeting, please title your comment ''Quadrennial Energy Review: Comment on the Public Meeting Gas-Electricity Interdependence.''

FOR FURTHER INFORMATION CONTACT: Ms. Adonica Renee Pickett, EPSA–90, U.S. Department of Energy, Office of Energy Policy and Systems Analysis, 1000 Independence Avenue SW., Washington, DC 20585–0121. *Telephone:* (202) 586–9168 *Email:Adonica.Pickett@hq.doe.gov.*

SUPPLEMENTARY INFORMATION: On January 9, 2014, President Obama issued a *Presidential Memorandum –Establishing a Quadrennial Energy Review.* To accomplish this review, the Presidential Memorandum establishes a Quadrennial Energy Review Task Force to be co-chaired by the Director of the

Office of Science and Technology Policy, and the Director of the Domestic Policy Council. Under the Presidential Memorandum, the Secretary of Energy shall provide support to the Task Force, including support for coordination activities related to the preparation of the Quadrennial Energy Review Report, policy analysis and modeling, and stakeholder engagement.

The DOE, as the Secretariat for the Quadrennial Energy Review Task Force, will hold a series of public meetings to discuss and receive comments on issues related to the Quadrennial Energy Review.

The initial focus for the Quadrennial Energy Review will be our Nation's infrastructure for transporting, transmitting, storing and delivering energy. Our current infrastructure is increasingly challenged by transformations in energy supply, markets, and patterns of end use; issues of aging and capacity; impacts of climate change; and cyber and physical threats. Any vulnerability in this infrastructure may be exacerbated by the increasing interdependencies of energy systems with water, telecommunications, transportation, and emergency response systems. The first Quadrennial Energy Review Report will serve as a roadmap to help address these challenges.

The Department of Energy has a broad role in energy policy development and the largest role in implementing the Federal Government's energy research and development portfolio. Many other executive departments and agencies also play key roles in developing and implementing policies governing energy resources and consumption, as well as associated environmental impacts. In addition, non-Federal actors are crucial contributors to energy policies. Because most energy and related infrastructure is owned by private entities, investment by and engagement of the private sector is necessary to develop and implement effective policies. State and local policies; the views of nongovernmental, environmental, faith-based, labor, and other social organizations; and contributions from the academic and non-profit sectors are also critical to the development and implementation of effective energy policies.

An interagency Quadrennial Energy Review Task Force, which includes members from all relevant executive departments and agencies (agencies), will develop an integrated review of energy policy that integrates all of these perspectives. It will build on the foundation provided in the Administration's *Blueprint for a Secure Energy Future* of March 30, 2011, and *Climate Action Plan* released on June 25, 2013. The Task Force will offer recommendations on what additional actions it believes would be appropriate. These may include recommendations on additional executive or legislative actions to address the energy challenges and opportunities facing the Nation.

July 28, 2014 Public Meeting: Gas-Electricity Interdependence

On July 28, 2014, the DOE will hold a public meeting in Denver, Colorado. The July 28, 2014 public meeting will feature facilitated panel discussions, followed by an open microphone session. Persons desiring to speak during the open microphone session at the public meeting should come prepared to speak for no more than 5 minutes and will be accommodated on a first- come, first- served basis, according to the order in which they register to speak on a sign-in sheet available at the meeting location, on the morning of the meeting.

In advance of the meeting, DOE anticipates making publicly available a briefing memorandum providing useful background information regarding the topics under discussion at the meeting. DOE will post this memorandum on its Web site: *http://energy.gov*.

Submitting comments via email. Submitting comments by email to the QER email address will require you to provide your name and contact information in the transmittal email. Your contact information will be viewable to DOE staff only. Your contact information will not be publicly viewable except for your first and last names, organization name (if any), and submitter representative name (if any). Your contact information will be publicly viewable if you include it in the comment itself or in any documents attached to your comment. Any information that you do not want to be publicly viewable should not be included in your comment, nor in any document attached to your comment. Otherwise, persons viewing comments will see only first and last names, organization names, correspondence containing comments, and any documents submitted with the comments.

Do not submit to the QER email address (*QERcomments@hq.doe.gov*) information for which disclosure is restricted by statute, such as trade secrets and commercial or financial information (hereinafter referred to as Confidential Business Information (CBI)). Comments submitted to the QER email address cannot be claimed as CBI. Comments received through the email address will waive any CBI claims for the information submitted. For information on submitting CBI, see the Confidential Business Information section, below.

If you do not want your personal contact information to be publicly viewable, do not include it in your comment or any accompanying documents. Instead, provide your contact information in a cover letter. Include your first and last names, email address, telephone number, and optional mailing address. The cover letter will not be publicly viewable as long as it does not include any comments.

Include contact information each time you submit comments, data, documents, and other information to DOE. If you submit via mail or hand delivery/courier, please provide all items on a CD, if feasible, in which case it is not necessary to submit printed copies. No telefacsimiles (faxes) will be accepted.

Comments, data, and other information submitted to DOE electronically should be provided in PDF (preferred), Microsoft Word or Excel, WordPerfect, or text (ASCII) file format. Provide documents that are not secured, written in English, and are free of any defects or viruses. Documents should not contain special characters or any form of encryption and, if possible, they should carry the electronic signature of the author.

Confidential Business Information. Pursuant to *10 CFR 1004.11,* any person submitting information that he or she believes to be confidential and exempt by law from public disclosure should submit via email, postal mail, or hand delivery/courier two well-marked copies: One copy of the document marked ''confidential'' including all the information believed to be confidential, and one copy of the document marked ''non-confidential'' with the information believed to be confidential deleted. Submit these documents via email or on a CD, if feasible. DOE will make its own determination about the confidential status of the information and treat it according to its determination. Confidential information should be submitted to the Confidential QER email address: *QERConfidential@hq.doe.gov*.

Factors of interest to DOE when evaluating requests to treat submitted information as confidential include: (1) A description of the items; (2) whether and why such items are customarily treated as confidential within the industry; (3) whether the information is generally known by or available from other sources; (4) whether the information has previously been made available to others without obligation concerning its confidentiality; (5) an

explanation of the competitive injury to the submitting person which would result from public disclosure; (6) when such information might lose its confidential character due to the passage of time; and (7) why disclosure of the information would be contrary to the public interest. It is DOE's policy that all comments may be included in the public docket, without change and as received, including any personal information provided in the comments (except information deemed to be exempt from public disclosure).

Issued in Washington, DC, on July 8, 2014.

Michele Torrusio,

QER Secretariat, QER Interagency Task Force, U.S. Department of Energy.

[FR Doc. 2014–16241 Filed 7–10–14; 8:45 am]

BILLING CODE 6450–01–P

DEPARTMENT OF ENERGY

Bonneville Power Administration

Hot Springs to Anaconda Transmission Line Rebuild Project

AGENCY: Bonneville Power Administration (BPA), Department of Energy (DOE). ACTION: Notice of intent to prepare an Environmental Impact Statement (EIS) and notice of floodplain and wetland assessment.

SUMMARY: In accordance with the National Environmental Policy Act (NEPA), BPA intends to prepare an EIS on its proposed rebuild of approximately 120 miles of existing 230-kiliovolt (kV) wood-pole transmission line that runs through Sanders, Lake, Missoula, Granite, Powell, and Deer Lodge counties, Montana. The deteriorated condition of the more than 60-year-old line compromises BPA's ability to maintain reliable electric service, and poses a safety risk to the public and maintenance crews.

With this notice, BPA is initiating the public scoping process for the EIS and is requesting comments about the potential environmental impacts it should consider as it prepares the EIS for the proposed project. In accordance with DOE regulations for compliance with floodplain and wetland environmental review requirements, BPA will prepare a floodplain and wetlands assessment that identifies, evaluates, and as appropriate, implements actions to avoid or minimize potential harm to or within any affected floodplains and wetlands. The assessment will be included in the EIS.

DATES: Written comments are due to the address below by August 12, 2014. Comments may also be made at three EIS scoping meetings to be held on the 29th, 30th, and 31st of July, 2014 at the addresses below.

ADDRESSES: Comments and suggestions on the proposed scope of the Draft EIS for this project and requests to be placed on the project mailing list may be mailed by letter to Bonneville Power Administration, Public Affairs—DKC–7, P.O. Box 14428, Portland, OR 97292–4428. Or you may FAX them to 503–230–3285; submit them on-line at *www.bpa.gov/comment;* or email them to *comment@bpa.gov.* Scoping meetings will be held in Montana from 4:00 p.m. to 7:00 p.m. at the following locations: July 29, 2014 at the Missoula Fire Department, Station 4, 3011 Latimor Street, Missoula; on July 30, 2014 at the Dixon Senior Citizens Center, 106 3rd Street, Dixon; and on July 31, 2014 at the William K. Kohrs Memorial Library, 501 Missouri Avenue, Deer Lodge. At these informal, open-house meetings, BPA will provide project information and maps. Members of the project team will be available to answer questions and accept verbal and written comments.

FOR FURTHER INFORMATION CONTACT: Doug Corkran, Environmental Coordinator, Bonneville Power Administration—KEC–4, P.O. Box 3621, Portland, Oregon, 97208–3621; toll-free telephone number 1–800–622–4519; direct number 503–230–7646; fax number 503–230–5699; or email at *dfcorkran@bpa.gov.* You may also contact Chad Hamel, Project Manager, Bonneville Power Administration—TEP–TPP–1, P.O. Box 3621, Portland, Oregon, 97208–3621; toll-free telephone 1–800–622–4519; direct telephone 360–619–6557; or email *cjhamel@bpa.gov.* Additional information can be found at the project Web site: *www.bpa.gov/goto/HotSpringsAnaconda.*

SUPPLEMENTARY INFORMATION: BPA proposes to rebuild three existing wood-pole transmission lines—the Hot Springs-Rattlesnake, Rattlesnake-Garrison, and Garrison-Anaconda lines—that run consecutively from Hot Springs, Montana to Anaconda, Montana. No major work has been done on the lines since they were built in 1952. Many of the structures, the electric wire (conductor), and associated structural components (cross arms, insulators, and dampers) are physically worn and structurally unsound in places. The wood transmission poles have lasted beyond the expected 55 to 60 years and now need to be replaced due to age, rot, and deterioration. Rebuilding the deteriorated line would maintain reliable electrical service and avoid risks to the safety of the public and maintenance crews.

The project would include removing and replacing existing wood-pole structures and components, as well as the conductor; improving access roads and establishing temporary access where needed; removing trees adjacent to the line that may cause a threat to reliability; developing temporary staging areas for storage of project materials; and revegetating areas disturbed by construction activities. The existing structures would be replaced with structures of similar design within or near to their existing locations. The line would continue to operate at 230 kV.

Proposed activities would also include the installation of new line disconnect switches at the Hot Springs and Garrison substations, and upgrading the existing fiber optic line that is attached to the Hot Springs-Rattlesnake and Rattlesnake-Garrison transmission line structures.

Alternatives Proposed for Consideration: In addition to the Proposed Action, BPA will evaluate the No Action Alternative as well as any additional viable alternatives brought forward during the scoping process. Under the No Action Alternative, BPA would not rebuild the line and would make repairs on an as-needed or emergency basis.

Public Participation and Identification of Environmental Issues: The potential environmental issues identified for most transmission line projects include land use, cultural resources, visual impacts, sensitive plants and animals, erosion/soils, wetlands, floodplains, and fish and water resources. The existing lines cross about 50 miles of the Flathead Indian Reservation, small portions of the Lolo and Beaverhead-Deer Lodge National Forests, several miles of State land, as well as private land.

BPA has established a 30-day scoping period during which affected landowners, concerned citizens, special interest groups, local governments, and any other interested parties are invited to comment on the scope of the proposed EIS. Scoping will help BPA ensure that a full range of issues related to this proposal is addressed in the EIS, and also help identify significant or potentially significant impacts that may result from the proposed project. When completed, the Draft EIS will be circulated for review and comment, and BPA will hold at least one public comment meeting for the Draft EIS. BPA will consider and respond in the Final EIS to comments received on the Draft EIS. BPA's subsequent decision will be documented in a Record of Decision.

Issued in Portland, Oregon, on June 19, 2014.

Elliot Mainzer,

Administrator and Chief Executive Officer.

[FR Doc. 2014–16243 Filed 7–10–14; 8:45 am]

BILLING CODE 6450–01–P

DEPARTMENT OF ENERGY

Federal Energy Regulatory Commission

[Docket Nos. CP14–504–000; PF14–3–000]

Transcontinental Gas Pipe Line Company, LLC; Notice of Application

Take notice that on June 23, 2014, Transcontinental Gas Pipe Line Company LLC (Transco), 2800 Post Oak Boulevard, Houston, Texas 77056, filed in the above referenced docket an application pursuant to section 7(c) of the Natural Gas Act (NGA), and Part 157 of the Commission's regulations requesting authorization to construct and operate the Rock Springs Expansion Project (Project), all as more fully set forth in the application which is on file with the Commission and open to public inspection. The filing is available for review at the Commission in the Public Reference Room or may be viewed on the Commission's Web site web at *http://www.ferc.gov* using the ''eLibrary'' link. Enter the docket number excluding the last three digits in the docket number field to access the document. For assistance, contact FERC at *FERCOnlineSupport@ferc.gov* or call toll-free, (886) 208–3676 or TYY, (202) 502–8659.

Any questions concerning this application may be directed to Bill Hammons, P.O. Box 1396, Houston, Texas 77251, by telephone at (713) 215–2130.

Specifically, the Project consists of approximately 11.17 miles, 20-inch diameter pipeline lateral, a 4,000 horsepower compression station, and appurtenant facilities in Lancaster County, Pennsylvania and Cecil County, Maryland. Transco has executed a binding precedent agreement with ODEC for 100% of the capacity. The Project will enable Transco to provide 192 million cubic feet per day of incremental firm transportation capacity from Transco's Station 210 Zone 6 Pool in Mercer County, New Jersey to Old Dominion Electric Cooperative's (ODEC) proposed Wildcat Point Generating Facility in Cecil County, Maryland. Transco proposes that the firm transportation service will be rendered pursuant to Rate Schedule FT of Transco's FERC Gas Tariff and Transco's blanket certificate under Part 284 (G) of the Commission's regulations. The approximate cost for the Project is $79,476,150.

On October 16, 2013, the Commission staff granted Transco's request to utilize the Pre-Filing Process and assigned Docket No. PF14–3–000 to staff activities involved in the Project. Now, as of the filing of the June 23, 2014 application, the Pre-Filing Process for this project has ended. From this time forward, this proceeding will be conducted in Docket No. CP14–504–000, as noted in the caption of this Notice.

Pursuant to section 157.9 of the Commission's rules (18 CFR 157.9), within 90 days of this Notice, the Commission staff will either: Complete its environmental assessment (EA) and place it into the Commission's public record (eLibrary) for this proceeding; or issue a Notice of Schedule for Environmental Review. If a Notice of Schedule for Environmental Review is issued, it will indicate, among other milestones, the anticipated date for the Commission staff's issuance of the final environmental impact statement (FEIS) or EA for this proposal. The filing of the EA in the Commission's public record for this proceeding or the issuance of a Notice of Schedule for Environmental Review will serve to notify federal and state agencies of the timing for the completion of all necessary reviews, and the subsequent need to complete all federal authorizations within 90 days of the date of issuance of the Commission staff's FEIS or EA.

There are two ways to become involved in the Commission's review of this project. First, any person wishing to obtain legal status by becoming a party to the proceedings for this project should, on or before the comment date stated below file with the Federal Energy Regulatory Commission, 888 First Street NE., Washington, DC 20426, a motion to intervene in accordance with the requirements of the Commission's Rules of Practice and Procedure (18 CFR 385.214 or 385.211) and the Regulations under the NGA (18 CFR 157.10). A person obtaining party status will be placed on the service list maintained by the Secretary of the Commission and will receive copies of all documents filed by the applicant and by all other parties. A party must submit seven copies of filings made in the proceeding with the Commission and must mail a copy to the applicant and to every other party. Only parties to the proceeding can ask for court review of Commission orders in the proceeding.

However, a person does not have to intervene in order to have comments considered. The second way to participate is by filing with the Secretary of the Commission, as soon as possible, an original and two copies of comments in support of or in opposition to this project. The Commission will consider these comments in determining the appropriate action to be taken, but the filing of a comment alone will not serve to make the filer a party to the proceeding. The Commission's rules require that persons filing comments in opposition to the project provide copies of their protests only to the party or parties directly involved in the protest.

Persons who wish to comment only on the environmental review of this project should submit an original and two copies of their comments to the Secretary of the Commission. Environmental commentors will be placed on the Commission's environmental mailing list, will receive copies of the environmental documents, and will be notified of meetings associated with the Commission's environmental review process. Environmental commentors will not be required to serve copies of filed documents on all other parties. However, the non-party commentors will not receive copies of all documents filed by other parties or issued by the Commission (except for the mailing of environmental documents issued by the Commission) and will not have the right to seek court review of the Commission's final order.

The Commission strongly encourages electronic filings of comments, protests and interventions in lieu of paper using the ''eFiling'' link at *http://www.ferc.gov.* Persons unable to file electronically should submit an original and 7 copies of the protest or intervention to the Federal Energy Regulatory Commission, 888 First Street NE., Washington, DC 20426.

Comment Date: 5:00 p.m. Eastern Time on July 24, 2014.

Dated: July 3, 2014.

Kimberly D. Bose,

Secretary.

[FR Doc. 2014–16194 Filed 7–10–14; 8:45 am]

BILLING CODE 6717–01–P

DEPARTMENT OF ENERGY

Federal Energy Regulatory Commission

[Docket No. EL14–80–000]

Calpine Construction Finance Company, L.P. v. Tampa Electric Company; Notice of Complaint

Take notice that on July 1, 2014, pursuant to Rule 206 of the Federal Energy Regulatory Commission's (Commission) Rules of Practice and Procedure, 18 CFR 385.206 and sections 206 and 306 of the Federal Power Act, 16 U.S.C. 824(e) and 825(e), Calpine Construction Finance Company, L.P. (Complainant or CCFC) filed a formal complaint against Tampa Electric Company (Respondent or TECO) requesting that the Commission order TECO to permit CCFC to defer the commencement of service under the transmission service agreement between CCFC and TECO pursuant to section 17.7 of TECO's Open Access Transmission Tariff.

CCFC certifies that copies of the complaint were served on the contacts for the TECO as listed on the Commission's list of Corporate Officials.

Any person desiring to intervene or to protest this filing must file in accordance with Rules 211 and 214 of the Commission's Rules of Practice and Procedure (18 CFR 385.211, 385.214). Protests will be considered by the Commission in determining the appropriate action to be taken, but will not serve to make protestants parties to the proceeding. Any person wishing to become a party must file a notice of intervention or motion to intervene, as appropriate. The Respondent's answer and all interventions, or protests must be filed on or before the comment date. The Respondent's answer, motions to intervene, and protests must be served on the Complainants.

The Commission encourages electronic submission of protests and interventions in lieu of paper using the ''eFiling'' link at *http://www.ferc.gov.* Persons unable to file electronically should submit an original and 5 copies of the protest or intervention to the Federal Energy Regulatory Commission, 888 First Street NE., Washington, DC 20426.

This filing is accessible on-line at *http://www.ferc.gov*, using the ''eLibrary'' link and is available for review in the Commission's Public Reference Room in Washington, DC. There is an ''eSubscription'' link on the Web site that enables subscribers to receive email notification when a document is added to a subscribed docket(s). For assistance with any FERC Online service, please email *FERCOnlineSupport@ferc.gov*, or call (866) 208–3676 (toll free). For TTY, call (202) 502–8659.

Comment Date: 5:00 p.m. Eastern Time on July 21, 2014.

Dated: July 2, 2014.

Kimberly D. Bose,

Secretary.

[FR Doc. 2014–16198 Filed 7–10–14; 8:45 am]

BILLING CODE 6717–01–P

DEPARTMENT OF ENERGY

Federal Energy Regulatory Commission

[Docket No. ER13–102–003]

New York Independent System Operator, Inc.; Notice of Compliance Filing

Take notice that on July 2, 2014, New York Independent System Operator, Inc. (NYISO) submitted a compliance filing requesting deferral of the effective date of January 1, 2014 for its Open Access Transmission Tariff revisions filed to comply with the requirements of Order Nos. 1000 and 1000–A.[1] NYISO requests that the Commission immediately issue a notice providing for a shortened comment period, so as not to delay Commission action in underlying proceedings.

We grant NYISO's request for shortened comment period, with comments due on July 14, 2014. Any person desiring to intervene or to protest this filing must file in accordance with Rules 211 and 214 of the Commission's Rules of Practice and Procedure (18 CFR 385.211, 385.214). Protests will be considered by the Commission in determining the appropriate action to be taken, but will not serve to make protestants parties to the proceeding. Any person wishing to become a party must file a notice of intervention or motion to intervene, as appropriate. Such notices, motions, or protests must be filed on or before the comment date. On or before the comment date, it is not necessary to serve motions to intervene or protests on persons other than the Applicant.

The Commission encourages electronic submission of protests and interventions in lieu of paper using the ''eFiling'' link at *http://www.ferc.gov.* Persons unable to file electronically should submit an original and 5 copies of the protest or intervention to the Federal Energy Regulatory Commission, 888 First Street NE., Washington, DC 20426.

This filing is accessible on-line at *http://www.ferc.gov,* using the ''eLibrary'' link and is available for review in the Commission's Public Reference Room in Washington, DC. There is an ''eSubscription'' link on the Web site that enables subscribers to receive email notification when a document is added to a subscribed docket(s). For assistance with any FERC Online service, please email *FERCOnlineSupport@ferc.gov,* or call (866) 208–3676 (toll free). For TTY, call (202) 502–8659.

Comment Date: 5:00 p.m. Eastern Time on July 14, 2014.[2]

Dated: July 3, 2014.

Kimberly D. Bose,

Secretary.

[FR Doc. 2014–16199 Filed 7–10–14; 8:45 am]

BILLING CODE 6717–01–P

DEPARTMENT OF ENERGY

Federal Energy Regulatory Commission

[Docket No. EL14–56–000]

LoneStar Wind Power Company, NorthStar Wind Power Company, WindStar Power Company, v. South Texas Electric Co-Operative; Notice of Amended Petition For Enforcement

Take notice that on June 30, 2014, LoneStar Wind Power Company, NorthStar Wind Power Company, and WindStar Power Company filed an amended petition supplementing its request, originally filed on May 27, 2014, for the Federal Energy Regulatory Commission (Commission) to exercise its authority and initiate enforcement action against the South Texas Electric Co-Operative to ensure that PURPA regulations are properly and lawfully implemented.

Any person desiring to intervene or to protest this filing must file in accordance with Rules 211 and 214 of the Commission's Rules of Practice and Procedure (18 CFR 385.211, 385.214). Protests will be considered by the Commission in determining the appropriate action to be taken, but will not serve to make protestants parties to the proceeding. Any person wishing to

---

[1] *Transmission Planning and Cost Allocation by Transmission Owning and Operating Public Utilities,* Order No. 1000, 76 FR 49,842 (Aug. 11, 2011), FERC Stats. & Regs. ¶ 31,323 (2011), *order on reh'g,* Order No. 1000–A, 77 FR. 32,184 (May 31, 2012), 139 FERC ¶ 61,132 (2012).

[2] This notice is not being issued in response to any motion for extension of time for the submission of interventions or protests. Specific motions for extension of time will be addressed separately.

become a party must file a notice of intervention or motion to intervene, as appropriate. Such notices, motions, or protests must be filed on or before the comment date. On or before the comment date, it is not necessary to serve motions to intervene or protests on persons other than the Applicant.

The Commission encourages electronic submission of protests and interventions in lieu of paper using the ''eFiling'' link at *http://www.ferc.gov*. Persons unable to file electronically should submit an original and 5 copies of the protest or intervention to the Federal Energy Regulatory Commission, 888 First Street, NE., Washington, DC 20426.

This filing is accessible on-line at *http://www.ferc.gov*, using the ''eLibrary'' link and is available for review in the Commission's Public Reference Room in Washington, DC. There is an ''eSubscription'' link on the Web site that enables subscribers to receive email notification when a document is added to a subscribed docket(s). For assistance with any FERC Online service, please email *FERCOnlineSupport@ferc.gov*, or call (866) 208–3676 (toll free). For TTY, call (202) 502–8659.

Comment Date: 5:00 p.m. Eastern Time on July 21, 2014.

Dated: July 3, 2014.

Kimberly D. Bose,

Secretary.

[FR Doc. 2014–16197 Filed 7–10–14; 8:45 am]

BILLING CODE 6717–01–P

DEPARTMENT OF ENERGY

Federal Energy Regulatory Commission

[Project No. 619–158]

Pacific Gas and Electric Company and the City of Santa Clara; Notice of Environmental Site Review

On Monday, August 4, 2014, the Federal Energy Regulatory Commission (Commission) staff and the Pacific Gas and Electric Company and the City of Santa Clara (licensees) will conduct an environmental site review of the Bucks Creek Hydropower Project. The project is located on Bucks, Grizzly, and Milk Ranch Creeks in Plumas County, California.

The site review is open to the public and resource agencies and will occur from 9:00 a.m. to about 4:00 p.m. (Pacific Daylight Time). The following itinerary provides general guidance only and the specific itinerary including approximate times may change.

9:00 a.m. Meet at Bucks Lakeshore Resort [16001 Bucks Lake Rd., Quincy, CA 95971, (530) 283–2848]

- Safety briefing
- Project overview

9:30 a.m. Bucks Lake Recreation Features and Dam

- All recreation features in license
- Bucks storage dam

Noon Lunch (bring your own)

12:45 p.m. Lower Bucks Lake Recreation Features and Dam

- All recreation features in license, and view Lower Bucks dam from nearest recreation facility
- At Grizzly intake tower, show pictures of Three Lakes, the road to Three Lakes dam, and Milk Ranch conduit (not visiting these sites due to long distance, treacherous road conditions without specialized vehicle, and visitor safety)

2:00 p.m. Grizzly Forebay Features

- En route, stop at Grizzly powerhouse tunnel portal and view Grizzly penstock
- All recreation features in license, and view Grizzly forebay dam from nearest recreation facility
- Show pictures of Grizzly and Bucks powerhouses, Bucks penstock and other features (not visiting these sites due to specialized personal protective gear requirements and visitor safety)

4:00 p.m. Finish at Bucks Lakeshore Resort

To better support the safety of the group, participants will be requested to car pool in vehicles provided by the licensees. Participants are asked not to attempt to join the site review after it departs the initial meeting location. Participants must wear appropriate footwear (i.e., no sandals or open-toed shoes). Some brief walking over dirt trails may be needed.

To appropriately accommodate persons interested in attending the site tour, participants must contact Alan Mitchnick, FERC Team Leader, at (202) 502–6074 or *alan.mitchnick@ferc.gov*, no later than Monday, July 28, 2014.

Dated: July 2, 2014.

Kimberly D. Bose,

Secretary.

[FR Doc. 2014–16200 Filed 7–10–14; 8:45 am]

BILLING CODE 6717–01–P

DEPARTMENT OF ENERGY

Federal Energy Regulatory Commission

[Docket No. CP14–512–000]

Enbridge Offshore Facilities, LLC; Notice of Petition for Declaratory Order

Take notice that on July 1, 2014, Enbridge Offshore Facilities, LLC (EOF) pursuant to Rule 207(a)(2) of the Federal Energy Regulatory Commission's Rules of Practice and Procedure, 18 CFR 385.207(a)(2) (2013), filed a petition for declaratory order requesting that the Commission confirm that the proposed EOF facilities and Gas Delivery Line described in this petition, will not be engaged in the transportation of natural gas subject to the Commission's jurisdiction under the Natural Gas Act, 15 U.S.C. 717, *et seq.*

Any person desiring to intervene or to protest this filing must file in accordance with Rules 211 and 214 of the Commission's Rules of Practice and Procedure (18 CFR 385.211, 385.214). Protests will be considered by the Commission in determining the appropriate action to be taken, but will not serve to make protestants parties to the proceeding. Any person wishing to become a party must file a notice of intervention or motion to intervene, as appropriate. Such notices, motions, or protests must be filed on or before the comment date. On or before the comment date, it is not necessary to serve motions to intervene or protests on persons other than the Applicant.

The Commission encourages electronic submission of protests and interventions in lieu of paper using the ''eFiling'' link at *http://www.ferc.gov.* Persons unable to file electronically should submit an original and 5 copies of the protest or intervention to the Federal Energy Regulatory Commission, 888 First Street NE., Washington, DC 20426.

This filing is accessible on-line at *http://www.ferc.gov*, using the ''eLibrary'' link and is available for review in the Commission's Public Reference Room in Washington, DC. There is an ''eSubscription'' link on the Web site that enables subscribers to receive email notification when a document is added to a subscribed docket(s). For assistance with any FERC Online service, please email *FERCOnlineSupport@ferc.gov*, or call (866) 208–3676 (toll free). For TTY, call (202) 502–8659.

Comment Date: 5:00 p.m. Eastern Time on July 15, 2014

Dated: July 3, 2014.

Kimberly D. Bose,

Secretary.

[FR Doc. 2014–16196 Filed 7–10–14; 8:45 am]

BILLING CODE 6717–01–P

DEPARTMENT OF ENERGY

Federal Energy Regulatory Commission

[Docket No. CP14–505–000]

WBI Energy Transmission, Inc.; Notice of Request Under Blanket Authorization

Take notice that on June 24, 2014, WBI Energy Transmission, Inc., (WBI Energy), 1250 West Century Avenue, Bismarck, North Dakota 58503, filed in Docket No. CP14–505–000, a prior notice request pursuant to sections 157.205 and 157.210 of the Commission's regulations under the Natural Gas Act to replace natural gas compression facilities at its Baker Compressor Station located in Fallon County, Montana. Specifically, WBI Energy proposes to replace two Ingersoll Rand 6SVG 330 horsepower (HP) natural gas fired compressor units (Units 6 and 7) with one Ajax 2802LE 384 HP natural gas driven compressor unity (Unit 10). The certificated horsepower at the Baker Compressor Station will decrease from 4,780 HP to 4,504 HP, all as more fully set forth in the application which is on file with the Commission and open to public inspection. The filing may also be viewed on the Web at *http://www.ferc.gov* using the ''eLibrary'' link. Enter the docket number excluding the last three digits in the docket number field to access the document. For assistance, contact FERC at *FERCOnlineSupport@ferc.gov* or call toll-free, (866) 208–3676 or TTY, (202) 502–8659.

Any questions regarding this Application should be directed to Keith A. Tiggelaar, Director of Regulatory Affairs, WBI Energy Transmission, Inc., 1250 West Century Avenue, Bismarck, North Dakota 58503, or by calling (701) 530–1560, or by email *keith.tiggelaar@wbienergy.com.*

Any person may, within 60 days after the issuance of the instant notice by the Commission, file pursuant to Rule 214 of the Commission's Procedural Rules (18 CFR 385.214) a motion to intervene or notice of intervention. Any person filing to intervene or the Commission's staff may, pursuant to section 157.205 of the Commission's Regulations under the NGA (18 CFR 157.205) file a protest to the request. If no protest is filed within the time allowed therefore, the proposed activity shall be deemed to be authorized effective the day after the time allowed for protest. If a protest is filed and not withdrawn within 30 days after the time allowed for filing a protest, the instant request shall be treated as an application for authorization pursuant to section 7 of the NGA.

Pursuant to section 157.9 of the Commission's rules, 18 CFR 157.9, within 90 days of this Notice the Commission staff will either: omplete its environmental assessment (EA) and place it into the Commission's public record (eLibrary) for this proceeding; or issue a Notice of Schedule for Environmental Review. If a Notice of Schedule for Environmental Review is issued, it will indicate, among other milestones, the anticipated date for the Commission staff's issuance of the final environmental impact statement (FEIS) or EA for this proposal. The filing of the EA in the Commission's public record for this proceeding or the issuance of a Notice of Schedule for Environmental Review will serve to notify federal and state agencies of the timing for the completion of all necessary reviews, and the subsequent need to complete all federal authorizations within 90 days of the date of issuance of the Commission staff's FEIS or EA.

Persons who wish to comment only on the environmental review of this project should submit an original and two copies of their comments to the Secretary of the Commission. Environmental commenter's will be placed on the Commission's environmental mailing list, will receive copies of the environmental documents, and will be notified of meetings associated with the Commission's environmental review process. Environmental commenter's will not be required to serve copies of filed documents on all other parties. However, the non-party commentary, will not receive copies of all documents filed by other parties or issued by the Commission (except for the mailing of environmental documents issued by the Commission) and will not have the right to seek court review of the Commission's final order.

The Commission strongly encourages electronic filings of comments, protests, and interventions via the internet in lieu of paper. See 18 CFR 385.2001(a)(1)(iii) and the instructions on the Commission's Web site (*www.ferc.gov*) under the ''e-Filing'' link. Persons unable to file electronically should submit an original and 5 copies of the protest or intervention to the Federal Energy Regulatory Commission, 888 First Street NE., Washington, DC 20426.

Dated: July 3, 2014.

Kimberly D. Bose,

Secretary.

[FR Doc. 2014–16195 Filed 7–10–14; 8:45 am]

BILLING CODE 6717–01–P

ENVIRONMENTAL PROTECTION AGENCY

[FRL–9913–39–OGC]

Proposed Consent Decree, Clean Air Act Citizen Suit

AGENCY: Environmental Protection Agency (EPA).

ACTION: Notice of Proposed Consent Decree; Request for Public Comment.

SUMMARY: In accordance with section 113(g) of the Clean Air Act, as amended (''CAA'' or the ''Act''), notice is hereby given of a proposed consent decree to address a lawsuit filed by the National Parks Conservation Association, et al., (''Plaintiffs') in the United States District Court for the District of Minnesota: *National Parks Conservation Association* v. *McCarthy,* Civil Action No. 12–3043 (RHK/JSM) (D. Minn.). On December 5, 2012, Plaintiffs filed a complaint alleging that Gina McCarthy, in her official capacity as Administrator of the United States Environmental Protection Agency (''EPA''), failed to perform a mandatory duty to respond to a 2009 certification by the Department of the Interior (''DOI'') that visibility impairment in Minnesota's Voyageurs National Park and Michigan's Isle Royale National Park is reasonably attributable to emissions from Xcel Energy's coal-fired Sherburne County Generating Station (''Sherco'') in Minnesota. The proposed consent decree would establish deadlines for EPA to take such action.

DATES: Written comments on the proposed consent decree must be received by *August 11, 2014.*

ADDRESSES: Submit your comments, identified by Docket ID number EPA–HQ–OGC–2014–0508 online at *www.regulations.gov* (EPA's preferred method); by email to *oei.docket@epa.gov;* by mail to EPA Docket Center, Environmental Protection Agency, Mailcode: 2822T, 1200 Pennsylvania Ave. NW., Washington, DC 20460–0001; or by hand delivery or courier to EPA Docket Center, EPA West, Room 3334, 1301 Constitution Ave. NW., Washington, DC, between 8:30 a.m. and 4:30 p.m. Monday through Friday, excluding legal holidays. Comments on

a disk or CD–ROM should be formatted in Word or ASCII file, avoiding the use of special characters and any form of encryption, and may be mailed to the mailing address above.

FOR FURTHER INFORMATION CONTACT: Matthew C. Marks, Air and Radiation Law Office (2344A), Office of General Counsel, U.S. Environmental Protection Agency, 1200 Pennsylvania Ave., NW., Washington, DC 20460; telephone: (202) 564–3276; fax number: (202) 564–5603; email address: *marks.matthew@epa.gov*.

SUPPLEMENTARY INFORMATION:

I. Additional Information About the Proposed Consent Decree

The proposed consent decree would address a lawsuit filed by Plaintiffs alleging that EPA failed to perform a mandatory duty pursuant to 40 CFR 51.302(c)(4)(iii) and (iv) to promulgate a federal reasonably attributable visibility impairment best available retrofit technology (''RAVI BART'') determination for the Sherco power plant in Minnesota in response to the DOI's October 21, 2009 certification. In response to the lawsuit, EPA filed an answer on February 1, 2013, denying that the Administrator has a mandatory duty to promulgate RAVI BART for Sherco because EPA has not yet determined that visibility impairment at one or more Class I areas is reasonably attributable to emissions from Sherco. The proposed consent decree would require EPA to sign a proposed rule by February 27, 2015, and a final rule by August 31, 2015, in which EPA determines under 40 CFR 51.302(c)(4)(i) whether visibility impairment in Voyageurs National Park or Isle Royale National Park is reasonably attributable to Sherco. If EPA determines that visibility impairment in Voyageurs National Park or Isle Royale National Park is reasonably attributable to Sherco, then EPA's final rulemaking shall also include EPA's final determination of BART for Sherco. However, if EPA determines that visibility impairment in neither Voyageurs National Park nor Isle Royale National Park is reasonably attributable to Sherco, then BART for Sherco will not be required. In addition, the proposed consent decree states that if EPA signs a proposed rule by February 27, 2015, and a final rule by August 31, 2015, in which EPA either approves a State Implementation Plan (''SIP'') or promulgates a Federal Implementation Plan (''FIP'') under 40 CFR 51.308 that includes a final determination of BART for Sherco, then EPA's obligation is fulfilled. The proposed consent decree also resolves any claim the Plaintiffs have for the costs of litigation, including attorney fees.

For a period of thirty (30) days following the date of publication of this notice, the Agency will accept written comments relating to the proposed consent decree from persons who are not named as parties or interveners to the litigation in question. EPA or the Department of Justice may withdraw or withhold consent to the proposed consent decree if the comments disclose facts or considerations that indicate that such consent is inappropriate, improper, inadequate, or inconsistent with the requirements of the Act. Unless EPA or the Department of Justice determines that consent to this consent decree should be withdrawn, the terms of the consent decree will be affirmed.

II. Additional Information about Commenting on the Proposed Consent Decree

A. How can I get a copy of the consent decree?

The official public docket for this action (identified by Docket ID No. EPA–HQ–OGC–2014–0508 contains a copy of the proposed consent decree. The official public docket is available for public viewing at the Office of Environmental Information (OEI) Docket in the EPA Docket Center, EPA West, Room 3334, 1301 Constitution Ave. NW., Washington, DC. The EPA Docket Center Public Reading Room is open from 8:30 a.m. to 4:30 p.m., Monday through Friday, excluding legal holidays. The telephone number for the Public Reading Room is (202) 566–1744, and the telephone number for the OEI Docket is (202) 566–1752.

An electronic version of the public docket is available through *www.regulations.gov*. You may use *www.regulations.gov* to submit or view public comments, access the index listing of the contents of the official public docket, and access those documents in the public docket that are available electronically. Once in the system, key in the appropriate docket identification number then select ''search''.

It is important to note that EPA's policy is that public comments, whether submitted electronically or in paper, will be made available for public viewing online at *www.regulations.gov* without change, unless the comment contains copyrighted material, CBI, or other information whose disclosure is restricted by statute. Information claimed as CBI and other information whose disclosure is restricted by statute is not included in the official public docket or in the electronic public docket. EPA's policy is that copyrighted material, including copyrighted material contained in a public comment, will not be placed in EPA's electronic public docket but will be available only in printed, paper form in the official public docket. Although not all docket materials may be available electronically, you may still access any of the publicly available docket materials through the EPA Docket Center.

B. How and to whom do I submit comments?

You may submit comments as provided in the **ADDRESSES** section. Please ensure that your comments are submitted within the specified comment period. Comments received after the close of the comment period will be marked ''late.'' EPA is not required to consider these late comments.

If you submit an electronic comment, EPA recommends that you include your name, mailing address, and an email address or other contact information in the body of your comment and with any disk or CD–ROM you submit. This ensures that you can be identified as the submitter of the comment and allows EPA to contact you in case EPA cannot read your comment due to technical difficulties or needs further information on the substance of your comment. Any identifying or contact information provided in the body of a comment will be included as part of the comment that is placed in the official public docket, and made available in EPA's electronic public docket. If EPA cannot read your comment due to technical difficulties and cannot contact you for clarification, EPA may not be able to consider your comment.

Use of the *www.regulations.gov* Web site to submit comments to EPA electronically is EPA's preferred method for receiving comments. The electronic public docket system is an ''anonymous access'' system, which means EPA will not know your identity, email address, or other contact information unless you provide it in the body of your comment. In contrast to EPA's electronic public docket, EPA's electronic mail (email) system is not an ''anonymous access'' system. If you send an email comment directly to the Docket without going through *www.regulations.gov,* your email address is automatically captured and included as part of the comment that is placed in the official public docket, and made available in EPA's electronic public docket.

Dated: June 27, 2014.

Lorie J. Schmidt,

Associate General Counsel.

[FR Doc. 2014–16306 Filed 7–10–14; 8:45 am]

BILLING CODE 6560–50–P

ENVIRONMENTAL PROTECTION AGENCY

[ER–FRL–9015–8]

Environmental Impact Statements; Notice of Availability

Responsible Agency: Office of Federal Activities, General Information (202) 564–7146 or *http://www.epa.gov/compliance/nepa/.*

Weekly receipt of Environmental Impact Statements

Filed 06/30/2014 through 07/03/2014

Pursuant to 40 CFR 1506.9.

Notice

Section 309(a) of the Clean Air Act requires that EPA make public its comments on EISs issued by other Federal agencies. EPA's comment letters on EISs are available at: *http://www.epa.gov/compliance/nepa/eisdata.html.*

EIS No. 20140186, Final EIS, USFS, NM, Valles Caldera National Preserve—Landscape Restoration and Stewardship Plan, *Review Period Ends:* 08/11/2014, *Contact:* Marie Rodriguez 505–661–3333.

EIS No. 20140187, Second Final Supplement, USACE, WA, Grays Harbor Navigation Improvement Project, *Review Period Ends:* 08/11/2014, *Contact:* Leah Wickstrom 206–764–3652.

EIS No. 20140188, Final EIS, NPS, FL, Canaveral National Seashore Final General Management Plan, *Review Period Ends:* 08/11/2014, *Contact:* Chris Church 303–969–2276.

EIS No. 20140189, Draft EIS, USFS, CO, Middle Bald Mountain Area Communication Site, *Comment Period Ends:* 08/25/2014, *Contact:* Carol Kruse 970–295–6663.

EIS No. 20140190, Revised Draft EIS, USFS, 00, Greater Sage Grouse Bi-State Distinct Population Segment Forest Plan Amendment, *Comment Period Ends:* 10/09/2014, *Contact:* James Winfrey 775–355–5308.

Dated: July 8, 2014.

Dawn Roberts,

Management Analyst, NEPA Compliance Division, Office of Federal Activities.

[FR Doc. 2014–16245 Filed 7–10–14; 8:45 am]

BILLING CODE 6560–50–P

ENVIRONMENTAL PROTECTION AGENCY

[FRL–9913–44–OA]

Notification of Two Public Teleconferences of the Science Advisory Board Panel for the Review of the EPA Water Body Connectivity Report

AGENCY: Environmental Protection Agency (EPA).

ACTION: Notice.

SUMMARY: The EPA Science Advisory Board (SAB) Staff Office announces two public teleconferences of the SAB Panel to provide comments to the chartered SAB on the adequacy of the scientific and technical basis of the proposed rule titled *Definition of Waters of the United States under the Clean Water Act.*

DATES: The SAB Panel for the Review of the EPA Water Body Connectivity Report will conduct public teleconferences on August 20, 2014 and August 21, 2014. Each of the teleconferences will begin at 1:00 p.m. and end at 5:00 p.m. (Eastern Time).

Location: The public teleconferences will be conducted by telephone only.

FOR FURTHER INFORMATION CONTACT: Any member of the public wishing to obtain information concerning the public teleconferences may contact Dr. Thomas Armitage, Designated Federal Officer (DFO), EPA Science Advisory Board Staff Office (1400R), U.S. Environmental Protection Agency, 1200 Pennsylvania Avenue NW., Washington, DC 20460; via telephone at (202) 564–2155 or via email at *armitage.thomas@epa.gov.* General information concerning the SAB as well as any updates concerning the teleconferences announced in this notice may be found on the EPA Web site at *http://www.epa.gov/sab.*

SUPPLEMENTARY INFORMATION: The SAB was established pursuant to the Environmental Research, Development, and Demonstration Authorization Act (ERDDAA), codified at 42 U.S.C. 4365, to provide independent scientific and technical advice to the Administrator on the technical basis for Agency positions and regulations. The SAB is a Federal Advisory Committee chartered under the Federal Advisory Committee Act (FACA), 5 U.S.C., App. 2. The SAB will comply with the provisions of FACA and all appropriate SAB Staff Office procedural policies. Pursuant to FACA and EPA policy, notice is hereby given that the SAB Panel for the Review of the EPA Water Body Connectivity Report will hold two public teleconferences to provide comments to the chartered SAB on adequacy of the scientific and technical basis of the proposed rule titled *Definition of Waters of the United States under the Clean Water Act.* This proposed rule was published by the EPA and the U.S. Army Corps of Engineers on April 21, 2014 (79 FR 22188).

Background: The SAB Panel for the Review of the EPA Water Body Connectivity Report was established to conduct a peer review of the EPA draft report titled *Connectivity of Streams and Wetlands to Downstream Waters: A Review and Synthesis of the Scientific Evidence* (September, 2013 External Review Draft, EPA/600/R–11/098B). The report was written to inform development of a rule proposed by the EPA and the U.S. Army Corps of Engineers to clarify the definition of waters of the United States under the Clean Water Act (79 FR 22188). The Panel was charged with reviewing the overall clarity and technical accuracy of the EPA draft report, whether it included and correctly summarized the most relevant peer-reviewed scientific literature, and whether the findings and conclusions were supported by the available science. To conduct the peer review, the Panel held a face-to-face meeting on December 16–18, 2013 [**Federal Register** Notice dated September 24, 2013 (78 FR 58536)], public teleconferences on April 28 and May 2, 2014 [**Federal Register** Notice dated April 1, 2014 (79 FR 18293)], and a public teleconference on June 19, 2014 [**Federal Register** Notice dated May 23, 2014 (79 FR 29760)]. Information about this activity may be found at *http://yosemite.epa.gov/sab/sabproduct.nsf/fedrgstr_activites/Watershed%20Connectivity%20Report?OpenDocument.*

The ERDDAA requires the EPA to make available to the SAB proposed criteria documents, standards, limitations, or regulations provided to any other federal agency for formal review and comment together with the relevant scientific and technical information on which the proposed action is based. The SAB may then make available to the Administrator its advice and comments on the adequacy of the scientific and technical basis of the proposed actions. The purpose of the upcoming teleconferences is for the SAB Panel to develop comments to the chartered SAB on the adequacy of the scientific and technical basis of the proposed rule cited above. Comments from the Panel will inform a letter to the EPA Administrator, to be prepared by the chartered SAB, on the adequacy of the scientific and technical basis of the proposed rule titled *Definition of Waters of the United States under the Clean*

Water Act. The two Panel teleconferences will be conducted as one complete meeting, beginning on August 20, 2014 and continuing on August 21, 2014. Information about this advisory activity may be found at *http://yosemite.epa.gov/sab/sabproduct.nsf/fedrgstr_activites/WOUS-adv%26com?OpenDocument.*

Availability of Meeting Materials: Teleconference agendas and any other meeting materials will be placed on the SAB Web site at *http://www.epa.gov/sab* in advance of the teleconferences. The proposed rule titled *Definition of Waters of the United States under the Clean Water Act* is available on the EPA Web site at *http://www2.epa.gov/sites/production/files/2014–04/documents/fr-2014–07142.pdf.* For questions and information concerning the proposed rule please contact Ms. Donna Downing, Office of Water (4502–T), Environmental Protection Agency, 1200 Pennsylvania Avenue NW., Washington, DC 20460; telephone (202) 566–2428 or via email at *CWAwaters@epa.gov.*

Procedures for Providing Public Input: Public comment for consideration by EPA's federal advisory committees and panels has a different purpose from public comment provided to EPA program offices. Therefore, the process for submitting comments to a federal advisory committee is different from the process used to submit comments to an EPA program office.

Federal advisory committees and panels, including scientific advisory committees, provide independent advice to EPA. Members of the public can submit comments for a federal advisory committee to consider as it develops advice for EPA. Input from the public to the SAB will have the most impact if it provides specific scientific or technical information or analysis for SAB panels to consider or if it relates to the clarity or accuracy of the technical information. Members of the public wishing to provide oral statements to the SAB Panel should contact the DFO directly. *Oral Statements:* In general, individuals or groups requesting an oral presentation at a public teleconference will be limited to three minutes. Interested parties should contact Dr. Thomas Armitage, DFO, in writing (preferably via email) at the contact information noted above by August 13, 2014 to be placed on the list of public speakers for August 20, 2014. *Written Statements:* Members of the public wishing to provide written comments may submit them to the EPA Docket electronically via *www.regulations.gov* by email, by mail, or by hand delivery/courier. Please follow the detailed instructions provided in the written statements section of this notice. Written statements should be received in the EPA Docket by August 13, 2014 so that the information may be made available to the SAB Panel for its consideration. Written statements should be identified by Docket ID No. EPA–HQ–OA–2014–0010 and submitted to the Docket at *www.regulations.gov* by one of the following methods:

- *www.regulations.gov:* Follow the on-line instructions for submitting comments.
- Email: *Docket_OEI@epa.gov:* Include the docket number in the subject line of the message.
- Mail: Office of Environmental Information (OEI) Docket (Mail Code: 28221T), Docket ID No. EPA–HQ–OA–2014–0010, U.S. Environmental Protection Agency, 1200 Pennsylvania Ave. NW., Washington, DC 20460. The phone number is (202) 566–1752.
- Hand Delivery: The OEI Docket is located in the EPA headquarters Docket Center, Room 3334, EPA West Building, 1301 Constitution Ave. NW., Washington, DC. The EPA Docket Center Public Reading Room is open from 8:30 a.m. to 4:30 p.m., Monday through Friday, excluding legal holidays. The telephone number for the Public Reading Room is (202) 566–1744. Deliveries are only accepted during the docket's normal hours of operation, and special arrangements should be made for deliveries of boxed information.

Direct your comments to Docket ID No. EPA–HQ–OA–2014–0010. Please ensure that your comments are submitted by August 13, 2014. Comments received after that date will be marked late and may not be provided to the SAB Panel for consideration before the August 20, 2014 teleconference. It is EPA's policy to include all comments received in the public docket without change and to make the comments available on-line at *www.regulations.gov,* including any personal information provided, unless a comment includes information claimed to be Confidential Business Information (CBI) or other information whose disclosure is restricted by statute. Do not submit information that you consider to be CBI or otherwise protected through www.regulations.gov or email. The *www.regulations.gov* Web site is an ''anonymous access'' system, which means EPA will not know your identity or contact information unless you provide it in the body of your comment. If you send an email directly to EPA without going through *www.regulations.gov,* your email address will be automatically captured and included as part of the comment that is placed in the public docket and made available on the Internet. If you submit an electronic comment, EPA recommends that you include your name and other contact information in the body of your comment and with any disk or CD–ROM you submit. If EPA cannot read your comments due to technical difficulties and cannot contact you for clarification, the SAB Panel may not be able to consider your comments. Electronic files should avoid the use of special characters and any form of encryption and be free of any defects or viruses. For additional information about EPA's public docket, visit the EPA Docket Center homepage at *www.epa.gov/epahome/dockets.htm.*

Documents in the docket are listed in the *www.regulations.gov* index. Although listed in the index, some information is not publicly available, e.g., CBI or other information whose disclosure is restricted by statute. Certain other material, such as copyrighted material will be publicly available only in hard copy. Publicly available docket materials are available either electronically at *www.regulations.gov* or in hard copy at the OEI Docket in the EPA Headquarters Docket Center.

Accessibility: For information on access or services for individuals with disabilities, please contact Dr. Thomas Armitage at (202) 564–2155 or *armitage.thomas@epa.gov.* To request accommodation of a disability, please contact Dr. Armitage preferably at least ten days prior to the teleconference to give EPA as much time as possible to process your request.

Dated: June 30, 2014.

Thomas H. Brennan,

Deputy Director, EPA Science Advisory Staff Office.

[FR Doc. 2014–16308 Filed 7–10–14; 8:45 am]

BILLING CODE 6560–50–P

ENVIRONMENTAL PROTECTION AGENCY

[FRL–9913–43–OA]

Notification of a Public Meeting of the Science Advisory Board Advisory Panel on EPA's Report on the Environment 2014

AGENCY: Environmental Protection Agency (EPA).

ACTION: Notice.

SUMMARY: The Environmental Protection Agency (EPA) Science Advisory Board (SAB) Staff Office announces a public meeting of the SAB Advisory Panel on EPA's Report on the Environment (ROE) 2014.

DATES: The SAB Advisory Panel on EPA's Report on the Environment 2014 public meeting will be held on Wednesday, July 30, 2014, from 9:00 a.m. to 5:00 p.m. Eastern Time and Thursday, July 31, 2014, from 8:30 a.m. to 4:00 p.m. Eastern Time.

ADDRESSES: The public meeting will be held at the J.W. Marriott, 1331 Pennsylvania Avenue NW., Washington, DC 20004.

FOR FURTHER INFORMATION CONTACT: Any member of the public who wishes further information concerning the public meeting may contact Ms. Stephanie Sanzone, Designated Federal Officer (DFO), via telephone at (202) 564–2067 or email at *sanzone.stephanie@epa.gov*. General information concerning the SAB can be found on the EPA Web site at *http://www.epa.gov/sab*.

SUPPLEMENTARY INFORMATION:

Background

The SAB was established pursuant to the Environmental Research, Development, and Demonstration Authorization Act (ERDDAA), codified at 42 U.S.C. 4365, to provide independent scientific and technical advice to the Administrator on the technical basis for agency positions and regulations. The SAB is a federal advisory committee chartered under the Federal Advisory Committee Act (FACA), 5 U.S.C., App. 2. The SAB and its panels will comply with the provisions of FACA and all appropriate SAB Staff Office procedural policies. Pursuant to FACA and EPA policy, notice is hereby given that the SAB Advisory Panel on EPA's Report on the Environment 2014 will hold a public meeting to discuss the Agency's draft Report on the Environment (ROE) 2014. This SAB panel will provide advice to the Administrator through the chartered SAB.

EPA's ROE compiles and maintains indicators on the status and trends for environmental and human health conditions related to the mission of the agency. The indicators are focused on informing questions of interest to the EPA and its mission of protecting the environment and human health. The EPA's first ROE was released in draft in 2003 with the corresponding final report released in 2008 in hard copy and online format. The SAB provided advice on two draft versions leading up to the 2008 ROE; the findings and recommendations of those SAB reviews are available on the SAB Web site at *www.epa.gov/sab* (see reports EPA–SAB–05–004 and EPA–SAB–08–007). In 2009, SAB members provided additional input to inform the continued development of future versions of the ROE (see report EPA–SAB–09–017). In response to suggestions from the SAB and additional comments from users of the ROE, the EPA developed the draft ROE 2014 as an entirely web-based product.

The EPA's Office of Research and Development has requested that the SAB review and comment on the recently released draft of the ROE Web site (*http://www.epa.gov/draftroe*) with particular attention to the new features added since the release of the 2008 report. Specifically, the Agency has requested the SAB to comment on the clarity of the ROE objectives for various audiences, the overarching conceptual framework based on a sustainability theme, the addition of statistical information for individual indicators, and the presentation of the ROE 2014 features in an online format.

The EPA made the draft ROE 2014 Web site available for public comment through April 27, 2014 (see *https://www.federalregister.gov/articles/2014/03/27/2014–06824/draft-revised-epas-report-on-the-environment-2014*). Public comments received by the agency will be provided to the SAB panel.

The purpose of the July 30–31, 2014, meeting is for the SAB Panel to be briefed on the ROE 2014 and to develop draft responses to a set of EPA charge questions. Additional information about this advisory activity, including the process for forming the SAB panel, can be found at the following URL: *http://yosemite.epa.gov/sab/sabproduct.nsf/fedrgstr_activites/ROE%202014?OpenDocument*.

Technical Contacts

Any technical questions concerning EPA's draft ROE 2014 should be directed to Dr. Jeffrey Frithsen at (703) 347–8623 or by email at *frithsen.jeffrey@epa.gov*.

Availability of Meeting Materials

The external review draft of the ROE 2014 is available at *http://www.epa.gov/draftroe*. Additional information, including the meeting agenda, the EPA charge and other materials provided to the panel, will be accessible prior to the meeting through the calendar link on the blue navigation bar at *http://www.epa.gov/sab/*.

Procedures for Providing Public Input

Public comment for consideration by EPA's federal advisory committees and panels has a different purpose from public comment provided to EPA program offices. Therefore, the process for submitting comments to a federal advisory committee is different from the process used to submit comments to an EPA program office. Federal advisory committees and panels, including scientific advisory committees, provide independent advice to the EPA. Interested members of the public may submit relevant written or oral information on the topic of this advisory activity (including the review materials and the charge), and/or the group conducting the activity, for the SAB to consider during the advisory process. Input from the public to the SAB will have the most impact if it provides specific scientific or technical information or analysis for SAB committees to consider or if it relates to the clarity or accuracy of the technical information. Members of the public wishing to provide comment should contact the DFO directly. *Oral Statements:* In general, individuals or groups requesting an oral presentation at a public meeting will be limited to five minutes. Interested parties should contact Ms. Stephanie Sanzone, DFO, in writing (preferably via email) at the contact information noted above by July 23, 2014, to be placed on the list of public speakers for the meeting.

Written Statements: Written statements should be supplied to the DFO via email at the contact information noted above by July 23, 2014, so that the information may be made available to the panel members for their consideration prior to the meeting. Written statements should be supplied in one of the following electronic formats: Adobe Acrobat PDF, MS Word, MS PowerPoint, or Rich Text files in IBM–PC/Windows 98/2000/XP format. It is the SAB Staff Office general policy to post written comments on the Web page for the advisory meeting or teleconference. Submitters are requested to provide an unsigned version of each document because the SAB Staff Office does not publish documents with signatures on its Web sites. Members of the public should be aware that their personal contact information, if included in any written comments, may be posted to the SAB Web site. Copyrighted material will not be posted without explicit permission of the copyright holder.

Accessibility

For information on access or services for individuals with disabilities, please contact Ms. Stephanie Sanzone at (202) 564–2067 or *sanzone.stephanie@epa.gov*. To request accommodation of a disability, please contact Ms. Sanzone preferably at least ten days prior to the meeting to give EPA as much time as possible to process your request.

Dated: June 25, 2014.

Christopher Zarba,

Director, EPA Science Advisory Board Staff Office.

[FR Doc. 2014–16269 Filed 7–10–14; 8:45 am]

BILLING CODE 6560–50–P

ENVIRONMENTAL PROTECTION AGENCY

[EPA–R04–OW–2014–0453; FRL 9913–57–OW]

Public Water System Supervision Program Revision for the State of Mississippi

AGENCY: U.S. Environmental Protection Agency (EPA).

ACTION: Notice of tentative approval.

SUMMARY: Notice is hereby given that the State of Mississippi is revising its approved Public Water System Supervision Program. Mississippi has adopted the following rules: Long Term 1 Enhanced Surface Water Treatment Rule, Long Term 2 Enhanced Surface Water Treatment Rule, Stage 2 Disinfectants and Disinfection Byproducts Rule, Lead and Copper Rule Short-Term Regulatory Revisions and Clarifications, and Ground Water Rule. The EPA has determined that Mississippi's rules are no less stringent than the corresponding Federal regulations. Therefore, the EPA is tentatively approving this revision to the State of Mississippi's Public Water System Supervision Program.

DATES: Any interested person may request a public hearing. A request for a public hearing must be submitted by August 11, 2014, to the Regional Administrator at the EPA Region 4 address shown below. The Regional Administrator may deny frivolous or insubstantial requests for a hearing. However, if a substantial request for a public hearing is made by August 11, 2014, a public hearing will be held. If no timely and appropriate request for a hearing is received and the Regional Administrator does not elect to hold a hearing on her own motion, this tentative approval shall become final and effective on August 11, 2014. Any request for a public hearing shall include the following information: The name, address and telephone number of the individual, organization or other entity requesting a hearing; a brief statement of the requesting person's interest in the Regional Administrator's determination and a brief statement of the information that the requesting person intends to submit at such hearing; and the signature of the individual making the request or, if the request is made on behalf of an organization or other entity, the signature of a responsible official of the organization or other entity.

ADDRESSES: All documents relating to this determination are available for inspection between the hours of 8:30 a.m. and 4:30 p.m., Monday through Friday, at the following offices: Mississippi State Department of Health, Bureau of Public Water Supply, 570 East Woodrow Wilson Drive, Jackson, Mississippi 39216; and the U.S. Environmental Protection Agency Region 4, Safe Drinking Water Branch, 61 Forsyth Street SW., Atlanta, Georgia 30303.

FOR FURTHER INFORMATION CONTACT: Dale Froneberger, EPA Region 4, Safe Drinking Water Branch, by mail at the Atlanta address given above, by telephone at (404) 562–9446, or by email at *froneberger.dale@epa.gov.*

EPA Analysis: On August 29, 2012, the State of Mississippi submitted a request that the Region approve a revision to the State's Safe Drinking Water Act Public Water System Supervision Program to include the authority to implement and enforce the Long Term 1 Enhanced Surface Water Treatment Rule, the Long Term 2 Enhanced Surface Water Treatment Rule, the Stage 2 Disinfectants and Disinfection Byproducts Rule, and the Lead and Copper Rule Short-Term Regulatory Revisions and Clarifications. On November 6, 2012, the State of Mississippi submitted a request that the Region approve a revision to the State's Safe Drinking Water Act Public Water System Supervision Program to include the authority to implement and enforce the Ground Water Rule. For the requests to be approved, the EPA must find the State Rules codified at 15 Miss. Admin. Code Pt. 20, Subpt. 72, Ch. 1., to be no less stringent than the Federal Rules codified at 40 CFR Part 141, Subpart T—Enhanced Filtration and Disinfection—Systems Serving Fewer Than 10,000 People; 40 CFR part 141, Subpart W—Enhanced Treatment for *Cryptosporidium;* 40 CFR part 141, Subpart L—Disinfectant Residuals, Disinfection Byproducts, and Disinfection Byproduct Precursors; 40 CFR Part 141, Subpart U—Initial Distribution System Evaluations; 40 CFR part 141, Subpart V—Stage 2 Disinfection Byproducts Requirements; 40 CFR part 141, Subpart I—Control of Lead and Copper; and 40 CFR Part 141, Subpart S—Ground Water Rule. The EPA reviewed the applications using the Federal statutory provisions (Section 1413 of the Safe Drinking Water Act), Federal regulations (at 40 CFR part 142), State regulations, rule crosswalks, and EPA regulatory guidance to determine whether the requests for revision are approvable. The EPA determined that the Mississippi regulations are no less stringent than the corresponding Federal regulations.

EPA Action: The EPA is tentatively approving this revision. If the EPA does not receive a timely and appropriate request for a hearing and the Regional Administrator does not elect to hold a hearing on her own motion, this tentative approval will become final and effective on August 11, 2014.

Authority: Section 1413 of the Safe Drinking Water Act, as amended (1996), and 40 CFR Part 142.

Dated: June 16, 2014.

Heather McTeer Toney,

Regional Administrator, Region 4.

[FR Doc. 2014–16259 Filed 7–10–14; 8:45 am]

BILLING CODE 6560–50–P

EXPORT-IMPORT BANK

[Public Notice 2014–0035]

Application for Final Commitment for a Long-Term Loan or Financial Guarantee in Excess of $100 Million: AP088819XX

AGENCY: Export-Import Bank of the United States.

ACTION: Notice.

SUMMARY: This Notice is to inform the public, in accordance with Section 3(c)(10) of the Charter of the Export-Import Bank of the United States (''Ex-Im Bank''), that Ex-Im Bank has received an application for final commitment for a long-term loan or financial guarantee in excess of $100 million (as calculated in accordance with Section 3(c)(10) of the Charter). Comments received within the comment period specified below will be presented to the Ex-Im Bank Board of Directors prior to final action on this Transaction.

DATES: Comments must be received on or before August 5, 2014 to be assured of consideration before final consideration of the transaction by the Board of Directors of Ex-Im Bank.

ADDRESSES: Comments may be submitted through Regulations.gov at *WWW.REGULATIONS.GOV*. To submit a comment, enter EIB–2014–0035 under the heading ''Enter Keyword or ID'' and select Search. Follow the instructions provided at the Submit a Comment screen. Please include your name, company name (if any) and EIB–2014–0035 on any attached document.

Reference: AP088819XX.

Purpose and Use:

Brief description of the purpose of the transaction:

To support the export of U.S.-manufactured aircraft and engines.

Brief non-proprietary description of the anticipated use of the items being exported:

To provide commercial passenger air transportation services globally.

To the extent that Ex-Im Bank is reasonably aware, the item(s) being exported are not expected to produce exports or provide services in competition with the exportation of goods or provision of services by a United States industry.

Parties: Principal Supplier: The Boeing Company and General Electric; Obligor: ICBC Financial Leasing Co., Ltd.; Guarantor(s): ICBC International Leasing Co., Ltd.

Description of Items Being Exported: Boeing 787 aircraft.

Information on Decision: Information on the final decision for this transaction will be available in the ''Summary Minutes of Meetings of Board of Directors'' on *http://exim.gov/newsandevents/boardmeetings/board/.*

Confidential Information: Please note that this notice does not include confidential or proprietary business information; information which, if disclosed, would violate the Trade Secrets Act; or information which would jeopardize jobs in the United States by supplying information that competitors could use to compete with companies in the United States.

Alla Lake,

Ex-Im Bank Records Officer, (Contractor).

[FR Doc. 2014–16230 Filed 7–10–14; 8:45 am]

BILLING CODE 6690–01–P

FEDERAL RESERVE SYSTEM

Change in Bank Control Notices; Acquisitions of Shares of a Bank or Bank Holding Company

The notificants listed below have applied under the Change in Bank Control Act (12 U.S.C. 1817(j)) and § 225.41 of the Board's Regulation Y (12 CFR 225.41) to acquire shares of a bank or bank holding company. The factors that are considered in acting on the notices are set forth in paragraph 7 of the Act (12 U.S.C. 1817(j)(7)).

The notices are available for immediate inspection at the Federal Reserve Bank indicated. The notices also will be available for inspection at the offices of the Board of Governors. Interested persons may express their views in writing to the Reserve Bank indicated for that notice or to the offices of the Board of Governors. Comments must be received not later than July 28, 2014.

A. Federal Reserve Bank of Chicago (Colette A. Fried, Assistant Vice President) 230 South LaSalle Street, Chicago, Illinois 60690–1414:

1. *Michael O. and Sheila F. Cloonen, both of Palmer, Texas, as co-trustees of the Michael O. Cloonen and Sheila F. Cloonen Revocable Trust, and Larry R. Tarman and Susan M. Tarman,* both of Morris, Illinois; as a group to acquire voting shares of First Mazon Bancorp, Inc., and thereby indirectly acquire voting shares of Mazon State Bank, both in Mazon, Illinois.

Board of Governors of the Federal Reserve System, July 8, 2014.

Michael J. Lewandowski,

Associate Secretary of the Board.

[FR Doc. 2014–16247 Filed 7–10–14; 8:45 am]

BILLING CODE 6210–01–P

FEDERAL RESERVE SYSTEM

Formations of, Acquisitions by, and Mergers of Bank Holding Companies

The companies listed in this notice have applied to the Board for approval, pursuant to the Bank Holding Company Act of 1956 (12 U.S.C. 1841 *et seq.*) (BHC Act), Regulation Y (12 CFR part 225), and all other applicable statutes and regulations to become a bank holding company and/or to acquire the assets or the ownership of, control of, or the power to vote shares of a bank or bank holding company and all of the banks and nonbanking companies owned by the bank holding company, including the companies listed below.

The applications listed below, as well as other related filings required by the Board, are available for immediate inspection at the Federal Reserve Bank indicated. The applications will also be available for inspection at the offices of the Board of Governors. Interested persons may express their views in writing on the standards enumerated in the BHC Act (12 U.S.C. 1842(c)). If the proposal also involves the acquisition of a nonbanking company, the review also includes whether the acquisition of the nonbanking company complies with the standards in section 4 of the BHC Act (12 U.S.C. 1843). Unless otherwise noted, nonbanking activities will be conducted throughout the United States.

Unless otherwise noted, comments regarding each of these applications must be received at the Reserve Bank indicated or the offices of the Board of Governors not later than August 7, 2014.

A. Federal Reserve Bank of Minneapolis (Jacquelyn K. Brunmeier, Assistant Vice President) 90 Hennepin Avenue, Minneapolis, Minnesota 55480–0291:

1. *Wilcox Bancshares, Inc.,* Grand Rapids, Minnesota; to acquire 100 percent of the voting shares of Crow River State Bank, Delano, Minnesota.

Board of Governors of the Federal Reserve System, July 8, 2014.

Michael J. Lewandowski,

Associate Secretary of the Board.

[FR Doc. 2014–16248 Filed 7–10–14; 8:45 am]

BILLING CODE 6210–01–P

DEPARTMENT OF HEALTH AND HUMAN SERVICES

Centers for Disease Control and Prevention

Board of Scientific Counselors, National Center for Injury Prevention and Control, (BSC, NCIPC)

In accordance with Section 10(a)(2) of the Federal Advisory Committee Act (Pub. L.92–463), the Centers for Disease Control and Prevention (CDC) announces, the following meeting of the aforementioned committee:

Time and Date: 9:00 a.m.–12:00 p.m., July 29, 2014 (Closed).

Place: Teleconference.

Status: The meeting as designated above will be closed to the public in accordance with provisions set forth in Section 552b(c)(4) and (6), Title 5 U.S.C., and the Determination of the Director, Management Analysis and Services Office, CDC pursuant to Public Law 92–463.

Purpose: The Board of Scientific Counselors makes recommendations regarding policies, strategies, objectives, and priorities; and reviews progress toward injury prevention goals and provides evidence in injury prevention-related research and programs. The Board also provides advice on the appropriate balance of intramural and extramural research, the structure, progress, and performance of intramural programs. The Board is designed to provide guidance on extramural scientific program matters, including the: (1) Review of extramural research concepts for funding opportunity announcements; (2) conduct of Secondary Peer Review of extramural research grants, cooperative agreements, and contracts applications received in response to the funding opportunity announcements as it relates to the Center's programmatic balance and mission; (3) submission of secondary review recommendations to the Center

Director of applications to be considered for funding support; (4) review of research portfolios, and (5) review of program proposals.

Matters for Discussion: The Board of Scientific Counselors, National Center for Injury Prevention and Control (BSC, NCIPC) will meet to conduct a Secondary Peer Review of extramural research grant applications received in response to five (5) Funding Opportunity Announcements (FOAs) ''Research to Prevent Prescription Drug Overdoses'', FOA CE14–002; ''Motor Vehicle Injury Prevention: Evaluation of Increased Nighttime Enforcement of Seatbelts Uses'', FOA CE14–003; ''Research on Integration of Injury Prevention in Health Systems'', FOA CE14–004; ''Evaluating Promising Strategies to Build the Evidence Base for Sexual Violence Prevention'', FOA CE14–005; and ''Research Grants for Preventing Violence and Violence-Related Injury'', FOA CE14–006. Applications will be assessed for applicability to the Center's mission and programmatic balance. Recommendations from the secondary review will be voted upon and the applications will be forwarded to the Acting Center Director for consideration for funding support.

Contact Person for More Information: Gwendolyn H. Cattledge, Ph.D., M.S.E.H., Deputy Associate Director for Science, NCIPC, CDC, 4770 Buford Highway NE., Mailstop F–63, Atlanta, GA 30341, Telephone (770) 488–1430.

The Director, Management Analysis and Services Office, has been delegated the authority to sign **Federal Register** notices pertaining to announcements of meetings and other committee management activities, for both the Centers for Disease Control and Prevention and the Agency for Toxic Substances and Disease Registry.

Elaine L. Baker,

Director, Management Analysis and Services Office, Centers for Disease Control and Prevention.

[FR Doc. 2014–16206 Filed 7–10–14; 8:45 am]

BILLING CODE 4163–18–P

DEPARTMENT OF HEALTH AND HUMAN SERVICES

Centers for Medicare & Medicaid Services

[Document Identifiers: CMS–10137, CMS–10237, CMS–10398 and CMS–10522]

Agency Information Collection Activities: Proposed Collection; Comment Request

AGENCY: Centers for Medicare & Medicaid Services, Department of Health and Human Services (HHS).

ACTION: Notice.

SUMMARY: The Centers for Medicare & Medicaid Services (CMS) is announcing an opportunity for the public to comment on CMS' intention to collect information from the public. Under the Paperwork Reduction Act of 1995 (the PRA), federal agencies are required to publish notice in the **Federal Register** concerning each proposed collection of information (including each proposed extension or reinstatement of an existing collection of information) and to allow 60 days for public comment on the proposed action. Interested persons are invited to send comments regarding our burden estimates or any other aspect of this collection of information, including any of the following subjects: (1) The necessity and utility of the proposed information collection for the proper performance of the agency's functions; (2) the accuracy of the estimated burden; (3) ways to enhance the quality, utility, and clarity of the information to be collected; and (4) the use of automated collection techniques or other forms of information technology to minimize the information collection burden.

DATES: Comments must be received by September 9, 2014.

ADDRESSES: When commenting, please reference the document identifier or OMB control number (OCN). To be assured consideration, comments and recommendations must be submitted in any one of the following ways:

1. *Electronically.* You may send your comments electronically to *http://www.regulations.gov.* Follow the instructions for ''Comment or Submission'' or ''More Search Options'' to find the information collection document(s) that are accepting comments.

2. *By regular mail.* You may mail written comments to the following address: CMS, Office of Strategic Operations and Regulatory Affairs, Division of Regulations Development, Attention: Document Identifier/OMB Control Number _____, Room C4–26–05, 7500 Security Boulevard, Baltimore, Maryland 21244–1850.

To obtain copies of a supporting statement and any related forms for the proposed collection(s) summarized in this notice, you may make your request using one of following:

1. Access CMS' Web site address at *http://www.cms.hhs.gov/PaperworkReductionActof1995.*

2. Email your request, including your address, phone number, OMB number, and CMS document identifier, to *Paperwork@cms.hhs.gov.*

3. Call the Reports Clearance Office at (410) 786–1326.

FOR FURTHER INFORMATION CONTACT: Reports Clearance Office at (410) 786–1326.

SUPPLEMENTARY INFORMATION:

Contents

This notice sets out a summary of the use and burden associated with the following information collections. More detailed information can be found in each collection's supporting statement and associated materials (see **ADDRESSES**).

CMS–10137 Solicitation for Applications for Medicare Prescription Drug Plan 2015 Contracts

CMS–10237 Part C—Medicare Advantage and 1876 Cost Plan Expansion Application

CMS–10398 Generic Clearance for Medicaid and CHIP State Plan, Waiver, and Program Submissions

CMS–10522 Executive Summary Form for Research Identifiable Data

Under the Paperwork Reduction Act (PRA) (44 U.S.C. 3501–3520), federal agencies must obtain approval from the Office of Management and Budget (OMB) for each collection of information they conduct or sponsor. The term ''collection of information'' is defined in 44 U.S.C. 3502(3) and 5 CFR 1320.3(c) and includes agency requests or requirements that members of the public submit reports, keep records, or provide information to a third party. Section 3506(c)(2)(A) of the PRA requires federal agencies to publish a 60-day notice in the **Federal Register** concerning each proposed collection of information, including each proposed extension or reinstatement of an existing collection of information, before submitting the collection to OMB for approval. To comply with this requirement, CMS is publishing this notice.

Information Collection

1. *Type of Information Collection Request:* Revision of a currently approved collection; *Title of Information Collection:* Solicitation for Applications for Medicare Prescription Drug Plan 2015 Contracts; *Use:* The information will be collected under the solicitation of proposals from PDP, MA–PD, Cost Plan, PACE, and EGWP applicants. We will use the information to ensure that applicants meet our requirements and support the determination of contract awards. Participation in the Part D program is voluntary in nature. Only organizations that are interested in participating in the program will respond to the solicitation. The MA–PDs that voluntarily participate in the Part C program must submit a Part D application and successful bid. *Form Number:* CMS–10137 (OMB control number: 0938—0936); *Frequency:* Yearly; *Affected Public:* Private sector—Business or other for-profits and Not-for-profit institutions; *Number of Respondents:* 254; *Total Annual Responses:* 254; *Total Annual Hours:* 2,193. (For policy questions regarding this collection contact Arianne Spaccarelli at 410–786–5715).

2. *Type of Information Collection Request:* Revision of a currently approved collection; *Title of Information Collection:* Part C—Medicare Advantage and 1876 Cost Plan Expansion Application; *Use:* The information will be collected under the solicitation of Part C applications from MA, EGWP Plan, and Cost Plan applicants and will be used to ensure that applicants meet our requirements and support the determination of contract awards. Participation in all programs is voluntary in nature; only organizations that are interested in participating in the program will respond to the solicitation. The MA–PDs that voluntarily participate in the Part C program must submit a Part D application and successful bid. *Form Number:* CMS–10237 (OMB control number: 0938–0935); *Frequency:* Yearly; *Affected Public:* Private sector—Business or other for-profits and Not-for-profit institutions; *Number of Respondents:* 566; *Total Annual Responses:* 566; *Total Annual Hours:* 22,625. (For policy questions regarding this collection contact Melissa Staud at 410–786–3669).

3. *Type of Information Collection Request:* Revision of a currently approved collection; *Title of Information Collection:* Generic Clearance for Medicaid and CHIP State Plan, Waiver, and Program Submissions; *Use:* State Medicaid and CHIP agencies are responsible for developing submissions to CMS, including State plan amendments and requests for waivers and program demonstrations. States use templates when they are available and submit the forms to review for consistency with statutory and regulatory requirements (or in the case of waivers and demonstrations whether the proposal is likely to promote the objectives of the Medicaid program). If the requirements are met, we approve the States' submissions giving the States the authority to implement the flexibilities. For a State to receive Medicaid Title XIX funding, there must be an approved Title XIX State plan.

The development of streamlined submissions forms enhances the collaboration and partnership between States and CMS by documenting our policy for States to use as they are developing program changes. Streamlined forms improve efficiency of administration by creating a common and user-friendly understanding of the information we need to quickly process requests for State plan amendments, waivers, and demonstration, as well as ongoing reporting. *Form Number:* CMS–10398 (OMB control number: 0938–1148); *Frequency:* Collection specific, but generally the frequency is yearly, once, and occasionally; *Affected Public:* State, Local, or Tribal Governments; *Number of Respondents:* 56; *Total Annual Responses:* 1,120; *Total Annual Hours:* 28,747. (For policy questions regarding this collection contact Annette Pearson at 410–786–6858).

4. *Type of Information Collection Request:* New collection (Request for a new OMB control number); *Title of Information Collection:* Executive Summary Form for Research Identifiable Data; *Use:* The Centers for Medicare & Medicaid Services (CMS) is responsible for administering the Medicare, Medicaid and State Children's Health Insurance Programs. We collect data to support the Agency's mission and operations. These data include information about Medicare beneficiaries, Medicare claims, Medicare providers, and Medicaid eligibility and claims. We disclose the identifiable data consistent with the routine uses identified in the Privacy Act Systems of Records notices that are published in the **Federal Register** and the limitations on uses and disclosures that are set out in the HIPAA Privacy Rule.

All requests for identifiable data are received and reviewed by the Division of Privacy Operations & Compliance (DPOC) in the Office of E-Health Standards and Services. The DPOC staff and the CMS Privacy Officer review the requests to determine if there is legal authorization for disclosure of the data. If legal authorization exists, the request is reviewed to ensure that the minimal data necessary is requested and approved for the project. Requests for identifiable data for research purposes must be submitted to and approved by the CMS Privacy Board. To assist the CMS Privacy Board with its review of research data requests, OIPDA has developed the Executive Summary (ES) forms. The ES collects all the information that the CMS Privacy Board needs to review and make a determination on whether the request meets the requirements for release of identifiable data for research purposes. We currently have three versions of the ES Form and an ES Supplement for Requestors of the National Death Index (NDI) Causes of Death Variables. Each meets the need for a different type of requestor. *Form Number:* CMS–10522 (OMB control number: 0938–New); *Frequency:* On occasion; *Affected Public:* State, Local, or Tribal Governments; *Number of Respondents:* 325; *Total Annual Responses:* 325; *Total Annual Hours:* 650. (For policy questions regarding this collection contact Kim Elmo at 410–786–0161).

Dated: July 3, 2014.

Martique Jones,

Deputy Director, Regulations Development Group, Office of Strategic Operations and Regulatory Affairs.

[FR Doc. 2014–16076 Filed 7–10–14; 8:45 am]

BILLING CODE 4120–01–P

DEPARTMENT OF HEALTH AND HUMAN SERVICES

Centers for Medicare & Medicaid Services

[Document Identifiers: CMS–304/CMS–304a, CMS–368/CMS–R–144 and CMS–10517]

Agency Information Collection Activities: Submission for OMB Review; Comment Request

ACTION: Notice.

SUMMARY: The Centers for Medicare & Medicaid Services (CMS) is announcing an opportunity for the public to comment on CMS' intention to collect information from the public. Under the Paperwork Reduction Act of 1995 (PRA), federal agencies are required to publish notice in the **Federal Register** concerning each proposed collection of information, including each proposed extension or reinstatement of an existing collection of information, and to allow

a second opportunity for public comment on the notice. Interested persons are invited to send comments regarding the burden estimate or any other aspect of this collection of information, including any of the following subjects: (1) The necessity and utility of the proposed information collection for the proper performance of the agency's functions; (2) the accuracy of the estimated burden; (3) ways to enhance the quality, utility, and clarity of the information to be collected; and (4) the use of automated collection techniques or other forms of information technology to minimize the information collection burden.

DATES: Comments on the collection(s) of information must be received by the OMB desk officer by August 11, 2014.

ADDRESSES: When commenting on the proposed information collections, please reference the document identifier or OMB control number. To be assured consideration, comments and recommendations must be received by the OMB desk officer via one of the following transmissions:

OMB, Office of Information and Regulatory Affairs, Attention: CMS Desk Officer, Fax Number: (202) 395–5806 *OR,* Email: *OIRA_submission@omb.eop.gov.*

To obtain copies of a supporting statement and any related forms for the proposed collection(s) summarized in this notice, you may make your request using one of following:

1. Access CMS' Web site address at *http://www.cms.hhs.gov/PaperworkReductionActof1995.*
2. Email your request, including your address, phone number, OMB number, and CMS document identifier, to *Paperwork@cms.hhs.gov.*
3. Call the Reports Clearance Office at (410) 786–1326.

FOR FURTHER INFORMATION CONTACT: Reports Clearance Office at (410) 786–1326.

SUPPLEMENTARY INFORMATION: Under the Paperwork Reduction Act of 1995 (PRA) (44 U.S.C. 3501–3520), federal agencies must obtain approval from the Office of Management and Budget (OMB) for each collection of information they conduct or sponsor. The term ''collection of information'' is defined in 44 U.S.C. 3502(3) and 5 CFR 1320.3(c) and includes agency requests or requirements that members of the public submit reports, keep records, or provide information to a third party. Section 3506(c)(2)(A) of the PRA (44 U.S.C. 3506(c)(2)(A)) requires federal agencies to publish a 30-day notice in the **Federal Register** concerning each proposed collection of information, including each proposed extension or reinstatement of an existing collection of information, before submitting the collection to OMB for approval. To comply with this requirement, CMS is publishing this notice that summarizes the following proposed collection(s) of information for public comment:

1. *Type of Information Collection Request:* Extension of a currently approved collection; *Title of Information Collection:* Reconciliation of State Invoice and Prior Quarter Adjustment Statement; *Use:* Form CMS–304 (Reconciliation of State Invoice) is used by manufacturers to respond to the state's rebate invoice for current quarter utilization. Form CMS–304a (Prior Quarter Adjustment Statement) is required only in those instances where a change to the original rebate data submittal is necessary. *Form Number:* CMS–304 and –304a (OMB control number: 0938–0676); *Frequency:* Quarterly; *Affected Public:* Private sector—Business or other for-profits; *Number of Respondents:* 1,037; *Total Annual Responses:* 4,148; *Total Annual Hours:* 187,880. (For policy questions regarding this collection contact Andrea Wellington at 410–786–3490.)

2. *Type of Information Collection Request:* Extension of a currently approved collection; *Title of Information Collection:* Medicaid Drug Rebate Program Forms; *Use:* We develop the rebate amount per drug unit from information supplied by the drug manufacturers and distributes these data to the states. States then must report quarterly to the drug manufacturers and report to us the total number of units of each dosage form/strength of their covered outpatient drugs reimbursed during a quarter and the rebate amount to be refunded. This report is due within 60 days of the end of each calendar quarter. The information in the report is based on claims paid by the state Medicaid agency during a calendar quarter. Form CMS–R–144 (Quarterly Report Data) is required from states quarterly to report utilization for any drugs paid for during that quarter. Form CMS–368 (Administrative Data) is required only in those instances where a change to the original data submittal is necessary. *Form Number:* CMS–368 and –R–144 (OMB control number: 0938–0582); *Frequency:* Quarterly; *Affected Public:* State, Local, or Tribal Governments; *Number of Respondents:* 56; *Total Annual Responses:* 224; *Total Annual Hours:* 12,101. (For policy questions regarding this collection contact Andrea Wellington at 410–786–3490.)

3. *Type of Information Collection Request:* New collection (Request for a new control number); *Title of Information Collection:* The Predictive Learning Analytics Tracking Outcome (PLATO™); *Use:* The Predictive Learning Analytics Tracking Outcome (PLATO™) is a web-based application tool that will serve as the centerpiece of the advanced analytics initiative with the Centers for Medicare & Medicaid Services (CMS) and Health Integrity, LLC, the National Benefit Integrity Medicare Integrity Contractor (NBI MEDIC). Developed by Health Integrity, LLC and licensed for one of its contracts—the NBI MEDIC—PLATO™ utilizes a cutting-edge advanced analytics fraud detection process in conjunction with a state-of-the-art web-based user interface tool to present fraud and abuse lead information visually to Medicare Part D plan sponsors. Summary data, based on National Prescription Drug Event Data and actions from all Part D plan sponsors, is shared with law enforcement, CMS, NBI MEDIC, and Part D plan sponsors to review historic actions taken against providers who are enrolled in the Medicare Part D program, which will assist in detecting and preventing fraud, waste, and abuse. *Form Number:* CMS–10517 (OMB control number: 0938—New); *Frequency:* Monthly; *Affected Public:* Private sector—Business or other for-profits and Not-for-profit institutions; *Number of Respondents:* 1,550; *Total Annual Responses:* 1,550; *Total Annual Hours:* 18,600. (For policy questions regarding this collection contact Delois Newkirk at 410–786–1247.)

Dated: July 3, 2014.

Martique Jones,

Deputy Director, Regulations Development Group, Office of Strategic Operations and Regulatory Affairs.

[FR Doc. 2014–16083 Filed 7–10–14; 8:45 am]

BILLING CODE 4120–01–P

DEPARTMENT OF HEALTH AND HUMAN SERVICES

Food and Drug Administration

[Docket No. FDA–2011–D–0125]

Agency Information Collection Activities; Submission for Office of Management and Budget Review; Comment Request; Guidance for Industry on Establishing That a Tobacco Product Was Commercially Marketed in the United States as of February 15, 2007

AGENCY: Food and Drug Administration, HHS.

ACTION: Notice.

SUMMARY: The Food and Drug Administration (FDA) is announcing that a proposed collection of information has been submitted to the Office of Management and Budget (OMB) for review and clearance under the Paperwork Reduction Act of 1995 (PRA).

DATES: Fax written comments on the collection of information by August 11, 2014.

ADDRESSES: To ensure that comments on the information collection are received, OMB recommends that written comments be faxed to the Office of Information and Regulatory Affairs, OMB, Attn: FDA Desk Officer, FAX: 202–395–7285, or emailed to *oira_submission@omb.eop.gov.* All comments should be identified with the OMB control number 0910-New and title ''Guidance for Industry on Establishing That a Tobacco Product Was Commercially Marketed in the United States as of February 15, 2007.'' Also include the FDA docket number found in brackets in the heading of this document.

FOR FURTHER INFORMATION CONTACT: FDA PRA Staff, Office of Operations, Food and Drug Administration, 8455 Colesville Rd., COLE–14526, Silver Spring, MD 20993–0002, *PRAStaff@fda.hhs.gov.*

SUPPLEMENTARY INFORMATION: In compliance with 44 U.S.C. 3507, FDA has submitted the following proposed collection of information to OMB for review and clearance.

Guidance for Industry on Establishing That a Tobacco Product Was Commercially Marketed in the United States as of February 15, 2007—(OMB Control Number 0910-New)

This guidance provides information on how a manufacturer may establish that a tobacco product was commercially marketed in the United States as of February 15, 2007. Grandfathered tobacco products are not considered new tobacco products and thus are not subject to premarket review. A grandfathered tobacco product may also serve as the predicate tobacco product in a Section 905(j) Report: Demonstrating Substantial Equivalence for Tobacco Products (intended to be used toward demonstrating substantial equivalence) for a new tobacco product (section 905(j)(1)(A)(i) of the Federal Food, Drug, and Cosmetic Act (21 U.S.C. 387e(j)(1)(A)(i)).

The guidance recommends that the manufacturer submit information adequate to demonstrate that the tobacco product was commercially marketed in the United States as of February 15, 2007. Examples of such information may include, but are not limited to, the following: dated copies of advertisements, dated catalog pages, dated promotional material, and dated bills of lading.

FDA's estimate of the number of respondents is based on the fact that requesting an Agency determination of the grandfathered status of a tobacco product under the guidance is not required and also on indications of interest of making such request. The number of hours to gather the evidence is FDA's estimate of how long it might take one to review, gather, and submit dated information if making a request for Agency determination. After further consideration of these estimates, FDA has reduced the number of hours to submit this information from 10 to 5 hours.

In the **Federal Register** of April 25, 2011 (76 FR 22903), FDA published a 60-day notice requesting public comment on the proposed collection of information. No comments were submitted on FDA's estimates of the number of respondents or burden. FDA received three comments that generally addressed topics related to the recommendations of the guidance, including questions about the status of tobacco products that were in test markets in the United States as of February 15, 2007, and how much evidence should be submitted.

FDA estimates the burden of this collection of information as follows:

TABLE 1—ESTIMATED ANNUAL REPORTING BURDEN[1]

Activity	Number of respondents	Number of responses per respondent	Total annual responses	Average burden per response	Total hours
Submit evidence of commercial marketing in the United States as of February 15, 2007	150	1	150	5	750

[1] There are no capital costs or operating and maintenance costs associated with this collection of information.

FDA based the estimates on information it received from interactions with the industry that 3 large manufacturers might submit as many as 25 packages of evidence annually, and other manufacturers might submit as many as 125 packages of evidence indicating that their tobacco product was commercially marketed in the United States as of February 15, 2007, for a total of 150 responses annually. FDA further estimates it would take a manufacturer approximately 5 hours to put together this collection of evidence and to submit the package to FDA for review. This is a reduction from FDA's original estimate of 10 hours per response. FDA estimates that it should take approximately 750 hours annually (150 responses times 5 hours for each response) to respond to this collection of information.

Dated: July 8, 2014.

Leslie Kux,

Assistant Commissioner for Policy.

[FR Doc. 2014–16252 Filed 7–10–14; 8:45 am]

BILLING CODE 4164–01–P

DEPARTMENT OF HEALTH AND HUMAN SERVICES

Food and Drug Administration

[Docket No. FDA–2012–E–0434]

Determination of Regulatory Review Period for Purposes of Patent Extension; HORIZANT

AGENCY: Food and Drug Administration, HHS.

ACTION: Notice.

SUMMARY: The Food and Drug Administration (FDA) has determined the regulatory review period for HORIZANT and is publishing this notice of that determination as required by law. FDA has made the determination because of the

submission of an application to the Director of the U.S. Patent and Trademark Office (USPTO), Department of Commerce, for the extension of a patent which claims that human drug product.

ADDRESSES: Submit electronic comments to *http://www.regulations.gov*. Submit written petitions (two copies are required) and written comments to the Division of Dockets Management (HFA–305), Food and Drug Administration, 5630 Fishers Lane, rm. 1061, Rockville, MD 20852. Submit petitions electronically to *http://www.regulations.gov* at Docket No. FDA–2013–S–0610.

FOR FURTHER INFORMATION CONTACT: Beverly Friedman, Office of Management, Center for Drug Evaluation and Research, Food and Drug Administration, 10903 New Hampshire Ave., Bldg. 51, Rm. 6257, Silver Spring, MD 20993–0002, 301–796–7900.

SUPPLEMENTARY INFORMATION: The Drug Price Competition and Patent Term Restoration Act of 1984 (Pub. L. 98–417) and the Generic Animal Drug and Patent Term Restoration Act (Pub. L. 100–670) generally provide that a patent may be extended for a period of up to 5 years so long as the patented item (human drug product, animal drug product, medical device, food additive, or color additive) was subject to regulatory review by FDA before the item was marketed. Under these acts, a product's regulatory review period forms the basis for determining the amount of extension an applicant may receive.

A regulatory review period consists of two periods of time: A testing phase and an approval phase. For human drug products, the testing phase begins when the exemption to permit the clinical investigations of the drug becomes effective and runs until the approval phase begins. The approval phase starts with the initial submission of an application to market the human drug product and continues until FDA grants permission to market the drug product. Although only a portion of a regulatory review period may count toward the actual amount of extension that the Director of USPTO may award (for example, half the testing phase must be subtracted as well as any time that may have occurred before the patent was issued), FDA's determination of the length of a regulatory review period for a human drug product will include all of the testing phase and approval phase as specified in 35 U.S.C. 156(g)(1)(B).

FDA has approved for marketing the human drug product HORIZANT (gabapentin enacarbil). HORIZANT is indicated for the treatment of moderate to severe primary Restless Legs Syndrome in adults. Subsequent to this approval, the USPTO received a patent term restoration application for HORIZANT (U.S. Patent No. 6,818,787) from XenoPort, Inc., and the USPTO requested FDA's assistance in determining this patent's eligibility for patent term restoration. In a letter dated July 2, 2012, FDA advised the USPTO that this human drug product had undergone a regulatory review period and that the approval of HORIZANT represented the first permitted commercial marketing or use of the product. Thereafter, the USPTO requested that FDA determine the product's regulatory review period.

FDA has determined that the applicable regulatory review period for HORIZANT is 2,277 days. Of this time, 1,459 days occurred during the testing phase of the regulatory review period, while 818 days occurred during the approval phase. These periods of time were derived from the following dates:

1. *The date an exemption under section 505(i) of the Federal Food, Drug, and Cosmetic Act (the FD&C Act) (21 U.S.C. 355(i)) became effective:* January 12, 2005. FDA has verified the applicant's claim that the date the investigational new drug application became effective was on January 12, 2005.

2. *The date the application was initially submitted with respect to the human drug product under section 505(b) of the FD&C Act:* January 9, 2009. FDA has verified the applicant's claim that the new drug application (NDA) for Horizant (NDA 22–399) was submitted on January 9, 2009.

3. *The date the application was approved:* April 6, 2011. FDA has verified the applicant's claim that NDA 22–399 was approved on April 6, 2011.

This determination of the regulatory review period establishes the maximum potential length of a patent extension. However, the USPTO applies several statutory limitations in its calculations of the actual period for patent extension. In its application for patent extension, this applicant seeks 882 days of patent term extension.

Anyone with knowledge that any of the dates as published are incorrect may submit to the Division of Dockets Management (see **ADDRESSES**) either electronic or written comments and ask for a redetermination by September 9, 2014. Furthermore, any interested person may petition FDA for a determination regarding whether the applicant for extension acted with due diligence during the regulatory review period by January 7, 2015. To meet its burden, the petition must contain sufficient facts to merit an FDA investigation. (See H. Rept. 857, part 1, 98th Cong., 2d sess., pp. 41–42, 1984.) Petitions should be in the format specified in 21 CFR 10.30.

Interested persons may submit to the Division of Dockets Management (see **ADDRESSES**) electronic or written comments and written or electronic petitions. It is only necessary to send one set of comments. Identify comments with the docket number found in brackets in the heading of this document. If you submit a written petition, two copies are required. A petition submitted electronically must be submitted to *http://www.regulations.gov,* Docket No. FDA–2013–S–0610. Comments and petitions that have not been made publicly available on *http://www.regulations.gov* may be viewed in the Division of Dockets Management between 9 a.m. and 4 p.m., Monday through Friday.

Dated: July 8, 2014.

Leslie Kux,

Assistant Commissioner for Policy.

[FR Doc. 2014–16237 Filed 7–10–14; 8:45 am]

BILLING CODE 4164–01–P

DEPARTMENT OF HEALTH AND HUMAN SERVICES

Food and Drug Administration

[Docket No. FDA–2014–N–0829]

Draft Guidance for Industry on Reporting Drug Sample Information Under Section 6004 of the Affordable Care Act; Availability

AGENCY: Food and Drug Administration, HHS.

ACTION: Notice.

SUMMARY: The Food and Drug Administration (FDA) is announcing the availability of a draft guidance for industry entitled ''Reporting Drug Sample Information Under Section 6004 of the Affordable Care Act.'' On March 23, 2010, the Patient Protection and Affordable Care Act (ACA) was signed into law. The Secretary of Health and Human Services has delegated authority to FDA to issue guidance to identify the information to be submitted under section 6004 and oversee and make arrangements for the collection of such information. FDA is issuing this draft guidance to provide information to assist persons submitting drug sample information under ACA section 6004, and to advise industry of an updated compliance policy. This draft guidance revises the draft compliance policy guide issued on April 3, 2012.

DATES: Although you can comment on any guidance at any time (see 21 CFR 10.115(g)(5)), to ensure that the Agency considers your comment on this draft guidance before it begins work on the final version of the guidance, submit either electronic or written comments on the draft guidance by October 9, 2014. Submit either electronic or written comments concerning the proposed collection of information by September 9, 2014.

ADDRESSES: Submit written requests for single copies of the draft guidance to the Office of Communications, Division of Drug Information, Center for Drug Evaluation and Research, Food and Drug Administration, 10001 New Hampshire Ave., Hillandale Bldg., 4th floor, Rm. 4147, Silver Spring, MD 20993, or the Office of Communication, Outreach and Development, Center for Biologics Evaluation and Research, Food and Drug Administration, 10903 New Hampshire Ave., Bldg. 71, Rm. 3128, Silver Spring, MD 20993–0002. The draft guidance may also be obtained by mail by calling CBER at 1–800–835–4709 or 301–827–1800. Send one self-addressed adhesive label to assist that office in processing your requests. See the **SUPPLEMENTARY INFORMATION** section for electronic access to the draft guidance document.

Submit electronic comments on the draft guidance to *http://www.regulations.gov.* Submit written comments to the Division of Dockets Management (HFA–305), Food and Drug Administration, 5630 Fishers Lane, Rm. 1061, Rockville, MD 20852.

FOR FURTHER INFORMATION CONTACT: Karen Rothschild, Center for Drug Evaluation and Research, Food and Drug Administration, 10903 New Hampshire Ave., Bldg. 51, Rm. 4282, Silver Spring, MD 20903, 301–796–3689, or Stephen Ripley, Center for Biologics Evaluation and Research, Food and Drug Administration, 10903 New Hampshire Ave., Bldg. 71, Rm. 7301, Silver Spring, MD 20903, 240–402–7911.

SUPPLEMENTARY INFORMATION:

I. Background

FDA is announcing the availability of a draft guidance for industry entitled ''Reporting Drug Sample Information Under Section 6004 of the Affordable Care Act.'' On March 23, 2010, the ACA was signed into law. Among its many provisions, section 6004 of the ACA amended the Social Security Act (SSA) by adding section 1128H (42 U.S.C. 1320a–7i). This new section required the submission of certain drug sample information to FDA not later than April 1 of each year, beginning April 1, 2012.

In particular, section 6004 requires reporting about drug sample requests and distributions from manufacturers and authorized distributors of record (ADRs) of applicable drugs (prescription drugs), which are defined in the ACA as drugs subject to section 503(b) of the Federal Food, Drug, and Cosmetic Act (the FD&C Act) (21 U.S.C. 353(b)) for which payment is available under Title XVIII or the SSA or a State plan under Title XIX or XXI of the SSA (or a waiver of such plan). (See 42 U.S.C. 1320a–7i(b)(1).) The Secretary has delegated authority to FDA to issue guidance identifying the information to be submitted under section 6004, and to oversee and arrange for the collection of such information.

Section 6004 is not part of the Prescription Drug Marketing Act (PDMA) but must be read together with that act. Two of the terms used in section 6004 are defined by reference to the PDMA. In addition, the PDMA and its implementing regulations at 21 CFR part 203, subpart D (beginning at § 203.30 (21 CFR 203.30)) require the collection and maintenance of information that must be submitted under section 6004. For example, § 203.38(b) requires that a manufacturer or ADR *maintain* records of drug sample distribution for all samples distributed under section 503(d)(2) or 503(d)(3) of the FD&C Act that are sufficient to permit tracking of sample units to the point of the licensed practitioner. Under section 6004, manufacturers and ADRs must now *submit* much of the same information, aggregated as specified, to FDA.

Another example of how the PDMA and section 6004 are complementary is that the PDMA requires manufacturers and ADRs to collect signatures to ensure that drug samples are distributed on the request of authorized persons and that their receipt is accounted for by persons authorized to take responsibility for them. The purpose of this requirement is to ensure a tight chain of custody, which is why no person other than the practitioner or a specified designee (i.e., not a common carrier) may sign for receipt of drug samples. The requirement in section 6004 to report drug sample requests and distributions for each drug, aggregated by signature, is to ensure that FDA has the information needed to demonstrate compliance with this important PDMA provision.

In the **Federal Register** of April 3, 2012 (77 FR 20025), FDA issued a draft guidance for industry entitled ''Compliance Policy on Reporting Drug Sample Distribution Information Under the Affordable Care Act,'' concerning section 6004. In that draft guidance, FDA explained that the Electronic Submissions Gateway (the Gateway) was available and ready to receive submissions of drug sample information as required by section 6004. That guidance also stated FDA's temporary compliance policy with regard to those submissions, and FDA's intent to issue subsequent guidance with details to better assist persons submitting drug sample information under section 6004 and to advise industry of an updated compliance policy. FDA received comments on the guidance and on the use of the Gateway to submit the drug sample information required by section 6004. After carefully considering submitted comments, FDA has revised the draft guidance, adding more substantive information and announcing an updated compliance policy, and is reissuing it as a draft to facilitate public comment.

This draft guidance is being issued consistent with FDA's good guidance practices regulation (21 CFR 10.115). The draft guidance, when finalized, will represent the Agency's current thinking on reporting drug sample information under section 6004 of the ACA. It does not create or confer any rights for or on any person and does not operate to bind FDA or the public. An alternative approach may be used if such approach satisfies the requirements of the applicable statutes and regulations.

II. Paperwork Reduction Act of 1995

Under the Paperwork Reduction Act of 1995 (the PRA) (44 U.S.C. 3501–3520), Federal Agencies must obtain approval from the Office of Management and Budget (OMB) for each collection of information that they conduct or sponsor. ''Collection of information'' is defined in 44 U.S.C. 3502(3) and 5 CFR 1320.3(c) and includes Agency requests or requirements that members of the public submit reports, keep records, or provide information to a third party. Section 3506(c)(2)(A) of the PRA, 44 U.S.C. 3506(c)(2)(A), requires Federal Agencies to provide a 60-day notice in the **Federal Register** for each proposed collection of information before submitting the collection to OMB for approval. To comply with this requirement, FDA is publishing this notice of the proposed collection of information set forth in this document.

With respect to the collection of information associated with this draft guidance, FDA invites comments on the following topics: (1) Whether the proposed information collected is necessary for the proper performance of

FDA's functions, including whether the information will have practical utility; (2) the accuracy of FDA's estimated burden of the proposed information collected, including the validity of the methodology and assumptions used; (3) ways to enhance the quality, utility, and clarity of the information collected; and (4) ways to minimize the burden of information collected on the respondents, including through the use of automated collection techniques, when appropriate, and other forms of information technology.

Under section 6004 of the ACA, manufacturers and ADRs must submit the following drug sample information to FDA each year: (1) The identity and quantity of drug samples requested; (2) the identity and quantity of drug samples distributed; (3) the name, address, professional designation, and signature of any person who makes or signs for the request; and (4) any other category of information determined appropriate by the Secretary. The draft guidance clarifies the specific information that should be submitted under this provision and the manner in which that information should be submitted.

The draft guidance states that FDA's Gateway became available for drug sample reporting under 6004 in March 2012, and that FDA intends to continue the use of the Gateway for this purpose. The Gateway accepts submissions in XML format. Technical specifications for the data type and size for submitting each of the items listed previously may be found in the ACA Industry Submission Specifications User Guide, available at: *http://www.fda.gov/downloads/Drugs/GuidanceComplianceRegulatoryInformation/UCM297610.pdf.*

The Gateway requests that manufacturers and ADRs provide the following information, which is sufficient to comply with the reporting requirements set forth in section 6004 of the ACA:

- The year the sample was distributed to the provider;
- the type of business (i.e., either manufacturer or distributor);
- the business name of the manufacturer or distributor that distributed the drug sample;
- the trade name and dosage of the drug sample distributed;
- the total quantity of the drug requested by the practitioner during the calendar year;
- the total quantity of the drug distributed to the practitioner during the calendar year;
- the first name, last name, and middle initial of the practitioner;
- the practitioner's designation (i.e., M.D., D.O., P.A., or more);
- the street number, street name, city, state, and ZIP code address of the practitioner;
- an electronic affirmation that a signed written request for drug samples was received by the manufacturer or ADR from the licensed practitioner and is available to FDA upon request;
- an electronic affirmation that a signature of the requesting practitioner, or appropriate designee, acknowledging receipt of drug samples has been received by the manufacturer or ADR and is available to FDA upon request;
- the first name, last name, and middle initial of a practitioner's designee; and
- the address, including street number, street, city, state, and ZIP code of the designee.

Based on the current number of submissions since the enactment of section 6004 of the ACA, we estimate that annually a total of approximately 120 to 250 manufacturers or ADRs (''number of respondents'' in table 1) will submit the drug sample information specified, resulting in approximately 120 to 250 annual submissions (''total annual responses'' in table 1). We also estimate that preparing and submitting this information to FDA will take approximately 500 to 600 hours for each manufacturer or ADR (''hours per response'' in table 1). We base the burden hour estimate on information we obtained from two manufacturers who have submitted the drug sample information since the enactment of section 6004 of the ACA. We are using the upper end of these ranges to calculate the burden in table 1, and the burden hour estimate includes the time that may be needed to submit any followup or additional information to FDA. In addition, for purposes of this notice, FDA assumes that only manufacturers will submit the required information on behalf of all samples distributed, thereby excluding the need for ADRs to do so.

FDA estimates the burden of this collection of information as follows:

TABLE 1—ESTIMATED ANNUAL REPORTING BURDEN [1]

Section 6004 of the ACA	Number of respondents	Number of responses per respondent	Total annual responses	Average burden per response	Total hours
Submission of drug sample information	250	1	250	600	150,000

[1] There are no capital costs or operating and maintenance costs associated with this collection of information.

III. Comments

Interested persons may submit either electronic comments regarding this document to *http://www.regulations.gov* or written comments to the Division of Dockets Management (see **ADDRESSES**). It is only necessary to send one set of comments. Identify comments with the docket number found in brackets in the heading of this document. Received comments may be seen in the Division of Dockets Management between 9 a.m. and 4 p.m., Monday through Friday, and will be posted to the docket at *http://www.regulations.gov.*

IV. Electronic Access

Persons with access to the Internet may obtain the document at either *http://www.fda.gov/Drugs/GuidanceComplianceRegulatoryInformation/Guidances/default.htm, http://www.fda.gov/BiologicsBloodVaccines/GuidanceComplianceRegulatoryInformation/default.htm,* or *http://www.regulations.gov.*

Dated: July 8, 2014.

Leslie Kux,

Assistant Commissioner for Policy.

[FR Doc. 2014–16238 Filed 7–10–14; 8:45 am]

BILLING CODE 4164–01–P

DEPARTMENT OF HEALTH AND HUMAN SERVICES

Food and Drug Administration

[Docket No. FDA–2014–D–0902]

Draft Guidance for Industry on Abbreviated New Drug Application Submissions; Amendments and Easily Correctable Deficiencies Under the Generic Drug User Fee Amendments; Availability

AGENCY: Food and Drug Administration, HHS.

ACTION: Notice.

SUMMARY: The Food and Drug Administration (FDA) is announcing the availability of a draft guidance for industry entitled ''ANDA Submissions—Amendments and Easily Correctable Deficiencies Under GDUFA.'' The guidance document is intended to assist applicants in preparing to submit to FDA amendments to abbreviated new drug applications (ANDAs) or prior approval supplements (PASs) under the Federal Food, Drug, and Cosmetic Act (the FD&C Act), by explaining how the Generic Drug User Fee Amendments of 2012 (GDUFA) performance metric goals apply to these submissions. When finalized, this guidance will replace the December 2001 guidance for industry entitled ''Major, Minor, and Telephone Amendments to Abbreviated New Drug Applications'' in consideration of the new amendment review tier system and performance goals under GDUFA.

DATES: Although you can comment on any guidance at any time (see 21 CFR 10.115(g)(5)), to ensure that the Agency considers your comment on this draft guidance before it begins work on the final version of the guidance, submit either electronic or written comments on the draft guidance by September 9, 2014.

ADDRESSES: Submit written requests for single copies of the draft guidance to the Division of Drug Information, Center for Drug Evaluation and Research, Food and Drug Administration, 10903 New Hampshire Ave., Bldg. 51, Rm. 2201, Silver Spring, MD 20993–0002 or the Office of Communication, Outreach and Development, Center for Biologics Evaluation and Research, Food and Drug Administration, 10903 New Hampshire Ave., Bldg. 71, Rm. 3128, Silver Spring, MD 20993–0002. Send one self-addressed adhesive label to assist that office in processing your requests. See the **SUPPLEMENTARY INFORMATION** section for electronic access to the draft guidance document.

Submit electronic comments on the draft guidance to *http://www.regulations.gov*. Submit written comments to the Division of Dockets Management (HFA–305), Food and Drug Administration, 5630 Fishers Lane, rm. 1061, Rockville, MD 20852.

FOR FURTHER INFORMATION CONTACT: Elizabeth Giaquinto, Center for Drug Evaluation and Research, Food and Drug Administration, 10903 New Hampshire Ave., Bldg. 75, Rm. 1670, Silver Spring, MD 20993–0002, 240–402–7930, *Elizabeth.Giaquinto@fda.hhs.gov* or Stephen Ripley, Center for Biologics Evaluation and Research, Food and Drug Administration, 10903 New Hampshire Ave., Bldg. 71, Rm. 7301, Silver Spring, MD 20993–0002, 240–402–7911, *stephen.ripley@fda.hhs.gov*.

SUPPLEMENTARY INFORMATION:

I. Background

FDA is announcing the availability of a draft guidance for industry entitled ''ANDA Submissions—Amendments and Easily Correctable Deficiencies Under GDUFA.'' On July 9, 2012, GDUFA (Pub. L. 112–144, Title III) was signed into law by the President to speed the delivery of safe and effective generic drugs to the public and reduce costs to industry. Under GDUFA, FDA agreed to certain performance goals and procedures for the review of amendments submitted to original ANDAs and PASs filed on or after October 1, 2014.

This draft guidance describes how FDA intends to classify major amendments, minor amendments, and easily correctable deficiencies (ECDs). Specifically, the draft guidance defines the types of amendments and describes the GDUFA performance metric goals for the amendment tiers, the process for submitting amendments, and dispute resolution procedures regarding amendment classifications.

In accordance with the Commitment Letter, the GDUFA performance metrics described in the draft guidance only apply to amendments to original ANDAs and PASs submitted on or after October 1, 2014, and do not apply to amendments submitted on or after October 1, 2014, that amend original ANDAs or PASs submitted before October 1, 2014.

Elsewhere in this issue of the **Federal Register**, FDA is announcing another draft guidance entitled ''ANDA Submissions—Prior Approval Supplements Under GDUFA,'' which describes FDA's performance metric goals and clarifies how FDA will handle a PAS and amendments to a PAS for an ANDA.

This draft guidance is being issued consistent with FDA's good guidance practices regulation (21 CFR 10.115). The draft guidance, when finalized, will represent the Agency 02BC;s current thinking on ''ANDA Submissions—Amendments and Easily Correctable Deficiencies Under GDUFA.'' It does not create or confer any rights for or on any person and does not operate to bind FDA or the public. An alternative approach may be used if such approach satisfies the requirements of the applicable statutes and regulations.

II. Paperwork Reduction Act of 1995

This draft guidance refers to previously approved collections of information found in FDA regulations. These collections of information are subject to review by the Office of Management and Budget (OMB) under the Paperwork Reduction Act of 1995 (44 U.S.C. 3501–3520). The collections of information in 21 CFR 314.96 have been approved under OMB control number 0910–0001.

III. Comments

Interested persons may submit either electronic comments regarding this document to *http://www.regulations.gov* or written comments to the Division of Dockets Management (see **ADDRESSES**). It is only necessary to send one set of comments. Identify comments with the docket number found in brackets in the heading of this document. Received comments may be seen in the Division of Dockets Management between 9 a.m. and 4 p.m., Monday through Friday, and will be posted to the docket at *http://www.regulations.gov*.

III. Electronic Access

Persons with access to the Internet may obtain the document at either *http://www.fda.gov/Drugs/GuidanceComplianceRegulatoryInformation/Guidances/default.htm, http://www.fda.gov/BiologicsBloodVaccines/GuidanceComplianceRegulatoryInformation/Guidances/default.htm,* or *http://www.regulations.gov*.

Dated: July 8, 2014.

Leslie Kux,

Assistant Commissioner for Policy.

[FR Doc. 2014–16235 Filed 7–10–14; 8:45 am]

BILLING CODE 4164–01–P

DEPARTMENT OF HEALTH AND HUMAN SERVICES

Food and Drug Administration

[Docket No. FDA–2014–D–0901]

Draft Guidance for Industry on Abbreviated New Drug Application Submissions—Prior Approval Supplements Under the Generic Drug User Fee Amendments of 2012; Availability

AGENCY: Food and Drug Administration, HHS.

ACTION: Notice.

SUMMARY: The Food and Drug Administration (FDA) is announcing the availability of a draft guidance for industry entitled ''ANDA Submissions—Prior Approval

Supplements Under GDUFA.'' The Generic Drug User Fee Amendments of 2012 (GDUFA) enables FDA to assess user fees to fund critical and measurable improvements to FDA's generic drugs program. This draft guidance is intended to assist applicants preparing to submit to FDA prior approval supplements (PASs) and amendments to PASs for abbreviated new drug applications (ANDAs). It describes FDA's performance metric goals for PASs and clarifies how FDA will handle a PAS and amendments to a PAS for an ANDA subject to the GDUFA performance metric goals.

DATES: Although you can comment on any guidance at any time (see 21 CFR 10.115(g)(5)), to ensure that the Agency considers your comment on this draft guidance before it begins work on the final version of the guidance, submit either electronic or written comments on the draft guidance by September 9, 2014.

ADDRESSES: Submit written requests for single copies of this draft guidance to the Division of Drug Information, Center for Drug Evaluation and Research, Food and Drug Administration, 10903 New Hampshire Ave., Bldg. 51, rm. 2201, Silver Spring, MD 20993–0002, or the Office of Communication, Outreach, and Development, Center for Biologics Evaluation and Research, 10903 New Hampshire Ave., Bldg. 71, rm. 3128, Silver Spring, MD 20993–0002. Send one self-addressed adhesive label to assist that office in processing your requests. See the SUPPLEMENTARY INFORMATION section for electronic access to the guidance document.

Submit electronic comments on the draft guidance to *http://www.regulations.gov.* Submit written comments to the Division of Dockets Management (HFA–305), Food and Drug Administration, 5630 Fishers Lane, Rm. 1061, Rockville, MD 20852.

FOR FURTHER INFORMATION CONTACT: Benjamin Chacko, Center for Drug Evaluation and Research, Food and Drug Administration, 10903 New Hampshire Ave., Bldg. 75, Rm. 1673, Silver Spring, MD 20993–0002, 240–402–7924 or Stephen Ripley, Center for Biologics Evaluation and Research, Food and Drug Administration, 10903 New Hampshire Ave., Bldg. 71, Rm. 7301, Silver Spring, MD 20993–0002, 240–402–7911.

SUPPLEMENTARY INFORMATION:

I. Background

FDA is announcing the availability of a draft guidance for industry entitled ''ANDA Submissions—Prior Approval Supplements Under GDUFA.'' On July 9, 2012, the President signed GDUFA (Pub. L. 112–144, Title III) into law. GDUFA is based on an agreement negotiated by FDA and representatives of the generic drug industry to address a growing number of regulatory challenges. GDUFA aims to ensure timely access to safe, high-quality, low-cost generic drugs. GDUFA enables FDA to assess user fees to fund critical and measurable improvements to FDA's generic drugs program and to bring greater predictability and timeliness to the review of generic drug applications.

GDUFA requires that FDA and human generic drug manufacturers meet certain commitments. In the GDUFA Commitment Letter, FDA committed to review and act on a certain percentage of PASs within a specified time period from the date of submission for receipts in fiscal years (FY) 2015–2017. The percentage of PASs that FDA has committed to review and act on varies for each fiscal year, and the deadlines for review depend on whether a PAS requires an inspection.

This draft guidance describes the performance metric goals that FDA agreed to in the Commitment Letter and clarifies how FDA will review a PAS and amendments to a PAS for an ANDA subject to the GDUFA performance metric goals. The GDUFA performance metrics described in this draft guidance only apply to ANDA applicants that submit a PAS on or after October 1, 2014. These performance metrics do not apply to new drug applications (NDAs), biologics license applications (BLAs), supplements filed for NDAs or BLAs, or changes being effected (CBE) supplements and annual report filings to NDAs, BLAs, or ANDAs.

Elsewhere in this issue of the **Federal Register**, FDA is publishing another draft guidance entitled ''ANDA Submissions—Amendments and Easily Correctable Deficiencies Under GDUFA,'' which explains how the GDUFA performance metric goals apply to amendments made to ANDAs and to PASs.

This draft guidance is being issued consistent with FDA's good guidance practices regulation (21 CFR 10.115). The guidance, when finalized, will represent the Agency's current thinking on how GDUFA relates to prior approval supplements for ANDAs. It does not create or confer any rights for or on any person and does not operate to bind FDA or the public. An alternative approach may be used if such approach satisfies the requirements of the applicable statutes and regulations.

II. The Paperwork Reduction Act of 1995

This draft guidance refers to previously approved collections of information that are subject to review by the Office of Management and Budget (OMB) under the Paperwork Reduction Act of 1995 (44 U.S.C. 3501–3520). The collections of information for supplements and amendments in 21 CFR part 314 have been approved under OMB control number 0910–0001. The collection of information for manufacturer registration in 21 CFR part 207 has been approved under OMB control number 0910–0045. The collection of information for manufacturer compliance with current good manufacturing practices in 21 CFR part 211 has been approved under OMB control number 0910–0139.

III. Comments

Interested persons may submit either electronic comments regarding this document to *http://www.regulations.gov* or written comments to the Division of Dockets Management (see **ADDRESSES**). It is only necessary to send one set of comments. Identify comments with the docket number found in brackets in the heading of this document. Received comments may be seen in the Division of Dockets Management between 9 a.m. and 4 p.m., Monday through Friday, and will be posted to the docket at *http://www.regulations.gov.*

IV. Electronic Access

Persons with access to the Internet may obtain the document at either *http://www.fda.gov/Drugs/GuidanceComplianceRegulatoryInformation/Guidances/default.htm, http://www.fda.gov/BiologicsBloodVaccines/GuidanceComplianceRegulatoryInformation/Guidance/default.htm,* or *http://www.regulations.gov.*

Dated: July 8, 2014.

Leslie Kux,

Assistant Commissioner for Policy.

[FR Doc. 2014–16236 Filed 7–10–14; 8:45 am]

BILLING CODE 4164–01–P

DEPARTMENT OF HEALTH AND HUMAN SERVICES

Food and Drug Administration

[Docket No. FDA–2014–N–0894]

2014 Scientific Meeting of the National Antimicrobial Resistance Monitoring System; Public Meeting; Request for Comments

AGENCY: Food and Drug Administration, HHS.

ACTION: Notice of public meeting; request for comments.

SUMMARY: The Food and Drug Administration (FDA) is announcing a public meeting entitled ''2014 Scientific Meeting of the National Antimicrobial Resistance Monitoring System.'' The purpose of the meeting is to discuss progress made in achieving the goals of the National Antimicrobial Resistance Monitoring System (NARMS) Strategic Plan: 2012–2016.

Dates And Time: The public meeting will be held on August 12 and 13, 2014, from 8 a.m. to 5 p.m.

ADDRESSES: *Location:* The public meeting will be held at the FDA White Oak Campus, 10903 New Hampshire Ave., Building 31, Great Room (rm. 1503A), Silver Spring, MD 20993–0002. Please note that visitors to the White Oak Campus must enter through Building 1. The White Oak Campus location is a Federal facility with security procedures. For parking and security information, please refer to *http://www.fda.gov/AboutFDA/WorkingatFDA/BuildingsandFacilities/WhiteOakCampusInformation/ucm241740.htm*.

FOR FURTHER INFORMATION CONTACT: Laura Bradbard, Center for Veterinary Medicine (HFV–12), Food and Drug Administration, 7519 Standish Pl., Rockville, MD 20855, 240–276–9109, FAX: 240–276–9115, *laura.bradbard@fda.hhs.gov*.

SUPPLEMENTARY INFORMATION: NARMS periodically conducts public meetings to inform stakeholders of NARMS activities and receive comments on ways to improve. The last two public NARMS meetings (held in 2010 and 2011) focused on recommendations made by the FDA Science Board Advisory Subcommittee in 2007. These meetings dealt with enhancing international partnerships, and improving NARMS sampling. Since then, NARMS created the 2012–2016 Strategic Plan that addressed all of the Science Board's recommendations (*http://www.fda.gov/downloads/AnimalVeterinary/SafetyHealth/AntimicrobialResistance/NationalAntimicrobialResistanceMonitoringSystem/UCM236283.pdf*). A number of strategic planning goals already have been achieved and several of the objectives outlined in the plan are ongoing. The purpose of this meeting will be to provide updates on progress of the NARMS 2012–2016 strategic plan, discuss possible future activities, and receive comments for the official record. A number of items will be discussed including comparisons of new and old slaughter sampling methods, the role of NARMS in foodborne outbreaks, results of interagency research projects using advanced detection methods, and how these scientific advances impact FDA decisionmaking.

Registration and Requests for Oral Presentations: Interested persons may make oral presentations on the topic of the discussion of the meeting. Oral presentations from the public during the open public comment period will be scheduled between approximately 3:50 p.m. and 4:50 p.m. on August 13, 2014. Those desiring to make oral presentations should notify the contact person by July 29, 2014, and submit a brief statement of the general nature of information they wish to present. In an effort to accommodate all who desire to speak, time allotted for each presentation may be limited. The contact person will inform each speaker of their schedule prior to the meeting.

Registration is required for the meeting. Please send registration information (including name, title, organization, address, and telephone and fax numbers) by email to Laura Bradbard (see **FOR FURTHER INFORMATION CONTACT**) by July 29, 2014. There is no fee to register for the public meeting, and registration will be on a first-come, first-served basis.

If you need special accommodations due to a disability, please contact Laura Bradbard (see **FOR FURTHER INFORMATION CONTACT**) at least 7 days in advance.

Comments: Regardless of attendance at the public meeting, interested persons may submit either electronic or written comments regarding the topic to be discussed at the meeting. Submit electronic comments to *http://www.regulations.gov*. Submit written comments to the Division of Dockets Management (HFA–305), Food and Drug Administration, 5630 Fishers Lane, rm. 1061, Rockville, MD 20852. It is only necessary to send one set of comments. Identify comments with the docket number found in brackets in the heading of this document. Received comments may be seen in the Division of Dockets Management between 9 a.m. and 4 p.m., Monday through Friday. The docket will remain open for written or electronic comments for 30 days following the meeting.

Agenda: The meeting will address monitoring and research for NARMS. The final agenda for the public meeting will be made available on the Agency's Web site at *http://www.fda.gov/AnimalVeterinary/SafetyHealth/AntimicrobialResistance/NationalAntimicrobialResistanceMonitoringSystem/ucm059135.htm* and will be posted to the docket at*http://www.regulations.gov* no later than 2 weeks prior to the meeting.

Transcripts: FDA will prepare a meeting transcript and make it available on the Agency's Web site (see *Agenda*) after the meeting. FDA anticipates that transcripts will be available approximately 60 business days after the meeting. The transcript will be available for public examination at the Division of Dockets Management (HFA–305), Food and Drug Administration, 5630 Fishers Lane, rm. 1061, Rockville, MD 20852, between 9 a.m. and 4 p.m., Monday through Friday. A transcript will also be available in either hardcopy or on CD–ROM after submission of a Freedom of Information request. Written requests are to be sent to Division of Freedom of Information (ELEM–1029), Food and Drug Administration, 12420 Parklawn Dr., Element Bldg., Rockville, MD 20857.

Dated: July 7, 2014.

Leslie Kux,

Assistant Commissioner for Policy.

[FR Doc. 2014–16207 Filed 7–10–14; 8:45 am]

BILLING CODE 4164–01–P

DEPARTMENT OF HEALTH AND HUMAN SERVICES

Office of Inspector General

Solicitation of Information and Recommendations for Revising OIG's Non-Binding Criteria for Implementing Permissive Exclusion Authority Under Section 1128(b)(7) of the Social Security Act

AGENCY: Office of Inspector General (OIG), HHS.

ACTION: Notice and Opportunity for Comment.

SUMMARY: This **Federal Register** notice informs the public that OIG: (1) Is considering revising the Non-Binding Criteria for Implementing Permissive Exclusion Authority Under Section 1128(b)(7) of the Social Security Act (62 FR 67392, December 24, 1997), and (2) is soliciting input from the public for OIG to consider in developing the revised criteria.

DATES: To ensure consideration, public comments must be delivered to the address provided below by no later than 5 p.m. on September 9, 2014.

ADDRESSES: In commenting, please refer to file code OIG–1271–N. Because of staff and resource limitations, we cannot accept comments by facsimile (FAX) transmission.

You may submit comments in one of three ways (no duplicates, please):

1. *Electronically.* You may submit electronic comments on specific recommendations and proposals through the Federal eRulemaking Portal at *http://www.regulations.gov*.

2. *By regular, express, or overnight mail.* You may send written comments to the following address: Patrice Drew, Office of Inspector General, Department of Health and Human Services, Attention: OIG–1271–N, Room 5296, Cohen Building, 330 Independence Avenue SW., Washington, DC 20201. Please allow sufficient time for mailed comments to be received before the close of the comment period.

3. *By hand or courier.* If you prefer, you may deliver, by hand or courier, your written comments before the close of the comment period to Patrice Drew, Office of Inspector General, Department of Health and Human Services, Cohen Building, 330 Independence Avenue SW., Washington, DC 20201. Because access to the interior of the Cohen Building is not readily available to persons without Federal Government identification, commenters are encouraged to schedule their delivery with one of our staff members at (202) 619–1368.

For information on viewing public comments, please see the Supplementary Information section.

FOR FURTHER INFORMATION CONTACT: Patrice Drew, Department of Health and Human Services, Office of Inspector General, Office of External Affairs, at (202) 619–1368.

SUPPLEMENTARY INFORMATION:

Inspection of Public Comments: All comments received before the end of the comment period are available for viewing by the public. All comments will be posted on *http://www.regulations.gov* as soon as possible after the closing of the comment period. Comments received timely will also be available for public inspection as they are received at Office of Inspector General, Department of Health and Human Services, Cohen Building, 330 Independence Avenue SW., Washington, DC 20201, Monday through Friday of each week from 10 a.m. to 4 p.m. To schedule an appointment to view public comments, phone (202) 619–1368.

Background

Section 1128(b)(7) of the Social Security Act (Act) authorizes the Secretary, and by delegation the Inspector General, to exclude an individual or entity from participation in the Federal health care programs for engaging in conduct described in sections 1128A and 1128B of the Act. In general, OIG may seek to exclude any person who violates the Federal False Claims Act, 31 U.S.C. 3729–3733, or the Civil Monetary Penalties Law, section 1128A of the Act. For example, submitting or causing the submission of false or fraudulent claims or soliciting or paying kickbacks in violation of the Federal Anti-Kickback Statute, section 1128B of the Act, can result in exclusion from participation in Medicare, Medicaid, and all other Federal health care programs. On October 24, 1997, OIG published a proposed policy statement in the **Federal Register** (62 FR 55410) in the form of non-binding criteria to be used by OIG in assessing whether to impose a permissive exclusion under section 1128(b)(7) of the Act. On December 24, 1997, OIG published the final policy statement in the **Federal Register** (62 FR 67392).

Since 1997, OIG has used these criteria to evaluate whether to impose a permissive exclusion under section 1128(b)(7) of the Act or release this authority in exchange for the defendant's entering into an Integrity Agreement with OIG. On the basis of our experience evaluating permissive exclusion in False Claims Act and administrative cases over the past 17 years, we are considering revising the existing criteria. We believe revised criteria may help the provider community understand how OIG exercises its discretion in cases under section 1128(b)(7) of the Act. We also believe that updated guidance could better reflect the state of the health care industry today, including the changes in legal requirements and the emergence of the health care compliance industry.

In considering possible revisions to the criteria, we are soliciting comments, recommendations, and other suggestions from concerned parties on how best to revise the criteria to address relevant issues and to provide useful guidance to the health care industry. The issues we are considering include, but are not limited to: (1) Whether there should be differences in the criteria for individuals and entities and (2) whether and how to consider a defendant's existing compliance program.

After reviewing any timely submitted comments, we will decide whether and how to revise the non-binding criteria for use in evaluating exclusion under 1128(b)(7) of the Act where the defendant has defrauded the Federal health care programs.

Dated: June 7, 2014.

Daniel R. Levinson,

Inspector General.

[FR Doc. 2014–16222 Filed 7–10–14; 8:45 am]

BILLING CODE 4150–04–P

DEPARTMENT OF HEALTH AND HUMAN SERVICES

Office of Inspector General

Special Fraud Alert: Laboratory Payments to Referring Physicians

AGENCY: Office of Inspector General (OIG), HHS.

ACTION: Notice.

SUMMARY: This Special Fraud Alert addresses compensation paid by laboratories to referring physicians and physician group practices (collectively, physicians) for blood specimen collection, processing, and packaging, and for submitting patient data to a registry or database. OIG has issued a number of guidance documents and advisory opinions addressing the general subject of remuneration offered and paid by laboratories to referring physicians, including the 1994 Special Fraud Alert on Arrangements for the Provision of Clinical Laboratory Services, the OIG Compliance Program Guidance for Clinical Laboratories, and Advisory Opinion 05–08. In these and other documents, we have repeatedly emphasized that providing free or below-market goods or services to a physician who is a source of referrals, or paying such a physician more than fair market value for his or her services, could constitute illegal remuneration under the anti-kickback statute. This Special Fraud Alert supplements these prior guidance documents and advisory opinions and describes two specific trends OIG has identified involving transfers of value from laboratories to physicians that we believe present a substantial risk of fraud and abuse under the anti-kickback statute.

I. The Anti-Kickback Statute

One purpose of the anti-kickback statute is to protect patients from inappropriate medical referrals or recommendations by health care professionals who may be unduly influenced by financial incentives. Section 1128B(b) of the Social Security Act (the Act) makes it a criminal offense to knowingly and willfully offer, pay, solicit, or receive any remuneration to induce, or in return for, referrals of items or services reimbursable by a Federal health care program. When remuneration is paid purposefully to induce or reward referrals of items or services payable by a Federal health care program, the anti-kickback statute is violated. By its terms, the statute ascribes criminal liability to parties on both sides of an impermissible ''kickback'' transaction. Violation of the statute constitutes a felony punishable

by a maximum fine of $25,000, imprisonment up to 5 years, or both. Conviction will also lead to exclusion from Federal health care programs, including Medicare and Medicaid. OIG may also initiate administrative proceedings to exclude persons from the Federal health care programs or to impose civil money penalties for fraud, kickbacks, and other prohibited activities under sections 1128(b)(7) and 1128A(a)(7) of the Act.

II. Remuneration From Laboratories To Referring Physicians

Arrangements between referring physicians and laboratories historically have been subject to abuse and were the topic of one of the OIG's earliest Special Fraud Alerts.[1] In that Special Fraud Alert, we stated that, ''[w]henever a laboratory offers or gives to a source of referrals anything of value not paid for at fair market value, the inference may be made that the thing of value is offered to induce the referral of business.'' More generally, we have, on various occasions, repeated our position that arrangements providing free or below-market goods or services to actual or potential referral sources are suspect and may violate the anti-kickback statute, depending on the circumstances.[2]

Likewise, when a laboratory pays a physician more than fair market value for the physician's services or for services the laboratory does not actually need or for which the physician is otherwise compensated, the anti-kickback statute is implicated. Such payments are suspect under the anti-kickback statute because of the implication that one purpose of the payments is to induce the physician's Federal health care program referrals. OIG also historically has been concerned with arrangements in which the amounts paid to a referral source take into account the volume or value of business generated by the referral source.

Arrangements in which laboratories provide free or below-market goods or services to physicians or make payments to physicians that are not commercially reasonable in the absence of Federal health care program referrals potentially raise four major concerns typically associated with kickbacks—corruption of medical judgment, overutilization, increased costs to the Federal health care programs and beneficiaries, and unfair competition. This is because such transfers of value may induce physicians to order tests from a laboratory that provides them with remuneration, rather than the laboratory that provides the best, most clinically appropriate service. Such transfers of value also may induce physicians to order more laboratory tests than are medically necessary, particularly when the transfers of value are tied to, or take into account, the volume or value of business generated by the physician. We are particularly concerned about these types of arrangements because the choice of laboratory, as well as the decision to order laboratory tests, typically is made or strongly influenced by the physician, with little or no input from patients.

Although physicians may order any tests they believe are appropriate to diagnose and treat their patients, Medicare will pay for laboratory tests only if they meet Medicare coverage criteria and are reasonable and necessary.[3] Moreover, claims that include items or services resulting from a violation of the anti-kickback statute are not payable by Medicare and may constitute false claims under the False Claims Act, even if the items or services are medically necessary.[4] OIG recognizes that the lawfulness of any particular arrangement under the anti-kickback statute depends on the intent of the parties. Such intent may be evidenced by the arrangement's characteristics, including its legal structure, its operational safeguards, and the actual conduct of the parties to the arrangement. Nonetheless, we believe the following types of arrangements between laboratories and physicians are suspect under the anti-kickback statute.

A. Blood-Specimen Collection, Processing, and Packaging Arrangements

OIG has become aware of arrangements under which clinical laboratories are providing remuneration to physicians to collect, process, and package patients' specimens. This Special Fraud Alert addresses arrangements under which laboratories pay physicians, either directly or indirectly (such as through an arrangement with a marketing or other agent) to collect, process, and package patients' blood specimens (Specimen Processing Arrangements).[5] Specimen Processing Arrangements typically involve payments from laboratories to physicians for certain specified duties, which may include collecting the blood specimens, centrifuging the specimens, maintaining the specimens at a particular temperature, and packaging the specimens so that they are not damaged in transport. Payments under Specimen Processing Arrangements typically are made on a per-specimen or per-patient-encounter basis and often are associated with expensive or specialized tests.

Medicare allows the person who collects a specimen to bill Medicare for a nominal specimen collection fee in certain circumstances, including times when the person draws a blood sample through venipuncture (*i.e.,* inserting into a vein a needle with syringe or vacuum tube to draw the specimen).[6] Medicare allows such billing only when: (1) It is the accepted and prevailing practice among physicians in the locality to make separate charges for drawing or collecting a specimen and (2) it is the customary practice of the physician performing such services to bill separate charges for drawing or collecting the specimen.[7] Only one collection fee is allowed for each type of specimen for each patient encounter, regardless of the number of specimens drawn.[8] Physicians who satisfy the specimen collection fee criteria and choose to bill Medicare for the specimen collection must use Current Procedural Terminology (CPT) Code 36415, ''Routine venipuncture—Collection of venous blood by venipuncture.''[9] [10]

[1] Special Fraud Alert: Arrangements for the Provision of Clinical Laboratory Services (Oct. 1994), *reprinted at* 59 FR 65,372, 65,377 (Dec. 19, 1994).

[2] *See, e.g.,* Advisory Opinion 11–07, p. 7.

[3] Section 1862(a)(1)(A) of the Act.

[4] 31 U.S.C. 3729 et seq.

[5] The same principles described in this Special Fraud Alert apply to arrangements that are similar or analogous to Specimen Processing Arrangements, including arrangements under which clinical laboratories pay physicians to collect and package patients' buccal swabs or urine specimens or provide free or below-market point of care urine testing cups to health care providers who use the cups to perform billable in-office testing.

[6] Section 1833(h)(3) of the Act; *Medicare Claims Processing Manual,* CMS Pub. 100–04, Chapter 16, section 60.1.

[7] *Medicare Claims Processing Manual,* CMS Pub. 100–04, Chapter 16, section 60.1.1.

[8] *Medicare Claims Processing Manual,* CMS Pub. 100–04, Chapter 16, section 60.1.

[9] The five character codes and descriptions included in this document are obtained from Current Procedural Terminology (CPT®), copyright 2014 by the American Medical Association (AMA). CPT is developed by the AMA as a listing of descriptive terms and five character identifying codes and modifiers for reporting medical services and procedures. Any use of CPT outside of this document should refer to the most current version of the Current Procedural Terminology available from AMA. Applicable FARS/DFARS apply.

[10] CPT code 36415 is included on the clinical laboratory fee schedule. As of the date of issuance of this Special Fraud Alert, Medicare pays a specimen collection fee of $5 for samples collected from individuals in skilled nursing facilities and by laboratories on behalf of home health agencies and a specimen collection fee of $3 for all other samples. *See, e.g.,* Clinical Laboratory Fee Schedule—January 2014 Release, *available at http://www.cms.gov/Medicare/Medicare-Fee-for-Service-Payment/ClinicalLabFeeSched/*

Medicare reimburses physicians for processing and packaging specimens for transport to a clinical laboratory through a bundled payment.[11] Physicians who wish to report the work involved in preparing a specimen to send to a laboratory may use CPT code 99000, ''Handling and/or conveyance of specimen for transfer from the office to a laboratory.'' [12] CPT code 99000 is intended to reflect the work involved to prepare a specimen prior to sending it to a laboratory, including centrifuging a specimen, separating serum, labeling tubes, packing the specimens for transport, filling out laboratory forms, and supplying necessary insurance information and other documentation.[13]

The anti-kickback statute is implicated when a clinical laboratory pays a physician for services. Whether an actual violation of the statute occurs depends on the intent of the parties—the anti-kickback statute prohibits the knowing and willful payment of such amounts if even one purpose of the payment is to induce or reward referrals of Federal health care program business. This is true regardless of whether the payment is fair market value for services rendered. The probability that a payment is for an illegitimate purpose is increased, however, if a payment exceeds fair market value or if it is for a service for which the physician is paid by a third party, including Medicare.

When determining the fair market value of a physician's services, a clinical laboratory should consider whether the services for which it may compensate the physician have been, or may be, paid for, including through a bundled payment, by Medicare. Additionally, the laboratory should consider whether payment is appropriate at all; if the services for which the laboratory intends to compensate the physician are paid for by a third party through other means, such as payments intended to reimburse the physician for overhead expenses, any payment by the laboratory to the physician may constitute double payment for the physician's services and, consequently, provide evidence of unlawful intent.

Characteristics of a Specimen Processing Arrangement that may be evidence of such unlawful purpose include, but are not limited to, the following:

- Payment exceeds fair market value for services actually rendered by the party receiving the payment.
- Payment is for services for which payment is also made by a third party, such as Medicare.
- Payment is made directly to the ordering physician rather than to the ordering physician's group practice, which may bear the cost of collecting and processing the specimen.
- Payment is made on a per-specimen basis for more than one specimen collected during a single patient encounter or on a per-test, per-patient, or other basis that takes into account the volume or value of referrals.
- Payment is offered on the condition that the physician order either a specified volume or type of tests or test panel, especially if the panel includes duplicative tests (*e.g.,* two or more tests performed using different methodologies that are intended to provide the same clinical information), or tests that otherwise are not reasonable and necessary or reimbursable.
- Payment is made to the physician or the physician's group practice, despite the fact that the specimen processing is actually being performed by a phlebotomist placed in the physician's office by the laboratory or a third party.

OIG's concerns regarding Specimen Processing Arrangements are not abated when those arrangements apply only to specimens collected from non-Federal health care program patients. Arrangements that ''carve out'' Federal health care program beneficiaries or business from otherwise questionable arrangements implicate the anti-kickback statute and may violate it by disguising remuneration for Federal health care program business through the payment of amounts purportedly related to non-Federal health care program business. Because physicians typically wish to minimize the number of laboratories to which they refer for reasons of convenience and administrative efficiency, Specimen Processing Arrangements that carve out Federal health care program business may nevertheless be intended to influence physicians' referrals of Federal health care program business to the offering laboratories.

Finally, because the anti-kickback statute ascribes criminal liability to parties on both sides of an impermissible ''kickback'' arrangement, physicians who enter into Specimen Processing Arrangements with laboratories also may be at risk under the statute.

B. Registry Payments

OIG has become aware of arrangements under which clinical laboratories are establishing, coordinating, or maintaining databases, either directly or through an agent, purportedly to collect data on the demographics, presentation, diagnosis, treatment, outcomes, or other attributes of patients who have undergone, or who may undergo, certain tests performed by the offering laboratories. Typically these are specialized and expensive tests paid for by Federal health care programs. This Special Fraud Alert addresses such ''Registries'' or ''Registry Arrangements,'' whether they are referred to as ''registries'' or ''observational outcomes databases'' or by other terminology.

Laboratories that participate in Registry Arrangements often assert that they are intended to advance clinical research to promote treatment, to provide physicians with valuable clinical knowledge for patients with similar disease profiles, and to provide other benefits to physicians or the health care industry generally. Registry Arrangements may take various forms; however, they typically involve payments from laboratories to physicians for certain specified duties, including, by way of example only, submitting patient data to be incorporated into the Registry, answering patient questions about the Registry, and reviewing Registry reports.

Registry Arrangements may induce physicians to order medically unnecessary or duplicative tests, including duplicative tests performed for the purpose of obtaining comparative data, and to order those tests from laboratories that offer Registry

clinlab.html; specifically CLAB2014.EffJan1.Full.xlsx (the 2014 Clinical Diagnostic Laboratory Fee Schedule), *available at http://www.cms.gov/apps/ama/license.asp?file=/ClinicalLabFeeSched/downloads/14CLAB.zip*; and Protecting Access to Medicare Act of 2014, Public Law 113–93, § 216(a), 128 Stat. 1040 and 1053–1059 (to be codified at 42 U.S.C. 1395m–1(b)(5)) (2014).

[11] Since 2003, CPT code 99000 has been listed as a ''Bundled Code'' in the Medicare Physician Fee Schedule (MPFS). *See, e.g.,* Physician Fee Schedule—January 2014 Release, *available at http://www.cms.gov/Medicare/Medicare-Fee-for-Service-Payment/PhysicianFeeSched/PFS-Relative-Value-Files-Items/RVU14A.html*; *specifically* PPRRVU14_V1219.xlsx (the 2014 National Physician Fee Schedule Relative Value File) and RVUPUF14.pdf (containing information on services covered by the MPFS, including fee schedule status indicators), *available at http://www.cms.gov/Medicare/Medicare-Fee-for-Service-Payment/PhysicianFeeSched/Downloads/RVU14A.zip.* A ''Bundled Code'' means that ''[p]ayment for covered services are always bundled into payment for other services not specified.'' RVUPUF14.pdf, Attachment A.

[12] Even though physicians are not directly reimbursed under this code, as they are with CPT code 36145, they may choose to report this CPT code so that the costs associated with the services they perform are taken into account in CMS's calculation of the practice expense component of a procedure's relative value unit. *See* Overview, MPFS, *available at https://www.cms.gov/apps/physician-fee-schedule/overview.aspx.*

[13] *Coding Clarification: Handling and/or Conveyance of Specimen for Transfer from the Physician's Office to a Laboratory,* CPT Assistant (AMA), Oct. 1999, at 11.

Arrangements in lieu of other, potentially clinically superior, laboratories. OIG recognizes that whether any particular Registry Arrangement violates the anti-kickback statute depends on the intent of the parties to the arrangement. Payments from a laboratory to a physician to compensate the physician for services related to data collection and reporting may be reasonable in certain limited circumstances. However, the anti-kickback statute prohibits the knowing and willful payment of such compensation if even one purpose of the payments is to induce or reward referrals of Federal health care program business.

Characteristics of a Registry Arrangement that may be evidence of such unlawful purpose include, but are not limited to, the following:

- The laboratory requires, encourages, or recommends that physicians who enter into Registry Arrangements perform the tests with a stated frequency (*e.g.,* four times per year) to be eligible to receive, or to not receive a reduction in, compensation.
- The laboratory collects comparative data for the Registry from, and bills for, multiple tests that may be duplicative (*e.g.,* two or more tests performed using different methodologies that are intended to provide the same clinical information) or that otherwise are not reasonable and necessary.
- Compensation paid to physicians pursuant to Registry Arrangements is on a per-patient or other basis that takes into account the value or volume of referrals.
- Compensation paid to physicians pursuant to Registry Arrangements is not fair market value for the physicians' efforts in collecting and reporting patient data.
- Compensation paid to physicians pursuant to Registry Arrangements is not supported by documentation, submitted by the physicians in a timely manner, memorializing the physicians' efforts.
- The laboratory offers Registry Arrangements only for tests (or disease states associated with tests) for which it has obtained patents or that it exclusively performs.
- When a test is performed by multiple laboratories, the laboratory collects data only from the tests it performs.
- The tests associated with the Registry Arrangement are presented on the offering laboratory's requisition in a manner that makes it more difficult for the ordering physician to make an independent medical necessity decision with regard to each test for which the laboratory will bill (*e.g.,* disease-related panels).

Other characteristics not listed above may increase the risk of fraud and abuse associated with a Registry Arrangement or provide evidence of unlawful intent. For example, the risk of fraud and abuse would be particularly high if a laboratory were to pay, and collect data for its Registry from, only a subset of physicians who were selected on the basis of their prior or anticipated referral volume, rather than their specialty, sub-specialty, or other relevant attribute.

The anti-kickback statute does not prohibit laboratories from engaging in, or paying compensation for, legitimate research activities. However, claims that Registries are intended to promote and support clinical research and treatment are not sufficient to disprove unlawful intent. Even legitimate actions taken to substantiate such claims, including, for example, retaining an independent Institutional Review Board to develop study protocols and participation guidelines, will not protect a Registry Arrangement if one purpose of the arrangement is to induce or reward referrals. Furthermore, for the reasons set forth in section II.A above, OIG's concerns regarding Registry Arrangements are not abated when those arrangements apply only to data collected from tests performed on non-Federal health care program patients' specimens.

Finally, because the anti-kickback statute ascribes criminal liability to parties on both sides of an impermissible ''kickback'' arrangement, physicians who enter into Registry Arrangements with laboratories also may be at risk under the statute.

III. Conclusion

OIG is concerned about the risks that Specimen Processing Arrangements and Registry Arrangements pose under the anti-kickback statute. This Special Fraud Alert reiterates our longstanding concerns about payments from laboratories to physicians in excess of the fair market value of the physicians' services and payments that reflect the volume or value of referrals of Federal health care program business. Should interested parties continue to have questions about the structure of a particular Specimen Processing Arrangement or Registry Arrangement, the OIG Advisory Opinion process remains available. Information about the process may be found at: *http://oig.hhs.gov/faqs/advisory-opinions-faq.asp.*

To report suspected fraud involving Registry Arrangements, Specimen Processing Arrangements, or similar arrangements, contact the OIG Hotline at *https://forms.oig.hhs.gov/hotlineoperations/or* by phone at 1–800–447–8477 (1–800–HHS–TIPS).

Dated: June 7, 2014.

Daniel R. Levinson,

Inspector General.

[FR Doc. 2014–16219 Filed 7–10–14; 8:45 am]

BILLING CODE P

DEPARTMENT OF HEALTH AND HUMAN SERVICES

National Institutes of Health

Prospective Grant of Evaluation Option Exclusive License: Development of Granulysin Immunotherapy

AGENCY: National Institutes of Health, HHS.

ACTION: Notice.

SUMMARY: This is notice, in accordance with 35 U.S.C. 209 and 37 CFR 404, that the National Institutes of Health, Department of Health and Human Services, is contemplating the grant of an exclusive evaluation option license to practice the inventions embodied in U.S. Provisional Patent Application. No. 61/250,601, filed October 12, 2009, HHS Ref. No.: E–158–2009/0–US–01, Titled: ''Granulysin Immunotherapy''; International Application No. PCT/US2010/052036, filed October 8, 2010, HHS Ref. No.: E–158–2009/0–PCT–02, Titled: ''Granulysin Immunotherapy''; U.S. Patent Application No. 13/501,726, filed April 12, 2012, HHS Ref. No.: E–158–2009/0–US–06, Titled: ''Granulysin Immunotherapy'', and foreign equivalents thereof to Orpheden Therapeutics, Inc. (''Orpheden''), a Delaware corporation doing business principally in the state of Illinois. The patent rights in these inventions have been assigned to the United States of America.

The prospective exclusive evaluation option license territory may be worldwide and the field of use may be limited to the development of 15kD granulysin as set forth in the Licensed Patent Rights for the treatment of human cancers.

Upon the expiration or termination of the exclusive evaluation option license, Orpheden will have the exclusive right to execute an exclusive commercialization license which will supersede and replace the exclusive evaluation option license with no greater field of use and territory than granted in the exclusive evaluation option license.

DATES: Only written comments and/or applications for a license which are received by the NIH Office of Technology Transfer on or before July 28, 2014 will be considered.

ADDRESSES: Requests for copies of the patent application, inquiries, comments, and other materials relating to the contemplated exclusive license should be directed to: Whitney A. Hastings, Ph.D., Licensing and Patenting Manager, Office of Technology Transfer, National Institutes of Health, 6011 Executive Boulevard, Suite 325, Rockville, MD 20852–3804; Telephone: (301) 451–7337; Facsimile: (301) 402–0220; Email: *hastingw@mail.nih.gov.*

SUPPLEMENTARY INFORMATION: Granulysin is a cytolytic and proinflammatory molecule expressed by activated human cytotoxic T lymphocytes (CTLs) and natural killer (NK) cells when they are attached to disease cells including infection, cancer, transplantation, autoimmunity, skin and reproductive maladies. Granulysin is made in a 15-kDa form that is cleaved into a 9-kDa form at both the amino and the carboxy termini. Granulysin is broadly cytolytic against tumors and microbes. It has been implicated in many of diseases and studies suggest that granulysin may be a useful therapeutic directly contributing to immunity against foreign molecules for a wide variety of diseases.

This technology describes the use of 15 kD granulysin for enhancing immune responses.

Investigators at the NIH have discovered that 15 kD granulysin activates monocytes and induces them to differentiate into mature dendritic cells and activates allospecific T cells.

The proof of this principle was demonstrated by mice expressing granulysin *in vivo* showing markedly improved anti-tumor responses, with increased numbers of activated dendritic cells and cytokine-producing T cells. Furthermore, current data suggest that dendritic cells matured with 15 kD granulysin are superior to the well-established GM–CSF induction. There appears to be a significant market opportunity for use of the 15 kD granulysin for the *ex vivo* dendritic cell maturation and adoptive immunotherapy.

The prospective exclusive evaluation option license, and a subsequent exclusive commercialization license, may be granted unless the NIH receives written evidence and argument that establishes that the grant of the license would not be consistent with the requirements of 35 U.S.C. 209 and 37 CFR part 404 within fifteen (15) days from the date of this published notice.

Complete applications for a license in the field of use filed in response to this notice will be treated as objections to the grant of the contemplated exclusive evaluation option license. Comments and objections submitted to this notice will not be made available for public inspection and, to the extent permitted by law, will not be released under the Freedom of Information Act, 5 U.S.C. 552.

Dated: July 10, 2014.

Richard U. Rodriguez,

Director, Division of Technology Development and Transfer, Office of Technology Transfer, National Institutes of Health.

[FR Doc. 2014–16267 Filed 7–10–14; 8:45 am]

BILLING CODE 4140–01–P

DEPARTMENT OF HEALTH AND HUMAN SERVICES

National Institutes of Health

Prospective Grant of Evaluation Option Exclusive License: Development of a Diagnostic and Prognostic for Breast and Prostate Cancer Using Spatial Genome Organization

AGENCY: National Institutes of Health, HHS.

ACTION: Notice.

SUMMARY: This is notice, in accordance with 35 U.S.C. 209 and 37 CFR 404, that the National Institutes of Health, Department of Health and Human Services, is contemplating the grant of an exclusive evaluation option license to practice the inventions embodied in U.S. Provisional Application 61/094,318 filed September 4, 2008 entitled ''Method for detection of cancer based on spatial genome organization'' (HHS Ref No. E–283–2008/0–US–01); International Application PCT/US2009/055857 filed September 3, 2009 entitled ''Method for detection of cancer based on spatial genome organization'' (HHS Ref No. E–283–2008/0–PCT–02); U.S. Patent Application 13/062,247 filed March 4, 2011 entitled ''Method for detection of cancer based on spatial genome organization'' (HHS Ref No. E–283–2008/0–US–0; and foreign equivalents thereof to Radial Genomics, Ltd. (''RG''), a company located in Cambridge, U.K. The patent rights in these inventions have been assigned to the United States of America.

The prospective exclusive evaluation option license territory may be worldwide and the field of use may be limited to the use of the Licensed Patent Rights for the diagnosis, prognosis, and prediction of cancer.

Upon the expiration or termination of the exclusive evaluation option license, RG will have the exclusive right to execute an exclusive commercialization license which will supersede and replace the exclusive evaluation option license with no greater field of use and territory than granted in the exclusive evaluation option license.

DATES: Only written comments and/or applications for a license which are received by the NIH Office of Technology Transfer on or before July 28, 2014 will be considered.

ADDRESSES: Requests for copies of the patent application, inquiries, comments, and other materials relating to the contemplated exclusive license should be directed to: Whitney A. Hastings, Ph.D., Licensing and Patenting Manager, Office of Technology Transfer, National Institutes of Health, 6011 Executive Boulevard, Suite 325, Rockville, MD 20852–3804; Telephone: (301) 451–7337; Facsimile: (301) 402–0220; Email: *hastingw@mail.nih.gov.*

SUPPLEMENTARY INFORMATION: The successful treatment of cancer is correlated with the early detection of the cancerous cells. Conventional cancer diagnosis is largely based on qualitative morphological criteria, but more accurate quantitative tests could greatly increase early detection of malignant cells. It has been observed that the spatial arrangement of DNA in the nucleus is altered in cancer cells in comparison to normal cells. Therefore, it is possible to distinguish malignant cells by mapping the position of labeled marker genes in the nucleus. This NIH invention provides methods of detecting abnormal cells in a sample using the spatial position of one or more genes within the nucleus of a cell, as well as a kit for detecting abnormal cells using such methods. It also provides methods of identifying gene markers for abnormal cells using the spatial position of one or more genes within the nucleus of a cell. Therefore, this invention could be used as a very effective cancer diagnostic from tumor biopsies after non-invasive techniques such as a mammogram or PSA assay have suggested cancer.

The primary product arising from this technology would be a diagnostic for cancer using tumor biopsies after non-invasive techniques such as a mammogram or PSA assay have suggested the presence of cancer. This novel in vitro diagnostic test for cancer has use in oncology laboratories of hospitals and commercial clinical laboratories. It has several advantages

over other diagnostics including sensitive cancer detection, small sample size (100–200 cells), probes to all genomic regions are available, and it does not require mitotic chromosomes. Additionally, it is applicable to both solid tumors and blood cancers, allows analysis of subpopulations from biopsy, measures metastatic potential of cancer cells, determines tumor type, and can be alternative to or complementary to conventional diagnostics.

The prospective exclusive evaluation option license, and a subsequent exclusive commercialization license, may be granted unless the NIH receives written evidence and argument that establishes that the grant of the license would not be consistent with the requirements of 35 U.S.C. 209 and 37 CFR part 404 within fifteen (15) days from the date of this published notice.

Complete applications for a license in the field of use filed in response to this notice will be treated as objections to the grant of the contemplated exclusive evaluation option license. Comments and objections submitted to this notice will not be made available for public inspection and, to the extent permitted by law, will not be released under the Freedom of Information Act, 5 U.S.C. 552.

Dated: July 10, 2014.

Richard U. Rodriguez,

Director, Division of Technology Development and Transfer, Office of Technology Transfer, National Institutes of Health.

[FR Doc. 2014–16268 Filed 7–10–14; 8:45 am]

BILLING CODE 4140–01–P

DEPARTMENT OF HEALTH AND HUMAN SERVICES

National Institutes of Health

Prospective Grant of Exclusive License: Development of Molecular-Based Cancer Diagnostic and Prognostic

AGENCY: National Institutes of Health, HHS.

ACTION: Notice.

SUMMARY: This is notice, in accordance with 35 U.S.C. 209 and 37 CFR 404, that the National Institutes of Health, Department of Health and Human Services, is contemplating the grant of an exclusive patent license to Heragen, Inc., which is located in Benicia, California to practice the inventions embodied in the following patent applications:

1. U.S. Provisional Application 61/152,597 filed February 13, 2009 entitled ''Molecular-Based Method of Cancer Diagnosis and Prognosis'' (HHS Ref No. E–023–2009/0–US–01).

2. International Application PCT/US2010/024026 filed February 12, 2010 entitled ''Molecular-Based Method of Cancer Diagnosis and Prognosis'' (HHS Ref No. E–023–2009/0–PCT–02).

3. U.S. Patent No. 8,715,928 issued May 6, 2014 entitled ''Molecular-Based Method of Cancer Diagnosis and Prognosis'' (HHS Ref No. E–023–2009/0–US–03).

4. U.S. Patent Application No. 14/215,574, filed March 17, 2014 entitled ''Molecular-Based Method of Cancer Diagnosis and Prognosis'' (HHS Ref No. E–023–2009/0–US–04).

The patent rights in these inventions have been assigned to the United States of America.

The prospective exclusive license territory may be worldwide and the field of use may be limited to the use of the Licensed Patent Rights to develop FDA approved and/or 510K cleared tests and kits for the diagnosis and prognosis of breast and lung cancer.

DATES: Only written comments and/or applications for a license which are received by the NIH Office of Technology Transfer on or before August 11, 2014 will be considered.

ADDRESSES: Requests for copies of the patent application, inquiries, comments, and other materials relating to the contemplated exclusive license should be directed to: Whitney A. Hastings, Ph.D., Licensing and Patenting Manager, Office of Technology Transfer, National Institutes of Health, 6011 Executive Boulevard, Suite 325, Rockville, MD 20852–3804; Telephone: (301) 451–7337; Facsimile: (301) 402–0220; Email: *hastingw@mail.nih.gov*.

SUPPLEMENTARY INFORMATION: Molecular profiling with high throughput assays has gained utility in the management of select cancer patients and several gene expression-based assays are now marketed for improved prognostic accuracy for patients with cancer.

This technology describes a genomics based diagnostic assay for the diagnosis and prognosis of cancer patients. Using a mouse model of breast cancer, the inventors identified a gene expression signature that can predict the outcome for human breast cancer patients with as few as six genes. The gene signature includes a total of 79 cancer survival factor-associated genes and was validated using available genomic test sets that were based on previously conducted human clinical trials. More recently, the six-gene-model was validated for cancers other than breast using multiple, independent, publicly-available human lung cancer data sets. In addition to predicting the outcome of cancer patients, this technology could also be used to stratify patients for further therapy and treat patients by administering therapeutic agents that alter the activity of one of the aforementioned cancer survival factor-associated genes.

The prospective exclusive license will be royalty bearing and will comply with the terms and conditions of 35 U.S.C. 209 and 37 CFR part 404. The prospective exclusive license may be granted unless within thirty (30) days from the date of this published notice, the NIH receives written evidence and argument that establishes that the grant of the license would not be consistent with the requirements of 35 U.S.C. 209 and 37 CFR part 404.

Any additional applications for a license in the field of use filed in response to this notice will be treated as objections to the grant of the contemplated exclusive license. Comments and objections submitted to this notice will not be made available for public inspection and, to the extent permitted by law, will not be released under the Freedom of Information Act, 5 U.S.C. 552.

Dated: July 10, 2014.

Richard U. Rodriguez,

Director, Division of Technology Development and Transfer, Office of Technology Transfer, National Institutes of Health.

[FR Doc. 2014–16266 Filed 7–10–14; 8:45 am]

BILLING CODE 4140–01–P

DEPARTMENT OF HEALTH AND HUMAN SERVICES

National Institutes of Health

Government-Owned Inventions; Availability for Licensing

AGENCY: National Institutes of Health, HHS.

ACTION: Notice.

SUMMARY: The inventions listed below are owned by an agency of the U.S. Government and are available for licensing in the U.S. in accordance with 35 U.S.C. 209 and 37 CFR part 404 to achieve expeditious commercialization of results of federally-funded research and development. Foreign patent applications are filed on selected inventions to extend market coverage for companies and may also be available for licensing.

FOR FURTHER INFORMATION CONTACT: Licensing information and copies of the U.S. patent applications listed below may be obtained by writing to the indicated licensing contact at the Office of Technology Transfer, National Institutes of Health, 6011 Executive

Boulevard, Suite 325, Rockville, Maryland 20852–3804; telephone: 301–496–7057; fax: 301–402–0220. A signed Confidential Disclosure Agreement will be required to receive copies of the patent applications.

SUPPLEMENTARY INFORMATION: Technology descriptions follow.

Delta Tocopherol for the Treatment of Lysosomal Storage Disorders

Description of Technology: Delta Tocopherol is identified as a novel therapeutic to treat lysosomal disorders characterized by defective cellular cholesterol and other lipid trafficking and storage. Currently, there is no treatment for many of Lysosomal Storage Disorders. In some cases, such as Gaucher disease, enzyme replacement therapy and substrate deduction treatment are available with very high cost (over $100,000 per patient per year). NIH investigators have identified an unexpected and previously unrecognized use for delta tocopherol, which is a form of vitamin E, in the treatment of diseases and conditions related to lysosomal storage disorders. Scientists at the National Center for Advancing Translational Sciences, NIH discovered a clear difference between the effects of delta-tocopherol and alpha tocopherol on the cell-based disease models of Niemann Pick C (NPC) disease. They found that while delta-tocopherol significantly reduced the cholesterol accumulation in NPC cells and reduced the size of enlarged lysosomes, alpha-tocopherol only showed weak effects in the same cells.

The present invention can be used to develop new therapies involving delta-tocopherol to treat lysosomal disorders, such as Niemann-Pick type C disease, Mucopolysaccharidoses disorder, and Neuronal Ceroid Lipofuscinoses. This invention provides potential novel methods for the modulation of cholesterol and other lipids' recycling. It may be also possible to use delta-tocopherol for the reduction of the size of enlarged lysosomes caused by accumulation of lipids and macromolecules.

Potential Commercial Applications:

- Therapeutics for lysosomal disorders
- Therapeutics for Niemann-Pick type C disease

Competitive Advantages: delta-tocopherol is a novel lead compound for drug development to treat a variety of lysosomal storage diseases characterized by lipid/macromolecule accumulation and defective lipid trafficking.

Development Stage:

- Early-stage
- In vitro data available

Inventors: Wei Zheng et al. (NCATS).

Publications:

1. Xu M, et al. delta-Tocopherol reduces lipid accumulation in Niemann-Pick type C1 and Wolman cholesterol storage disorders. J Biol Chem. 2012 Nov 16;287(47):39349–60. [PMID 23035117]
2. Yu D, et al. Niemann-Pick Disease Type C: Induced Pluripotent Stem Cell-Derived Neuronal Cells for Modeling Neural Disease and Evaluating Drug Efficacy. J Biomol Screen. 2014 Jun 6. pii: 1087057114537378. [PMID 24907126]

Intellectual Property: HHS Reference No. E–294–2009/0—

- US Patent Application No. 13/810,774 filed 17 Jan 2013
- EP Patent Application No. 11741023.3 filed 19 July 2011

Related Technology: HHS Reference No. E–148–2011/0—PCT Patent Application No. PCT/US2013070156 filed 14 Nov 2013, entitled ''Tocopherol and Tocopheryl Quinone Derivatives as Correctors of Lysosomal Storage Disorders.''

Licensing Contact: Suryanarayana Vepa, Ph.D., J.D.; 301–435–5020; *vepas@mail.nih.gov.*

Collaborative Research Opportunity: The National Center for Advancing Translational Sciences is seeking statements of capability or interest from parties interested in collaborative research to further develop, evaluate, or commercialize particular therapeutic uses of delta tocopherol. Please contact Dr. Wei Zheng at *wzheng@mail.nih.gov* for more information.

^{18}F-Labeled Calcofluor Derivatives for PET Imaging and Diagnosis of *Aspergillus* Infection

Description of Technology: Aspergillus is a common fungal lung infection with high mortality rates in immune compromised patients. The inability to diagnose this infection impedes treatment. Blood based diagnostic tests for this infection lack sensitivity and specificity due to cross reactivity. Other methods of diagnosis are invasive and labor intensive. The ability to accurately and non-invasively diagnose infection in *Aspergillus* immune compromised populations may greatly improve treatment and lower mortality rates. This technology uses ^{18}F-labeled calcofluor derivatives for positron emission tomography (PET) imaging of filamentous fungal infections. ^{18}F-labeled calcofluor derivatives have low toxicity, high binding specificity to *Aspergillus* species due to uptake by *Aspergillus*-specific siderphore system, and low binding affinity to patient tissue. These compounds may be used for rapid and accurate PET diagnostic imaging of infection by species of *Aspergillus.*

Potential Commercial Applications: Diagnosis of *Aspergillus* infection.

Competitive Advantages: Non-invasive, low toxicity, specific for *Aspergillus.*

Development Stage: In vivo data available (animal).

Inventors: Peter Williamson (NIAID), John Panepinto (Univ. Buffalo), Dale Kiesewetter (NIBIB), Jin Qui (NIAID).

Publications:

1. Palmer GE, et al. The diverse roles of autophagy in medically important fungi. Autophagy. 2008 Nov;4(8):982–8. [PMID 18927489]
2. Panepinto JC, et al. Deletion of the Aspergillus fumigatus gene encoding the Ras-related protein RhbA reduces virulence in a model of invasive pulmonary aspergillosis. Infect Immun. 2003 May;71(5):2819–26. [PMID 12704156]
3. Desoubeaux D, et al., Diagnosis of invasive pulmonary aspergillosis: Updates and recommendations, Med Mal Infect. 2014 Mar; 44(3):89–101. [PMID 24548415]

Intellectual Property: HHS Reference No. E–449–201/0—US Provisional Application No. 61/894,754 filed 23 Oct 2013.

Licensing Contact: Edward (Tedd) Fenn; 424–297–0336; *Tedd.fenn@nih.gov.*

Collaborative Research Opportunity: The National Institute of Allergy and Infectious Diseases is seeking statements of capability or interest from parties interested in collaborative research to further develop, evaluate, or commercialize this technology. For collaboration opportunities, please contact Nadine Chien at 301–827–0258.

Multifunctional RNA Nanoparticles as Therapeutic Agents

Description of Technology: The promise of RNA interference based therapeutics is made evident by the recent surge of biotechnological drug companies that pursue such therapies and their progression into human clinical trials. The present invention discloses novel RNA and RNA/DNA nanoparticles including multiple siRNAs, RNA aptamers, fluorescent dyes, and proteins. These RNA nanoparticles are useful for various nanotechnological applications. This technology has a higher detection sensitivity and higher silencing efficiencies of targeted genes than conventional siRNAs. This technology has significant therapeutic potential against multiple disease types, including cancer and viral infections.

Potential Commercial Applications:

- Treatment for various diseases

- Clinical research
- Basic research

Competitive Advantages:
- More sensitivity
- Higher efficiency
- Low cytotoxicity
- Multiple functionality
- Multiple targets
- Visualization
- Controlled activation

Development Stage:
- In vitro data available
- In vivo data available

Inventors: Bruce A. Shapiro, Kirill A. Afonin, Angelica N. Martins, Mathias D. Viard (all of NCI)

Intellectual Property: HHS Reference No. E–765–2013/0—US Provisional Application No. 61/878,758 filed 17 Sep 2013.

Related Technologies:
- HHS Reference No. E–039–2012
- HHS Reference No. E–156–2014

Licensing Contact: John Stansberry, Ph.D.; 301–435–5236; stansbej@mail.nih.gov

Collaborative Research Opportunity: The National Cancer Institute is seeking statements of capability or interest from parties interested in collaborative research to further develop, evaluate or commercialize scaling up, animal models, multiple targets, delivery. For collaboration opportunities, please contact John D. Hewes, Ph.D. at *hewesj@mail.nih.gov*.

Nucleic Acid Nanoparticles for Triggering RNA Interference

Description of Technology: RNA interference (RNAi) is a naturally occurring cellular post-transcriptional gene regulation process that utilizes small double-stranded RNAs to trigger and guide gene silencing. By introducing synthetic RNA duplexes called small-interfering RNAs (siRNAs), we can harness the RNAi machinery for therapeutic gene control and the treatment of various diseases.

The present invention discloses RNA, RNA–DNA, DNA–RNA, hybrid nanocubes consisting of a DNA or RNA core (composed of six strands) with attached RNA or DNA hybrid duplexes. The nanocubes can induce the reassociation of the RNA duplexes, which can then be processed by the human recombinant Dicer enzyme, thus activating RNAi. This technology opens a new route for the development of ''smart'' nucleic acid based nanoparticles for a wide range of biomedical applications. Immune responses can be controlled by altering the composition of the particles.

Potential Commercial Applications:
- Treatment for various diseases
- Clinical research
- Basic research

Competitive Advantages:
- Low cytotoxicity
- Chemical stability
- More specificity
- Controlled activation
- Multiple targets
- Visualization

Development Stage: In vitro data available

Inventors: Bruce A. Shapiro, Kirill A. Afonin, Mathias D. Viard (all of NCI)

Publications:

1. Afonin KA, et al. Computational and experimental characterization of RNA cubic nanoscaffolds. Methods. 2014 May 15;67(2):256–65. [PMID 24189588]
2. Afonin KA, et al. In vitro assembly of cubic RNA-based scaffolds designed in silico. Nat Nanotechnol. 2010 Sep;5(9):676–82. [PMID 20802494]

Intellectual Property: HHS Reference No. E–156–2014/0—US Provisional Application 61/989,520 filed 06 May 2014

Related Technologies:
- HHS Reference No. E–765–2013
- HHS Reference No. E–039–2012

Licensing Contact: John Stansberry, Ph.D.; 301–435–5236; stansbej@mail.nih.gov

Collaborative Research Opportunity: The National Cancer Institute is seeking statements of capability or interest from parties interested in collaborative research to further develop, evaluate or commercialize scaling up, animal models, multiple targets, delivery. For collaboration opportunities, please contact John D. Hewes, Ph.D. at *hewesj@mail.nih.gov*.

Dated: July 10, 2014.

Richard U. Rodriguez,

Director, Division of Technology Development and Transfer, Office of Technology Transfer, National Institutes of Health.

[FR Doc. 2014–16265 Filed 7–10–14; 8:45 am]

BILLING CODE 4140–01–P

DEPARTMENT OF HEALTH AND HUMAN SERVICES

National Institutes of Health

National Institute of Environmental Health Sciences; Notice of Closed Meeting

Pursuant to section 10(d) of the Federal Advisory Committee Act, as amended (5 U.S.C. App.), notice is hereby given of the following meeting.

The meeting will be closed to the public in accordance with the provisions set forth in sections 552b(c)(4) and 552b(c)(6), Title 5 U.S.C., as amended. The grant applications and the discussions could disclose confidential trade secrets or commercial property such as patentable material, and personal information concerning individuals associated with the grant applications, the disclosure of which would constitute a clearly unwarranted invasion of personal privacy.

Name of Committee: National Institute of Environmental Health Sciences Special Emphasis Panel,Pathway to Independence Awards.

Date: August 6, 2014.

Time: 1:00 p.m. to 5:00 p.m.

Agenda: To review and evaluate grant applications.

Place: National Institute of Environmental Health Sciences, Keystone Building, Conference Room 1002, 530 Davis Drive, Research Triangle Park, NC 27709, (Telephone Conference Call).

Contact Person: Leroy Worth, Ph.D., Scientific Review Officer, Scientific Review Branch, Division of Extramural Research and Training, Nat. Institute of Environmental Health Sciences, P. O. Box 12233, MD EC–30/Room 3171, Research Triangle Park, NC 27709, (919) 541–0670, *worth@niehs.nih.gov.*

(Catalogue of Federal Domestic Assistance Program Nos. 93.115, Biometry and Risk Estimation—Health Risks from Environmental Exposures; 93.142, NIEHS Hazardous Waste Worker Health and Safety Training; 93.143, NIEHS Superfund Hazardous Substances—Basic Research and Education; 93.894, Resources and Manpower Development in the Environmental Health Sciences; 93.113, Biological Response to Environmental Health Hazards; 93.114, Applied Toxicological Research and Testing, National Institutes of Health, HHS).

Dated: July 8, 2014.

Carolyn Baum,

Program Analyst, Office of Federal Advisory Committee Policy.

[FR Doc. 2014–16260 Filed 7–10–14; 8:45 am]

BILLING CODE 4140–01–P

DEPARTMENT OF HEALTH AND HUMAN SERVICES

National Institutes of Health

National Institute of General Medical Sciences; Notice of Closed Meetings

Pursuant to section 10(d) of the Federal Advisory Committee Act, as amended (5 U.S.C. App.), notice is hereby given of the following meetings.

The meetings will be closed to the public in accordance with the provisions set forth in sections 552b(c)(4) and 552b(c)(6), Title 5 U.S.C., as amended. The grant applications and the discussions could disclose confidential trade secrets or commercial property such as patentable material, and personal information concerning individuals associated with the grant applications, the disclosure of which would constitute a clearly unwarranted invasion of personal privacy.

Name of Committee: National Institute of General Medical Sciences Special Emphasis Panel, Peer Review of P20 Grant Applications.

Date: August 7, 2014.

Time: 12:00 p.m. to 2:00 p.m.

Agenda: To review and evaluate grant applications.

Place: National Institutes of Health, Natcher Building, 45 Center Drive, Room 3An.12, Bethesda, MD 20892 (Telephone Conference Call).

Contact Person: Lee Warren Slice, Ph.D., Scientific Review Officer, Office of Scientific Review, National Institute of General Medical Sciences, National Institutes of Health, 45 Center Drive, Room 3An.12, Bethesda, MD 20892, 301–594–2769, *slicelw@mail.nih.gov*.

Name of Committee: National Institute of General Medical Sciences Special Emphasis Panel, Program Project Review in Anesthesiology.

Date: August 7, 2014.

Time: 2:30 p.m. to 5:30 p.m.

Agenda: To review and evaluate grant applications.

Place: National Institutes of Health, Natcher Building, 45 Center Drive, Room 3An.18F, Bethesda, MD 20892 (Telephone Conference Call).

Contact Person: Brian R. Pike, Ph.D., Scientific Review Officer, Office of Scientific Review, National Institute of General Medical Sciences, National Institutes of Health, 45 Center Drive, Room 3An.18, Bethesda, MD 20892, 301–594–3907, *pikbr@mail.nih.gov*.

(Catalogue of Federal Domestic Assistance Program Nos. 93.375, Minority Biomedical Research Support; 93.821, Cell Biology and Biophysics Research; 93.859, Pharmacology, Physiology, and Biological Chemistry Research; 93.862, Genetics and Developmental Biology Research; 93.88, Minority Access to Research Careers; 93.96, Special Minority Initiatives, National Institutes of Health, HHS).

Dated: July 8, 2014.

Melanie J. Gray,

Program Analyst, Office of Federal Advisory Committee Policy.

[FR Doc. 2014–16263 Filed 7–10–14; 8:45 am]

BILLING CODE 4140–01–P

DEPARTMENT OF HEALTH AND HUMAN SERVICES

National Institutes of Health

National Institute of General Medical Sciences; Notice of Closed Meeting

Pursuant to section 10(d) of the Federal Advisory Committee Act, as amended (5 U.S.C. App.), notice is hereby given of the following meeting.

The meeting will be closed to the public in accordance with the provisions set forth in sections 552b(c)(4) and 552b(c)(6), Title 5 U.S.C., as amended. The grant applications and the discussions could disclose confidential trade secrets or commercial property such as patentable material, and personal information concerning individuals associated with the grant applications, the disclosure of which would constitute a clearly unwarranted invasion of personal privacy.

Name of Committee: National Institute of General Medical Sciences Special Emphasis Panel; Review of TWD–8 (SC) Grant Applications.

Date: July 14, 2014.

Time: 1:00 p.m. to 4:00 p.m.

Agenda: To review and evaluate grant applications.

Place: National Institutes of Health, Natcher Building, 45 Center Drive, Room 3An.18, Bethesda, MD 20892, (Telephone Conference Call).

Contact Person: Rebecca H. Johnson, Ph.D., Scientific Review Officer, Office of Scientific Review, National Institute of General Medical Sciences, National Institutes of Health, 45 Center Drive, Room 3An.18C, Bethesda, MD 20892, 301–594–2771, *JohnsoRe@nigms.nih.gov.*

This notice is being published less than15 days prior to the meeting due to the timing limitations imposed by the review and funding cycle.

(Catalogue of Federal Domestic Assistance Program Nos. 93.375, Minority Biomedical Research Support; 93.821, Cell Biology and Biophysics Research; 93.859, Pharmacology, Physiology, and Biological Chemistry Research; 93.862, Genetics and Developmental Biology Research; 93.88, Minority Access to Research Careers; 93.96, Special Minority Initiatives, National Institutes of Health, HHS).

Dated: *July 8, 2014.*

Melanie J. Gray,

Program Analyst, Office of Federal Advisory Committee Policy.

[FR Doc. 2014–16264 Filed 7–10–14; 8:45 am]

BILLING CODE 4140–01–P

DEPARTMENT OF HEALTH AND HUMAN SERVICES

National Institutes of Health

National Institute of General Medical Sciences; Amended Notice of Meeting

Notice is hereby given of a change in the meeting of the National Institute of General Medical Sciences Special Emphasis Panel, July 10, 2014, 1:00 p.m. to July 10, 2014, 4:00 p.m., National Institutes of Health, Natcher Building, 45 Center Drive, Room 3An.18, Bethesda, MD 20892, which was published in the **Federal Register** on June 16, 2014, 79 FR 34329.

The meeting date has been changed to July 25, 2014 from 1:00 p.m. to 4:00 p.m. The meeting location remains the same. The meeting is closed to the public.

Dated: July 8, 2014.

Melanie J. Gray,

Program Analyst, Office of Federal Advisory Committee Policy.

[FR Doc. 2014–16261 Filed 7–10–14; 8:45 am]

BILLING CODE 4140–01–P

DEPARTMENT OF HOMELAND SECURITY

Customs and Border Protection

Notice of Cancellation of Customs Broker Licenses Due to Death of the License Holder

AGENCY: U.S. Customs and Border Protection, Department of Homeland Security.

ACTION: Customs broker license cancellation due to death of the broker.

SUMMARY: Notice is hereby given that the customs broker license of certain brokers have been canceled without prejudice due to the death of the license holders.

SUPPLEMENTARY INFORMATION: Notice is hereby given that, pursuant to section 641 of the Tariff Act of 1930, as amended (19 U.S.C. 1641), and section 111.51(a) of title 19 of the Code of Federal Regulations (19 CFR 111.51(a)), the following customs broker licenses and any and all associated permits have been canceled without prejudice due to the death of the broker.

Last/company name	First name	License No.	Port of issuance
Nistal	Salvador	04329	Miami.
Flower	Gary	06664	Norfolk.
Garcia	Luis	15330	San Juan.

Dated: June 23, 2014.

Richard F. DiNucci,

Acting Assistant Commissioner, Office of International Trade.

[FR Doc. 2014–16209 Filed 7–10–14; 8:45 am]

BILLING CODE 9111–14–P

DEPARTMENT OF HOMELAND SECURITY

Office of the Secretary

[Docket No. DHS–2014–0035]

Privacy Act of 1974; Department of Homeland Security Federal Emergency Management Agency—012 Suspicious Activity Reporting System of Records

AGENCY: Privacy Office, Department of Homeland Security.

ACTION: Notice of Privacy Act System of Records.

SUMMARY: In accordance with the Privacy Act of 1974, the Department of Homeland Security proposes to update and reissue a current system of records titled, ''Department of Homeland Security/Federal Emergency Management Agency—012 Suspicious Activity Reporting System of Records.'' This system of records allows the Department of Homeland Security/Federal Emergency Management Agency to collect and maintain records on individuals who report suspicious activities, individuals reported as being involved in suspicious activities, and individuals charged with the analysis and appropriate handling of suspicious activity reports. As a result of the biennial review, the Federal Emergency Management Agency has made non-substantive changes to simplify the formatting and text of the previously published notice. This updated system will be included in the Department of Homeland Security's inventory of record systems.

DATES: Submit comments on or before August 11, 2014. This updated system will be effective August 11, 2014.

ADDRESSES: You may submit comments, identified by docket number DHS–2014–0035 by one of the following methods:

- Federal e-Rulemaking Portal: *http://www.regulations.gov*. Follow the instructions for submitting comments.
- Fax: 202–343–4010.
- Mail: Karen L. Neuman, Chief Privacy Officer, Privacy Office, Department of Homeland Security, 245 Murray Drive SW., Building 410, STOP–0655, Washington, DC 20528.
- Instructions: All submissions received must include the agency name and docket number for this rulemaking. All comments received will be posted without change to *http://www.regulations.gov*, including any personal information provided.
- Docket: For access to the docket to read background documents or comments received go to *http://www.regulations.gov*.

FOR FURTHER INFORMATION CONTACT: For general questions please contact: Eric M. Leckey, (202) 212–5100, Privacy Officer, Federal Emergency Management Agency, Department of Homeland Security, Washington, DC 20478. For privacy questions please contact: Karen Neuman (202) 343–1717, Chief Privacy Officer, Privacy Office, Department of Homeland Security, 245 Murray Drive SW., Building 410, STOP–0655, Washington, DC 20528.

SUPPLEMENTARY INFORMATION:

I. Background

In accordance with the Privacy Act of 1974, 5 U.S.C. 552a, the Department of Homeland Security (DHS) Federal Emergency Management Agency (FEMA) proposes to update and reissue a current DHS/FEMA system of records titled, ''DHS/FEMA—012 Suspicious Activity Reporting System of Records.''

FEMA's mission is to ''support our citizens and first responders to ensure that as a nation we work together to build, sustain, and improve our capability to prepare for, protect against, respond to, recover from, and mitigate all hazards.'' FEMA collects, maintains, and retrieves records of individuals who report suspicious activities, individuals reported as being involved in suspicious activities, and individuals charged with the analysis and appropriate handling of suspicious activity reports. FEMA's Office of the Chief Security Officer (OCSO), Fraud and Investigations Unit manages this process. FEMA Suspicious Activity Reports (SAR) are secured in a room monitored by FEMA OCSO special agents and analysts to reduce any risk of unauthorized access.

FEMA SARs may be shared with federal, state, local, and tribal jurisdictions that have the responsibility of investigating suspicious activities within their jurisdictions. FEMA SARs that do not have a nexus to terrorism or hazards to homeland security, (as determined by FEMA OCSO special agents or analysts) are forwarded to the appropriate jurisdiction (such as sheriff offices, county/city police, and state police). FEMA SARs that have a nexus to terrorism or hazards to homeland security, (as determined by FEMA OCSO special agents or analysts), are shared with the Federal Bureau of Investigation (FBI) Joint Terrorism Task Force (JTTF), Federal Protective Service, and/or other federal agencies that are required to investigate and respond to terrorist threats or hazards to homeland security.

As a result of the biennial review, FEMA has made non-substantive changes to simplify the formatting and text of the previously published notice. FEMA's SAR process is authorized and governed by 44 CFR Chapter 2 ''Delegation of Authority;'' 42 U.S.C. 5196(d); Executive Order No. 12333 and 13388; 40 U.S.C. 1315(b)(2)(F); 6 U.S.C. 314 of the Homeland Security Act of 2002, as amended; the Intelligence Reform and Terrorism Prevention Act of 2004, as amended; the National Security Act of 1947, as amended; and FEMA Manual 1010–1 ''Federal Emergency Management Agency Missions and Functions.''

Consistent with DHS's information sharing mission, information stored in the DHS/FEMA–012 Suspicious Activity Reporting System of Records may be shared with other DHS components that have a need to know the information to carry out their national security, law enforcement, immigration, intelligence, or other homeland security functions. In addition, information may be shared with appropriate federal, state, local, tribal, territorial, foreign, or international government agencies consistent with the routine uses set forth in this system of records notice.

This updated system will be included in DHS's inventory of record systems.

II. Privacy Act

The Privacy Act embodies fair information practice principles in a statutory framework governing the means by which the U.S. government collects, maintains, uses, and disseminates individuals' records. The Privacy Act applies to information that is maintained in a ''system of records.'' A ''system of records'' is a group of any records under the control of an agency from which information is retrieved by the name of an individual or by some identifying number, symbol, or other identifying particular assigned to the individual. In the Privacy Act, an individual is defined to encompass U.S. citizens and lawful permanent residents. As a matter of policy, DHS extends administrative Privacy Act protections to all individuals when systems of records maintain information on U.S. citizens, lawful permanent residents, and visitors.

Below is the description of the DHS/FEMA–12 Suspicious Activity Reporting System of Records.

In accordance with 5 U.S.C. 552a(r), DHS has provided a report of this system of records to the Office of Management and Budget and to Congress.

System of Records

Department of Homeland Security (DHS)/Federal Emergency Management Agency (FEMA)–012

SYSTEM NAME:

DHS FEMA–012 Suspicious Activity Reporting.

SECURITY CLASSIFICATION:

For official use only (FOUO) and law enforcement sensitive (LES).

SYSTEM LOCATION:

FEMA maintains records at FEMA Headquarters in Washington, DC, and in field offices.

CATEGORIES OF INDIVIDUALS COVERED BY THE SYSTEM:

Categories of individuals includes individuals who report suspicious activities, individuals reported as being involved in suspicious activities, and individuals charged with the analysis and appropriate handling of suspicious activity reports.

CATEGORIES OF RECORDS IN THE SYSTEM:

- Case/incident number;
- Name (first, middle, and last);
- Address (number, street, apartment, city, and state);
- Age;
- Sex;
- Race;
- Signature (investigator, analyst, or law enforcement officer (LEO));
- Jurisdiction;
- Injury code (if applicable);
- Telephone numbers (home, business, or cell);
- Other contact information (e.g., email address); and
- Property information (name, quantity, serial number, brand name, model, value, year, make, color, identifying characteristics, and/or registration information).

AUTHORITY FOR MAINTENANCE OF THE SYSTEM:

44 CFR Chapter 2 ''Delegation of Authority;'' 42 U.S.C. 5196(d); Executive Order No. 12333 and 13388; 40 U.S.C. 1315(b)(2)(F); 6 U.S.C. 314 of the Homeland Security Act of 2002, as amended; the Intelligence Reform and Terrorism Prevention Act of 2004, as amended; the National Security Act of 1947, as amended; and FEMA Manual 1010–1 ''Federal Emergency Management Agency Missions and Functions.''

PURPOSE(S):

The purpose of this system is to collect, investigate, analyze, and report suspicious activities to the Federal Bureau of Investigations (FBI) Joint Terrorism Task Force (JTTF), Federal Protective Service, and/or other federal, state, or local agencies required to investigate and respond to terrorist threats or hazards to homeland security.

ROUTINE USES OF RECORDS MAINTAINED IN THE SYSTEM, INCLUDING CATEGORIES OF USERS AND THE PURPOSES OF SUCH USES:

In addition to those disclosures generally permitted under 5 U.S.C. 552a(b) of the Privacy Act, all or a portion of the records or information contained in this system may be disclosed outside DHS as a routine use pursuant to 5 U.S.C. 552a(b)(3) as follows:

A. To the Department of Justice (DOJ), including Offices of the U.S. Attorneys, or to another federal agency conducting litigation or in proceedings before any court, adjudicative, or administrative body, when it is necessary to the litigation and one of the following is a party to the litigation or has an interest in such litigation:

1. DHS or any component thereof;

2. Any employee or former employee of DHS in his/her official capacity;

3. Any employee or former employee of DHS in his/her individual capacity when DOJ or DHS has agreed to represent the employee; or

4. The U.S. or any agency thereof.

B. To a congressional office from the record of an individual in response to an inquiry from that congressional office made at the request of the individual to whom the record pertains.

C. To the National Archives and Records Administration (NARA) or General Services Administration pursuant to records management inspections being conducted under the authority of 44 U.S.C. 2904 and 2906.

D. To an agency, organization, or individual for the purpose of performing audit or oversight operations as authorized by law, but only such information as is necessary and relevant to such audit or oversight function.

E. To appropriate agencies, entities, and persons when:

1. DHS suspects or has confirmed that the security or confidentiality of information in the system of records has been compromised;

2. DHS has determined that as a result of the suspected or confirmed compromise, there is a risk of identity theft or fraud, harm to economic or property interests, harm to an individual, or harm to the security or integrity of this system or other systems or programs (whether maintained by DHS or another agency or entity) that rely upon the compromised information; and

3. The disclosure made to such agencies, entities, and persons is reasonably necessary to assist in connection with DHS's efforts to respond to the suspected or confirmed compromise and prevent, minimize, or remedy such harm.

F. To contractors and their agents, grantees, experts, consultants, and others performing or working on a contract, service, grant, cooperative agreement, or other assignment for DHS, when necessary to accomplish an agency function related to this system of records. Individuals provided information under this routine use are subject to the same Privacy Act requirements and limitations on disclosure as are applicable to DHS officers and employees.

G. To an appropriate federal, state, tribal, local, international, or foreign law enforcement agency or other appropriate authority charged with investigating or prosecuting a violation or enforcing or implementing a law, rule, regulation, or order, when a record, either on its face or in conjunction with other information, indicates a violation or potential violation of law, which includes criminal, civil, or regulatory violations and such disclosure is proper and consistent with the official duties of the person making the disclosure.

H. To an appropriate federal, state, tribal, local, international counterterrorism agencies when DHS becomes aware of an indication of a threat or potential threat to security, and when such use is to assist in counterterrorism efforts.

I. To an organization or individual in either the public or private sector, either foreign or domestic, when there is a reason to believe that the recipient is or could become the target of a particular terrorist activity or conspiracy, to the extent the information is relevant to the protection of life, property, or other vital interests of a data subject and disclosure is proper and consistent with the official duties of the person making the disclosure.

J. To the news media and the public, with the approval of the Chief Privacy Officer in consultation with counsel, when there exists a legitimate public interest in the disclosure of the information, when disclosure is necessary to preserve confidence in the integrity of DHS, or is necessary to demonstrate the accountability of DHS's officers, employees, or individuals covered by the system, except to the extent it is determined that release of

the specific information in the context of a particular case would constitute an unwarranted invasion of personal privacy.

DISCLOSURE TO CONSUMER REPORTING AGENCIES:

None.

POLICIES AND PRACTICES FOR STORING, RETRIEVING, ACCESSING, RETAINING, AND DISPOSING OF RECORDS IN THE SYSTEM:

STORAGE:

FEMA stores records in this system electronically or on paper in secure facilities in a locked drawer behind a locked door. The records are stored on magnetic disc, tape, and digital media.

RETRIEVABILITY:

FEMA retrieves records by case/incident number, name, address, and/or date.

SAFEGUARDS:

FEMA safeguareds records in this system in accordance with applicable rules and policies, including all applicable DHS automated systems security and access policies. FEMA imposes strict controls to minimize the risk of compromising the information that is being stored. FEMA limits access to the computer system containing the records to those individuals who have a need to know the information for the performance of their official duties and who have appropriate clearances or permissions.

RETENTION AND DISPOSAL:

Pursuant to National Archives and Records Administration (NARA) Schedule Number N1–311–99–6, Items 1, 2, and 3, files containing information or allegations that are of an investigative nature but do not relate to a specific investigation are destroyed when five years old. Investigative case files that involve allegations made against senior agency officials, attract significant attention in the media, attract congressional attention, result in substantive changes in agency policies and procedures, or are cited in the Office of the Investigator General (OIG)'s periodic reports to Congress are cut off when the case is closed, retired to the Federal Records Center (FRC) five years after cutoff, and then transferred to NARA 20 years after cutoff. All other investigative case files are placed in inactive files when case is closed, cut off at the end of fiscal year, and destroyed 10 years after cutoff, except those that are unusually significant for documenting major violations of criminal law or ethical standards by agency officials or others.

SYSTEM MANAGER AND ADDRESS:

Office of the Chief Security Officer, Fraud and Investigation Unit, 1201 Maryland Avenue SW, Washington, DC 20024.

NOTIFICATION PROCEDURE:

The Secretary of Homeland Security has exempted this system from the notification, access, and amendment procedures of the Privacy Act because it is a law enforcement system. However, DHS/FEMA will consider individual requests to determine whether or not information may be released. Thus, individuals seeking notification of and access to any record contained in this system of records, or seeking to contest its content, may submit a request in writing to the Chief of the FEMA Disclosure Branch whose contact information can be found at *http://www.dhs.gov/foia* under ''contacts.'' If an individual believes more than one component maintains Privacy Act records concerning him or her, the individual may submit the request to the Chief Privacy Officer and Chief Freedom of Information Act Officer, Department of Homeland Security, 245 Murray Drive SW., Building 410, STOP–0655, Washington, DC 20528.

When seeking records about yourself from this system of records or any other Departmental system of records your request must conform with the Privacy Act regulations set forth in 6 CFR Part 5. You must first verify your identity, meaning that you must provide your full name, current address and date and place of birth. You must sign your request, and your signature must either be notarized or submitted under 28 U.S.C. 1746, a law that permits statements to be made under penalty of perjury as a substitute for notarization. While no specific form is required, you may obtain forms for this purpose from the Chief Privacy Officer and Chief Freedom of Information Act Officer, *http://www.dhs.gov/foia* or 1–866–431–0486. In addition you should:

- Explain why you believe the Department would have information on you;
- Identify which component(s) of the Department you believe may have the information about you;
- Specify when you believe the records would have been created; and
- Provide any other information that will help the FOIA staff determine which DHS component agency may have responsive records.

If your request is seeking records pertaining to another living individual, you must include a statement from that individual certifying his/her agreement for you to access his/her records.

Without this bulleted information the component(s) may not be able to conduct an effective search, and your request may be denied due to lack of specificity or lack of compliance with applicable regulations.

RECORD ACCESS PROCEDURES:

See ''Notification procedure'' above.

CONTESTING RECORD PROCEDURES:

See ''Notification procedure'' above.

RECORD SOURCE CATEGORIES:

Records are obtained from individuals who report suspicious activities, individuals reported as being involved in suspicious activities, and individuals charged with the analysis and appropriate handling of suspicious activity reports, commercially available systems, and also from other federal, state, and local law enforcement agencies.

EXEMPTIONS CLAIMED FOR THE SYSTEM:

The Secretary of Homeland Security has exempted this system from the following provisions of the Privacy Act, subject to the limitation set forth in 5 U.S.C. 552a(c)(3); (d); (e)(1), (e)(4)(G), (e)(4)(H), (e)(4)(I); and (f) pursuant to 5 U.S.C. 552a (k)(2).

Dated: June 24, 2014.

Karen L. Neuman,

Chief Privacy Officer, Department of Homeland Security.

[FR Doc. 2014–16112 Filed 7–10–14; 8:45 am]

BILLING CODE 9110–17–P

DEPARTMENT OF HOMELAND SECURITY

Coast Guard

[Docket No. USCG–2014–0543]

Great Lakes Pilotage Advisory Committee; Notice of a Meeting

AGENCY: Coast Guard, DHS.

ACTION: Committee Management; Notice of Federal Advisory Committee Meeting; Correction

SUMMARY: The Coast Guard published a meeting notice for the Great Lakes Pilotage Advisory Committee in the **Federal Register** of July 7, 2014. The notice contained incorrect information under **ADDRESSES** and **SUPPLEMENTARY INFORMATION**—Agenda.

FOR FURTHER INFORMATION CONTACT: Ms. Michelle Birchfield, telephone 202–372–1537, fax 202–372–8387, or email at *Michelle.R.Birchfield@uscg.mil.*

Correction

In the **Federal Register** of July 7, 2014, in FR Doc. 2014–15790, on page

38324, in the first column, fourth line, correct the reference to ''[USCG–2014–9110]'' to read ''[USCG–2014–0543]; and on the same page, in the second column, ninth line from the bottom, correct ''raining'' to read ''training.''

Dated: July 8, 2014.

Katia Cervoni,

Chief, Office of Regulations and Administrative Law. U. S. Coast Guard.

[FR Doc. 2014–16262 Filed 7–10–14; 8:45 am]

BILLING CODE 9110–04–P

DEPARTMENT OF HOMELAND SECURITY

U.S. Customs and Border Protection

[1651–0078]

Agency Information Collection Activities: Automated Clearinghouse

AGENCY: U.S. Customs and Border Protection, Department of Homeland Security.

ACTION: 30-day notice and request for comments; extension of an existing collection of information.

SUMMARY: U.S. Customs and Border Protection (CBP) of the Department of Homeland Security will be submitting the following information collection request to the Office of Management and Budget (OMB) for review and approval in accordance with the Paperwork Reduction Act: Automated Clearinghouse. This is a proposed extension of an information collection that was previously approved. CBP is proposing that this information collection be extended with no change to the burden hours or to the information collected. This document is published to obtain comments from the public and affected agencies.

DATES: Written comments should be received on or before August 11, 2014 to be assured of consideration.

ADDRESSES: Interested persons are invited to submit written comments on this proposed information collection to the Office of Information and Regulatory Affairs, Office of Management and Budget. Comments should be addressed to the OMB Desk Officer for Customs and Border Protection, Department of Homeland Security, and sent via electronic mail to *oira_submission@omb.eop.gov* or faxed to (202) 395–5806.

FOR FURTHER INFORMATION CONTACT: Requests for additional information should be directed to Tracey Denning, U.S. Customs and Border Protection, Regulations and Rulings, Office of International Trade, 90 K Street NE., 10th Floor, Washington, DC 20229–1177, at 202–325–0265.

SUPPLEMENTARY INFORMATION: This proposed information collection was previously published in the **Federal Register** (79 FR 26445) on May 8, 2014, allowing for a 60-day comment period. This notice allows for an additional 30 days for public comments. This process is conducted in accordance with 5 CFR 1320.10. CBP invites the general public and other Federal agencies to comment on proposed and/or continuing information collections pursuant to the Paperwork Reduction Act of 1995 (Pub. L. 104–13; 44 U.S.C. 3507). The comments should address: (a) Whether the collection of information is necessary for the proper performance of the functions of the agency, including whether the information shall have practical utility; (b) the accuracy of the agency's estimates of the burden of the collection of information; (c) ways to enhance the quality, utility, and clarity of the information to be collected; (d) ways to minimize the burden, including the use of automated collection techniques or the use of other forms of information technology; and (e) the annual costs to respondents or record keepers from the collection of information (total capital/startup costs and operations and maintenance costs). The comments that are submitted will be summarized and included in the CBP request for OMB approval. All comments will become a matter of public record. In this document, CBP is soliciting comments concerning the following information collection:

Title: Automated Clearinghouse.

OMB Number: 1651–0078.

Form Number: CBP Form 400.

Abstract: The Automated Clearinghouse (ACH) allows participants in the Automated Broker Interface (ABI) to transmit daily statements, deferred tax, and bill payments electronically through a financial institution directly to a CBP account. ACH debit allows the payer to exercise more control over the payment process. In order to participate in ACH debit, companies must complete CBP Form 400, *ACH Application.* Participants also use this form to notify CBP of changes to bank information or contact information. The ACH procedure is authorized by 19 U.S.C. 1202, and provided for by 19 CFR 24.25. CBP Form 400 is accessible at *http://www.cbp.gov/sites/default/files/documents/CBP%20Form%20400.pdf*

Current Actions: CBP proposes to extend the expiration date of this information collection with no change to the burden hours or to the information collected.

Type of Review: Extension (without change).

Affected Public: Businesses.

Estimated Number of Respondents: 1,443.

Estimated Number of Annual Responses per Respondent: 2.

Estimated Number of Total Annual Responses: 2,886.

Estimated Time per Response: 5 minutes.

Estimated Total Annual Burden Hours: 240.

Dated: July 7, 2014.

Tracey Denning,

Agency Clearance Officer, U.S. Customs and Border Protection.

[FR Doc. 2014–16181 Filed 7–10–14; 8:45 am]

BILLING CODE 9111–14–P

DEPARTMENT OF HOMELAND SECURITY

U.S. Customs and Border Protection

[1651–0027]

Agency Information Collection Activities: Record of Vessel Foreign Repair or Equipment Purchase

AGENCY: U.S. Customs and Border Protection, Department of Homeland Security.

ACTION: 30-day notice and request for comments; extension of an existing collection of information.

SUMMARY: U.S. Customs and Border Protection (CBP) of the Department of Homeland Security will be submitting the following information collection request to the Office of Management and Budget (OMB) for review and approval in accordance with the Paperwork Reduction Act: Record of Vessel Foreign Repair or Equipment Purchase (CBP Form 226). This is a proposed extension of an information collection that was previously approved. CBP is proposing that this information collection be extended with no change to the burden hours or to the information collected. This document is published to obtain comments from the public and affected agencies.

DATES: Written comments should be received on or before August 11, 2014 to be assured of consideration.

ADDRESSES: Interested persons are invited to submit written comments on this proposed information collection to the Office of Information and Regulatory Affairs, Office of Management and Budget. Comments should be addressed to the OMB Desk Officer for Customs and Border Protection, Department of Homeland Security, and sent via

electronic mail to *oira_submission@omb.eop.gov* or faxed to (202) 395–5806.

FOR FURTHER INFORMATION CONTACT: Requests for additional information should be directed to Tracey Denning, U.S. Customs and Border Protection, Regulations and Rulings, Office of International Trade, 90 K Street, NE., 10th Floor, Washington, DC 20229–1177, at 202–325–0265.

SUPPLEMENTARY INFORMATION: This proposed information collection was previously published in the **Federal Register** (79 FR 22519) on April 22, 2014, allowing for a 60-day comment period. This notice allows for an additional 30 days for public comments. This process is conducted in accordance with 5 CFR 1320.10. CBP invites the general public and other Federal agencies to comment on proposed and/or continuing information collections pursuant to the Paperwork Reduction Act of 1995 (Pub. L. 104–13; 44 U.S.C. 3507). The comments should address: (a) Whether the collection of information is necessary for the proper performance of the functions of the agency, including whether the information shall have practical utility; (b) the accuracy of the agency's estimates of the burden of the collection of information; (c) ways to enhance the quality, utility, and clarity of the information to be collected; (d) ways to minimize the burden, including the use of automated collection techniques or the use of other forms of information technology; and (e) the annual costs to respondents or record keepers from the collection of information (total capital/startup costs and operations and maintenance costs). The comments that are submitted will be summarized and included in the CBP request for OMB approval. All comments will become a matter of public record. In this document, CBP is soliciting comments concerning the following information collection:

Title: Record of Vessel Foreign Repair or Equipment Purchase.

OMB Number: 1651–0027.

Form Number: CBP Form 226.

Abstract: 19 U.S.C. 1466(a) provides for a 50 percent *ad valorem* duty assessed on a vessel master or owner for any repairs, purchases, or expenses incurred in a foreign country by a commercial vessel registered in the United States. CBP Form 226, Record of Vessel Foreign Repair or Equipment Purchase, is used by the master or owner of a vessel to declare and file entry on equipment, repairs, parts, or materials purchased for the vessel in a foreign country. This information enables CBP to assess duties on these foreign repairs, parts, or materials. CBP Form 226 is provided for by 19 CFR 4.7 and 4.14 and is accessible at: *http://www.cbp.gov/sites/default/files/documents/CBP%20Form%20226.pdf.*

Current Actions: This submission is being made to extend the expiration date with no change to the burden hours or to the information collected on Form 226.

Type of Review: Extension (without change).

Affected Public: Businesses.

Estimated Number of Respondents: 100.

Estimated Number of Responses per Respondent: 11.

Estimated Number of Total Annual Responses: 1,100.

Estimated Time per Response: 45 minutes.

Estimated Total Annual Burden Hours: 825.

Dated: July 7, 2014.

Tracey Denning,

Agency Clearance Officer, U.S. Customs and Border Protection.

[FR Doc. 2014–16183 Filed 7–10–14; 8:45 am]

BILLING CODE 9111–14–P

DEPARTMENT OF HOMELAND SECURITY

U.S. Customs and Border Protection

[1651–0098]

Agency Information Collection Activities:

NAFTA Regulations and Certificate of Origin

AGENCY: U.S. Customs and Border Protection, Department of Homeland Security.

ACTION: 30-day notice and request for comments; extension of an existing collection of information.

SUMMARY: U.S. Customs and Border Protection (CBP) of the Department of Homeland Security will be submitting the following information collection request to the Office of Management and Budget (OMB) for review and approval in accordance with the Paperwork Reduction Act: NAFTA Regulations and Certificate of Origin. This is a proposed extension of an information collection that was previously approved. CBP is proposing that this information collection be extended with no change to the burden hours or to the information collected. This document is published to obtain comments from the public and affected agencies.

DATES: Written comments should be received on or before August 11, 2014 to be assured of consideration.

ADDRESSES: Interested persons are invited to submit written comments on this proposed information collection to the Office of Information and Regulatory Affairs, Office of Management and Budget. Comments should be addressed to the OMB Desk Officer for Customs and Border Protection, Department of Homeland Security, and sent via electronic mail to *oira_submission@omb.eop.gov* or faxed to (202) 395–5806.

FOR FURTHER INFORMATION CONTACT: Requests for additional information should be directed to Tracey Denning, U.S. Customs and Border Protection, Regulations and Rulings, Office of International Trade, 90 K Street, NE., 10th Floor, Washington, DC 20229–1177, at 202–325–0265.

SUPPLEMENTARY INFORMATION: This proposed information collection was previously published in the **Federal Register** (79 FR 28532) on May 16, 2014, allowing for a 60-day comment period. This notice allows for an additional 30 days for public comments. This process is conducted in accordance with 5 CFR 1320.10. CBP invites the general public and other Federal agencies to comment on proposed and/or continuing information collections pursuant to the Paperwork Reduction Act of 1995 (Pub. L. 104–13; 44 U.S.C. 3507). The comments should address: (a) Whether the collection of information is necessary for the proper performance of the functions of the agency, including whether the information shall have practical utility; (b) the accuracy of the agency's estimates of the burden of the collection of information; (c) ways to enhance the quality, utility, and clarity of the information to be collected; (d) ways to minimize the burden, including the use of automated collection techniques or the use of other forms of information technology; and (e) the annual costs to respondents or record keepers from the collection of information (total capital/startup costs and operations and maintenance costs). The comments that are submitted will be summarized and included in the CBP request for OMB approval. All comments will become a matter of public record. In this document, CBP is soliciting comments concerning the following information collection:

Title: NAFTA Regulations and Certificate of Origin.

OMB Number: 1651–0098.

Form Number: CBP Forms 434, 446, and 447.

Abstract: On December 17, 1992, the U.S., Mexico and Canada entered into an agreement, ''The North American Free Trade Agreement'' (NAFTA). The provisions of NAFTA were adopted by

the U.S. with the enactment of the North American Free Trade Agreement Implementation Act of 1993 (PL. 103–182).

CBP Form 434, *North American Free Trade Certificate of Origin,* is used to certify that a good being exported either from the United States into Canada or Mexico or from Canada or Mexico into the United States qualifies as an originating good for purposes of preferential tariff treatment under NAFTA. This form is completed by exporters and/or producers and furnished to CBP upon request. CBP Form 434 is provided for by 19 CFR 181.11 and is accessible at: *http://www.cbp.gov/sites/default/files/documents/CBP%20Form%20434.pdf.*

CBP Form 446, *NAFTA Verification of Origin Questionnaire,* is a questionnaire that CBP personnel use to gather sufficient information from exporters and/or producers to determine whether goods imported into the United States qualify as originating goods for the purposes of preferential tariff treatment under NAFTA. CBP Form 446 is provided for by 19 CFR 181.72 and is accessible at: *http://www.cbp.gov/sites/default/files/documents/CBP%20Form%20446.pdf.*

CBP Form 447, *North American Free Trade Agreement Motor Vehicle Averaging Election,* is used to gather information required by 19 CFR 181 Appendix, Section 11, (2) ''Information Required When Producer Chooses to Average for Motor Vehicles''. This form is provided to CBP when a manufacturer chooses to average motor vehicles for the purpose of obtaining NAFTA preference. CBP Form 447 is accessible at: *http://www.cbp.gov/sites/default/files/documents/CBP%20Form%20447.pdf.*

Current Actions: This submission is being made to extend the expiration date for CBP Forms 434, 446, and 447.

Type of Review: Extension (without change).

Affected Public: Businesses.

Form 434, NAFTA Certificate of Origin:

Estimated Number of Respondents: 40,000.

Estimated Number of Responses per Respondent: 3.

Estimated Time per Response: 15 minutes.

Estimated Total Annual Burden Hours: 30,000.

Form 446, NAFTA Questionnaire:

Estimated Number of Respondents: 400.

Estimated Number of Responses per Respondent: 1.

Estimated Time per Response: 45 minutes.

Estimated Total Annual Burden Hours: 300.

Form 447, NAFTA Motor Vehicle Averaging Election:

Estimated Number of Respondents: 11.

Estimated Number of Responses per Respondent: 1.28.

Estimated Time per Response: 1 hour.

Estimated Total Annual Burden Hours: 14.

Dated: July 7, 2014.

Tracey Denning,

Agency Clearance Officer, U.S. Customs and Border Protection.

[FR Doc. 2014–16185 Filed 7–10–14; 8:45 am]

BILLING CODE 9111–14–P

DEPARTMENT OF HOUSING AND URBAN DEVELOPMENT

[Docket No. FR–5756–N–26]

Notice of Proposed Information Collection: Comment Request Annual Adjustment Factors (AAF) Rent Increase Requirement

AGENCY: Office of the Assistant Secretary for Housing, HUD.

ACTION: Notice.

SUMMARY: The proposed information collection requirement described below will be submitted to the Office of Management and Budget (OMB) for review, as required by the Paperwork Reduction Act. The Department is soliciting public comments on the subject proposal.

DATES: *Comments Due Date: September 9, 2014.*

ADDRESSES: Interested persons are invited to submit comments regarding this proposal. Comments should refer to the proposal by name and/or OMB Control Number and should be sent to: Reports Liaison Officer, Department of Housing and Urban Development, 451 7th Street SW., Washington, DC 20410, Room 9120 or the number for the Federal Information Relay Service (1–800–877–8339).

FOR FURTHER INFORMATION CONTACT: Catherine Brennan, Director, Office of Housing Assistance & Grant Administration, Department of Housing and Urban Development, 451 7th Street SW., Washington, DC 20410, telephone (202) 708–3000 (this is not a toll free number) for copies of the proposed forms and other available information.

SUPPLEMENTARY INFORMATION: The Department is submitting the proposed information collection to OMB for review, as required by the Paperwork Reduction Act of 1995 (44 U.S.C. Chapter 35, as amended).

This Notice is soliciting comments from members of the public and affected agencies concerning the proposed collection of information to: (1) Evaluate whether the proposed collection is necessary for the proper performance of the functions of the agency, including whether the information will have practical utility; (2) Evaluate the accuracy of the agency's estimate of the burden of the proposed collection of information; (3) Enhance the quality, utility, and clarity of the information to be collected; and (4) Minimize the burden of the collection of information on those who are to respond; including the use of appropriate automated collection techniques or other forms of information technology, e.g., permitting electronic submission of responses.

A. Overview of Information Collection

Title of Information Collection: Annual Adjustment Factors (AAF) Rent Increase Requirement .

OMB Approval Number: 2502–0507.

Type of Request: Extension of a currently approved collection.

Form Number: HUD–92273–S8.

Description of the need for the information and proposed use: Owners of project-based section 8 contracts that utilize the AAF as the method of rent adjustment provide this information which is necessary to determine whether or not the subject properties' rents are to be adjusted and, if so, the amount of the adjustment.

Respondents: Business, Not for profit institutions.

Estimated Number of Respondents: 4,287.

Estimated Number of Responses: 612.

Frequency of Response: On occasion.

Average Hours per Response: 1.5 Hours.

Total Estimated Burdens: 918.

B. Solicitation of Public Comment

This notice is soliciting comments from members of the public and affected parties concerning the collection of information described in Section A on the following:

(1) Whether the proposed collection of information is necessary for the proper performance of the functions of the agency, including whether the information will have practical utility;

(2) The accuracy of the agency's estimate of the burden of the proposed collection of information;

(3) Ways to enhance the quality, utility, and clarity of the information to be collected; and

(4) Ways to minimize the burden of the collection of information on those who are to respond; including through the use of appropriate automated

collection techniques or other forms of information technology, e.g., permitting electronic submission of responses.

HUD encourages interested parties to submit comment in response to these questions.

Authority: Section 3507 of the Paperwork Reduction Act of 1995, 44 U.S.C. Chapter 35.

Dated: July 7, 2014.

Laura M. Marin,

Associate General Deputy Assistant Secretary for Housing-Associate Deputy Federal Housing Commissioner.

[FR Doc. 2014–16282 Filed 7–10–14; 8:45 am]

BILLING CODE 4210–67–P

DEPARTMENT OF HOUSING AND URBAN DEVELOPMENT

[Docket No. FR–5758–N–08]

60-Day Notice of Proposed Information Collection: Energy Evaluation of Public Housing Capital Fund (PHCF), Category 4, Option 2 Grantees

AGENCY: Office of Policy Development and Research, HUD.

ACTION: Notice.

SUMMARY: HUD is seeking approval from the Office of Management and Budget (OMB) for the information collection described below. In accordance with the Paperwork Reduction Act, HUD is requesting comment from all interested parties on the proposed collection of information. The purpose of this notice is to allow for 60 days of public comment.

DATES: *Comments Due Date:* September 9, 2014.

ADDRESSES: Interested persons are invited to submit comments regarding this proposal. Comments should refer to the proposal by name and/or OMB Control Number and should be sent to: Colette Pollard, Reports Management Officer, QDAM, Department of Housing and Urban Development, 451 7th Street SW., Room 4176, Washington, DC 20410–5000; telephone 202–402–3400 (this is not a toll-free number) or email at *Colette.Pollard@hud.gov* for a copy of the proposed forms or other available information. Persons with hearing or speech impairments may access this number through TTY by calling the toll-free Federal Relay Service at (800) 877–8339.

FOR FURTHER INFORMATION CONTACT: Colette Pollard, Reports Management Officer, QDAM, Department of Housing and Urban Development, 451 7th Street SW., Washington, DC 20410; email Colette Pollard at *Colette.Pollard@hud.gov* or telephone 202–402–3400. This is not a toll-free number. Persons with hearing or speech impairments may access this number through TTY by calling the toll-free Federal Relay Service at (800) 877–8339.

Copies of available documents submitted to OMB may be obtained from Ms. Pollard.

SUPPLEMENTARY INFORMATION: This notice informs the public that HUD is seeking approval from OMB for the information collection described in Section A.

A. Overview of Information Collection

Title of Information Collection: Energy Evaluation of Public Housing Capital Fund (PHCF), Category 4, Option 2 Grantees.

OMB Approval Number: None.

Type of Request: This is a new request.

Form Number: None.

Description of the need for the information and proposed use: The information is being collected to assist in evaluating the short- and long-term performance of the energy retrofits funded by HUD through the American Recovery and Reinvestment Act (ARRA). One component of this overall evaluation project is to evaluate the ARRA PIH Capital Fund Recovery Grants awarded through a competitive process with the purpose of creating energy efficient, green communities (Category 4). In particular, this funding aims to ''substantively increase energy efficiency and environmental performance of public housing properties and thereby reduce energy costs, generate resident and PHA energy consumption savings, reduce Greenhouse Gas emissions attributable to energy consumption and improve indoor air quality to provide a healthy living environment.'' Competitive proposals from eligible PHAs responding to one of two options available were funded under this category: Option 1, Substantial Rehabilitation or New Construction, and Option 2, Moderate Rehabilitation.

Respondents (i.e. affected public): Employees of housing organizations receiving funding from HUD, specifically public housing agencies who received Public Housing Capital Fund, Category 4, Option 2 grants.

Estimated Number of Respondents: 127.

Estimated Number of Responses: 229 (one response per AMP).

Frequency of Response: 1.

Average Hours per Response: 1 (0.5 hrs/utility * 2 utilities/AMP).

Total Estimated Burdens: 229 hrs.

Information collection	Respondents	Number of responses/ instances of collection	Frequency of response	Responses per annum	Avg. time per response (Hr/AMP)	Annual burden hours	Hourly cost per response	Annual cost
Energy Survey	127	229	1	229	1	229	$31	$7,099
Total	127	.....	.....	.....	.....	229	.....	$7,099

B. Solicitation of Public Comment

This notice is soliciting comments from members of the public and affected parties concerning the collection of information described in Section A on the following:

(1) Whether the proposed collection of information is necessary for the proper performance of the functions of the agency, including whether the information will have practical utility;

(2) The accuracy of the agency's estimate of the burden of the proposed collection of information;

(3) Ways to enhance the quality, utility, and clarity of the information to be collected; and

(4) Ways to minimize the burden of the collection of information on those who are to respond; including through the use of appropriate automated collection techniques or other forms of information technology, e.g., permitting electronic submission of responses.

HUD encourages interested parties to submit comment in response to these questions.

Authority: Section 3507 of the Paperwork Reduction Act of 1995, 44 U.S.C. Chapter 35.

Dated: July 2, 2014.

Katherine M. O'Regan,

Assistant Secretary for Policy Development and Research.

[FR Doc. 2014–16309 Filed 7–10–14; 8:45 am]

BILLING CODE 4210–67–P

DEPARTMENT OF HOUSING AND URBAN DEVELOPMENT

[Docket No. FR–5740–N–02]

Federal Housing Administration (FHA) Multifamily Rental Project Closing Documents: Notice Announcing Approval of Revised Documents

AGENCY: Office of the Assistant Secretary for Housing—Federal Housing Commissioner, HUD.

ACTION: Notice.

SUMMARY: This notice announces that HUD has completed the notice and comment processes required by the Paperwork Reduction Act of the 1995 (PRA), and the Office of Management and Budget (OMB) has reviewed and approved the FHA-insured multifamily rental closing documents (Closing Documents), as revised, under the previously approved control number: 2502–0598. This notice highlights certain of the revisions to the documents that HUD made based on comments submitted in response to the April 1, 2014, 30-day **Federal Register** notice (30-day notice). The final versions of the Closing Documents, including redlines against the documents currently in use, can be viewed on HUD's Web site at: *http://portal.hud.gov/hudportal/HUD?src=/program_offices/housing/mfh/mfhclosingdocuments.* Please note that the documents found at this Web site are for informational purposes only; participants must access the official version of the Closing Documents for FHA multifamily loan closings from HUD's forms resource Web page: *http://www.hud.gov/hudclips.*

FOR FURTHER INFORMATION CONTACT: Millicent Potts, Associate General Counsel for Insured Housing, Office of General Counsel, Department of Housing and Urban Development, 451 7th Street SW., Washington, DC 20310; telephone number (202) 708–1274. This is not a toll-free number. Persons with hearing or speech impairments may access this number through TTY by calling the toll-free Federal Relay Service at (800) 877–8339.

I. Background

On October 29, 2013, and consistent with the Paperwork Reduction Act of 1995, HUD published for public comment, for a period of 60 days, a notice in the **Federal Register** advising that HUD was proposing technical and substantive revisions to the closing documents used in FHA multifamily rental projects based on the experiences of HUD staff working with the documents since 2011(60-day notice). (See 78 FR 64524.) This notice highlighted the proposed changes and advised that redline/strike-out and clean versions of the proposed revisions were available for review on HUD's Web site. On April 1, 2014, HUD published a 30-day notice in the **Federal Register** in accordance with the public comment process required by the PRA. *See* 79 FR 18305. The 30-day notice identified substantive changes that HUD made to the Closing Documents based on public comment submitted in response to the 60-day notice, and responded to significant issues raised by commenters on the Closing Documents. In addition to providing a summary of the changes made, HUD posted on its Web site the redline-strikeout versions of the documents depicting the changes that HUD initially proposed with the 60-day notice as well as clean and redline-strikeout versions with additional changes made in response to public comments received on the 60-day notice, so that industry participants and interested members of the public could see all of the changes that were being proposed to the Closing Documents.

This notice published today announces that HUD has completed the notice and comment processes required by the PRA, and that OMB has completed its review and approved the Closing Documents, as revised, under the previously approved OMB control number 2502–0598.

In response to the 30-day notice, HUD received comments from four (4) commenters. Commenters included the American Bar Association, a law firm, a private attorney, and a local municipality's housing and community investment department. All comments were carefully considered by HUD prior to presentation to OMB for final approval and re-authorization, pursuant to the PRA. In this notice, HUD is highlighting certain of the changes that were made and providing its rationale for not accepting certain comments. The final approved documents are available for your review in clean and redline-strike-out (against the documents currently in use) formats on HUD's Web site at: *http://portal.hud.gov/hudportal/HUD?src=/program_offices/housing/mfh/mfhclosingdocuments*.

II. Effective Date

These revised Closing Documents are required for transactions that receive a firm commitment on or after the date that is 30 calendar days after the date of this notice. As OMB approval for these documents has been received, parties may use these documents on a voluntary basis as of the date of this publication.

III. Discussion of Public Comments and Subsequent Document Revisions

General Comments

Section 50 Name Changes: A commenter noted that when a party named in section 50 of the Regulatory Agreement is changed, but the borrower does not change, the references to the those parties in the Regulatory Agreement, Note, and Security Instrument would all need to be revised. The commenter asked whether HUD would consider incorporating the section 50 parties into the Note and Security Instrument by reference to the Regulatory Agreement. HUD agreed with the comment and has made the necessary change to the documents.

Document Submissions: A commenter requested that HUD allow electronic submission of draft closing documents and final loan documents post-closing on CDs or thumb drives, in lieu of several paper binders, in order to reduce the amount of paper as well as reduce the storage requirements for HUD. The commenter acknowledged that a single paper binder with original signatures could be required, but urged that there should be standardized submission requirements, as much as possible, in all HUD offices, in order to help standardize the process.

With respect to electronic copies of documents, the HUD Office of Chief Information Officer policy allows submission on CD but does not allow submission of materials on thumb drive because of an increased threat of corruption and harm to HUD information systems. With respect to the number of copies and whether by electronic or paper submission, HUD offices will be reevaluating their policy in connection with the current reorganization of the Office of Multifamily Housing.

Identity of Interest: A commenter asked for clarification regarding when an identity of interest exists pursuant to program obligations in Section 26 of the Lender's Certificate and Section 27 of the Request for Endorsement. Specifically, the commenter asked whether a conflict of interest exists when a counsel to the borrower has served as counsel to a lender in other transactions.

HUD does not opine on the ABA Model Rules of Professional Conduct. HUD notes that counsel may not represent Borrower and Lender on the same transaction for a number of reasons, including those which commenter has identified. To the extent commenter questions the applicability of MAP Guide § 2.6 or other HUD requirements, if counsel to a lender or

borrower has appropriately represented a borrower or lender, respectively, on past transactions in accordance with the applicable state's rules of professional responsibility, such prior representation does not make counsel an employee of lender pursuant to the Map Guide or create an identity of interest with borrower or lender.

Note: Commenters have identified confusion with section 9(c) of the note and HUD has taken this opportunity to clarify this section. This section identifies circumstances that shall not be considered prepayments and shall not trigger prepayment premiums.

Regulatory Agreement

A commenter suggested deleting reference to the ''Building Loan Agreement'' in Section 8(b) because this section applies to refinancings with limited repairs where the Building Loan Agreement would be inapplicable. However, certain jurisdictions require the use of this document for repairs, so HUD has declined to make this change.

A commenter requested a change to Section 10(b) with respect to the initial deposit to the reserve for replacement, stating that requiring a specific amount in the Regulatory Agreement for a one-time deposit that occurs at closing is often problematic since the Reserve for Replacement amount can change. HUD agrees and has removed the first sentence of Section 10(b). The initial deposit to the reserve for replacement account should be disclosed, including any applicable transfer amounts, in the closing statement and the Request for Endorsement.

Opinion of Borrower's Counsel and Instructions

One commenter asked HUD to reconsider previously submitted comments to the Opinion of the Borrower's Counsel. The commenter asserts that the comments align with ''customary practice'' and with the practices of Fannie Mae and Freddie Mac, who, the commenter asserts negotiate their model opinion forms. Although HUD looks occasionally to the example of Fannie Mae and Freddie Mac, FHA's role in the housing market, its obligations as the Federal Government and its congressional mandate are distinct. HUD has determined that the requested changes would increase the cost, time and administrative burdens associated with transactions and conflict with HUD's interests in maintaining a uniform practice nationwide and protecting the Federal Government's interests. Thus, HUD declines to make commenter's requested changes.

Escrow Agreement for Working Capital

A commenter noted that the Escrow Agreement for Working Capital improperly references the firm commitment when providing for the allocation of escrow funds for new construction because the MAP Guide sets forth this policy. HUD has determined, however, that the firm commitment does set forth provisions regarding the working capital amount and should be reviewed in connection with the Escrow Agreement for Working Capital. There should not be discrepancies between the firm commitment and other HUD requirements; if participants notice discrepancies in their transactions, they should notify HUD's Office of Housing. HUD has also inserted the word ''equally'' in Section 2 of the Escrow Agreement for Working Capital in order to clarify HUD's MAP Guide requirement.

Security Instrument

A commenter noted that the provision in section 7(a)(ii) of the Security Instrument setting forth a monthly service charge in the event the note is held by HUD needs to be updated to reflect current policy and suggested a revision. HUD agrees and has updated the provision but has not used the language suggested by the commenter.

Authority Section 3507 of the Paperwork Reduction Act of 1995, 44 U.S.C. Chapter 35.

Dated: July 8, 2014.

Laura Marin,

Associate General Deputy Assistant Secretary for Housing—Federal Housing Commissioner.

[FR Doc. 2014–16315 Filed 7–10–14; 8:45 am]

BILLING CODE 4210–67–P

DEPARTMENT OF HOUSING AND URBAN DEVELOPMENT

[Docket No. FR–5756–N–25]

60-Day Notice of Proposed Information Collection: Request for Prepayment of Section 202 or 202/8 Direct Loan Project

AGENCY: Office of the Assistant Secretary for Housing- Federal Housing Commissioner, HUD.

ACTION: Notice.

SUMMARY: HUD is seeking approval from the Office of Management and Budget (OMB) for the information collection described below. In accordance with the Paperwork Reduction Act, HUD is requesting comment from all interested parties on the proposed collection of information. The purpose of this notice is to allow for 60 days of public comment.

DATES: *Comments Due Date:* September 9, 2014.

ADDRESSES: Interested persons are invited to submit comments regarding this proposal. Comments should refer to the proposal by name and/or OMB Control Number and should be sent to: Colette Pollard, Reports Management Officer, QDAM, Department of Housing and Urban Development, 451 7th Street SW., Room 4176, Washington, DC 20410–5000; telephone 202–402–3400 (this is not a toll-free number) or email at *Colette.Pollard@hud.gov* for a copy of the proposed forms or other available information. Persons with hearing or speech impairments may access this number through TTY by calling the toll-free Federal Relay Service at (800) 877–8339.

FOR FURTHER INFORMATION CONTACT: Colette Pollard, Reports Management Officer, QDAM, Department of Housing and Urban Development, 451 7th Street SW., Washington, DC 20410; email Colette Pollard at *Colette.Pollard@hud.gov* or telephone (202) 402–3400. This is not a toll-free number. Persons with hearing or speech impairments may access this number through TTY by calling the toll-free Federal Relay Service at (800) 877–8339.

Copies of available documents submitted to OMB may be obtained from Ms. Pollard.

SUPPLEMENTARY INFORMATION: This notice informs the public that HUD is seeking approval from OMB for the information collection described in Section A.

A. Overview of Information Collection

Title of Information Collection: Request for Prepayment of Section 202 or 202/8 Project.

OMB Approval Number: 2502–0554.

Type of Request: Extension of a currently approved collection.

Form Number: 9808.

Description of the need for the information and proposed use: Owners of Section 202 projects use the form as the initial application to prepay their Section 202 Direct Loan and provide narrative information relative to the prepayment that must be reviewed by HUD staff.

Respondents: Business, not for profit institutions.

Estimated Number of Respondents: 185.

Estimated Number of Responses: 185.

Frequency of Response: On occasion.

Average Hours per Response: 2 hours.

Total Estimated Burdens: 370.

B. Solicitation of Public Comment

This notice is soliciting comments from members of the public and affected parties concerning the collection of information described in Section A on the following:

(1) Whether the proposed collection of information is necessary for the proper performance of the functions of the agency, including whether the information will have practical utility;

(2) The accuracy of the agency's estimate of the burden of the proposed collection of information;

(3) Ways to enhance the quality, utility, and clarity of the information to be collected; and

(4) Ways to minimize the burden of the collection of information on those who are to respond; including through the use of appropriate automated collection techniques or other forms of information technology, e.g., permitting electronic submission of responses.

HUD encourages interested parties to submit comment in response to these questions.

Authority: Section 3507 of the Paperwork Reduction Act of 1995, 44 U.S.C. Chapter 35.

Dated: July 7, 2014.

Laura M. Marin,

Associate General Deputy Assistant Secretary for Housing-Associate Deputy Federal Housing Commissioner.

[FR Doc. 2014–16314 Filed 7–10–14; 8:45 am]

BILLING CODE 4210–67–P

DEPARTMENT OF HOUSING AND URBAN DEVELOPMENT

[Docket No. FR–5696–N–10]

Additional Clarifying Guidance, Waivers, and Alternative Requirements for Grantees in Receipt of Community Development Block Grant Disaster Recovery FundsUnder the Disaster Relief Appropriations Act, 2013

AGENCY: Office of the Assistant Secretary for Community Planning and Development, HUD.

ACTION: Notice.

SUMMARY: This Notice provides additional clarifying guidance, waivers, and alternative requirements for all Community Development Block Grant (CDBG) disaster recovery grantees in receipt of funds under the Disaster Relief Appropriations Act, 2013 (Pub. L. 113–2).[1] To date, the Department has allocated $14.1 billion under the Act to assist recovery in the most impacted and distressed areas identified in major disaster declarations due to Hurricane Sandy and other eligible events in calendar years 2011, 2012, and 2013.

DATES: *Effective Date:* July 16, 2014.

FOR FURTHER INFORMATION CONTACT: Stan Gimont, Director, Office of Block Grant Assistance, Department of Housing and Urban Development, 451 7th Street SW., Room 7286, Washington, DC 20410, telephone number 202–708–3587. Persons with hearing or speech impairments may access this number via TTY by calling the Federal Relay Service at 800–877–8339. Facsimile inquiries may be sent to Mr. Gimont at 202–401–2044. (Except for the ''800'' number, these telephone numbers are not toll-free.) Email inquiries may be sent to *disaster_recovery@hud.gov.*

SUPPLEMENTARY INFORMATION:

Table of Contents

I. Background
II. Applicable Rules, Statutes, Waivers, and Alternative Requirements
III. Catalog of Federal Domestic Assistance
IV. Finding of No Significant Impact

I. Background

The Disaster Relief Appropriations Act, 2013 (Pub. L. 113–2, approved January 29, 2013) (Appropriations Act) made available $16 billion in Community Development Block Grant (CDBG) funds for necessary expenses related to disaster relief, long-term recovery, restoration of infrastructure and housing, and economic revitalization in the most impacted and distressed areas resulting from a major disaster declared pursuant to the Robert T. Stafford Disaster Relief and Emergency Assistance Act of 1974 (42 U.S.C. 5121 *et seq.*) (Stafford Act), due to Hurricane Sandy and other eligible events in calendar years 2011, 2012, and 2013. As the Appropriations Act requires funds to be awarded directly to a State, or unit of general local government (hereinafter, local government), at the discretion of the Secretary, the term ''grantee'' refers to any jurisdiction that has received a direct award from HUD under the Appropriations Act.

On March 1, 2013, the President issued a sequestration order pursuant to section 251A of the Balanced Budget and Emergency Deficit Control Act, as amended (2 U.S.C. 901a), and reduced funding for CDBG–DR grants under the Appropriations Act to $15.18 billion. To date, $14.1 billion has been allocated for the areas most impacted by Hurricane Sandy and other disasters occurring in 2011, 2012, and 2013. To describe these allocations and the accompanying requirements, the Department published multiple **Federal Register** notices: March 5, 2013 (78 FR 14329), April 19, 2013 (78 FR 23578), May 29, 2013 (78 FR 32262), August 2, 2013 (78 FR 46999), November 18, 2013 (78 FR 69104), March 27, 2014 (78 FR 17173), and June 3, 2014 (79 FR 31964), referred to collectively in this Notice as the ''Prior Notices''). The requirements of the Prior Notices continue to apply, except as modified by this Notice.[2]

II. Applicable Rules, Statutes, Waivers, and Alternative Requirements

The Appropriations Act authorizes the Secretary to waive, or specify alternative requirements for, any provision of any statute or regulation that the Secretary administers in connection with HUD's obligation or use by the recipient of these funds (except for requirements related to fair housing, nondiscrimination, labor standards, and the environment). Waivers and alternative requirements are based upon a determination by the Secretary that good cause exists and that the waiver or alternative requirement is not inconsistent with the overall purposes of title I of the HCD Act. Regulatory waiver authority is also provided by 24 CFR 5.110, 91.600, and 570.5.

This Notice clarifies or modifies requirements of the Prior Notices. Except as noted, the waivers and alternative requirements in this Notice apply to all grants under the Appropriations Act. For each waiver and alternative requirement described in this Notice, the Secretary has determined that good cause exists and the action is not inconsistent with the overall purpose of the HCD Act. Grantees may request additional waivers and alternative requirements from the Department as needed to address specific needs related to their recovery activities. Under the requirements of the Appropriations Act, waivers must be published in the **Federal Register** no later than five days before the effective date of such waiver.

1. *Reporting of contracts.* Public Law 113–2 requires grantees ''to maintain on a public Web site information accounting for how all grant funds are

---

[1] Luzerne, PA initially received disaster assistance under Public Law 112–55 and was provided with additional assistance through Pub. L. 113–2. The waiver in this Notice specific to Luzerne, PA applies to both its 112–55 funds and 113–2 funds as described herein.

[2] Links to the Prior Notices, the text of the Appropriations Act, and additional guidance prepared by the Department for CDBG–DR grants, are available on HUD's Web site under the Office of Community Planning and Development, Disaster Recovery Assistance: *http://portal.hud.gov/hudportal/HUD?src=/program_offices/comm_planning/communitydevelopment/programs/drsi.* The same information is also available on HUD's OneCPD Web site: *https://www.onecpd.info/cdbg-dr/.*

used, including details of all contracts and ongoing procurement processes.'' To streamline the reporting requirements for grantees by eliminating duplicative reporting efforts, and to provide greater transparency regarding procured contracts, HUD is removing the requirement that grantees identify contracts above $25,000 in HUD's Disaster Recovery Reporting System (DRGR) because grantees are already reporting this information in the Federal Subaward Reporting System (FSRS) through USA Spending [usaspending.gov]. Grantees are still required to post contract information as described below. HUD is amending requirements described in the March 5, 2013 Notice as follows:

a. Paragraph 2.b. at 78 FR 14337 is amended to exclude the requirement for grantees ''to identify in the DRGR system any contract over $25,000,'' and now reads as follows: ''DRGR Action Plan. Each grantee must enter its Action Plan for Disaster Recovery, including performance measures, into HUD's DRGR system. As more detailed information about uses of funds is identified by the grantee, it must be entered into the DRGR system at a level of detail that is sufficient to serve as the basis for acceptable performance reports, and permits HUD review of compliance requirements.

The Action Plan must also be entered into the DRGR system so that the grantee is able to draw its CDBG–DR funds. The grantee may enter activities into DRGR before or after submission of the Action Plan to HUD. To enter an activity into the DRGR system, the grantee must know the activity type, national objective, and the organization that will be responsible for the activity. In addition, a Data Universal Numbering System (DUNS) number must be entered into the system for any entity carrying out a CDBG–DR funded activity, including the grantee, recipient(s) and subrecipient(s), contractor(s) and developers carrying out a CDBG–DR activity.

Each activity entered into the DRGR system must also be categorized under a ''project''. Typically, projects are based on groups of activities that accomplish a similar, broad purpose (e.g., Housing, Infrastructure, or Economic Development) or are based on an area of service (e.g., Community A). If a grantee submits a partial Action Plan or amendment to describe just one program (e.g., Single Family Rehabilitation), that program is entered as a project in DRGR. Further, the budget of the program would be identified as the project's budget. If a State grantee has only identified the Method of Distribution (MOD) upon HUD's approval of the published Action Plan, the MOD itself typically serves as the projects in the DRGR system, rather than the activities. As funds are distributed to subgrantees and subrecipients, who decide which specific activities to fund, those activity fields are then populated.

b. Paragraph 23 at 78 FR 14344 is amended to exclude the requirement for grantees to ''enter information on contracts in the DRGR system activity profiles (for all contracts valued over $25,000)'' and now reads as follows: ''Public Web site. The Appropriations Act requires grantees to maintain a public Web site which provides information accounting for how all grant funds are used, and managed/administered, including details of all contracts and ongoing procurement policies. To meet this requirement, each grantee must make the following items available on its Web site: The Action Plan (including all amendments); each QPR (as created using the DRGR system); procurement policies and procedures; status of services or goods currently being procured by the grantee—e.g., phase of the procurement, requirements for proposals, etc.; a copy of contracts the grantee has procured directly; and a summary of all procured contracts, including those procured by the grantee, recipients, or subrecipients. Grantees should post only those contracts subject to 24 CFR 85.36 or in accordance with the State's procurement policies. To assist grantees prepare this summary, HUD has developed a template. The template can be accessed at: *https://www.onecpd.info/cdbg-dr/*. Grantees are required to use this template, and attach an updated version to DRGR each quarter as part of their QPR submissions. Updated summaries must also be posted quarterly on each grantee's Web site.''

2. *Incorporation of clarifications and requirements for grantees in receipt of grant awards made by HUD in response to disasters occurring in 2011 or 2012.* Grantees in receipt of funds under the Appropriations Act for disasters occurring in 2011 or 2012 (see the Notice published in the **Federal Register** May 29, 2013, at 78 FR 32262) are advised that the following paragraphs in section VI. (Applicable Rules, Statutes, Waivers, and Alternative Requirements) of the Notice published November 18, 2013 apply to grant funds provided pursuant to Public Law 113–2: 3.b. (Liquid Fuel Supply Chain Assistance); 5. (Reimbursement of disaster recovery expenses); 6. (Duplication of benefits); 7. (Eligibility of needs assessment and risk analysis costs); 8. (Eligibility of mold remediation); 9. (Eligibility of public services and assistance to impacted households); 10. (Modification of the alternative requirement related to small business assistance); and 11. (Eligibility of Local Disaster Recovery Manager costs) (see 78 FR 69108 through 69110). These paragraphs impose or clarify general requirements or provide additional flexibility in program design and implementation to support resilient recovery following the 2011 and 2012 disasters, while also ensuring that statutory requirements unique to the Appropriations Act are met. Any new requirements established by this paragraph are applicable to all programs initiated in an Action Plan Amendment subsequent to the date of this Notice.

3. *Tenant-based rental assistance (State of New Jersey, only).* The State of New Jersey has requested a waiver of 42 U.S.C. 5305(a) in order to provide tenant-based rental assistance to households impacted by disasters eligible under the Appropriations Act. Eligible assistance includes rental assistance and utility payments and may also include rental costs (i.e., security deposits and utility deposits) when the grantee determines that such payments are necessary to help prevent a household from being homeless. While existing CDBG regulations allow payments for these purposes, those regulations limit assistance to a period not to exceed three months. The State's tenant-based rental assistance will be funded through its Supportive Services program, will be limited to the beneficiaries of that program as described in the State's approved Action Plan, and will not be tied to HUD's Section 8 program assistance.

As a result of Hurricane Sandy, thousands of households in New Jersey were displaced and need housing at a time when the State's housing stock had been substantially reduced. The decrease in the housing supply placed upward pressure on housing costs, making housing less affordable for households already strained by hurricane-related expenses. To date, the State has invested more than $320 million to support the rehabilitation or construction of new affordable rental housing (to create approximately 7,000 units); however, the most vulnerable of Sandy-displaced households—including very low-income persons—continue to need immediate rental assistance until construction of affordable rental units is completed and those units become available.

The goal of this waiver is to minimize the time households are homeless by

providing re-housing and rental assistance, and by linking the person or family with services that can help them become stable and self-sufficient. Throughout the rental period, assisted households will receive referrals to available long-term units, as well as housing counseling. Further, the State plans to establish a referral process that will enable the targeted households to apply to live in the affordable housing units created under other CDBG–DR funded programs.

The State's use of CDBG–DR funds for this purpose advances the Department's priority to support forward-thinking solutions to help communities that are struggling to house and serve persons and families that are homeless or at risk of homelessness. In addition, HUD has previously granted the States of Louisiana and New York, as well as New York City, similar waivers in response to Hurricanes Katrina, Rita, and Sandy. After reviewing the State's request, HUD is waiving 42 U.S.C. 5305(a), to the extent necessary, to make eligible up to $17 million in rental assistance and utility payments paid for up to 2 years on behalf of homeless and at-risk low- and moderate-income households displaced by Hurricane Sandy, when such assistance or payments are part of a homeless prevention or rapid re-housing program or activity. The Department is approving the State's request for a waiver to allow for the payment of tenant-based rental assistance. This waiver is in effect from January 1, 2014 to January 1, 2016.

4. *Documentation of Low- and Moderate-Income National Objective for Multi-Unit Housing Projects (State of New Jersey, only).* Per the HCD Act and the Prior Notices, Hurricane Sandy CDBG–DR grantees may fund the rehabilitation, reconstruction, and new construction of housing. To further address its housing needs, the State of New Jersey has requested to measure the benefit to low- and moderate-income households, in multiunit residential projects, in a manner more supportive of mixed income housing. In general, the applicable regulation, 24 CFR 570.208(a)(3), requires at least 51 percent of the units in an assisted multi-unit structure to be occupied by residents that are income eligible. This method of calculating the benefit to low- and moderate-income households is often referred to as the structure basis.

HUD has reviewed other housing assistance programs that measure benefit differently—only those units in a multi-unit structure occupied by income eligible residents are used to calculate the benefit to low- and moderate-income households. Under this ''unit'' approach, when units are alike, the proportion of CDBG funds contributed to the project may be no more than the proportion of units in the project that will be occupied by income-eligible households. For this reason, this approach is sometimes called the proportional units approach. In other words, the rule under the structure approach is that a dollar of CDBG assistance to a structure means that 51 percent of the units must meet income requirements. Under the unit approach, the amount of assistance provided is equal to the cost of units occupied by low- and moderate-income households.

Based on HUD experience, the unit approach can be more compatible with large-scale development of mixed-income housing. For example, in response to the widespread devastation caused by Hurricanes Katrina and Rita, HUD allowed the states of Louisiana and Mississippi to use this approach under their respective CDBG–DR programs. Additionally—(1) the CDBG program rule has a built-in exception that allows limited use of the unit basis for multi-unit non-elderly new construction structures with between 20 and 50 percent low- and moderate-income occupancy, (2) in the HOME Investment Partnerships program, HUD's primary housing production program, HUD grantees use funds to pay for the cost of affordable units, and (3) the Neighborhood Stabilization Program permitted grantees to use a unit basis approach to meet the CDBG low- and moderate-income benefit requirement.

After review of the State of New Jersey's Action Plan for Disaster Recovery, and discussions with the State regarding its intent to encourage mixed-income housing development, HUD has determined that it is consistent with the overall purposes of the HCD Act to provide the State the requested additional flexibility in measuring program benefit. Therefore, the waiver and alternative requirements allow the State to measure benefit within a housing development project: (1) According to the existing CDBG requirements or (2) according to the unit approach described above for multi-unit housing projects involving rehabilitation and/or reconstruction. However, the second option may only be used if the units are generally comparable in size and finishes. The State must select and use one method for each project. For these purposes, the term ''project'' will have the same meaning as in the HOME program at 24 CFR 92.2. The State is reminded that per 2 CFR part 225, CDBG–DR costs must be necessary and reasonable. To meet this requirement, the State must develop policies and procedures to document its costs for housing investments are necessary and reasonable. The State must also meet all civil rights and fair housing requirements and comply with any applicable civil rights or fair housing related voluntary compliance agreements, settlement agreements, or consent decrees.

5. *Limited purpose modification of overall benefit requirement (Luzerne County, Pennsylvania, only).* The primary objective of the Housing and Community Development Act is the ''development of viable urban communities, by providing decent housing and a suitable living environment and expanding economic opportunities, principally for persons of low- and moderate-income'' (42 U.S.C. 5301 et seq.). To carry out this objective, the statute requires that 70 percent of the aggregate of the grantee's CDBG program's funds be used to support activities benefitting low- and moderate-income persons.

This target can be difficult, if not impossible, for many CDBG–DR grantees to reach as a disaster impacts entire communities—regardless of income. Further, it may prevent grantees from providing assistance to the most damaged areas of need. Therefore, as described by the Prior Notices, Luzerne County, in addition to the other grantees under the Appropriations Act, received a waiver and alternative requirement—only 50 percent of funds must be used for activities that benefit low- and moderate-income persons. Additional flexibility was provided in the March 5, 2013 Notice (78 FR 14329) and the May 29, 2013 Notice (FR 32262), which is applicable to Luzerne County. It allows a grantee to request a further reduction of its overall benefit requirement by submitting a justification that, at a minimum: (a) Identifies the planned activities that meet the needs of its low- and moderate-income population; (b) describes proposed activity(ies) and/or program(s) that will be affected by the alternative requirement, including their proposed location(s) and role(s) in the grantee's long-term disaster recovery plan; (c) describes how the activities/programs identified in (b) prevent the grantee from meeting the 50 percent requirement; and (d) demonstrates that the needs of non-low and moderate-income persons or areas are disproportionately greater, and that the jurisdiction lacks other resources to serve them. After review of grantee requests, under the Appropriations Act, HUD can grant such a waiver request only if the Secretary finds a compelling need to reduce the overall benefit below 50 percent.

In response to the above, Luzerne County submitted justification addressing the required criteria. As described in the correspondence, the county has received two awards of CDBG–DR funds (appropriated under two separate laws and totaling more than $25.5 million) in response to disasters that occurred in 2011 (Hurricane Irene and Tropical Storm Lee). The county's first allocation was for $15,738,806 under Section 239 of the Department of Housing and Urban Development Appropriations Act, 2012 (Pub. L. 112–55, approved November 18, 2011). The second allocation to the county for $9,763,000 was made under Public Law 113–2.

Initially, the county's first award allocated funds to acquisition/buyouts, housing rehabilitation and mitigation, and infrastructure. The county anticipated that buyouts would be primarily paid for using FEMA funds under the FEMA's Hazard Mitigation Grant Program; CDBG–DR funds would provide the local match (25 percent). However, following approval of the county's CDBG–DR Action Plan, FEMA announced that requests for acquisition far exceeded available funds. Thus, citizens and local elected officials requested that CDBG–DR address this unmet need. In response, the county participated in public meetings to gauge the scope of unmet need. It was determined that approximately 100 residential properties (across 14 jurisdictions) could not be funded by FEMA, but those property owners wished to participate in a voluntary buyout program. Additionally, while other citizens were no longer interested in a buyout (they were either back in their homes or would be soon), they were in need of assistance to elevate or otherwise mitigate their disaster-impacted homes. As a result, the county amended its Action Plan to pay 100 percent of the costs associated with acquiring properties, and demolishing any structures, in order to assist participating households' recovery in a safer area, and reduce future flood hazards and prevent the loss of life. In counties such as Luzerne with a history of flooding, the need for a buyout program is particularly compelling. The county's buyout activities ($11,951,625 for residential properties and $1 million for commercial properties) will use the majority of its first CDBG–DR allocation. The remainder of funds are programmed to infrastructure ($1.2 million) and administration and planning ($1.6 million). While the Action Plan includes housing rehabilitation as an eligible activity, this will only be funded if all buyout needs have been addressed and CDBG–DR funds are available.

Of note, Luzerne County's residential buyout program is prioritizing low- and moderate-income property owners. To date, of the 100 properties estimated to participate in the program, 68 property owners have submitted pre-applications. An initial review shows that only 30 of the 68 owners are low- and moderate-income households (44 percent). Approximately 44 percent of the households will be of low- and moderate-income, and the county estimates that of the total amount budgeted for residential buyouts, $3,940,715 will benefit low- and moderate-income households. In addition, the county has plans to address the needs of low- and moderate income households it moves out of harm's way, through a down payment assistance to assist households who require assistance in buying a replacement home. As applications with the greatest need under the infrastructure program and the commercial buyout programs are not in areas with significant low-and moderate- income populations, these programs will not help the county meet its overall benefit requirement. The county anticipates an overall low- and moderate-income benefit of 27.82 percent for its first CDBG–DR allocation.

In regards to the county's second award of CDBG–DR funds, the primary activity to be funded is infrastructure ($8,786,700). The remaining funds, $976,300, are for administration and planning. As the census tracts and block groups most impacted by the 2011 disasters and in need of assistance are not predominately low- and moderate-income, and as infrastructure activities generally only meet the low- and moderate-income national objective on an area basis, the county has requested a reduction of the overall benefit requirement for this grant as well. (The county is prioritizing infrastructure activities with this grant due to the significant unmet needs demonstrated. Further, market studies indicate little demand in the county for new housing stock and the county's business assistance program received no applications). Based on infrastructure applications received to date, the county anticipates that three projects, totaling $3,268,000, will benefit low- and moderate-income households on an area basis. Thus, the overall low- and moderate-income benefit for the second grant award is projected to be 37.19 percent.

To enable the county to undertake the activities it has deemed most critical for its recovery, and to ensure that low- and moderate-income households are adequately served and/or assisted, HUD is granting a limited waiver and alternative requirement to reduce the overall benefit from 50 percent to not less than 27 percent for the county's first allocation of CDBG–DR funds, and to not less than 37 percent for the county's second allocation of CDBG–DR funds. Based on the county's justification, the Secretary has found a compelling need for this reduction due to the unique circumstances related to Luzerne County's request. In particular, HUD notes that the county prioritized the needs of low- and moderate-income populations with its first allocation; the county has identified getting people out of harm's way as a top priority and this waiver will allow low- and moderate-income families to take advantage of Luzerne's program for this purpose; and finally, the waiver will enable the county to undertake critical infrastructure activities necessary to its recovery. This is a limited waiver modifying 42 U.S.C. 5301(c), 42 U.S.C. 5304(b)(3)(A), 24 CFR 570.484, and 570.200(a)(3) only to the extent necessary to permit the county to use funds appropriated by Public Law 112–55 for its residential buyout program, to use funds appropriated by Public Law 113–2 for its infrastructure program, as described by the county's Action Plans.

III. Catalog of Federal Domestic Assistance

The Catalog of Federal Domestic Assistance number for the disaster recovery grants under this Notice is as follows: 14.269.

IV. Finding of No Significant Impact

A Finding of No Significant Impact (FONSI) with respect to the environment has been made in accordance with HUD regulations at *24 CFR part 50*, which implement section 102(2)(C) of the National Environmental Policy Act of 1969 (42 U.S.C. 4332(2)(C)). The FONSI is available for public inspection between 8 a.m. and 5 p.m. weekdays in the Regulations Division, Office of General Counsel, Department of Housing and Urban Development, 451 7th Street SW., Room 10276, Washington, DC 20410–0500. Due to security measures at the HUD Headquarters building, an advance appointment to review the docket file must be scheduled by calling the Regulations Division at 202–708–3055 (this is not a toll-free number). Hearing or speech-impaired individuals may access this number through TTY by calling the toll-free Federal Relay Service at 800–877–8339.

Dated: July 7, 2014.

Clifford Taffet,

General Deputy Assistant Secretary for Community Planning and Development.

[FR Doc. 2014–16316 Filed 7–10–14; 8:45 am]

BILLING CODE 4210–67–P

DEPARTMENT OF HOUSING AND URBAN DEVELOPMENT

[Docket No. FR–5750–N–28]

Federal Property Suitable as Facilities To Assist the Homeless

AGENCY: Office of the Assistant Secretary for Community Planning and Development, HUD.

ACTION: Notice.

SUMMARY: This Notice identifies unutilized, underutilized, excess, and surplus Federal property reviewed by HUD for suitability for use to assist the homeless.

FOR FURTHER INFORMATION CONTACT: Juanita Perry, Department of Housing and Urban Development, 451 Seventh Street SW., Room 7266, Washington, DC 20410; telephone (202) 402–3970; TTY number for the hearing- and speech-impaired (202) 708–2565 (these telephone numbers are not toll-free), or call the toll-free Title V information line at 800–927–7588.

SUPPLEMENTARY INFORMATION: In accordance with 24 CFR part 581 and section 501 of the Stewart B. McKinney Homeless Assistance Act (42 U.S.C. 11411), as amended, HUD is publishing this Notice to identify Federal buildings and other real property that HUD has reviewed for suitability for use to assist the homeless. The properties were reviewed using information provided to HUD by Federal landholding agencies regarding unutilized and underutilized buildings and real property controlled by such agencies or by GSA regarding its inventory of excess or surplus Federal property. This Notice is also published in order to comply with the December 12, 1988 Court Order in *National Coalition for the Homeless v. Veterans Administration,* No. 88–2503–OG (D.D.C.).

Properties reviewed are listed in this Notice according to the following categories: Suitable/available, suitable/unavailable, and suitable/to be excess, and unsuitable. The properties listed in the three suitable categories have been reviewed by the landholding agencies, and each agency has transmitted to HUD: (1) Its intention to make the property available for use to assist the homeless, (2) its intention to declare the property excess to the agency's needs, or (3) a statement of the reasons that the property cannot be declared excess or made available for use as facilities to assist the homeless.

Properties listed as suitable/available will be available exclusively for homeless use for a period of 60 days from the date of this Notice. Where property is described as for ''off-site use only'' recipients of the property will be required to relocate the building to their own site at their own expense. Homeless assistance providers interested in any such property should send a written expression of interest to HHS, addressed to Theresa Ritta, Ms. Theresa M. Ritta, Chief Real Property Branch, the Department of Health and Human Services, Room 5B–17, Parklawn Building, 5600 Fishers Lane, Rockville, MD 20857, (301) 443–2265 (This is not a toll-free number.) HHS will mail to the interested provider an application packet, which will include instructions for completing the application. In order to maximize the opportunity to utilize a suitable property, providers should submit their written expressions of interest as soon as possible. For complete details concerning the processing of applications, the reader is encouraged to refer to the interim rule governing this program, 24 CFR part 581.

For properties listed as suitable/to be excess, that property may, if subsequently accepted as excess by GSA, be made available for use by the homeless in accordance with applicable law, subject to screening for other Federal use. At the appropriate time, HUD will publish the property in a Notice showing it as either suitable/available or suitable/unavailable.

For properties listed as suitable/unavailable, the landholding agency has decided that the property cannot be declared excess or made available for use to assist the homeless, and the property will not be available.

Properties listed as unsuitable will not be made available for any other purpose for 20 days from the date of this Notice. Homeless assistance providers interested in a review by HUD of the determination of unsuitability should call the toll free information line at 1–800–927–7588 for detailed instructions or write a letter to Ann Marie Oliva at the address listed at the beginning of this Notice. Included in the request for review should be the property address (including zip code), the date of publication in the **Federal Register**, the landholding agency, and the property number.

For more information regarding particular properties identified in this Notice (i.e., acreage, floor plan, existing sanitary facilities, exact street address), providers should contact the appropriate landholding agencies at the following addresses: AGRICULTURE: Ms. Debra Kerr, Department of Agriculture, Reporters Building, 300 7th Street SW., Room 300, Washington, DC 20024, (202) 720–8873; AIR FORCE: Ms. Connie Lotfi, Air Force Real Property Agency, 143 Billy Mitchell Blvd., San Antonio, TX 78226, (210) 925–3047; COE: Mr. Scott Whiteford, Army Corps of Engineers, Real Estate, CEMP–CR, 441 G Street NW., Washington, DC 20314; (202) 761–5542; ENERGY: Mr. David Steinau, Department of Energy, Office of Property Management, 1000 Independence Ave. SW., Washington, DC 20585 (202) 287–1503; GSA: Mr. Flavio Peres, General Services Administration, Office of Real Property Utilization and Disposal, 1800 F Street NW., Room 7040, Washington, DC 20405, (202) 501–0084; INTERIOR: Mr. Michael Wright, Acquisition & Property Management, Department of the Interior, 3960 N. 56th Ave. #104, Hollywood, FL 33021; (443) 223–4639; NAVY: Mr. Steve Matteo, Department of the Navy, Asset Management Division, Naval Facilities Engineering Command, Washington Navy Yard, 1330 Patterson Ave. SW., Suite 1000, Washington, DC 20374; (202) 685–9426 (These are not toll-free number).

Dated: July 3, 2014.

Brian P. Fitzmauricem

Director, Division of Community Assistance, Office of Special Needs Assistance Programs.

TITLE V, FEDERAL SURPLUS PROPERTY PROGRAMFEDERAL REGISTER REPORT FOR 07/11/2014

Suitable/Available Properties

Building

Colorado

Turley House
Reclamation
Grand Junction CO 81503
Landholding Agency: Interior
Property Number: 61201420004
Status: Unutilized
Directions: House; Garage/Carport; Shop/Shed
Comments: off-site removal only; no future service need; 3,603 total sq. ft.; structural delicacies; contact interior for more information.

Georgia

Records Holding 661246B024, RPUD 03 54976
934 College Station Road
Athens GA 30605
Landholding Agency: Agriculture
Property Number: 15201420021
Status: Excess
Comments: off-site removal only; 196 sq. ft.; storage; good conditions; secured area; contact Agriculture for more information.

Hazardous Chemical Waste
Holding 661246B025, RPUID 03.54977
934 College Station Road
Athens GA 30605
Landholding Agency: Agriculture
Property Number: 15201420022
Status: Excess
Comments: off-site removal only; 196 sq. ft.; good conditions; contamination; secured area; contact Agriculture for more information.

Records Holding 661246B022, RPUID 03.54974
934 College Station Road
Athens GA 30605
Landholding Agency: Agriculture
Property Number: 15201420023
Status: Excess
Comments: off-site removal only; 196 sq. ft.; storage; fair conditions; secured area; contact Agriculture for more information.

Cage Storage 661246B021, RPUID 03.54973
934 College Station Road
Athens GA 30605
Landholding Agency: Agriculture
Property Number: 15201420024
Status: Excess
Comments: off-site; removal only; 586 sq. ft.; 51+ years old; poor conditions; rotten roof; leaking; has holes; water damage; secured area; contact Agriculture for more information.

Records Holding 661246B0023, RPUID 03.54975
934 College Station Road
Athens GA 30605
Landholding Agency: Agriculture
Property Number: 15201420025
Status: Excess
Comments: off-site removal only; 196 sq. ft.; storage; fair conditions; secured area; contact Agriculture for more information.

Idaho

Ditchrider House
3970 1st Lane East
Parma ID 83660
Landholding Agency: GSA
Property Number: 54201420011
Status: Excess
GSA Number: 9–I–ID–0585
Directions: Landholding Agency: Dept. of Homeland Security; Disposal Agency: GSA
Comments: 1,194 sq. ft.; residence; 48+ months vacant; extensive repairs needed; contact GSA for more info.

BOR Upper Shake River
Field Office
1359 Hansen Ave.
Burley ID 83318
Landholding Agency: GSA
Property Number: 54201420012
Status: Excess
GSA Number: 9–I–ID–0586
Directions: Landholding Agency: Interior; Disposal Agency: GSA
Comments: 9,828 sq. ft.; office; 48+ months vacant; good to moderate conditions; contact GSA for more info.

Illinois

Peoria Radio Repeater Site
Between Spring Creek and Caterpillar Lane
Peoria IL
Landholding Agency: GSA
Property Number: 54201420008
Status: Excess
GSA Number: I–D–IL–806
Directions: Landholding Agency; COE; Disposal agency GSA
Comments: 8 x 12 equipment storage shed; fair conditions contact GSA for more information.

Kansas

Shower Latrine
Riverside Park
Sylvan Grove KS 67481
Landholding Agency: COE
Property Number: 31201420019
Status: Underutilized
Comments: off-site removal only; no future agency need; 612 sq. ft.; fair conditions; contact COE for more info.

Oregon

Lost Creek Lake
Catfish Cove Restrooms
LCL OR
Landholding Agency: COE
Property Number: 31201430001
Status: Underutilized
Comments: off-site removal only; no future agency need; each 6′x6′; repairs needed; contact COE for more information.

North Unit ID/Duplex 3 (504)
Apt. 1 & 2 R0112000600B
616 NW Lindberg
Madras OR 97741
Landholding Agency: Interior
Property Number: 61201420005
Status: Unutilized
Comments: offsite removal only; no future agency need; 2,000 sq. ft.; 6+ months vacant; poor conditions; contact Interior for more info.

Texas

Waco Lake; Reynolds Creek Park
Restroom #5
2885 Speegleville Rd.
North Waco TX 76712
Landholding Agency: COE
Property Number: 31201420015
Status: Excess
Comments: off-site removal only; 505 sq. ft.; repairs needed; secured area; contact COE for more info.

Waco Lake; Reynolds Creek
Park Restroom #3
2885 Speegleville Road
North Waco TX 76712
Landholding Agency: COE
Property Number: 31201420016
Status: Excess
Comments: off-site removal only; 505 sq. ft.; repairs needed; secured area; contact COE for info.

Waco Lake; Reynolds Creek
Park Restroom #4
2885 Speegleville Road
North Waco TX 76712
Landholding Agency: COE
Property Number: 31201420017
Status: Excess
Comments: off-site removal only; 505 sq. ft.; repairs needed; secured area; contact COE for more info.

Waco Lake; Reynolds Creek
Park Restroom #2
2885 Speegleville Road
North Waco TX 76712
Landholding Agency: COE
Property Number: 31201420018
Status: Excess
Comments: off-site removal only; 505 sq. ft.; repairs needed; secured area; contact COE for more info.

Washington

Old Colville Border Patrol
209 E. Juniper Ave.
Colville WA 99114
Landholding Agency: GSA
Property Number: 54201420009
Status: Excess
GSA Number: 9–Z–WA–1272
Directions: Landholding Agency: Dept. of Homeland Security; Disposal Agency: GSA
Comments: 5,500 sq. ft.; office; 18+ months vacant; good to moderate conditions; contact GSA for more info.

Old Oroville Border Patrol Station
1105 Main St.
Oroville WA 98844
Landholding Agency: GSA
Property Number: 54201420010
Status: Excess
GSA Number: 9–Z–WA–1272–AB
Directions: Landholding Agency: Dept. of Homeland Security; Disposal Agency: GSA
Comments: 5,500 sq. ft.; office; 18+ months vacant; good to moderate conditions; contact GSA for more info.

Unsuitable Properties

Land

Virginia

UIC M00264
Marine Corps Base
Quantico VA
Landholding Agency: Navy
Property Number: 77201420029
Status: Unutilized
Comments: Public access denied & no alternative method to gain access without compromising national security
Reasons: Secured Area.

Building

Michigan

3 Building
Bunker Road
Selfridge MI 48045
Landholding Agency: Air Force
Property Number: 18201420054
Status: Unutilized
Directions: 1451; 1452; 1453
Comments: Public access denied & no alternative method to gain access without compromising national security
Reasons: Secured Area.

Virginia

Building 3303
Marine Corps Base
Quantico VA 22134
Landholding Agency: Navy
Property Number: 77201420030
Status: Unutilized
Comments: Public access denied & no alternative method to gain access without compromising national security
Reasons: Secured Area.

UIC M00264; BLDG. 2085
Marine Corps Base
Quantico VA 22134

Landholding Agency: Navy
Property Number: 77201420031
Status: Excess
Comments: Public access denied & no alternative method to gain access without compromising national security
Reasons: Secured Area.

Land

Wyoming

Spook Wyoming Site
Acid Pond Parcel
North of Glenrock WY 82633
Landholding Agency: Energy
Property Number: 41201420003
Status: Excess
Comments: Can be reached only by crossing private property and there is no established right or means of entry
Reasons: Other—Land locked; Not accessible by road.

[FR Doc. 2014–16033 Filed 7–10–14; 8:45 am]

BILLING CODE 4210–67–P

DEPARTMENT OF THE INTERIOR

Fish and Wildlife Service

[FWS–HQ–EA–2014–N140; FF09F42300–FVWF97920900000–XXX]

Sport Fishing and Boating Partnership Council

AGENCY: Fish and Wildlife Service, Interior.

ACTION: Notice of teleconference.

SUMMARY: We, the U.S. Fish and Wildlife Service (Service), announce a public teleconference of the Sport Fishing and Boating Partnership Council (Council).

DATES: *Teleconference:* Wednesday, July 23, 2014, 1 p.m. to 2 p.m. (Eastern daylight time). For deadlines and directions on registering to listen to the teleconference, submitting written material, and giving an oral presentation, please see ''Public Input'' under **SUPPLEMENTARY INFORMATION.**

FOR FURTHER INFORMATION CONTACT: Brian Bohnsack, Council Coordinator, via U.S. mail at 4401 North Fairfax Drive, Mailstop 720–FAC, Arlington, VA 22203; via telephone at (703) 358–2435; via fax at (703) 358–2548; or email (*brian_bohnsack@fws.gov*).

SUPPLEMENTARY INFORMATION: In accordance with the requirements of the Federal Advisory Committee Act, 5 U.S.C. App., we announce that Sport Fishing and Boating Partnership Council will hold a teleconference.

Background

The Council was formed in January 1993 to advise the Secretary of the Interior, through the Director of the Service, on nationally significant recreational fishing, boating, and aquatic resource conservation issues. The Council represents the interests of the public and private sectors of the sport fishing, boating, and conservation communities and is organized to enhance partnerships among industry, constituency groups, and government. The 18-member Council, appointed by the Secretary of the Interior, includes the Service Director and the president of the Association of Fish and Wildlife Agencies, who both serve in ex officio capacities. Other Council members are directors from State agencies responsible for managing recreational fish and wildlife resources and individuals who represent the interests of saltwater and freshwater recreational fishing, recreational boating, the recreational fishing and boating industries, recreational fisheries resource conservation, Native American tribes, aquatic resource outreach and education, and tourism. Background information on the Council is available at *http://www.fws.gov/sfbpc*.

Meeting Agenda

The Council will hold a teleconference to:

- Consider and approve a response to a request for comments on proposed regulations for the U.S. Fish and Wildlife Service's Boating Infrastructure Grant program;
- Consider other Council business, including planning for the July 30–31, 2014, meeting.

The final agenda will be posted on the Internet at *http://www.fws.gov/sfbpc*.

Public Input

If you wish to . . .	You must contact the Council Coordinator (see **FOR FURTHER INFORMATION CONTACT**) no later than . . .
Listen to the teleconference	Thursday, July 17, 2014.
Submit written information or questions before the teleconference for the council to consider during the teleconference.	Thursday, July 17, 2014.
Give an oral presentation during the teleconference	Thursday, July 17, 2014.

Submitting Written Information or Questions

Interested members of the public may submit relevant information or questions for the Council to consider during the teleconference. Written statements must be received by the date listed in ''Public Input'' under **SUPPLEMENTARY INFORMATION**, so that the information may be made available to the Council for their consideration prior to this teleconference. Written statements must be supplied to the Council Coordinator in one of the following formats: One hard copy with original signature, and one electronic copy via email (acceptable file formats are Adobe Acrobat PDF, MS Word, MS PowerPoint, or rich text file).

Giving an Oral Presentation

Individuals or groups requesting to make an oral presentation during the teleconference will be limited to 2 minutes per speaker, with no more than a total of 15 minutes for all speakers. Interested parties should contact the Council Coordinator, in writing (preferably via email; see **FOR FURTHER INFORMATION CONTACT**), to be placed on the public speaker list for this teleconference. To ensure an opportunity to speak during the public comment period of the teleconference, members of the public must register with the Council Coordinator. Registered speakers who wish to expand upon their oral statements, or those who had wished to speak but could not be accommodated on the agenda, may submit written statements to the Council Coordinator up to 30 days subsequent to the teleconference.

Meeting Minutes

Summary minutes of the teleconference will be maintained by the Council Coordinator (see **FOR FURTHER INFORMATION CONTACT**) and will be available for public inspection within 90 days of the meeting and will be posted on the Council's Web site at *http://www.fws.gov/sfbpc*.

Rowan W. Gould,

Deputy Director.

[FR Doc. 2014–16213 Filed 7–10–14; 8:45 am]

BILLING CODE 4310–55–P

DEPARTMENT OF THE INTERIOR

Bureau of Land Management

[LLWY922000–L13200000–EL0000, WYW1 83321]

Notice of Invitation to Participate; Coal Exploration License Application WYW183321, Wyoming

AGENCY: Bureau of Land Management, Interior.

ACTION: Notice.

SUMMARY: Pursuant to the Mineral Leasing Act of 1920, as amended by the Federal Coal Leasing Amendments Act of 1976, and to Bureau of Land Management (BLM) regulations, all interested parties are hereby invited to participate with Bridger Coal Company on a pro rata cost-sharing basis, in its program for the exploration of coal deposits owned by the United States of America in Sweetwater County, Wyoming.

DATES: This notice of invitation will be published in the *Rock Springs Rocket-Miner* once each week for 2 consecutive weeks beginning the week of June 9, 2014, and in the **Federal Register** Any party electing to participate in this exploration program must send written notice to both the BLM and Bridger Coal Company, as provided in the **ADDRESSES** section below, no later than 30 days after publication of this invitation in the **Federal Register**.

ADDRESSES: Copies of the exploration plan are available for review during normal business hours in the following offices (serialized under number WYW183321): BLM, Wyoming State Office, 5353 Yellowstone Road, Cheyenne, WY 82009; and, BLM, Rock Springs Field Office, 280 Highway 191 North, Rock Springs, WY 82901. The written notice should be sent to the following addresses: Bridger Coal Company, c/o Interwest Mining Co., Attn: Scott M. Child, 1407 W. North Temple, #310, Salt Lake City, UT 84116 and the BLM Wyoming State Office, Branch of Solid Minerals, Attn: Jackie Madson, P.O. Box 1828, Cheyenne, WY 82003.

FOR FURTHER INFORMATION CONTACT: Jackie Madson, Land Law Examiner, at 307–775–6258. Persons who use a telecommunications device for the deaf (TDD) may call the Federal Information Relay Service (FIRS) at 1–800–877–8339 to contact the above individual during normal business hours. The FIRS is available 24 hours a day, 7 days a week, to leave a message or question with the above individual. You will receive a reply during normal business hours.

SUPPLEMENTARY INFORMATION: Bridger Coal Company has applied to the BLM for a coal exploration license on public land to the west of the Jim Bridger underground coal mine. The purpose of the exploration program is to obtain structural and quality information of the coal. The BLM regulations at 43 CFR 3410 require the publication of an invitation to participate in the coal exploration in the **Federal Register**.The Federal coal resources included in the exploration license application are located in the following described lands in Wyoming:

Sixth Principal Meridian

T. 22 N., R. 101 W.,
Sec. 28, lots 1 to 15, inclusive, and NW1/4SE1/4.

The area described contains 639.49 acres.

The proposed exploration program is fully described and will be conducted pursuant to an exploration plan to be approved by the BLM.

Authority: 43 CFR 3410.2–1(c)(1).

Larry Claypool,
Deputy State Director, Minerals and Lands.

[FR Doc. 2014–16226 Filed 7–10–14; 8:45 am]

BILLING CODE 4310–22–P

DEPARTMENT OF THE INTERIOR

Bureau of Land Management

[14X 1109AF LLUT9223000 L13200000.EL0000, UTU–90194]

Notice of Invitation to Participate; Coal Exploration License Application UTU–90194, Sevier County, UT

AGENCY: Bureau of Land Management, Interior.

ACTION: Notice.

SUMMARY: Pursuant to Mineral Leasing Act of 1920, as amended by the Federal Coal Leasing Amendments Act of 1976 and Bureau of Land Management (BLM) regulations, members of the public are invited to participate with Canyon Fuel Company, LLC, on a pro rata cost sharing basis in a program for the exploration of coal deposits owned by the United States of America in Sevier County, Utah.

DATES: Any party seeking to participate in this exploration program must send written notice to both the BLM and Canyon Fuel Company, LLC, to the addresses provided in the **ADDRESSES** section below, no later than August 11, 2014. Such written notice must refer to serial number UTU–90194. The notice of invitation to participate in this coal exploration license was published in the Richfield Reaper, beginning the third week of January 2014, once each week for two consecutive weeks.

ADDRESSES: Copies of the exploration license application UTU–90194 and the proposed plan are available for review from 7:45 a.m.–4:30 p.m., Monday through Friday, excluding Federal holidays, in the public room of the BLM-Utah State Office, 440 West 200 South, Suite 500, Salt Lake City, UT 84101.

A written notice to participate in the exploration program should be sent to Roger Bankert, Bureau of Land Management, Utah State Office, Division of Lands and Minerals, 440 West 200 South, Suite 500, Salt Lake City, UT 84101, and to Mark Bunnell, Canyon Fuel Company LLC, c/o SUFCO Mine, 597 South SR 24, Salina, UT 84654.

FOR FURTHER INFORMATION CONTACT: Stan Perkes by telephone (801)539–4036, or by email: *sperkes@blm.gov.* Persons who use a telecommunications device for the deaf (TDD) may call the Federal Information Relay Service (FIRS) at 1–800–877–8339 to contact the above individual. The FIRS is available 24 hours a day, 7 days a week, to leave a message or question with the above individual. You will receive a reply during normal business hours.

SUPPLEMENTARY INFORMATION: The exploration activities will be performed pursuant to the Mineral Leasing Act of 1920, as amended, 30 U.S.C. 201(b), and to the regulations at 43 CFR Part 3410. The purpose of the exploration program is to gain additional geologic knowledge of the coal underlying the exploration area for the purpose of assessing the coal resources. The exploration program is fully described and will be conducted pursuant to an exploration license and plan approved by the BLM. The exploration plan may be modified to accommodate the legitimate exploration needs of persons seeking to participate.

Canyon Fuel Company, LLC, has applied to the BLM for a coal exploration license on U.S. Forest Service surface with federally-owned minerals in Sevier County, Utah.

The lands to be explored for coal deposits in exploration license UTU–90194 are described as follows:

T. 21 S., R. 4 E., SLM, Utah
Sec. 13, W½NE¼, E½NW¼;
Sec. 21, all;
Sec. 22, all;
Sec. 23, W½NW¼, W½SW¼;
Sec. 26, W½NW¼;
Sec. 27, N½;
Secs. 28–33, all.

Containing 5,770.93 acres.

The Federal coal within the lands described for exploration license

application UTU–90194 is currently unleased for development of Federal coal reserves.

Authority: 43 CFR 3410.2–1(c)(1).

Jenna Whitlock,

Associate State Director.

[FR Doc. 2014–16223 Filed 7–10–14; 8:45 am]

BILLING CODE 4310–DQ–P

DEPARTMENT OF THE INTERIOR

Bureau of Land Management

[LLMT921000–14–L13200000–EL0000–P; NDM 107286]

Notice of Invitation to Participate; Coal Exploration License Application NDM 107286, North Dakota

AGENCY: Bureau of Land Management, Interior.

ACTION: Notice.

SUMMARY: Pursuant to the Mineral Leasing Act of 1920, as amended by the Federal Coal Leasing Amendments Act of 1976, and to Bureau of Land Management (BLM) regulations, members of the public are invited to participate with BNI Coal Ltd. on a pro rata cost sharing basis in a program for the exploration of coal deposits owned by the United States of America in lands located in Oliver County, North Dakota.

DATES: Any party seeking to participate in this exploration program must send written notice to both the Bureau of Land Management (BLM) and BNI Coal Ltd. as provided in the **ADDRESSES** section below no later than August 11, 2014 or 10 calendar days after the last publication of this Notice in the *Bismarck Tribune* newspaper, whichever is later. This Notice will be published once a week for 2 consecutive weeks in the *Bismarck Tribune,* Bismarck, North Dakota. Such written notice must refer to serial number NDM 107286.

ADDRESSES: The proposed exploration license and plan (serialized under number NDM 107286) are available for review from 9 a.m. to 4 p.m., Monday through Friday, in the public room at the BLM Montana State Office, 5001 Southgate Drive, Billings, Montana. The exploration license application and exploration plan are also available for viewing on the Montana State Office coal Web site at *http://www.blm.gov/mt/st/en/prog/energy/coal.html*.

A written notice to participate in the exploration license should be sent to the State Director, BLM Montana State Office, 5001 Southgate Drive, Billings, MT 59101–4669 and BNI Coal, 2360 35th Avenue SW., Center, ND 58530.

FOR FURTHER INFORMATION CONTACT: Anne Allen, telephone 406–896–5082 or email at *amallen@blm.gov*; or Kym Dowdle, telephone 406–896–5046, or email at *kdowdle@blm.gov*. Persons who use a telecommunications device for the deaf (TDD) may call the Federal Information Relay Service (FIRS) at 1–800–877–8339 to contact the above individuals during normal business hours. The FIRS is available 24 hours a day, 7 days a week, to leave a message or question for the above individuals. You will receive a reply during normal business hours.

SUPPLEMENTARY INFORMATION: The exploration activities will be performed pursuant to the Mineral Leasing Act of 1920, as amended, 30 U.S.C. 201(b), and to the regulations at 43 CFR part 3410. The BLM regulations at 43 CFR 3410 require the publication of an invitation to participate in the coal exploration in the **Federal Register**. The purpose of the exploration program is to gain additional geologic knowledge of the coal underlying the exploration area for the purpose of assessing the coal resources. The exploration program is fully described and will be conducted pursuant to an exploration license and plan approved by the BLM. The exploration plan may be modified to accommodate the legitimate exploration needs of persons seeking to participate.

The Federal coal resources included in the exploration license application NDM 107286 are located in the following-described lands in North Dakota:

Fifth Principal Meridian, North Dakota

T141N, R83W,
Sec. 8, NW¼SE¼, S½SE¼;
Sec. 18, NE¼.
T141 N, R84W,
Sec. 24, SW¼.
The area described contains 440 acres.

The Federal coal within the lands described for exploration license application NDM 107286 is currently unleased for development of Federal coal reserves.

Authority: 43 CFR 3410.2–1(c)(1).

Phillip C. Perlewitz,

Chief, Branch of Solid Minerals.

[FR Doc. 2014–16228 Filed 7–10–14; 8:45 am]

BILLING CODE 4310–DN–P

DEPARTMENT OF THE INTERIOR

Bureau of Land Management

[LLCA930000–1430; CACA 007678]

Public Land Order No. 7826; Partial Revocation of Executive Orders Dated June 8, 1866, and September 10, 1902; California

AGENCY: Bureau of Land Management, Interior.

ACTION: Public land order.

SUMMARY: This order partially revokes approximately 12.97 acres of a withdrawal created by two Executive Orders that reserved land at Trinidad Head for use by the United States Coast Guard for lighthouse purposes. The United States Coast Guard no longer needs the reservation on this portion of land. This order returns administrative jurisdiction over this land back to the Bureau of Land Management (BLM).

DATE: *Effective Date:* July 11, 2014.

FOR FURTHER INFORMATION CONTACT: Elizabeth Easley, BLM California State Office, 2800 Cottage Way, Sacramento, CA 95825, 916–978–4673. Persons who use a telecommunications device for the deaf (TDD) may call the Federal Information Relay Service (FIRS) at 1–800–877–8339 to contact the above individual. The FIRS is available 24 hours a day, 7 days a week, to leave a message or question with the above individual. You will receive a reply during normal business hours.

SUPPLEMENTARY INFORMATION: The United States Coast Guard has determined that 12.97 acres of land withdrawn for the Trinidad Head Light Station in Humboldt County, California, is no longer needed for lighthouse purposes and the BLM has determined that the lands are suitable for return to the public domain. The United States Coast Guard will retain 1.08 acres of the original reservation which it continues to use for communication site purposes related to navigation.

Order

By virtue of the authority vested in the Secretary of the Interior by Section 204 of the Federal Land Policy and Management Act of 1976, 43 U.S.C. 1714, it is ordered as follows:

1. The withdrawal created by two Executive Orders dated June 8, 1866, and September 10, 1902, which reserved public land at Trinidad Head for lighthouse purposes, is hereby revoked insofar as it affects the following described land:

Humboldt Meridian

T. 8 N., R. 1 W.,

Sec. 26, lot 6.

The land described contains 12.97 acres Humboldt County.

2. At 8:30 a.m. on August 11, 2014, the land described in Paragraph 1 shall be opened to appropriation under the general land laws, except location and entry under the United States mining laws, subject to valid existing rights, the provisions of existing withdrawals, other segregations of record, and the requirements of applicable law.

Dated: June 18, 2014.

Janice M. Schneider,

Assistant Secretary—Land and Minerals Management.

[FR Doc. 2014–16229 Filed 7–10–14; 8:45 am]

BILLING CODE 4310–40–P

DEPARTMENT OF THE INTERIOR

Bureau Of Land Management

[LLAKF02000.L14300000.EQ0000; AKFF096399]

Notice of Realty Action; Non-Competitive Land Use Authorization of Public Lands in the Fairbanks North Star Borough, Alaska

AGENCY: Bureau of Land Management, Interior.

ACTION: Notice of realty action.

SUMMARY: The Bureau of Land Management (BLM) is considering the issuance of a permit for mineral exploration on lands withdrawn for use by the National Oceanic and Atmospheric Administration (NOAA). The proposal to conduct sampling associated with mineral assessment on the subject lands was provided by Fairbanks Gold Mining, Inc. (FGMI). The BLM has determined that the lands are suitable and available for issuance of a non-competitive permit for such purposes to FGMI under the authority of Section 302 of the Federal Land Policy and Management Act (FLPMA).

DATES: Comments must be received by the BLM Eastern Interior Field Office at the address below on or before August 11, 2014.

ADDRESSES: Send written comments concerning this notice to: Acting Field Office Manager, Bureau of Land Management, Eastern Interior Field Office, 1150 University Avenue, Fairbanks, AK 99709.

FOR FURTHER INFORMATION CONTACT: Michael Gibson, Acting Field Office Manager, Bureau of Land Management, Eastern Interior Field Office, at the above address, by telephone at 907–474–2263, or by email at *mjgibson@blm.gov*. Persons who use a telecommunication device for the deaf (TDD) may call the Federal Information Relay Service (FIRS) at 1–800–877–8339 to contact the individual. The FIRS is available 24 hours a day, 7 days a week to leave a message or a question with the above individual. You will receive a reply during normal business hours.

SUPPLEMENTARY INFORMATION: The proposed FLPMA Section 302 permit would be located within the following lands:

Fairbanks Meridian, Alaska

T. 2 N., R. 2 E.,

Sec. 7, SE¼SE¼;
Sec. 8, SW¼SW¼;
Sec. 17, W½, excepting lands described in Public Land Order 7763;
Sec. 18;
Sec. 19, lot 1;
Sec. 20, W½, W½E½ (partial), excepting lands described in Public Land Order 7682.

The areas described aggregate approximately 1,966 acres within the Fairbanks North Star Borough.

Although the subject lands are not covered by a BLM land use plan, the proposed mineral assessment activities are consistent with current and historic uses of BLM-managed lands in the area. The BLM has authorized similar mineral assessment activities on these lands in the past, and mining and mineral-related activities have been ongoing in this area for more than 100 years. No mineral assessment activities would take place on ground subject to valid existing rights pursuant to Public Land Order (PLO) 3708 (30 FR 8753, July 10,1965), as modified by PLO 6709 (54 FR 6919, February 15, 1989), and extended by PLO 7710 (73 FR 35708, June 24, 2008). The lands affected are adjacent to Fort Knox, one of the largest operating gold mines in Alaska.

In accordance with the requirements of PLO 3708, the BLM sought and received a letter of non-objection from NOAA stating that the mineral assessment activities proposed by FGMI will not interfere with the operation of its facilities so long as certain conditions identified by NOAA are incorporated into any permit.

The proposed mineral assessment activities are anticipated to impact approximately 25 acres over a 3-year period. Approximately 250 bore holes supporting the sampling would be drilled. Each drill site would require a drill pad approximately 2,400 square feet in size. Access would be provided by a combination of existing roads and trails and newly constructed trails 14 feet in width. Heavy equipment including caterpillars, low-boy transport trailers, and portable drill rigs would be utilized to take the samples.

Should a permit be issued, the permit would not authorize any activity under the authority of the Mining Law and will not authorize mineral development or extraction beyond that associated with assessment sampling. Disturbed lands would be reclaimed in accordance with BLM regulations and standards.

Pursuant to the regulations found in 43 CFR part 2920, BLM has determined that the public lands described above are available for issuance of a non-competitive permit to FGMI for mineral assessment purposes. The BLM will therefore accept an application filed by FGMI for such a permit under Section 302 of FLPMA. The BLM will complete an environmental analysis and make a decision regarding whether to deny or grant the application.

Detailed information relating to the permit process and environmental analysis will be available for review at the location identified in **ADDRESSES** above. Comments regarding the proposed non-competitive permit and the BLM's determination of the availability of the subject lands for the described use may be submitted in writing to the Acting Field Office Manager (see **ADDRESSES**, above) on or before August 11, 2014. All comments submitted will be evaluated by BLM's Eastern Interior Acting Field Office Manager prior to making a final decision on whether or not to authorize use of the subject lands for mineral assessment work.

Before including your address, phone number, email address or other personal identifying information (PII) in your comment, you should be aware that your entire comment may be made publically available at any time. While you may request that your PII be withheld from public review, we cannot guarantee that we will be able to do so.

Authority: 43CFR 2920.4.

Ted A. Murphy,

BLM Alaska Acting State Director.

[FR Doc. 2014–16227 Filed 7–10–14; 8:45 am]

BILLING CODE 4310–JA–P

DEPARTMENT OF THE INTERIOR

National Park Service

[NPS–WASO–NRNHL–16107; PPWOCRADI0, PCU00RP14.R50000]

National Register of Historic Places; Notification of Pending Nominations and Related Actions

Nominations for the following properties being considered for listing

or related actions in the National Register were received by the National Park Service before June 21, 2014. Pursuant to § 60.13 of 36 CFR Part 60, written comments are being accepted concerning the significance of the nominated properties under the National Register criteria for evaluation. Comments may be forwarded by United States Postal Service, to the National Register of Historic Places, National Park Service, 1849 C St. NW., MS 2280, Washington, DC 20240; by all other carriers, National Register of Historic Places, National Park Service, 1201 Eye St. NW., 8th Floor, Washington, DC 20005; or by fax, 202–371–6447. Written or faxed comments should be submitted by July 28, 2014. Before including your address, phone number, email address, or other personal identifying information in your comment, you should be aware that your entire comment—including your personal identifying information—may be made publicly available at any time. While you can ask us in your comment to withhold your personal identifying information from public review, we cannot guarantee that we will be able to do so.

Dated: June 27, 2014.

J. Paul Loether,

Chief, National Register of Historic Places/ National Historic Landmarks Program.

Alabama

Shelby County

Arkwright Historic District, Jct. of NS & CSX RRs., Cty. Rd. 62 & Florey St., Vincent, 14000453

Alaska

Ketchikan Gateway Borough-Census Area

Creek Street Historic District, Creek St., Married Man's Trail & Totem Way, Ketchikan, 14000454

Colorado

Las Animas County

Varros, Margarito, Homestead, Address Restricted, Kim, 14000455

Kentucky

Boone County

Kite, James William, Store, (Boone County, Kentucky MPS) 8800 E. Bend Rd., Burlington, 14000456

Bourbon County

Kiser, James, House, 41 E. Main St., Paris, 14000457

Jefferson County

Eastwood School, 610 Gilliland Rd., Louisville, 14000458

Kenton County

Ritte's East Historic District, CSX RR., Twin Oaks Golf Course, Winston, Decoursey & 40th Sts., Covington, 14000459

Mississippi

Hinds County

Smith Park Architectural District (Boundary Increase III and Additional Documentation), Roughly E. Capitol & E. Pearl between N. West & N. Lamar Sts., Jackson, 14000461

Montana

Powell County

MacDonald Pass Airway Beacon, US 12, Helena, 14000462

Nebraska

Antelope County

Kester Planing Mill, 212 Chestnut St., Neligh, 14000463

New Hampshire

Carroll County

Great Falls Manufacturing Company Newichawannock Canal Historic District, Address Restricted, Wakefield, 14000460

New Jersey

Bergen County

Fell–Ackerman–Cable–Taylor House, 475 Franklin Tpk., Allendale, 14000464

Monmouth County

Trinity Church, 503 Asbury Ave., Asbury Park City, 14000465

Pennsylvania

Chester County

Nantmeal Village Historic District, Extending from jct. of Nantmeal, Fairview, Horseshoe Trail & Coventryville Rds., East Nantmeal Township, 14000466

Dauphin County

Penn, William, Memorial Museum and State Archives Building, 300 North St., Harrisburg, 14000467

Lancaster County

Berger, John & Son, Company Tobacco Warehouse, 191 Broad St., East Hempfield Township, 14000468

Northampton County

Bangor Historic District, Roughly bounded by 3rd, Fairview & Pennsylvania Aves., Division, N. 4th, N. Main, Erdman, Northhampton, S. 1st Sts., Bangor Borough, 14000469

Philadelphia County

Ajax Metal Company Plant, 46 Richmond St., Philadelphia, 14000470

Ortlieb, Henry F., Company Bottling House, 829–51 N. American St., Philadelphia, 14000475

Texas

Comal County

Saint Joseph's Chapel, 6400 FM 482, Schertz, 14000472

Dallas County

Joffre–Gilbert House, 309 S. O'Connor Rd., Irving, 14000473

Zavala County

Crystal City Internment Camp, Roughly bounded by Airport Dr., Popeye Ln., N. 7th & N. 12th Aves., Crystal City, 14000474

[FR Doc. 2014–16179 Filed 7–10–14; 8:45 am]

BILLING CODE 4312–51–P

INTERNATIONAL TRADE COMMISSION

[Investigation Nos. 701–TA–506–508 and 731–TA–1238–1243 (Final)]

Non-Oriented Electrical Steel from China, Germany, Japan, Korea, Sweden, and Taiwan; Scheduling of the final phase of countervailing duty and antidumping duty investigations

AGENCY: United States International Trade Commission.

ACTION: Notice.

SUMMARY: The Commission hereby gives notice of the scheduling of the final phase of antidumping and countervailing duty investigation Nos. 701–TA–506–508 and 731–TA–1238–1243 (Final) under sections 705(b) and 731(b) of the Tariff Act of 1930 (19 U.S.C. 1671d(b) and 1673d(b)) (the Act) to determine whether an industry in the United States is materially injured or threatened with material injury, or the establishment of an industry in the United States is materially retarded, by reason of imports from China, Germany, Japan, Korea, Sweden, and Taiwan of non-oriented electrical steel, provided for in subheading 7225.19.00 and 7226.19.10, and 7226.19.90 of the Harmonized Tariff Schedule of the United States,[1] that are sold in the

[1] For purposes of these investigations, the Department of Commerce has defined the subject merchandise as ''non-oriented electrical steel (NOES), which includes cold-rolled, flat-rolled, alloy steel products, whether or not in coils, regardless of width, having an actual thickness of

Continued

United States at less than fair value and by reason of imports of non-oriented electrical steel that are subsidized by the Governments of China, Korea, and Taiwan.[2]

For further information concerning the conduct of this phase of the investigations, hearing procedures, and rules of general application, consult the Commission's Rules of Practice and Procedure, part 201, subparts A through E (19 CFR part 201), and part 207, subparts A and C (19 CFR part 207).

DATES: *Effective Date:* Thursday, July 2, 2014.

FOR FURTHER INFORMATION CONTACT: Edward Petronzio (202–205–3176), Office of Investigations, U.S. International Trade Commission, 500 E Street SW., Washington, DC 20436. Hearing-impaired persons can obtain information on this matter by contacting the Commission's TDD terminal on 202–205–1810. Persons with mobility impairments who will need special assistance in gaining access to the Commission should contact the Office of the Secretary at 202–205–2000. General information concerning the Commission may also be obtained by accessing its internet server (*http://www.usitc.gov*). The public record for these investigations may be viewed on the Commission's electronic docket (EDIS) at *http://edis.usitc.gov.*

SUPPLEMENTARY INFORMATION:

Background. The final phase of these investigations is being scheduled as a result of affirmative preliminary determinations by the Department of Commerce that certain benefits which constitute subsidies within the meaning of section 703 of the Act (19 U.S.C. 1671b) are being provided to manufacturers, producers, or exporters in China and Taiwan of non-oriented electrical steel, and that such products from China, Germany, Japan, Korea, Sweden, and Taiwan are being sold in the United States at less than fair value within the meaning of section 733 of the Act (19 U.S.C. 1673b).[3] The investigations were requested in a petition filed on September 30, 2013 by AK Steel Corp., West Chester, Ohio.

Although the Department of Commerce has preliminarily determined that imports of non-oriented electrical steel from Korea are not being and are not likely to be subsidized by the Government of Korea, for the purposes of efficiency the Commission hereby waives rule 207.21(b)[4] so that the final phase of the investigation may proceed concurrently in the event that Commerce makes a final affirmative determination with respect to such imports.

Participation in the investigations and public service list. Persons, including industrial users of the subject merchandise and, if the merchandise is sold at the retail level, representative consumer organizations, wishing to participate in the final phase of these investigations as parties must file an entry of appearance with the Secretary to the Commission, as provided in section 201.11 of the Commission's rules, no later than 21 days prior to the hearing date specified in this notice. A party that filed a notice of appearance during the preliminary phase of the investigations need not file an additional notice of appearance during this final phase. The Secretary will maintain a public service list containing the names and addresses of all persons, or their representatives, who are parties to the investigations.

Limited disclosure of business proprietary information (BPI) under an administrative protective order (APO) and BPI service list. Pursuant to section 207.7(a) of the Commission's rules, the Secretary will make BPI gathered in the final phase of these investigations available to authorized applicants under the APO issued in the investigations, provided that the application is made no later than 21 days prior to the hearing date specified in this notice. Authorized applicants must represent interested parties, as defined by 19 U.S.C. 1677(9), who are parties to the investigations. A party granted access to BPI in the preliminary phase of the investigations need not reapply for such access. A separate service list will be maintained by the Secretary for those parties authorized to receive BPI under the APO.

Staff report. The prehearing staff report in the final phase of these investigations will be placed in the nonpublic record on Tuesday, September 23, 2014, and a public version will be issued thereafter, pursuant to section 207.22 of the Commission's rules.

Hearing. The Commission will hold a hearing in connection with the final phase of these investigations beginning at 9:30 a.m. on Wednesday, October 8, 2014, at the U.S. International Trade Commission Building. Requests to appear at the hearing should be filed in writing with the Secretary to the Commission on or before Thursday, October 2, 2014. A nonparty who has testimony that may aid the Commission's deliberations may request permission to present a short statement at the hearing. All parties and nonparties desiring to appear at the hearing and make oral presentations should attend a prehearing conference to be held at 9:30 a.m. on Monday, October 6, 2014, at the U.S. International Trade Commission Building. Oral testimony and written materials to be submitted at the public hearing are governed by sections 201.6(b)(2), 201.13(f), and 207.24 of the Commission's rules. Parties must submit any request to present a portion of their hearing testimony *in camera* no later than 7 business days prior to the date of the hearing.

Written submissions. Each party who is an interested party shall submit a prehearing brief to the Commission. Prehearing briefs must conform with the

0.20 mm or more, in which the core loss is substantially equal in any direction of magnetization in the plane of the material. The term ''substantially equal'' means that the cross grain direction of core loss is no more than 1.5 times the straight grain direction (i.e., the rolling direction) of core loss. NOES has a magnetic permeability that does not exceed 1.65 Tesla when tested at a field of 800 A/m (equivalent to 10 Oersteds) along (i.e., parallel to) the rolling direction of the sheet (i.e., B800 value). NOES contains by weight more than 1.00 percent of silicon but less than 3.5 percent of silicon, not more than 0.08 percent of carbon, and not more than 1.5 percent of aluminum. NOES has a surface oxide coating, to which an insulation coating may be applied.

NOES is subject to these investigations whether it is fully processed (i.e., fully annealed to develop final magnetic properties) or semi-processed (i.e., finished to final thickness and physical form but not fully annealed to develop final magnetic properties). Fully processed NOES is typically made to the requirements of ASTM specification A 677, Japanese Industrial Standards (JIS) specification C 2552, and/or International Electrotechnical Commission (IEC) specification 60404–8–4. Semi-processed NOES is typically made to the requirements of ASTM specification A 683. However, the scope of these investigations is not limited to merchandise meeting the ASTM, JIS, and IEC specifications noted immediately above.

NOES is sometimes referred to as cold-rolled non-oriented (CRNO), non-grain oriented (NGO), non-oriented (NO), or cold-rolled non-grain oriented (CRNGO) electrical steel. These terms are interchangeable.

Excluded from the scope of these investigations are flat-rolled products not in coils that, prior to importation into the United States, have been cut to a shape and undergone all punching, coating, or other operations necessary for classification in Chapter 85 of the Harmonized Tariff Schedule of the United States (HTSUS) as a part (i.e., lamination) for use in a device such as a motor, generator, or transformer.''

[2] The Department of Commerce has preliminarily determined that countervailing subsidies are not being provided to producers and exporters of non-oriented electrical steel from the Government of Korea.

[3] In addition to making its preliminary countervailing duty determinations on non-oriented electrical steel from China, Korea, and Taiwan, the Department of Commerce simultaneously announced the alignment of the final countervailing duty determinations with its final determinations in the companion antidumping duty investigations.

[4] Section 207.21(b) of the Commission's rules provides that, where the Department of Commerce has issued a negative preliminary determination, the Commission will publish a Final Phase Notice of Scheduling upon receipt of an affirmative final determination from Commerce.

provisions of section 207.23 of the Commission's rules; the deadline for filing is Tuesday, September 30, 2014. Parties may also file written testimony in connection with their presentation at the hearing, as provided in section 207.24 of the Commission's rules, and posthearing briefs, which must conform with the provisions of section 207.25 of the Commission's rules. The deadline for filing posthearing briefs is Thursday, October 16, 2014. In addition, any person who has not entered an appearance as a party to the investigations may submit a written statement of information pertinent to the subject of the investigations, including statements of support or opposition to the petition, on or before Thursday, October 16, 2014. On Wednesday, October 29, 2014, the Commission will make available to parties all information on which they have not had an opportunity to comment. Parties may submit final comments on this information on or before Friday, October 31, 2014, but such final comments must not contain new factual information and must otherwise comply with section 207.30 of the Commission's rules. All written submissions must conform with the provisions of section 201.8 of the Commission's rules; any submissions that contain BPI must also conform with the requirements of sections 201.6, 207.3, and 207.7 of the Commission's rules. The Commission's *Handbook on E-Filing,* available on the Commission's Web site at *http://edis.usitc.gov,* elaborates upon the Commission's rules with respect to electronic filing.

Additional written submissions to the Commission, including requests pursuant to section 201.12 of the Commission's rules, shall not be accepted unless good cause is shown for accepting such submissions, or unless the submission is pursuant to a specific request by a Commissioner or Commission staff.

In accordance with sections 201.16(c) and 207.3 of the Commission's rules, each document filed by a party to the investigations must be served on all other parties to the investigations (as identified by either the public or BPI service list), and a certificate of service must be timely filed. The Secretary will not accept a document for filing without a certificate of service.

Authority: These investigations are being conducted under authority of title VII of the Tariff Act of 1930; this notice is published pursuant to section 207.21 of the Commission's rules.

Issued: July 8, 2014.

By order of the Commission.

Jennifer D. Rohrbach,

Supervisory Attorney.

[FR Doc. 2014–16253 Filed 7–10–14; 8:45 am]

BILLING CODE 7020–02–P

DEPARTMENT OF JUSTICE

Notice of Lodging of Proposed Consent Decree Under the Comprehensive Environmental Response, Compensation, and Liability Act

On July 7, 2014, the Department of Justice lodged a proposed Consent Decree with the United States District Court for the District of Colorado, in the lawsuit entitled *United States* v. *Thoro Products Company,* Civil Action No. 1:14–cv–01867.

The Consent Decree resolves the claims of the United States set forth in the complaint against Thoro Products Company for costs incurred and to be incurred in connection with the Twins Inn Superfund Site, located in Arvada, Colorado (the ''Site''), pursuant to Section 107 of the Comprehensive Environmental Response, Compensation, and Liability Act (''CERCLA''), 42 U.S.C. § 9607. Under the Consent Decree, the settling defendant agrees to reimburse $400,000 in past costs to the United States Environmental Protection Agency, based upon its limited ability to pay.

The publication of this notice opens a period for public comment on the Consent Decree. Comments should be addressed to the Assistant Attorney General, Environment and Natural Resources Division, and should refer to *United States* v. *Thoro Products Company,* D.J. Ref. No. 90–11–2–08744. All comments must be submitted no later than thirty (30) days after the publication date of this notice. Comments may be submitted either by email or by mail:

To submit comments:	*Send them to:*
By email	*pubcomment-ees.enrd@usdoj.gov.*
By mail	Assistant Attorney General, U.S. DOJ–ENRD, P.O. Box 7611, Washington, DC 20044–7611.

During the public comment period, the Consent Decree may be examined and downloaded at this Justice Department Web site: *http://www.usdoj.gov/enrd/Consent_Decrees.html.* We will provide a paper copy of the Consent Decree upon written request and payment of reproduction costs. Please mail your request and payment to: Consent Decree Library, U.S. DOJ–ENRD, P.O. Box 7611, Washington, DC 20044–7611.

Please enclose a check or money order for $13.25 (25 cents per page reproduction cost) payable to the United States Treasury. For a paper copy without the appendices and signature pages, the cost is $6.75.

Robert Brook,

Assistant Section Chief, Environmental Enforcement Section, Environment and Natural Resources Division.

[FR Doc. 2014–16182 Filed 7–10–14; 8:45 am]

BILLING CODE 4410–15–P

DEPARTMENT OF JUSTICE

Drug Enforcement Administration

[Docket No. 11–72]

Moore Clinical Trials, L.L.C.; Decision and Order

On August 8, 2011, the Deputy Assistant Administrator, Office of Diversion Control, Drug Enforcement Administration, issued an Order to Show Cause to Moore Clinical Trials, L.L.C. (Respondent), of North Little Rock, Arkansas. The Show Cause Order proposed the denial of Respondent's application for a DEA Certificate of Registration as a researcher, on the ground that ''its registration would be inconsistent with the public interest.'' ALJ Ex. 1, at 1 (citing 21 U.S.C. 823(f)).

The Show Cause Order alleged that on March 15, 2011, Ms. Greta B. Moore submitted on Respondent's behalf, an ''application for a DEA research registration for [s]chedule II controlled substances.'' *Id.* The Show Cause Order alleged that while Ms. Moore would be the primary person responsible for ordering and storing controlled substances, she ''has no prior experience with handling controlled substances.'' *Id.* (citing 21 U.S.C. 823(f)(2)). The Show Cause Order then alleged that ''Ms. Moore initially informed DEA investigators that she had experience researching with controlled substances but then admitted this assertion was not true.'' *Id.* (citing 21 U.S.C. 823(f)(5)).

Next, the Show Cause Order alleged that ''[t]he only DEA registered physician that plans to work at [Respondent] will have very limited hours and contact with'' it. *Id.* at 2. The Show Cause Order further alleged that ''[i]n 2006, the Arkansas State Medical Board suspended this physician's medical license because . . . he . . . pre-signed controlled substance

prescriptions, which were issued by his staff,'' and that ''[i]n 2008, [he] was convicted of one count of Medicare fraud'' in federal district court and subsequently ''excluded . . . from participating in the Medicare programs as required by 42 U.S.C. 1320a–7(a).'' *Id.* (citing 21 U.S.C. 823(f)(5)).

Finally, the Show Cause Order alleged that the State of Arkansas ''has not granted [Respondent's] application for a research license,'' and that Respondent ''is currently without authority to handle controlled substances in the State . . . in which [it] has applied for a DEA . . . registration.'' *Id.* The Order thus alleged that ''DEA must deny [its] application based upon its lack of authority to handle controlled substances in the State of Arkansas.'' *Id.* (citing 21 U.S.C. 823(f)(1)).

On August 26, 2011, Respondent, through its owner Ms. Moore, requested a hearing on the allegations, ALJ Ex. 2, and the matter was placed on the docket of the Office of Administrative Law Judges (ALJ). Thereafter, the Government moved for summary disposition on the ground that Respondent did not possess the requisite Arkansas researcher's license and therefore could not be registered pursuant to 21 U.S.C. 823(f); the Government's motion was supported by a letter from the Deputy General Counsel of the Arkansas Department of Health stating that Respondent's application for a state license had not been granted. ALJ Ex. 3.

Respondent opposed the Government's motion, contending that it possesses a temporary Arkansas license authorizing it to handle controlled substances.[1] ALJ Ex. 4, at 4. The Government then filed a reply to the Respondent's opposition and included a further letter from the aforementioned official, which again stated that Respondent did not possess a valid state license but had been issued a temporary state registration number in order to allow it to complete its DEA application. ALJ Ex. 4, at 4–5. Thereafter, the ALJ found that there was no dispute over the material fact ''that Respondent is presently without state authority to handle controlled substances in Arkansas.'' *Id.* at 8–9. The ALJ thus granted the Government's motion and forwarded the then-existing record to me for final agency action. *Id.* at 12.

On April 16, 2012, while the matter was still pending before this Office, the Government filed a motion to remand the case, noting that on March 12, 2012, Respondent obtained a state controlled-substance registration. ALJ Ex. 6, at 1. The Government observed, however, that it had raised ''additional allegations under 21 U.S.C. 823(f) to deny [Respondent's] application'' and that an evidentiary hearing was required to litigate them. Gov. Mot. to Remand, at 1. In opposition, Respondent contended that a hearing was no longer required because the Government had ''abandoned'' its other claims by seeking summary disposition and that ''[t]he re-litigation of these issues following the [ALJ's] Order on the Government's Summary Judgment Motion would be akin to *res judicata.*'' Response of Moore Clinical Trials LLC To The Government's Motion To Remand, at 1–2. On June 4, 2012, I found neither of Respondent's contentions persuasive and granted the Government's motion to remand the matter to the ALJ ''for further proceedings.'' *Id.* at 2–3.

Thereafter, on June 22, 2012, the Government filed a second motion for summary disposition. ALJ Ex. 7. Therein, the Government asserted that while Respondent ''had planned to hire a DEA registered physician, Brian T. Nichol, M.D., . . . to administer and dispense the controlled substances to the research subjects,'' it was its ''understanding that [Respondent] now would not be hiring Dr. Nichol.'' *Id.* at 2. The Government further argued that under Arkansas law, Respondent ''cannot operate until and unless there is an authorized licensed physician in the State . . . who will be hired by [it] to administer and dispense the controlled substance that [it] seeks to use in its research facility.'' *Id.* at 3. The Government thus contended that because Respondent ''does not have such a person who will serve in this capacity . . . [its] DEA application should be summarily denied.'' *Id.* The Government did not, however, offer any evidence to support the factual premise of its motion.

Respondent opposed the motion (although here again, the ALJ failed to forward its filing), contending that it had entered into a contract with Dr. Nichol (more precisely, his entity, Brinch Clinical Research), to provide a licensed physician to administer or dispense the controlled substances to the research subjects. ALJ Ex. 8 (citing Respondent's Response, at 1–2). In contrast to the Government, Respondent provide evidence to support is contention, specifically, a copy of its contract with Dr. Nichol's entity. *Id.* at 2.

On July 6, 2012, the ALJ denied the Government's motion, finding that ''there is a genuine dispute of material fact regarding Dr. Nichol's employment with [Respondent] as the physician assigned to this research project.'' ALJ Ex. 8, at 2. However, ''because the Government asserts additional material factual allegations regarding Respondent's application for a DEA registration, allegations which the Respondent vigorously disputes,'' the ALJ set the matter for hearing. *Id.*

Following additional pre-hearing procedures, on September 19–21, 2012, the ALJ conducted a hearing in Little Rock, Arkansas. Recommended Rulings, Findings of Fact, Conclusions of Law, and Decision of the Administrative Law Judge (hereinafter, Recommended Decision or R.D.), at 5. At the hearing, both parties called witnesses to testify and submitted various documents for the record. Following the hearing, both parties filed briefs containing their proposed findings of fact, conclusions of law, and arguments.[2]

On November 30, 2012, the ALJ issued her Recommended Decision. Therein, the ALJ reviewed the evidence with respect to the five public interest factors. *See* R.D. at 25–35. With respect to factor one—the recommendation of the appropriate state licensing board—the ALJ found that the State of Arkansas ''has granted the Respondent a temporary controlled substance registration.'' R.D. at 26. The ALJ thus concluded that while this factor is ''not dispositive,'' because ''[t]he ultimate responsibility to determine whether a registration is consistent with the public interest has been delegated exclusively to the DEA'' and not to state officials, the ALJ found that ''Respondent meets that requirement for gaining a DEA registration.'' *Id.* (citing *Edmund Chein, M.D.,* 72 FR 6580, 6590 (2007), *pet. for rev. denied, Chein* v. *DEA,* 533 F.3d 828 (D.C. Cir. 2008)).

Likewise, with respect to factor three—Respondent's record of convictions for offenses relating to the manufacture, distribution, and dispensing of controlled substances—the ALJ found that there was no evidence that Respondent has been convicted of such an offense. *Id.* at 27. However, the ALJ further noted that ''[w]hile this factor may support the

[1] Notably, in forwarding the record to this Office, the ALJ failed to include the Respondent's opposition to the Government's motion. In addition, numerous other filings were not initially forwarded to this Office, including the parties' pre-hearing statements, motions and oppositions related to various rejected exhibits, as well as the ALJ's order excluding these exhibits. Accordingly, I ordered the ALJ to forward these documents to me. Given that proper review of the record requires that the entire record be forwarded to this office for review, these filings should have been designated as ALJ Exhibits and forwarded as part of the record.

[2] Each party's brief is cited as Gov. Br. or Resp. Br.

granting of Respondent's application . . . [i]t is not dispositive [of] the public interest determination.'' *Id.* at 27–28 (citing *Morris W. Cochran,* 77 FR 17505, 17517 (2012)).

As for factor two—the applicant's experience in dispensing or conducting research with respect to controlled substances—the ALJ noted that under Agency precedent, both an applicant's lack of relevant experience and an applicant's having ''previously poorly handled controlled substances'' provide grounds to deny an application. R.D. at 26 (citing cases). The ALJ then found that ''the parties do not dispute that Ms. Moore lacks experience in handling controlled substances in a research project'' and that ''[s]he freely admitted that she is unfamiliar with the documentary requirements for the maintenance of inventories and other accountability purposes.'' R.D. at 27. The ALJ thus found that ''this lack of experience weighs against granting her a DEA registration to handle controlled substances.'' *Id.*

However, the ALJ then noted that ''Ms. Moore has extensive clinical research experience,'' including ''experience maintaining documents necessary for such research accountability.'' *Id.* While finding that ''the record contains no evidence of her success,'' the ALJ found ''the fact that AstraZeneca granted her a research project indicative of her documented experience at least to their satisfaction for purposes of this study.'' *Id.* And while finding that ''Ms. Moore has struggled to create a form document that will capture the facts necessary for an accountability audit,'' the ALJ then found that ''the record amply demonstrates her willingness to become compliant.'' *Id.* The ALJ then offered the conclusion, which she herself deemed ''speculative,'' that ''[w]ith training, [Ms. Moore] should be able to convert her research-required recordkeeping system into one compliant with DEA requirements.'' *Id.* While the ALJ ''recommend[ed] that Ms. Moore take a course in the handling of controlled substances by researchers,'' she did not make an explicit finding as to whether this factor supported either the granting or denial of Respondent's application. *Id.*

Turning to factor four—the applicant's compliance with applicable laws related to controlled substances—the ALJ noted that registrants who dispense controlled substances must comply with a number of statutes and regulations, including various registration, recordkeeping and security requirements. *Id.* at 28 (citations omitted). Moreover, the ALJ found that ''Ms. Moore signed for a shipment of [a] controlled substance when she was not registered to do so,'' and that ''[s]uch handling of controlled substances without a registration is a violation of DEA statutory and regulatory provisions.'' *Id.* at 29 (citing 21 CFR 1301.13(a)).

The ALJ also found that ''the documents kept by Dr. Nichol,'' who was supervising the two clinical trials on behalf of Respondent, ''were deficient'' and that the order forms for Schedule II controlled substances (DEA–222) ''were lacking.'' *Id.* The ALJ also found that ''Dr. Nichol transported controlled substances to the Respondent's location,'' where he was not registered to dispense them. *Id.* (citing 21 U.S.C. 822(e)). However, the ALJ declined ''to impute Dr. Nichol's errors to the Respondent,'' reasoning that while Nichol was an independent contractor, he did not act as Respondent's agent because ''Respondent's business is not meant to exercise control over the doctor's medical judgment nor is the Respondent meant to be primarily responsible for the research and recordkeeping.'' *Id.* at 31. In support of her conclusion, the ALJ further explained that ''Respondent does not even pay Dr. Nichol for his service in conducting research at Respondent's place of business, but[ ] rather[,] Dr. Nichol's payment is a 'pass-through' system of payment in which the Respondent pays [him] once [it] receives funds from the Sponsoring Organization.'' *Id.*

The ALJ thus reasoned that Dr. Nichol is not Respondent's agent ''because the Respondent does not exercise any control over Dr. Nichol's work; rather, the Respondent only offers Dr. Nichol a facility in which to conduct research.'' *Id.* at 32. Based on this conclusion, the ALJ declined to impute to Respondent what she characterized as ''the alleged wrongdoing of Dr. Nichol regarding the transporting and dispensing of the controlled substances at Respondent's location.'' *Id.*

''Although [she did] not attribute the past wrongdoings of Dr. Nichol to the Respondent, [the ALJ] recognize[d] the Respondent's responsibility in needing to maintain proper records.'' *Id.* (citing *United States* v. *Clinical Leasing Service, Inc.,* 759 F. Supp. 310, 312 (E.D. La. 1990)). However, the ALJ then explained that ''there has been no evidence placed in the record of Respondent's recordkeeping'' and that the ''[t]he records that were produced were Dr. Nichol's records.'' *Id.* at 33. Thus, while the ALJ found that the evidence is clear that Nichol's records did not comply with the Controlled Substances Act or DEA regulations, ''the shortcomings of these records are attributable to him'' and not Respondent. *Id.* The ALJ thus reasoned that while ''Respondent has failed to maintain its own recordkeeping system, it cannot be held responsible for all of the noncompliant actions of Dr. Nichol'' and that ''Nichol's failure to meet his responsibilities as a registrant is not a basis for refusing to grant the Respondent a researcher registration.'' *Id.*

As for factor five—such other conduct which may threaten public health and safety—the ALJ noted that DEA has consistently held that an applicant's candor during an investigation and failure to accept responsibility for its misconduct are '''important factor[s] when assessing whether a . . . registration is consistent with the public interest.''' *Id.* at 34 (quoting *Jeri Hassman, M.D.,* 75 FR 8194, 8236 (2010), *pet. for rev. denied, Hassman* v. *DEA,* No. 10–70684, slip. op. at 4 (9th Cir., Apr. 9, 2013)). In this regard, the ALJ ''acknowledge[d] that, from the Diversion Investigators' points of view, Ms. Moore appeared to change her position on her research experience and her experience [in] handling controlled substances.'' *Id.* Also, the ALJ found that Ms. Moore ''also vacillated in her testimony concerning where the controlled substance was actually dispensed.'' *Id.* The ALJ then explained that ''[t]his lack of candor may weigh against her being granted a DEA registration.'' *Id.*

As for whether Ms. Moore had accepted responsibility, the ALJ reasoned that while the ''[t]he record is filled with wrongdoing done by Dr. Nichol, . . . his wrongdoing is not imputed to the Respondent,'' and that ''[e]xcept for Ms. Moore's signing for the receipt of one shipment of the controlled substance, . . . the Government has not cited to any regulatory or statutory provision resulting in a finding of wrongdoing done by the Respondent.'' *Id.* at 34–35. While the ALJ agreed with the Government's contention ''that Ms. Moore did not express any remorse for this wrongdoing,'' she ''disagree[d] that this one incident is enough to deny the Respondent a DEA registration.'' *Id.* at 35.

The ALJ thus ''conclude[d] that the Government has proven that the Respondent lacks experience in handling controlled substances as a researcher,'' and that while ''in the past, this has served as a basis for denying a DEA registration. . . . Respondent clearly has experience in conducting drug research.'' *Id.* The ALJ then

observed that there was no evidence that ''Respondent's proposed business plan is a sham or an excuse to gain access to controlled substances for unlawful purposes.'' *Id.* The ALJ thus ''recommend[ed] that the Respondent's application be granted'' subject to the condition that ''Ms. Moore should be required to take a course in the handling of controlled substances for researchers.'' *Id.* at 36. The ALJ further explained that ''[i]n this way she will have the knowledge necessary to both maintain the records required, and to interview future researcher registrants to ensure they have the requisite knowledge and experience to handle controlled substances in a research environment.'' *Id.*

The Government filed exceptions to the ALJ's Recommended Decision. Thereafter, the ALJ initially forwarded the transcript and exhibits, along with various filings, orders, and rulings (ALJ Exs. 1–10) to me. Thereafter, I issued an order for the ALJ to submit the rest of the record; on July 24, 2013, the ALJ complied.

Having considered the record evidence, I have decided to reject the ALJ's Recommended Decision. While I adopt the ALJ's findings of fact and conclusions of law with respect to factors one and three, I reject her legal conclusion that Respondent is not liable for Dr. Nichol's misconduct in dispensing controlled substances at its Office, where Dr. Nichol was not registered (and when Respondent was not registered). Moreover, I also conclude that Respondent is liable for failing to maintain records which comply with the CSA. Because Ms. Moore (on behalf of Respondent) has not acknowledged its misconduct in allowing Nichol to dispense from an unregistered location and failing to keep compliant records, I reject the ALJ's implicit conclusion that Respondent's registration is consistent with the public interest. While I agree with the ALJ that upon taking an appropriate course, Ms. Moore may be able to demonstrate her ability to properly comply with controlled substance laws and regulations, I will not grant Respondent's application absent Ms. Moore's acknowledgement of her wrongdoing. I make the following findings of fact.

Findings

Respondent is a limited liability company; its owner and Chief Executive Officer is Ms. Greta B. Moore. GXs 1; 9; 10, at 2; Tr. 48. On March 12, 2012, the Arkansas Department of Health, Pharmacy Services, issued Respondent a temporary certificate for an Arkansas Controlled Substances Registration. RX 19. According to the certificate, this license was good for a period of six months and was due to expire on September 12, 2012. *Id.* While Ms. Moore testified that her license had been extended for ninety days, Tr. 505, the record (as forwarded by the ALJ) contained no evidence as to whether this license remains current.

Accordingly, I issued an order directing Respondent to submit evidence that it retains authority under Arkansas law to conduct research with respect to controlled substances. Order (July 16, 2013). On July 26, 2013, Respondent submitted an email from an official with the Arkansas Department of Health stating that its state registration was extended until December 31, 2013. Email from Marci Middleton-Yates to Greta Moore (July 26, 2013).

On March 15, 2011, Ms. Moore submitted an application on behalf of Respondent for a DEA Certificate of Registration as a researcher in schedules II through V, with the proposed registered location of 3508 JFK Blvd., Suite 1, North Little Rock, Arkansas. GX 1. However, in July 2012, Respondent moved its office to 7510 Highway 107, Sherwood, Arkansas. RX 26.

Between September 1989 and March 1997, Ms. Moore worked as a respiratory therapist. RX 1, at 2; Tr. 374–75. However, as the ALJ found, Ms. Moore's duties ''did not include keeping controlled substance records, and she had very limited experience handling controlled substances.'' R.D. at 6. More recently, from October 2007 through December 2007, Ms. Moore worked as a Clinical Research Coordinator for Research Solutions, L.L.C., which was managing clinic trials for a Dr. Derek Lewis. RX 1, at 1–2. Ms. Moore's duties included the recruitment, retention, and randomization of patients. Tr. 371.

Thereafter, Dr. Lewis decided to no longer use Research Solutions and hired Ms. Moore as his site manager. *Id.* at 372. Ms. Moore was involved in managing some thirty clinical trials before she was fired.[3] *Id.* at 377, 517–18. However, none of these trials involved controlled substances. *See* RX 1, at 3–5.

Subsequently, Ms. Moore decided to open her own business to provide clinical research services and formed Respondent. Tr. 373. According to Ms. Moore, her business is to ''talk with the doctor to determine what the doctor needs'' and ''put together a program that will help the doctor's clinical research programs,'' or to ''be a full-service company, whereby a doctor can come into our site and perform studies in our site, using our resources comparatively.'' *Id.* at 381. Ms. Moore further explained that ''[s]ome doctors like to keep their clinic practice and their clinical research practice separate,'' and that ''[e]ven when a doctor is doing clinical research in his office or his practice, what you would generally find is that the clinical research practice is a total [sic] separate entity'' and that ''[t]he staff is totally different.'' *Id.* at 383. Ms. Moore also explained that while the doctors ''do the medical things that patients need,'' unless the ''doctor is solely doing research . . . most of the recordkeeping is going to be done by the coordinator.'' *Id.* at 384–85. Ms. Moore then asserted that ''[u]ltimately the doctor is totally responsible for the clinical research study.'' *Id.*

Ms. Moore also denied that she allowed anyone who was not licensed to dispense at Respondent, stating ''[w]e don't dispense. We do accountability. For instance, if a patient brings back the drug, then we are responsible to document return[ed] tablets and things like that.'' *Id.* at 386.

Ms. Moore proceeded to market Respondent to contract research organizations (CROs), which are firms that drug manufacturers contract with to provide support services for clinical trials. *Id.* at 386, 389. In the meantime, Respondent entered into a contract with Dr. Brian Nichol, an interventional pain management specialist, to perform clinical research for it pursuant to contracts it might obtain from CROs. *Id.* at 387; GX 10.

At some point in late 2010 or early 2011, Respondent received information that Quintiles, a CRO, was managing clinical trials of the drug Naloxol 6a-methoxyhepta(ethylene glycol) ether (hereinafter, NKTR–118), for AstraZeneca, a large pharmaceutical manufacturer.[4] Tr. 387–90; GX 9. NKTR–118 is, however, a schedule II controlled substance. Tr. 266; RX 9.

Respondent applied to Quintiles to participate in the study and was selected by the latter for a site visit which occurred on February 15, 2011. RX 3, at 1. During the visit, the Quintiles representative discussed with Dr. Nichol, Ms. Moore, and Kianna Marshall (Respondent's research project

[3] Ms. Moore testified that she was not fired directly by Dr. Lewis but by Dr. Lewis' subordinates. Tr. 517–18. She further testified that she never learned the reason for her dismissal and the record contains no evidence on the issue. Tr. 518.

[4] The name of the study was: ''An Open-Label 52-week Study to Assess the Long-Term Safety of NKTR–118 in Opioid-Induced Constipation (OIC) in patients with Non-Cancer-Related Pain.'' RX 14, at 1.

coordinator, *see* GX 9, at 1) ''the protocol, . . . investigational product storage, [the] document storage areas, lab area, patient exams rooms, and monitoring areas.'' RX 4, at 1. The Quintiles representative further advised Dr. Nichol and Ms. Moore of other requirements for participating in the study, including that ''[t]he site must obtain a DEA license for research with a controlled substance'' and provided ''[i]nformation for obtaining this license'' to Ms. Moore. *Id.* Moreover, Ms. Moore testified that during the meeting with the Quintiles representative,

> we were told that the drug had been scheduled by the DEA as a controlled II substance, and we were also told that the pharma does not believe that their drug has the properties of a controlled II substance, but based on the scheduling, then the sites would need a DEA license.

Tr. 400.

On March 30, 2011, Respondent (who was designated as the ''Institution'') and Dr. Nichol (who was designated as the ''Investigator'') entered into a Clinical Trial Agreement (CTA) with Quintiles, to participate in the NKTR–118 long-term safety study, with Quintiles acknowledging its agreement on April 5. RX 14, at 1–2, 16. The CTA's terms required, *inter alia,* that ''Institution, Investigator and their personnel shall perform the Study *at Institution's facility* according to the Protocol and this Agreement, and shall comply with all: (i) Applicable local, state and federal laws and regulations relating to the conduct of the Study.'' *Id.* at 2 (emphasis added). In addition, Respondent and Dr. Nichol:

> each represent[ed], warrant[ed] and promise[d] that . . . Institution and the Investigator have, at all times during the course of the Study, the appropriate licenses, approvals and certifications necessary to safely, adequately and lawfully perform the Study in accordance with good clinical practice, FDA requirements and all Applicable Laws and have no notice of any investigations that would jeopardize such licenses, approvals or certifications[.]

Id. at 2.[5]

As stated above, on March 14, 2011, Ms. Moore applied on Respondent's behalf for a DEA researcher's registration. GX 1. On March 31, 2011, a DEA Diversion Investigator (DI) with the Little Rock District Office sent Ms. Moore a list of various items of information that she should have available during the on-site inspection, RX 7, at 2; and on April 14, 2011, two DIs went to Respondent's then-location to conduct a pre-registration investigation. Tr. 31. The DIs determined that Respondent's facility was located on the ground floor of an office building, and that while the entire building had an alarm system, if another tenant turned off the alarm or left the building without turning the alarm on, the building would not be secure. Tr. 158–59. However, in response to the DIs' concerns, Ms. Moore installed an alarm in her office. *Id.* at 159–60.

During the visit, the DIs interviewed Ms. Moore, who told them that the proposed research involved studying the safety of NKTR–118 for use on patients with opiate-induced constipation. Tr. 266. Ms. Moore told the DIs that the drug would be supplied by Fisher Clinical Services and stated that Respondent had a contract with Fisher to provide the drug; however, when asked to provide the contract, Ms. Moore could not do so. *Id.* at 267. Ms. Moore also told the DIs that Dr. Brian Nichol ''would be the principal investigator.'' *Id.* at 297. A DI who conducted the inspection testified that it was her understanding that Ms. Moore and Ms. Marshall ''would dispense the drugs'' and that Dr. Nichol ''would come into the clinic approximately two to three times a week and basically review the charts and do the patient evaluations.'' *Id.* at 298.

At the conclusion of the interview, the Senior DI provided Ms. Moore with a copy of the Code of Federal Regulations. *Id.* at 274. She also reviewed the recordkeeping requirements of Part 1304, as well as the requirements pertaining to the ordering of schedule II controlled substances under Part 1305. *Id.*

On April 21, 2011, Ms. Moore sent a letter by fax to the Senior DI, stating that Respondent had installed ''an in suite alarm.'' RX 12. On April 27 (following a phone conversation two days earlier), Ms. Moore sent an email to the DI explaining that Respondent had met all requirements; Ms. Moore also wrote that it was ''not required to have any site license(s) to conduct human subject research.'' RX 13, at 1. Ms. Moore further noted that the DI had told her that the DI's ''superior had a couple of questions regarding our application'' and advised that ''if there are more questions please email me.'' *Id.* Following additional emails sent by Ms. Moore on April 29 and May 4, 2011 asking the DI if there were ''[a]ny further requirements,'' on May 6, the DI wrote Ms. Moore that she ''need[ed] a copy of your signed contract with Fisher for further review of your application.'' RX 13, at 1–2. Ms. Moore then emailed the Quintiles representative who had performed the February on-site visit, asking if she had a copy of the Fisher contract; the Quintiles Representative agreed to ''get right on this.'' RX 13, at 3.

Less than a week later, Ms. Moore emailed the DI regarding the issue and discussed a phone conversation the DI had with another representative of Quintiles, who explained that Respondent did not have a contract with Fisher but rather with Quintiles. RX 15, at 1. Ms. Moore then stated that the Quintiles representative had advised her to send a copy of Respondent's contract with Quintiles, as well as a letter from the FDA's Controlled Substance Staff to Astra Zeneca. *Id.* Ms. Moore testified that she sent these documents as an attachment to the email. Tr. 450. Ms. Moore further wrote that ''[i]f I have not proceeded properly, or additional information is needed please let me know as soon as possible, as time is of the essence.'' RX 15, at 1. *Id.* In response, the DI asked Ms. Moore to come to the DEA office ''to discuss further details regarding [the] application. *Id.* at 2.

On May 16, Ms. Moore went to the DEA Office and met with the two DIs who had made the onsite inspection and the Diversion Group Supervisor (GS). Tr. 32–33. According to the GS, she was concerned as to whether Ms. Moore was qualified to be a researcher ''because she did not have MD, DO or Ph.D. behind her name'' and ''didn't know what kind of qualifications, training, or experience she had.'' *Id.* at 34. The GS testified that she checked the registration database to see ''if DEA had granted any other registrations to persons who were not licensed in that fashion,'' *id.* at 34–35, ''printed out all of Fisher's customers,'' *id.* at 39, and determined that they were generally medical doctors, doctors of osteopathy, or Ph.D.s ''affiliated with a hospital or a university.'' *Id.* at 42.

During the interview, Ms. Moore was asked about her experience in handling controlled substances. *Id.* at 49. According to the GS, Ms. Moore ''at first . . . said she had quite a bit of experience, but upon further questioning, it turned out [that] controlled substances were in the facility, but she did not actually handle the drugs herself.'' *Id.* Ms. Moore further stated that she did have research experience, which primarily involved ''handling the paperwork.'' *Id.* at 50.

During the interview, Ms. Moore stated that Dr. Nichol would be responsible for ordering and receiving the controlled substances at

[5] The CTA also provided ''that if [the] Site has not enrolled at least one (1) subject by the Key Enrollment Date,'' RX 14, at 3, which was ''100 Calendar Days after [the] Site Initiation Visit,'' *id.* at 1, then Quintiles could terminate the agreement. *Id.* at 3.

Respondent, as well as keeping the controlled substance records for it. *Id.* at 50–51. Ms. Moore also stated that Dr. Nichol ''would be present at [Respondent] three to four days a week.'' *Id.* Dr. Nichol was registered at 5106 McClanahan Drive, Suite B, North Little Rock, Arkansas. Tr. 487 (testimony of Ms. Moore); RX 22.

According to Ms. Moore, during the meeting, the DIs told her that her application was being denied because she did not met the ''criteria'' found in the U.S. Code. *Id.* at 457, 460. Ms. Moore testified that when she asked what criteria she did not meet, a DI said that Fisher (the drug supplier) ''only contracted with doctors.'' *Id.* at 458. Ms. Moore testified that she had previously sent a copy of the contract she had with Quintiles [6] to the DI and clarified that ''I did not have a contract with Fisher.'' *Id.* Upon reviewing the provisions of the U.S. Code, the GS told Respondent that she did not have a state license and lacked experience in dispensing controlled substances. *Id.* at 462. The DIs eventually asked Ms. Moore to withdraw her application; when Ms. Moore declined to do so, the DIs told her that they would file an order to show cause. *Id.* at 464.

In a subsequent phone conversation, Dr. Nichol confirmed to a DI that he would be ordering the drugs and acting as Respondent's medical director. *Id.* at 56. Dr. Nichol also stated that ''[a]fter the initial work-up of a new patient coming to the clinic for the trial . . . he would be at the clinic once a month for about 30 minutes or so to dispense the medications.'' *Id.* at 56–57. However, according to the GS, Dr. Nichol also stated that he was not ''going to do research at his own facility, because he didn't have the staff.'' *Id.* at 57.

On some date which is not clear on the record, Ms. Moore started recruiting patients by advertising the study on television. *Id.* at 473–74. Following screening, which included a physical exam by Dr. Nichol, various patients who met the criteria for participation were placed in the study.[7] *Id.* at 475–77. In total, eleven patients were selected for the studies, with five being placed in the Kodiac 8 study (two of whom dropped out) and six being placed in the Kodiac 5 study. *Id.* at 477, 481.

Ms. Moore testified that she was aware that Dr. Nichol had a DEA registration and it was her understanding that he could ''participate in our study'' and ''dispense'' the drugs. *Id.* at 484–85. Ms. Moore testified, however, that Dr. Nichol was registered at 5106 McClanahan, Tr. 487, and not at Respondent's office. Ms. Moore further maintained that the drugs were to go to Dr. Nichol's site and that ''he would be required to dispense the drug to the patients'' and the drugs were not to be stored at Respondent. *Id.* at 485. Ms. Moore denied that she dispensed any of the drugs. *Id.* at 486. However, when asked where Dr. Nichol dispensed the drugs, Ms. Moore testified that he ''dispensed the drug in his site or MCT.'' *Id.*[8] Ms. Moore admitted that she never asked the DEA Investigators whether Dr. Nichol could lawfully transport the controlled substances to Respondent and dispense them there. *Id.* at 538.

Ms. Moore testified that in ''early 2012 [9],'' she learned that Dr. Nichol's relationship with DEA had changed and he ''was no longer allowed to dispense from'' Respondent. *Id.* at 497–98. Ms. Moore subsequently explained that this occurred around the time that Nichol entered into a Memorandum of Agreement (MOA) with DEA. *Id.* at 615–16. Ms. Moore maintained that following this, ''[a]ll the patients were . . . dispensed from Dr. Nichol's office.'' *Id.* at 498. However, patients would still come to Respondent for lab draws and EKGs, as there were ''different procedures that would need to be done where the equipment was.'' *Id.* at 499.

In November or December 2011, one or more of the DIs ''saw a television commercial'' which sought patients to participate in the NKTR–118 study. *Id.* at 58. In either February or March 2012, a DI contacted the Arkansas Department of Health and asked an official if Respondent had received a state license. *Id.* The official stated that ''Dr. Nichol had given them a letter, and . . . stated that he would be transporting this NKTR drug to [Respondent] for the research project.'' *Id.* at 58–59.

Months later, in July 2012, the GS contacted John Wegner, a Quintiles official and asked if Quintiles had approved Respondent for participation in the NKTR–118 study. *Id.* at 61. The GS testified that the reason why she had contacted Mr. Wegner was ''because we saw the commercials on TV that [Respondent] was doing research.'' *Id.* It is unclear, however, whether the impetus for this contact were the commercials that the DIs had seen in late 2011 or more recent ones.

In any event, Mr. Wegner told the GS that Dr. Nichol was ordering the controlled substances, which were being shipped to Nichol's registered location, and that Dr. Nichol was transporting them to Respondent, where they were being dispensed. *Id.* at 61–62; *see also* GX 16, at 2. The GS told Mr. Wegner that this ''was illegal because [Respondent] was not a DEA-registered location.'' Tr. 62. The DI then contacted Mr. Jim Phillips, Dr. Nichol's attorney, and asked him if Nichol was involved in the research study and transporting controlled substances to Respondent. *Id.* at 63. Mr. Phillips acknowledged that Nichol was involved in the study and that he was transporting the controlled substances to Respondent and dispensing them. *Id.* Moreover, Mr. Phillips stated that this had been ongoing ''[a]t least since April of 2012.'' *Id.* at 64. However, Mr. Phillips did not know if Dr. Nichol had been doing this even earlier. *Id.*

The DI also requested of Mr. Phillips that Dr. Nichol provide his records, including the dispensing records and the schedule II order forms (DEA Form 222). *Id.* Two weeks later, Mr. Phillips contacted the DI and explained that because the NKTR–118 study was double blinded, neither the patient nor Dr. Nichol knew which patient received the schedule II drug or the placebo. *See* GX 16, at 1–2. In the letter, Mr. Phillips further wrote that ''Dr. Nichol will administer the drugs only at his DEA approved address'' and that ''[w]e will notify the DEA in advance of any upcoming trials involving controlled substances.'' *Id.* at 2. Mr. Phillips then acknowledged that ''[a]ll of this has been previously agreed upon and is clearly stated in the'' MOA.[10] *Id.*

[6] As found above, Ms. Moore had previously sent a copy of her contract to the DI. RX 15.

[7] The criteria included that the patients could not be using any prohibited medications, must be taking a specified amount of opiates (which were prescribed by their regular doctor), and could not ''have any GI conditions.'' Tr. 476–77.

[8] When asked why, at the beginning of the study, Dr. Nichol would dispense at his office rather than at Respondent's location, Ms. Moore offered the incoherent response that: ''He's a busy doctor, and where it was an inconvenience to the patients to go there, we would send the patients there, because he may not be able to . . . meet them, so we would send them there, and he would dispense there.'' Tr. 488.

[9] Subsequently, Ms. Moore testified that she learned about the MOA in ''[m]id-2012. I say in the middle range of the year.'' Tr. 631.

[10] The MOA between DEA and Dr. Nichol was submitted into evidence by Respondent. *See* RX 22. The Agreement recounts that ''[o]n September 27, 2011, DEA issued an Order to Show Cause'' to Dr. Nichol, which proposed the revocation of his registration based on three allegations. *Id.* at 1. First, that the Arkansas State Medical Board had found that Dr. Nichol ''pre-signed controlled substance prescriptions, which were then issued to patients by [his] staff '' when he was ''not present and [was] not consulted by [his] staff when [the] prescriptions were issued.'' *Id.* Second, that in May 2008, he was convicted of health care fraud, in violation of 18 U.S.C. 1347, and was subsequently excluded from participating in Medicare and Medicaid by the Department of Health and Human Services pursuant to 42 U.S.C. 1320a–7(a). *Id.*

In late July 2012, the GS was notified that Respondent was moving its office. Tr. 69. On August 24, 2012, the GS and another DI went to Respondent's new office to conduct an inspection, and met with Ms. Moore and her attorney, Ashley Hudson. *Id.* at 70–71. According to the GS, Ms. Moore ''explained her recordkeeping system to us, how she got the drugs, how she made the records. She showed us how they logged dispensations to the patients. She also had copies of the DEA 222 order form in her notebook.'' *Id.* at 71–72. Ms. Moore explained, however, that the records onsite were copies and that ''all the originals were kept at Dr. Nichol's registered location.'' *Id.* at 72–73.

The GS testified that upon seeing the records, she asked Ms. Moore where the NKTR–118 was being dispensed, and that Ms. Moore stated that ''the drugs were dispensed at Moore Clinical Trials.'' *Id.* at 72; *see also id.* at 711 (testimony of second DI that during August 24 inspection, Ms. Moore ''stated that NKTR was dispensed from the new location . . . in Sherwood, Arkansas,'' and that Ms. Moore never stated that Nichol had dispensed the NKTR at his office). The GS further testified that Ms. Moore also ''stated that Dr. Nichol had transported [the] drugs to that location [Respondent's previous office] as well.'' *Id.* at 72.

After Ms. Moore told the GS that Nichol had been transporting the drugs to Respondent and dispensing them, the GS told Ms. Moore that this was illegal because Respondent's location was not registered. *Id.* at 74. According to the DI, Respondent ''made no comment'' in response. *Id.* Nor, according to the GS, did Ms. Moore ever assert that any of the dispensings had occurred at Dr. Nichol's office.[11] *Id.*

On cross-examination, the Government asked Ms. Moore if she had informed the DIs that she understood ''that Dr. Nichol was no longer allowed to dispense NKTR from MCT.'' Tr. 534. Respondent answered:

> I didn't understand that the investigators were coming to my site to talk about Dr. Nichol. I thought they were coming to my site to look at my site to get further information about my 225 application. I didn't inform them anything about Dr. Nichol until the very end, when I was asked that very question.

Id. at 534–35.

The Government then asked Ms. Moore: ''[s]o you're asked, where is Dr. Nichol dispensing the NKTR, and your answer to them was at MCT. Is that correct?'' *Id.* at 535. Ms. Moore replied:

> That is not correct. I was not asked that. Actually, there was a statement made to me by [the] GS . . . that said, you know Dr. Nichol is not supposed to dispense from MCT. And I said, Uh-huh-yes.

Id. However, Ms. Moore did admit that ''for part of the time,'' Respondent's arrangement was that Dr. Nichol ''was to receive the controlled substances in his office'' and subsequently take them to Respondent to dispense the drug to the research subjects. *Id.* at 538.

The GS also testified that the records did not indicate the name or initials of the person who had dispensed the drugs. *Id.* at 73. The GS then asked Ms. Moore who had dispensed the drugs; Ms. Moore said that Dr. Nichol had. *Id.* at 73–74. Moreover, the GS testified that upon reviewing the DEA Form 222s, the forms did not indicate the date the drugs were received and the quantity received. *Id.* at 78.

On September 4, 2012, the GS received the dispensing records she had previously requested from Mr. Phillips, Dr. Nichol's attorney. *Id.* at 75–76; *see also* GX 14. While the GS testified that the records show that the controlled substances were dispensed at Dr. Nichol's registered address, *id.* at 76, only the first page of the forms, which is not a dispensing record at all but rather a list of persons designated by Dr. Nichol ''to access controlled substances at the above location address,'' listed Dr. Nichol's address. *See* GX 14, at 1. With the exception of a single shipping document entitled ''Blinded Shipment Request,'' which appears to have been created by Astra Zeneca, *see* GX 14, at 13, all of the forms are designated as an ''MCTLLC Form'' with a number,[12] and stated that they were ''[c]reated by: Moore Clinical Trials LLC'' on August 27, 2012. *See generally* GX 14.

As for the shipping document, while it lists eighteen kits of ''[r]andomised (blinded) drug'' and Dr. Nichol's registered location as the Shipping Address, it also listed Respondent's phone number as the ''shipping phone.'' *Id.* at 13; Tr. 84–85. The GS testified that Ms. Moore had signed for the drugs. Tr. 85.

Regarding the records created by Respondent, the GS further testified that they did not differentiate between the two strengths of the drug. Tr. 88. And regarding Respondent's Form 1, an inventory record for the Kodiac 5 arm, *see* GX 14, at 22; the GS testified that the figure for the quantity on hand in the final entry of August 28, 2012 was erroneous. *Id.* at 90. The GS testified that the correct figure should have been 3500 dosage units and not either the number 1120, which was lined out, or the number 1373. *Id.* According to the GS, when the numbers were added up—more specifically the 32 bottles (each containing 35 dosage units) that were listed on the form as ''number of kits/bottles received'') to the previous quantity on hand figure of 2380—the total was 3500. *Id.; see also* Tr. 134.

On cross-examination, the GS was asked to explain how she came up with this figure. The GS maintained that she did so by ''following the methodology that Ms. Moore used, that 32 bottles at 35 tablets apiece is 1,120 tablets,'' and that she added these tablets to the previous quantity on hand ''[b]ecause all the other entries were added in.'' *Id.* at 131–32. When then asked what was listed in the August 28, 2012 entry for the Shipment ID Number, the GS acknowledged that the entry stated: ''Kits Remaining Unused'' and that no shipment was listed. *Id.* at 132. When

Third, that he ''contracted with a researcher to administer a controlled substance [NKRT–118] to research subjects,'' but that ''[t]he owner/operator of this research clinic has no experience handling controlled substances, and that [he] and the owner/operator gave conflicting information about the operation of this research clinic.'' *Id.* at 1–2.

Notwithstanding these allegations, the Agency allowed Dr. Nichol to retain his registration subject to various terms and conditions. Of relevance here, Dr. Nichol agreed that he ''will not administer or dispense . . . controlled substances except in the course of his own medical practice as an individual practitioner and will administer or dispense . . . controlled substances only from his DEA registered location. As the physician who is contracted to administer the FDA approved study drug NKTR–118, Dr. Nichol will administer that drug at either his DEA registered location or at an approved site for the current drug study.'' *Id.* at 3. The Special Agent in Charge approved the MOA on April 17, 2012, and Dr. Nichol signed the agreement on April 20, 2012. *Id.* at 4.

[11] At the hearing, Ms. Moore denied that it was her understanding that Respondent could not dispense controlled substance until it got its DEA registration; she also testified that she did not think that it was illegal for Dr. Nichol to bring the controlled substances to Respondent and dispense them there. Tr. 537–39. Still later, Ms. Moore testified that she ''didn't understand that [Respondent] was dispensing or ordering'' and asserted that ''[w]e weren't dispensing or ordering any controlled substances.'' *Id.* at 597.

[12] More specifically, MCTLLC Form 5 lists the persons who Dr. Nichol authorized to access the controlled substances, *see* GX 14, at 1; MCTLLC Form 4 lists the DEA Order Forms (222s) which were submitted to Fisher Clinical Services, along with the amounts ordered and received, as well as the dates of the orders and receipts, *see id.* at 2; MCTLLC Form 2 lists the drug, the quantity, the date received, the distributor, and the invoice number, *id.* at 4; MCTLLC Form 3 is a perpetual inventory which lists quantities on hand, the amounts received in incoming shipments, the amounts dispensed along with the study subjects' initials and subject number, and the amounts returned by them, *id.* at 5; and MCTLLC Form 1 lists the inventory, including incoming shipments but not the drugs dispensed. *Id.* at 8. The latter also includes a final entry, dated August 27, 2012, the same date the document was created, that lists the number of bottles unused and the number of tablets that were returned by the study subjects. *See id.* at 9.

asked if she counted the 32 bottles as a new shipment, the GS testified that: ''I counted it because it was the same methodology. Now, if it had been just the number of tablets remaining, it would have been the 1,120, which is crossed out.'' *Id.* at 133. The GS then denied that the math would have worked out if she had just calculated the 32 bottles as ''kits remaining unused'' and asserted that ''[t]he math works with the 1,373 number.'' *Id.*

Throughout her testimony, the GS insisted that in coming up with the 3500 figure, she was following Ms. Moore's methodology.[13] *See id.* at 134–35. However, the GS acknowledged that she did not contact either Ms. Moore or Dr. Nichol and ask them what ''kits remaining unused meant.'' *Id.* Ms. Moore later explained that this term meant ''kits that were never dispensed'' and that this entry did not reflect a new shipment. *Id.* at 622.

The GS testified that using the records provided by Dr. Nichol's attorney, she created a computation chart in which she added the quantities of drugs received in each arm of the study to the initial inventory (which was zero), to determine the total amount that Dr. Nichol was accountable for; she then took what she called the closing inventory and added to it the quantities which were distributed to calculate the total amount Nichol could account for, and compared the two. Tr. 95–100; GX 15. However, the closing inventory was not based on an actual physical count performed by the DIs but on the records provided by Dr. Nichol. Tr. 99, 623.

The GS further testified that she made two sets of calculations, one based on the closing inventory figures Ms. Moore listed on the documents, and the other based on what the GS called ''the correct math.'' *Id.* at 105. Subsequently, the GS testified that this was not ''a normal DEA audit'' and that these ''are Dr. Nichol's records'' and ''not Ms. Moore's records.'' *Id.* at 142. Moreover, the GS testified that she did not contact Dr. Nichol about the records. *Id.* at 143.

Regarding the records which were provided by Dr. Nichol's counsel, Ms. Moore acknowledged that she had created them, and that they had been created between August 24 and 27, 2012. Tr. 544–45. The Government also asked about a computation chart (GX 18), which Ms. Moore had created, with Ms. Moore testifying that the chart was based on Dr. Nichol's records for the Kodiac 5 and 8 studies. *Id.* at 546–48. Ms. Moore denied, however, that the chart should differentiate between the 12.5mg and 25mg strength dosage units, contending that because the studies were blinded, she would not know which kits contained what strength tablet; she also testified that the information could not be discerned from the sponsor's records. *Id.* at 549.

Ms. Moore then testified:

> I'm sorry . . . but I don't know anything about the true nature of creating these records. My intent in creating these records was simply to have [the GS] affirm to me that I was on the right track, so this record is not a response to any of these other beings. I'm simply trying to create records, because my understanding after the visit with [the GS] was the DEA's main concern is compliance.
>
> So my main concern after what I thought was my . . . on-site visit at the second point was to attempt to be compliant with the DEA, so I'm simply creating forms, not for the DEA. I didn't realize that the DEA was going to get these forms. The reason that the forms are not correct is because it was eleven o'clock at night when I did the forms. My intention was to have an opportunity to think on, [w]hy are my forms not balancing. But before I could do that, which would have been the next day, when I went to Dr. Nichol's office, the forms had been submitted to the DEA.

Id. at 550–51; *see also id.* at 563 (further testimony from Ms. Moore to same effect).[14] And on further questioning, Ms. Moore again re-iterated that the bottles did not indicate whether they were 12.5 or 25 mg tablets. *Id.* at 553.

Regarding the computation chart Ms. Moore created (GX 18), the Government attempted to show that the ''total accountable for'' figures did not add up to the ''total accounted for.'' More specifically, the Government noted that on the ''total accounted for'' side of the chart, Ms. Moore had four columns: (1) the closing inventory, which included the sum of the drugs returned and not dispensed (192); (2) the number distributed/transferred (438); (3) the number of tablets returned unused (87); and (4) the number of tablets not dispensed (105). Tr. 557; GX 18. According to Ms. Moore's chart, for the Kodiac 8 study, Dr. Nichol was ''accountable for'' 630 tablets and ''accounted for'' 630 tablets. GX 18.

The Government then asked Ms. Moore how she arrived at the 630 figure, given the figures in the four columns totaled 822 and not 630. Tr. 557–60. Ms. Moore testified that ''what I attempted to do was to show the number of tablets that were received per these shipping documents. That's 630, the number of tablets that were dispensed, the number of tablets that were returned, the number of tablets that never left the site, and the closing inventory.'' *Id.* at 560. Ms. Moore then explained that ''[w]here the DEA's example of this sheet may balance the way you're saying, that's not the balance, because the balance can only be the number of tablets that were actually received per the shipping documents.'' *Id.*

When the Government then asked if the ''total accountable for'' and the ''total accounted for'' should be the same, Ms. Moore replied:

> If I'm looking at this record, if I add 438, 87—perhaps I should have done some lines more similar to this form, where you could see double lines, but because I really didn't have any real direction on how to do it, I'm simply making an example. This is not for the DEA. This was simply just to try to be compliant, which is what I was told.

Id. at 560–61; *see also id.* at 570 (''This is not a record for the DEA. This is simply just to try to be compliant, to try to do what [the GS] told me in my meeting that I did not realize was an audit.''). Ms. Moore added that she was ''simply learning how to do the form, trying to do the form properly, but you can't use this form as a proper documentation of anything. This form balances to my sponsor form, which is what is important to me, that my sponsor's count is correct.'' *Id.* at 561.[15] However, on redirect, Ms. Moore clarified that ''the number of tablets returned unused, plus the number of tablets not dispensed'' equals the closing inventory. *Id.* at 625. She also testified that the ''number of tablets returned unused'' was documented ''[i]n

[13] Likewise, in determining the closing inventory for the drugs that were received and dispensed in the Kodiac 8 study, the GS determined that ''the correct math'' was 822 dosage units and not 192 dosage units as recorded on the form. *See* GX 14, at 9; Tr. 105–07. However, the form was not a perpetual inventory, but rather, a record of inventories taken periodically as well as when shipments were received. *See* GX 14, at 8–9. Here again, the last entry (which is dated August 27, 2012) does not list a ''Shipment ID Number.'' *Id.* at 9. Rather, it states ''unused/returned'' in this column and indicates that 105 (3 kits) were unused and 87 tablets were returned, for a total quantity on hand of 192. *See id.* The GS, however, simply added up the figures for each shipment, as well as the figures that were listed for August 27, and concluded that Dr. Nichol should have had on hand 822 dosage units. *See id;* GX 15; Tr. 106–07.

[14] *See also* Tr. 564 (''So these records are simply trying to be compliant with what I was told in my on-site visit, that we needed to create records for being compliant. I used these numbers, because this was what I had at hand, but I didn't use these for the DEA. I used these to say, [i]f I were a DEA registrant and I was going to do forms, then I have information I'm trying to put in here to show, hey, I know how to do it; I'm trying to do it right. But it may or may not balance, because it can be used like that. I'm trying to figure out how to do the forms.'').

[15] Ms. Moore further testified that the GS had told her she ''could email a form that I put together, and she would give me a response on whether it was the information that was needed for the DEA.'' Tr. 620. Ms. Moore asserted that she did send the GS a form to review but received no response. *Id.* at 621; *see also* RX 25.

our sponsor's records[16],'' and that ''every time the patient would return drug, you're required to do accountability, because in the study, there's a certain accountability that the patient has to maintain to stay in the study.'' *Id.* at 636–37. Finally, Ms. Moore testified that the numbers on the forms she created ''match my sponsor's records'' and that ''[t]he sponsor has signed off on the records.'' *Id.* at 638.

Regarding the forms she created (GX 14), Ms. Moore testified that she used the sponsor's records to create them. *Id.* at 562. Ms. Moore further explained that:

> [t]hose are the records that are important to the sponsor and important to the study. Nowhere in keeping records was there ever any indication, until [the GS] came to my site, that we were to keep two sets of books. I never heard that, but I'm not a registrant, so maybe if I were, I would have heard it and known that. But this was simply in response to the on-site visit in my office on 24th of August 2012.

Id. at 564–65. Still later, Ms. Moore reiterated that she was not aware that Dr. Nichol was required to keep controlled substance records for the NKTR studies (for DEA) until the August 24, 2012 visit. Tr. 822–23.

Addressing the GS's computation chart (GX 15), Ms. Moore maintained that the Kodiac 8 study had received only 630 dosage units and not 717 as asserted by the GS. Tr. 574. She also disputed the GS's conclusion that using the ''correct math'' for the Kodiac 8 study resulted in an overage of 630 dosage units. *Id.* at 575. And when asked about the closing inventory figure for the Kodiac 5 study (GX 14, at 22), Ms. Moore maintained that neither the GS's 3500 figure, nor the 1120 figure (which was crossed out), were correct. Tr. 576. Instead, she explained that 1373 (as is written on the form) was correct, because it included both the bottles that were not dispensed (32, each with 35 tablets) and the tablets that the patients returned.[17] *Id.*

The Government also asked Ms. Moore if she knew ''that it is a required dispensing record to put down the location where the controlled substances were dispensed from?'' Tr. 583. Ms. Moore testified that she does not

> know what is required, but as a compliant person, I'm more than happy to learn what is required as a DEA registrant, because I am prepared to do whatever needs to be done, as I do my clinical research, because there are requirements that are required there as well. So after I learn what is required . . . I'm fully prepared to be compliant.

Id. at 584. Ms. Moore also testified that in her discussion with the GS regarding the records, the GS ''did not'' tell her that she needed to have a column to indicate where the drugs were dispensed.[18] *Id.* at 620.

On cross-examination, the Government also asked Ms. Moore whether, prior to entering into the contract with Dr. Nichol in 2010, she was aware of his history with the Arkansas Medical Board, which had suspended him for pre-signing controlled substances prescriptions. *Id.* at 590. Ms. Moore answered that she was not aware of his history, but was aware that he had a current medical license. *Id.* Ms. Moore then added that she found out ''some things'' later, but could not say when she did. *Id.*

The Government then asked Ms. Moore whether, prior to entering into the contract with Dr. Nichol in 2010, she was aware that he had been convicted of felony health care fraud in federal district court. *Id.* Apparently referring to an un-admitted exhibit, Ms. Moore testified that she had ''never seen this before'' but that she ''would like to have . . . documentation to just confirm . . . what you're saying is true.'' *Id.* at 590–91. Ms. Moore then testified that she did not know this information, and that she ''can't just confirm it, based on what you're showing me here.'' *Id.* at 591. When the Government followed-up by asking whether, regardless of the documentation (that was not admitted), she knew, prior to entering into the contract, that Dr. Nichol had been suspended by the state board and been convicted of health care fraud, Ms. Moore testified that she did not ''know the answer to that'' but did ''know that in our relationship, I knew it.'' *Id.* at 592. Ms. Moore then explained that when she ''met Dr. Nichol, he had a valid license, and he was not under any restrictions on the license that I obtained, and so in my estimation of our business relationship, he was okay to do research.'' *Id.*

Discussion

Section 303(f) of the Controlled Substances Act (CSA) provides that ''[t]he Attorney General shall register practitioners . . . to dispense, or conduct research with, controlled substances in schedules II, III, IV, or V . . . if the applicant is authorized to dispense, or conduct research with respect to, controlled substances under

[16] On rebuttal, Respondent also introduced copies of a Sponsor Record entitled: ''NKTR–118 Accountability Form.'' RX 23. This form includes a column for the date drugs were either received or dispensed, a column for a shipment ID number, a column for a Subject Number, Kit Number, number of tablets dispensed or returned, the recorder's initials, the balance, and comments (the latter indicating whether drugs were dispensed or returned, or a new shipment was received). *See* RXs 23 & 24. While these records were introduced into the record to refute the testimony of the DIs that Dr. Nichol had continued to dispense controlled substances from Respondent's new office, the documents show that a dispensing occurred on August 3, 2012, two days after Ms. Moore said the new office had opened. *See* RX 23, at 12; RX 26, at 2.

[17] Having reviewed Respondent's Form 3 for the Kodiac 5 study, *see* GX 14, at 14–20; I find that 253 tablets were returned by the study subjects. When added to the number of dosages units that were not dispensed (1120), the total is 1373.

[18] Respondent also called as a witness a former DEA Diversion Investigator from the Little Rock office, who asserted that Ms. Moore's application was not handled in the same manner as other researchers' applications, which apparently he routinely approved in a perfunctory fashion such as by not even writing the required reports. Tr. 657–58, 716. In addition to expressing his typically erroneous views on various issues (such as whether NKTR–118 was subject to being removed from the schedule of controlled substances or moved to a less-restrictive schedule, *see id.* at 685–86, 714), the former DI also alleged that one of the subordinate DIs involved in the investigation of Respondent had been the subject of an investigation by the Office of Professional Responsibility into her use of racial slurs made to a roommate at the DEA Academy, and that someone intervened to prevent her termination. Tr. 665. The former DI also provided an affidavit, in which he stated: ''I speculate that when the Investigators learned of Ms. Moore's race, that this may have contributed to an Investigator requesting Ms. Moore's application be denied. The Investigator has a history of racial problems.'' RX 21, at 2. However, when asked what information he had that there was a specific complaint that the DI had engaged in racist conduct, the former DI replied: ''What information do I have? You want details on the allegation?'' Tr. 695. The former DI then further acknowledged that he did not have the names of those involved in the purported incident. *Id.*

The former DI did not identify any incidents on the part of the Investigator beyond the purported incident described above, and on rebuttal, the GS testified that she had checked with the Agency's Office of Professional Responsibility and determined that no complaint had ever been filed against the DI. Tr. 715.

Moreover, the former DI admitted that he had been denied a permanent promotion to Group Supervisor and had resigned after the Agency proposed his removal for failing to meet medical standards. *Id.* at 697, 700. Thereafter, the former DI filed an EEO complaint, a petition before the Merit Systems Protection Board, and two lawsuits against the Agency challenging his removal on various grounds. *Id.* at 696–701. However, the former DI lost every challenge. *See id.* Of further note, the DI, who he had accused of racism, had testified against him in a federal court proceeding in which he unsuccessfully sought to enjoin his removal. *Id.* at 697–98.

As did the ALJ, I reject the former's DI contention that Ms. Moore was treated differently on account of her race. *See* R.D. at 8 n.3. While there is evidence that other researchers' application were approved during the former DI's time in Little Rock without an on-site inspection, as the GS testified, Ms. Moore was neither a medical doctor nor a Ph.D., as is typically the case with researcher applicants, and she also had no experience in conducting research with respect to controlled substances. Beyond the fact that Agency personnel have discretion to conduct an on-site inspection whenever they deem it necessary, the unique circumstances posed by this applicant clearly warranted an on-site inspection.

the laws of the State in which [s]he practices.'' 21 U.S.C. 823(f). However, ''[t]he Attorney General may deny an application for such registration . . . if the Attorney General determines that the issuance of such registration . . . would be inconsistent with the public interest.'' *Id.* In making the public interest determination, the CSA directs that the following factors be considered:

(1) The recommendation of the appropriate State licensing board or professional disciplinary authority.

(2) The applicant's experience in dispensing or conducting research with respect to controlled substances.

(3) The applicant's conviction record under Federal or State laws relating to the manufacture, distribution, or dispensing of controlled substances.

(4) Compliance with applicable State, Federal, or local laws relating to controlled substances.

(5) Such other conduct which may threaten the public health and safety.

Id.

''[T]hese factors are . . . considered in the disjunctive.'' *Robert A. Leslie, M.D.,* 68 FR 15227, 15230 (2003). It is well settled that I ''may rely on any one or a combination of factors, and may give each factor the weight [I] deem[] appropriate in determining whether'' an application for registration should be denied. *Id.; see also MacKay* v. *DEA,* 664 F.3d 808, 816 (10th Cir. 2011); *Volkman* v. *DEA,* 567 F.3d 215, 222 (6th Cir. 2009); *Hoxie* v. *DEA,* 419 F.3d 477, 482 (6th Cir. 2005). Moreover, while I am required to consider each of the factors, I ''need not make explicit findings as to each one.'' *MacKay,* 664 F.3d at 816 (quoting *Volkman,* 567 F.3d at 222); *see also Hoxie,* 419 F.3d at 482.[19]

The Government has ''the burden of proving that the requirements for . . . registration . . . are not satisfied.'' 21 CFR 1301.44(d). However, where the Government has met its *prima facie* burden of showing that issuing a new registration to the applicant would be inconsistent with the public interest, an applicant must then ''present sufficient mitigating evidence'' to show why she can be entrusted with a new registration. *Medicine Shoppe-Jonesborough,* 73 FR 364, 387 (2008) (quoting *Samuel S. Jackson,* 72 FR 23848, 23853 (2007) (quoting *Leo R. Miller,* 53 FR 21931, 21932 (1988))).

In this matter, I have considered all of the factors. I agree with the ALJ's finding that Ms. Moore violated federal law when she signed for and took possession of a shipment of controlled substances and Respondent was not registered. Moreover, I further agree with the ALJ's finding that Dr. Nichol violated federal law when he dispensed controlled substances at Respondent's office without being registered at that location.

However, for reasons explained below, I reject the ALJ's conclusion that Dr. Nichol's misconduct cannot be imputed to Respondent because the Government has not proved that he acted as Respondent's agent. Contrary to the ALJ's understanding, the Government was not required to prove an agency relationship existed in order to impute Dr. Nichol's violations to Respondent and Ms. Moore. Rather, Dr. Nichol's violations can be imputed to Ms. Moore and Respondent because at a minimum, the evidence shows that they aided and abetted his violations of federal law in dispensing controlled substances at Respondent, which was not registered. Moreover, I find that Ms. Moore and Respondent failed to maintain complete and accurate records as required by the CSA. Because Ms. Moore has failed to accept responsibility for both the dispensing and recordkeeping violations, and, as found by the ALJ, lacked candor in her testimony regarding the dispensing violations, I conclude that she has not rebutted the Government's *prima facie* case.

Factor One—The Recommendation of the State Licensing Authority

Pursuant to 21 U.S.C. 823(f), ''[t]he Attorney General shall register practitioners . . . to dispense, or conduct research with, controlled substances in schedule II, III, IV, or V . . . if the applicant is authorized to dispense, or conduct research with respect to, controlled substances under the laws of the State in which he practices.'' *See also* 21 U.S.C. 802(21) (''The term 'practitioner' means a physician, dentist, veterinarian, scientific investigator . . . or other person licensed, registered, or otherwise permitted, by the United States or the jurisdiction in which he practices or does research, to distribute, dispense, conduct research with respect to, administer, or use in teaching or chemical analysis, a controlled substance in the course of professional practice or research.''); *id.* § 824(a)(3) (authorizing the suspension or revocation of a registration ''upon a finding that the registrant . . . has had his State license or registration suspended, revoked, or denied by competent State authority and is no longer authorized by State law to engage in the manufacturing, distribution, or dispensing of controlled substances'').

As explained above, the Government initially sought to deny Respondent's application on the ground that it did not hold authority under state law to engage in research with respect to controlled substances. However, on March 12, 2012, Respondent obtained a temporary Arkansas Controlled Substance Registration, which was due to expire on September 12, 2012. RX 19. Moreover, Respondent's state registration has since been extended until December 31, 2013.

However, while the possession of state authority is an essential condition for obtaining a practitioner's (and researcher's) registration, it '''is not dispositive of the public interest inquiry.''' *George Mathew, M.D.,* 75 FR 66138, 66145 (2010), *pet. for rev. denied, Mathew* v. *DEA,* No. 10–73480, slip op. at 5 (9th Cir., Mar. 16, 2012); *see also Patrick W. Stodola,* 74 FR 20727, 20730 n.16 (2009). As the Agency has long held, ''the Controlled Substances Act requires that the Administrator . . . make an independent determination [from that made by state officials] as to whether the granting of controlled substance privileges would be in the public interest.'' *Mortimer Levin, D.O.,* 57 FR 8680, 8681 (1992). Ultimately, because I conclude that other grounds exist to deny Respondent's application, I hold that this factor is not dispositive and give it nominal weight in the public interest analysis.[20]

Factors Two and Four—The Applicant's Experience in Dispensing, or Conducting Research with Respect to Controlled Substances and The Applicant's Compliance with Applicable Laws Related to Controlled Substances

As found above, it is undisputed that Ms. Moore was previously employed as

[19] In short, this is not a contest in which score is kept; the Agency is not required to mechanically count up the factors and determine how many favor the Government and how many favor the registrant. Rather, it is an inquiry which focuses on protecting the public interest; what matters is the seriousness of the registrant's or applicant's misconduct. *Jayam Krishna-Iyer,* 74 FR 459, 462 (2009). Accordingly, as the Tenth Circuit has recognized, findings under a single factor can support the revocation of a registration. *MacKay,* 664 F.3d at 821. Likewise, findings under a single factor can support the denial of an application.

[20] As for factor three, there is no evidence that Respondent has been convicted of an offense ''relating to the manufacture, distribution or dispensing of controlled substances.'' 21 U.S.C. 823(f)(3). However, there are a number of reasons why even a person who has engaged in misconduct may never have been convicted of an offense under this factor, let alone prosecuted for one. *Dewey C. MacKay,* 75 FR 49956, 49973 (2010), *pet. for rev. denied, MacKay* v. *DEA,* 664 F.3d 808 (10th Cir. 2011). The Agency has therefore held that ''the absence of such a conviction is of considerably less consequence in the public interest inquiry'' and is therefore not dispositive. *Id.*

a Respiratory Therapist and as a Clinical Research Coordinator. As the ALJ found with respect to Ms. Moore's employment as a Respiratory Therapist, Ms. Moore had limited experience handling controlled substances and no experience in keeping controlled substance records. R.D. at 6. As for her more recent employment as a Clinical Research Coordinator, while Ms. Moore was involved in managing a number of clinical trials, none of these involved controlled substances.[21] *Id.* at 7.

Indeed, Ms. Moore's lack of experience in research with respect to controlled substances was manifested throughout her testimony. For example, Ms. Moore denied that she understood that Respondent could not dispense controlled substances until it obtained a DEA registration, Tr. 537–38, and—as if the law isn't clear enough—did so notwithstanding that the Quintiles representative had advised her in writing that her ''site must obtain a DEA license for research with a controlled substance.'' RX 4. Ms. Moore also testified that she did not think it was illegal for Dr. Nichol to bring the controlled substances to Respondent's office and dispense them there. Tr. 538–39. Subsequently, and notwithstanding that at the very first DEA visit, the DIs provided Ms. Moore with a copy of the Code of Federal Regulations and reviewed the recordkeeping requirements found in Part 1304, Ms. Moore testified that she was not aware that Dr. Nichol was required to keep controlled substance records until the August 24, 2012 visit.[22] *Id.* at 822–23.

Later, when asked if the dispensing record was required to include the location of where the controlled substances were dispensed from, Ms. Moore testified that she does not ''know what is required, but as a compliant person, I'm more than happy to learn what is required as a DEA registrant, because I am prepared to do whatever needs to be done. . . . So after I learn what is required . . . I'm fully prepared to be compliant.'' *Id.* at 584. Thus, while there is some evidence to support Ms. Moore's contention that she is prepared to be compliant (*e.g.,* her installation of the alarm, provision of information to the DIs, and attempts to create compliant records), it is shocking that even at the time of the hearing, Ms. Moore still lacked knowledge of several of the fundamental requirements imposed by the CSA and Agency regulations.

For example, regarding Dr. Nichol's dispensings at Respondent's office, the CSA provides that ''[a] separate registration shall be required at each principal place of business or professional practice where the applicant . . . dispenses controlled substances.'' 21 U.S.C. 822(e). Interpreting this provision, the Fifth Circuit has held that ''[i]f a physician intends to dispense controlled substances from a particular location several times a week *or month,* he must first file a separate registration for the location. This aspect of the registration provisions is beyond cavil.'' *United States* v. *Clinical Leasing Serv., Inc.,* 930 F.2d 394, 395 (5th Cir. 1991) (emphasis added). *See also id.* § 822(b) (''Persons registered by the Attorney General under this subchapter to . . . dispense controlled substances . . . are authorized to possess . . . or dispensed such substances . . . (including any such activity in the conduct of research) *to the extent authorized by their registration and in conformity with the other provisions of this subchapter.*) (emphasis added); *see also* 21 CFR 1301.12(a); *Jeffery Becker, M.D.,* 77 FR72387, 72387–88 (2012).

As for Ms. Moore's testimony that she was not aware that Dr. Nichol was required to keep controlled substance records until August 24, 2012, the CSA provides that ''every registrant . . . shall . . . as soon . . . as such registrant first engages in the . . . dispensing of controlled substances . . . make a complete and accurate record of all stocks thereof on hand.'' 21 U.S.C. 827(a)(1). So too, the CSA requires that ''every registrant . . . dispensing a controlled substance . . . shall maintain, *on a current basis,* a complete and accurate record of each such substance . . . received, sold, delivered, or otherwise disposed of by him, except that this paragraph shall not require the maintenance of a perpetual inventory.'' *Id.* at § 827(a)(3)(emphasis added).

As the Agency has previously explained, ''the CSA creates 'a closed regulatory system making it unlawful to manufacture, distribute, dispense, or possess any controlled substance except in a manner authorized by the [Act].' '' *Daniel Koller, D.V.M.,* 71 FR 66975, 66981 (2006) (quoting *Gonzales* v. *Raich,* 545 U.S. 1, 13 (2005) (citing 21 U.S.C. 841(a)(1), 844(a))). Of particular relevance here, the Supreme Court has noted that '' '[t]he CSA and its implementing regulations set forth strict requirements regarding registration . . . and recordkeeping.' '' *Koller,* 71 FR at 66981 (quoting *Raich,* 545 U.S. at 14). *See also Paul H. Volkman,* 73 FR 30630, 30644 (2008) (''Recordkeeping is one of the CSA's central features; a registrant's accurate and diligent adherence to this obligation is absolutely essential to protect against the diversion of controlled substances.''). In short, the requirements that a practitioner be registered at each principal place of professional practice where he dispenses controlled substances and maintain complete and accurate records of the controlled substances he handles are not arcane rules; rather, they are two of the fundamental features of the closed regulatory system created by the CSA. Yet Ms. Ms. Moore claimed to be unaware of these rules. Ms. Moore's lack of experience in conducting research with respect to controlled substances, when coupled with her lack of knowledge of these essential requirements, provides ample reason to conclude that her registration ''would be inconsistent with the public interest.'' 21 U.S.C. 823(f).[23]

Moreover, the record clearly establishes that Dr. Nichol violated both the separate registration provision and DEA recordkeeping requirements. As for Dr. Nichol's violations of the separate registration provision, it is true that Ms. Moore disputed the testimony of the GS and another DI that during the August 24, 2012 on-site inspection, she was asked where Dr. Nichol was dispensing the drugs and said they had been dispensed at Respondent's offices, and that Ms. Moore never claimed that Nichol had dispensed the controlled substances at his office. Tr. 72, 710–11. Of note, Ms. Moore specifically denied that she was even asked if Dr. Nichol was dispensing the drugs at Respondent. Tr. 535; *see also id.* at 726–27.

[21] I place no weight on the fact that Ms. Moore was fired by her previous employer or that she failed to produce letters of recommendation. *See* Gov. Br. at 24. The Government produced no evidence regarding the circumstances surrounding her termination. Nor has it cited any authority that DEA requires an applicant for a research registration to produce letters of recommendation.

[22] The Government also argues that ''Dr. Nichol's past experience with controlled substances does not qualify him . . . to handle controlled substances.'' Gov. Br. 24. As support for this assertion, the Government cites Dr. Nichol's state board suspension and his exclusion from participation in federal health care programs. *Id.* The Government does not explain why it nonetheless entered into an MOA with Dr. Nichol, pursuant to which it allowed him to keep his registration and did so even after it became aware that he was transporting controlled substances to Respondent's office and dispensing them. I thus reject its contention.

[23] In assessing Respondent's experience in conducting research with respect to controlled substances, the ALJ found ''the fact that Astra Zeneca [actually, Quintiles] granted her a research project indicative of her documented experience at least to their satisfaction for purposes of this study.'' R.D. at 27. As explained above, the determination of whether granting a researcher's registration is consistent with the public interest is vested in the Agency (by delegation from the Attorney General) and not in pharmaceutical companies or CROs. Accordingly, I reject the ALJ's rumination as totally irrelevant.

While the ALJ's opinion contained inconsistent findings on the issue of whether Nichol was still dispensing the drugs at Respondent after he entered the MOA,[24] the ALJ did find that Ms. Moore ''vacillated in her testimony concerning where the controlled substance was actually dispensed,'' and most significantly, that she lacked candor. R.D. at 34. In any event, even accepting Ms. Moore's testimony that Dr. Nichol stopped dispensing at Respondent's offices following his entering into the MOA, I would still conclude that Nichol violated the separate registration provision by dispensing controlled substances at Respondent.[25] In short, the evidence shows that Dr. Nichol made the dispensings on a regular and non-random basis, even if he did so only a few times a month. *See Jeffery J. Becker, D.D.S.,* 77 FR 72387, 72388 (2012). Indeed, for purposes of Dr. Nichol's activities as a researcher, Respondent's office was in every sense an '' 'important or consequential' '' place of professional practice. *Clinical Leasing Serv.,* 930 F.2d at 395; *see also id.* (''If a physician intends to dispense controlled substances from a particular location several times a week or month, he must first file a separate registration for the location.'').

Moreover, while Ms. Moore maintained that if she is granted a registration, the physicians Respondent contracts with will be responsible for the dispensing and recordkeeping of the controlled substances, as the ALJ recognized, under federal law, if controlled substances were dispensed at Respondent's office, it was responsible for maintaining complete and accurate records. *United States* v. *Clinical Leasing Serv., Inc.,* 759 F. Supp. 310, 313 (E.D. La. 1990), *aff'd* 925 F.2d 120, 123 (5th Cir. 1991). As the court explained:

> The clinic is charged with failure to maintain proper records. The law clearly requires every ''person'' (including a corporation) to maintain proper records if that person dispenses controlled substances. By employing physicians to dispense drugs in connection with its operation, the clinic is a dispenser of controlled substances. Therefore, *the clinic, as well as the physicians it employs, must maintain the proper records required by law.*

759 F. Supp. at 312 (emphasis added).

The court expressly rejected the clinic's contention that ''it was not required to maintain records,'' because ''the record keeping requirements pertain only to 'registrants,' '' noting that 21 U.S.C. 842(a)(5) ''does not require that one who refuses or fails to make, keep, or furnish records be a 'registrant,' '' but applies to ''any person,'' including '' 'an individual, corporation . . . business trust, partnership, association, or other legal entity.' '' *Id.* at 313 (quoting 21 CFR 1301.02(j)). Multiple federal courts have likewise rejected the contention that the CSA's recordkeeping requirements do not apply to non-registrant owners of clinics which dispense controlled substances. *See United States* v. *Robinson,* 2012 WL 3984786, *6–7 (S.D. Fla., Sept. 11, 2012) (holding non-registrant owner of cosmetic surgery clinic liable for recordkeeping violations under section 842(a)(5); statute ''includes the broader term of 'any person' and does not limit application of the subsection to registrants''); *United States* v. *Stidham,* 938 F.Supp. 808, 813–15 (S.D. Ala. 1996) (holding non-registrant owner of methadone clinic liable for recordkeeping violations); *United States* v. *Poulin,* 926 F.Supp. 246, 250–51 (D. Mass. 1996) (''The recordkeeping provisions of the [CSA] apply to all persons who dispense drugs, even if they have not registered as required under the Act'' and holding both pharmacy's owner/proprietor and corporate entity liable for recordkeeping violations); *see also* 21 U.S.C. 842(a)(5).

Of note, the GS testified that during the August 24, 2012 inspection of Respondent's new office, she examined the Schedule II order forms and noted that they had not been completed by indicating the date the drugs were received and the quantity received. Tr. 78; *see also* 21 CFR 1305.13(e). The evidence also shows that in response to the GS's request (through Dr. Nichol's attorney) for Dr. Nichol's dispensing records, Nichol provided the GS with the records found in Government Exhibit 14. Tr. 75.

Notably, it is undisputed that the dispensing record for each study—which Dr. Nichol provided—was not created until August 27, 2012, well after all of the dispensings were made. *See* GX 14, at 5–7 (Kodiac 8); *id.* at 14–20 (Kodiac 5). The CSA requires, however, that a dispensing record be ''maintain[ed], on a current basis.'' 21 U.S.C. 827(a)(3). Thus, the records presented to the GS by Dr. Nichol clearly did not comply with federal law.

As for whether Ms. Moore was maintaining the records which complied with the CSA, the ALJ's decision again contains several inconsistent findings and conclusions. For example, the ALJ found that ''it is unknown whether Ms. Moore's sponsor-required records would satisfy the DEA's recordkeeping requirements, since neither party made them exhibits in this matter.'' R.D. 20; *see also id.* at 32 (''Evidence of Ms. Moore's Sponsor Records was not entered into this record.''). However, Ms. Moore testified that the NKTR–118 Accountability Forms, which were introduced into the record at RXs 23 and 24, were ''my sponsor's record[s].'' Tr. 811; *see also id.* at 813–23 (discussing notations in records made by the sponsor's representative or CRA).

The ALJ nonetheless concluded that because ''[e]vidence of Ms. Moore's Sponsor records was not entered into this record . . . the Government has failed to prove by a preponderance of the evidence that the Respondent's records are deficient.'' R.D. at 33. Yet the ALJ then explained that ''[a]lthough *Respondent has failed to maintain its own recordkeeping system,* it cannot be held responsible for all of the noncompliant actions of Dr. Nichol.'' *Id.* (emphasis added). And later, the ALJ explained that Ms. Moore ''clearly lacks experience in handling controlled substances, for *she has not prepared the paperwork required in remaining accountable for the controlled substances* in Dr. Nichol's charge.'' R.D. at 35 (emphasis added).

Moreover, regarding the obligation to keep records under the CSA, Ms. Moore testified that ''I only learned on the 24th of August 2012, when the DEA came into my site for onsite inspection, that there was a requirement to have separate books. So I wasn't keeping records for the DEA.'' Tr. 811. As for the sponsor record, Ms. Moore testified that she ''was simply recording everything

[24] More specifically, the ALJ found that the GS had spoken with the John Wegner, a Quintiles representative and ''confirmed that the controlled substance was being dispensed from MCT. The drug was being ordered by Dr. Nichol, sent to his office location, and transported to MCT for dispensing. This procedure was ongoing from *at least* April of 2012.'' R.D. at 10 (citing Tr. 61–64) (emphasis added and citations omitted). As found above, the record indicates that while the GS spoke with Mr. Wegner in July 2012 and was told that Dr. Nichol was taking the drugs to Respondent, where they were dispensed, she then contacted Dr. Nichol's attorney, who confirmed that his client had been doing this ''[a]t least since April of 2012.'' *Id.* at 64.

Yet later in the R.D., the ALJ found that ''[a]t some unspecified time in 2012, Ms. Moore became aware that Dr. Nichol's relationship with the DEA had changed. She understood that Dr. Nichol could no longer dispense controlled substances from the Respondent's location. Thereafter, patients were dispensed controlled substances from Dr. Nichol's office.'' R.D. at 16 (citing Tr. 497–98; 531–35, 631). However, the evidence shows that Nichol did not enter into the MOA until the middle of April 2012. RX 22, at 4.

[25] Given the ALJ's finding that Ms. Moore vacillated in her testimony and lacked candor on the issue of where the dispensings occurred, as ultimate factfinder I give no weight to her testimony that even before Nichol entered into the MOA, he made some of the dispensings at his office. Indeed, the Clinical Trial Agreement expressly required that the ''Institution, Investigator and their personnel shall perform the Study *at Institution's facility.''* RX 14, at 2 (emphasis added).

. . . we were just to count the drug and send it away.'' *Id.* at 811.[26] Ms. Moore then reiterated that ''I was not keeping records for the DEA.'' *Id.* at 812.

Accordingly, I find that substantial evidence supports the conclusion that neither Dr. Nichol nor Respondent was maintaining dispensing records for the two studies which complied with federal law.[27] And because federal law requires that both the physician and the clinic are required to maintain records, *see Clinical Leasing,* 759 F. Supp. at 312; I conclude that Respondent violated federal law when it failed to maintain on a current basis, complete and accurate records of its dispensings of controlled substances. I thus reject the ALJ's conclusion that ''the Government has not cited to any regulatory or statutory provision resulting in a finding of wrongdoing done by the Respondent'' other than the violation which Ms. Moore committed when she accepted a shipment of controlled substances.[28] R.D. at 35; *see also* GX 14, at 13 (receipt for shipment of drugs signed by Ms. Moore on July 31, 2012).

The ALJ also declined to impute Dr. Nichol's violations of the separate registration provision to Respondent, reasoning that under Arkansas law, an employer is not responsible for the acts of its independent contractor. R.D. at 30. As support for her conclusion, the ALJ noted that Dr. Nichol's contract with Respondent stated that he was an independent contractor and not an employee. *Id.* at 31 (citing RX 16, at 6). The ALJ then explained:

> Ms. Moore testified that her vision of the Respondent's business is to provide site resources for the doctor who is conducting the research. Respondent's business is not meant to exercise control over the doctor's medical judgment nor is the Respondent meant to be primarily responsible for the research and recordkeeping. Additionally, the Respondent does not even pay Dr. Nichol for his services in conducting research at Respondent's place of business, but, rather, Dr. Nichol's payment is a 'pass-through' system of payment in which the Respondent pays Dr. Nichol once the Respondent receives funds from the Sponsoring Organization. Simply put, Dr. Nichol is not an employee or an agent of the Respondent because the Respondent does not exercise any control over Dr. Nichol's work; rather, the Respondent only offers Dr. Nichol a facility in which to conduct research.

R.D. at 31–32 (citing Tr. 381, 383–85; RX 16).

Not only is the ALJ's reasoning counterfactual, it reflects a stunning misunderstanding of the CSA. As for the ALJ's reliance on Ms. Moore's vision, it is beside the point.[29] Indeed, here, the evidence shows that Respondent did far more than ''provide site resources for [a] doctor who is conducting research.'' *Id.* Rather, the evidence shows that Ms. Moore sought out, and contracted with Dr. Nichol, to perform clinical research *for* Respondent, pursuant to contracts it might obtain from contract research organizations, *id.* at 387, and that upon receiving information that Quintiles would be managing clinical trials of NKTR–118, Ms. Moore applied for Respondent to participate in the study. RX 3, at 1.

Moreover, upon Respondent's being approved by Quintiles, Ms. Moore (on behalf of Respondent) and Dr. Nichol jointly agreed with Quintiles to ''perform the Study at [Respondent's] facility according to the Protocol and th[e] [Clinical Trial] Agreement.'' RX 14, at 2. Thus, the evidence shows that Respondent did not simply provide a facility for Dr. Nichol to undertake the research. To the contrary, Ms. Moore, on behalf Respondent, undertook to perform the clinical trials. Furthermore, it is clear that there was an agreement between Ms. Moore and Dr. Nichol to dispense controlled substances at Respondent's office. *See also* Tr. 57 (Ms. Moore's statement during May 2011 interview that Dr. Nichol ''would be present at the clinic [Respondent] three to four days a week.'').

Notwithstanding that Dr. Nichol was an independent contractor and not Respondent's employee, he was still obligated to comply with the terms of his agreement with Respondent, which required that he ''act in accordance and compliance with any and all applicable Federal, State, and local laws, rules, regulations, guidelines, including but not limited to the . . . CFR . . . as amended.'' RX 16, at 4. Indeed, Respondent had the power to terminate the agreement ''upon the breach of'' the agreement by Dr. Nichol and his failure to cure the breach. *Id.* at 5. Thus, even if Respondent could not exercise control over Dr. Nichol's medical decisions, she still retained authority to supervise various other aspects of his activities and to ensure that he complied with the requirements of federal law, including the CSA.[30] Accordingly, whether Dr. Nichol was an agent under the standards set forth in the Restatement of the Law (Third) Agency (2006), *see* R.D. at 31, the evidence shows that he clearly acted on Respondent's behalf in performing the Clinical Trial Agreement and Ms. Moore clearly knew that Dr. Nichol was dispensing controlled substances at Respondent. *See* 21 U.S.C. 802(3). Thus, Dr. Nichols' misconduct in dispensing controlled substances at Respondent's unregistered location is properly imputed to Respondent.

Indeed, even if the evidence is not sufficient to establish the existence of an

[26] Notably, Respondent does not argue that Respondent's Exhibits 23 and 24 (the NKTR–118 Accountability Forms) comply with the CSA and DEA regulations, notwithstanding that they document various dispensings. *See generally* Resp. Br. Indeed, in seeking admission of these documents, Respondent's counsel represented to the ALJ that they were offered ''for a very limited purpose, only with regard to the date of [the] last dispensal'' [sic] and that ''[w]e do not offer them for anything else with regard to the dispensal [sic] records.'' Tr. 750. The ALJ thus admitted these records—over the Government's objection—only ''for the limited purpose of'' showing the dates of the last dispensings. *Id.*

In any event, the records support the conclusion that Respondent failed to comply with federal recordkeeping obligations. Indeed, a review of these records shows that multiple entries are not in chronological order, thus indicating that these logs were not maintained on a current basis as required by federal law, but were created after the fact. *See* RX 24, at 3 (listing entries dated in following order: 25 Oct. 2011, 09 Nov. 2011, 15 Sep. 2011, 26 Sep. 2011, 22 Nov. 2011, 20 Dec. 2011); *id.* at 5–6 (single entry containing crossed-out date of 18 Aug., and two dates of 18 July 2012 and 15 Aug 2012). *See also* RX 23, at 11–13 (listing more dates of dispensings which are not in chronological order).

[27] In its post-hearing brief, the Government makes extensive arguments, based largely on the GS's audit, that the dispensing records Ms. Moore created were inaccurate. Gov. Br. 28–32. However, the Government never performed a physical count of the drugs on hand for the closing inventory. Instead, as found above, it based its closing inventory figures on records which showed inventories taken on various dates. GX 14, at 22. However, the GS ignored that these records (MCT Form 1) were not perpetual inventories. Thus, the GS simply added any quantities received in a new shipment to the previous balance, ignoring that the last count was dated weeks earlier and that dispensings had been ongoing. Tr. 90, 133. The GS also treated the last entry on each form as if it was a new shipment (adding it to the previous figure) when the forms indicated that the quantities were of the drugs that were ''unused/returned'' and ''kits remaining unused.'' *Id.* at 133. Moreover, the GS acknowledged that she did not ask either Dr. Nichol or Ms. Moore to explain what these entries showed. *Id.* at 134–35. As for the GS's testimony that she was simply following Ms. Moore's methodology, the GS never asked Ms. Moore to explain her methodology. *Id.*

Accordingly, I find the Government's contention not proved.

[28] As relevant here, under the CSA, it is ''unlawful for any person knowingly or intentionally to possess a controlled substance . . . except as otherwise authorized by this subchapter.'' 21 U.S.C. 844(a); *see also id.* § 822(b) (''Persons registered by the Attorney General under this subchapter to . . . distribute, or dispense controlled substances . . . are authorized to possess . . . distribute, or dispense such substances . . . to the extent authorized by their registration and in conformity with the other provisions of this subchapter.'').

[29] So too, the fact that Respondent was not contractually required to pay Dr. Nichol until it was paid is beside the point.

[30] It is not uncommon that pharmacies utilize the services of relief pharmacists, who are not employees, but rather independent contractors. Under the ALJ's theory, a pharmacy owned by a non-pharmacist could not be held liable for violations committed by a relief pharmacist who is an independent contractor.

agency relationship between Dr. Nichol and Respondent, the ALJ was simply mistaken in concluding that proof of an agency relationship was necessary to impute Nichol's misconduct to Respondent. Contrary to the ALJ's understanding, the CSA recognizes the principle of agency for the purpose of allowing ''an authorized person who acts on behalf of or at the direction of a manufacturer, distributor, or dispenser,'' 21 U.S.C. 802(3), to handle controlled substances without having to be registered as well. *See id.* § 822(c) (''The following persons shall not be required to register and may lawfully possess any controlled substance . . . under this subchapter: (1) An agent or employee of any registered manufacturer, distributor, or dispenser of any controlled substance . . . if such agent or employee is acting in the usual course of his business or employment.''). The CSA's agency provision does not, however, limit the liability of a person for the misconduct of another to the circumstance in which the latter acts as an agent of the former. Thus, while obviously any misconduct in handling controlled substances which is committed by an agent in the course of the agency is properly imputed to his principal, *see Mediplas Innovations,* 67 FR 41256 (2002),[31] this is not the only basis for imputing Dr. Nichol's violations of the separate registration requirement to Respondent and Ms. Moore.

Significantly, Dr. Nichol's violations can be imputed to Respondent because Ms. Moore knowingly aided and abetted Dr. Nichol's violations. *Cf.* 18 U.S.C. 2; *FDIC* v. *First Interstate Bank of Des Moines, N.A.,* 885 F.2d 423, 431 (8th Cir. 1989) (noting that ''under the common law, liability is sufficiently established by an aider-abettor's knowledge of the wrong and its awareness of its assistance in furthering the scheme'') (citing *Restatement (Second) of Torts* § 876 comment d (other citation omitted)). Here, in addition to the Clinical Trial Agreement (by which Respondent, through Ms. Moore, and Dr. Nichol agreed with Quintiles to ''perform the Study at [Respondent's] facility,'' RX 14, at 2), the evidence shows that Ms. Moore provided Respondent's facility to Dr. Nichol for the purpose of performing the clinical studies.

Moreover, the evidence shows that Respondent did not have a registration to conduct research, Tr. 62, and that during the February 15, 2011 site selection visit, Quintiles' representative informed both Ms. Moore and Dr. Nichol that ''[t]he site must obtain a DEA license for research with a controlled substance.'' RX 4, at 1; *see also* Tr. 400 (testimony of Ms. Moore that sponsor told her and Nichol that ''based on the scheduling [of NKTR–118], then the sites [sic] would need a DEA license''). So too, the evidence shows that Dr. Nichol was not registered at Respondent and Ms. Moore knew this. [32] Tr. 487; RX 22, at 1. Finally, the evidence further shows that Dr. Nichol proceeded to dispense controlled substances at Respondent's office when neither he, nor Respondent, held a registration at this location and did so on numerous occasions through at least April 2012.[33] Thus, the evidence establishes that Ms. Moore and Respondent aided and abetted Dr. Nichol's violations of section 822(e), by allowing him to dispense at Respondent's office, which was not registered.

I therefore reject the ALJ's conclusion that Dr. Nichol's violations of section 822(e) cannot be imputed to Ms. Moore and Respondent.[34] Moreover, as

[31] Citing *Mediplas Innovations,* 67 FR 41256 (2002) and *Daniel Koller, D.V.M.,* 71 FR 66975 (2006), the ALJ explained that these decisions ''regarding imputing a worker's conduct to an employer turn on the fact that the worker was deemed an agent of the employer.'' R.D. at 31. The ALJ misread both cases.

In *Mediplas,* the Agency held that a firm, which sought to import list I chemicals, was liable for the failure of its customs broker to timely file import notification forms (DEA—486), explaining that the firm had a statutory duty to file the forms and that under the law of agency, it was liable ''for its agent's failure to timely file'' the forms. 67 FR at 41262 (citing, *inter alia, Restatement (Second) of Agency* §§ 272, 275, 277 (1958)). While the liability of a principal for the acts committed by an agent in the course of its agency is hardly disputable, *Mediplas* simply does not address whether, absent an agency or employment relationship, a person can be held liable under the CSA for the misconduct of another person, such as a co-conspirator.

Nor does *Koller* support the ALJ's reasoning. Rather, *Koller* simply addressed whether a relief veterinarian, who was an independent contractor and not an employee of a clinic owner, could act as an agent of the owner and lawfully dispense controlled substances under the exemption from registration provided under 21 U.S.C. 822(c). *See* 71 FR 66975.

[32] Obviously, Dr. Nichol knew that he was not registered at Respondent.

[33] As for Ms. Moore's testimony that she did not think it was illegal for Dr. Nichol to bring the controlled substances to Respondent and dispense them there, this is not a mistake of fact, but rather, a mistake of law. As such, even if I deemed it credible, it offers no comfort to Respondent.

Moreover, the record shows that at the April 2011 meeting, the DIs provided Ms. Moore with the Code of Federal Regulations. Among the regulations contained therein are 21 CFR 1301.11, which requires that ''[e]very person who . . . dispenses . . . any controlled substances or who proposes to engage in the . . . dispensing of any controlled substance shall obtain a registration unless exempted by law or'' regulation, and as well as 21 CFR 1301.12, which provides that ''[a] separate registration is required for each principal place of professional practice at one general physical location where controlled substances are . . . dispensed by a person.'' *See also* 21 CFR 1301.12(b)(3) (exempting from the separate registration requirement, ''[a]n office used by a practitioner . . . where controlled substances are prescribed *but neither administered nor otherwise dispensed* as a regular part of the professional practice of the practitioner at such office, and where no supplies of controlled substances are maintained.'') (emphasis added).

As the Fifth Circuit has recognized, the statute (21 U.S.C. 822(e)) and regulation provide fair notice such that:

A physician of ordinary means and intelligence would understand that the federal registration provisions apply to *each* important or consequential place of business where the physician distributes controlled substances. It is sufficiently clear that the application of the provisions is not limited to a *single* important or consequential place of business where controlled substances are distributed.

Clinical Leasing Serv., 925 F.2d at 123 (emphasis added). Moreover, Ms. Moore admitted that she never asked DEA whether Dr. Nichol could lawfully transport the controlled substances to Respondent and dispense them there. Tr. 538. *See Clinical Leasing Serv.,* 925 F.2d at 122 (''licensing or registration requirements, are afforded considerable deference in the vagueness analysis because the regulated party may 'have the ability to clarify the meaning of the regulation[s] by its own inquiry, or by resort to an administrative process'''') (quoting *Village of Hoffman Estates* v. *Flipside, Hoffman Estates, Inc.,* 455 U.S. 489, 498 (1991)).

[34] So too, liability can be imputed based on proof that a conspiracy existed, even where the conspiracy had a lawful objective but was carried out through unlawful means. *See* 21 U.S.C. 846 (''Any person who . . . conspires to commit any offense defined in this subchapter [*i.e.,* the CSA] shall be subject to the same penalties as those prescribed for the offense, the commission of which was the object of the . . . conspiracy.'').

To establish the existence of a conspiracy, the Government ''must prove there was a conspiracy with an illegal purpose, that the defendant was aware of the conspiracy, and that [s]he knowingly became a part of it. Moreover, there must be evidence that the defendant entered into an agreement with at least one other person and that the agreement had as its objective a violation of law.'' *United States* v. *Fitz,* 317 F.3d 878, 881 (8th Cir. 2003) (citations omitted). Proof of the existence of an agreement '''does not require evidence of a formal or express agreement''' but only evidence '''that the parties have a tacit understanding to carry out the prohibited conduct.''' *United States* v. *Nusraty,* 867 F.2d 759, 763 (2d Cir. 1989) (quoting *United States* v. *Rubin,* 844 F.2d 979, 984 (2d Cir. 1988)) (other citation omitted).

However, because the act of entering into a conspiracy is itself an actionable offense, the Government was required to allege this in either the Show Cause Order or its Pre-Hearing Statements. I therefore do not rely on this theory.

By contrast, the aiding and abetting statute does not create a separate offense, but simply ''abolishes the distinction between common law notions of 'principal' and 'accessory.''' *United States* v. *Kegler,* 724 F.2d 190, 200 (D.C. Cir. 1983). Accordingly, in a criminal prosecution, ''[a]iding and abetting . . . need not be alleged in the indictment.'' *United States* v. *Alexander,* 447 F.3d 1290, 1298 (10th Cir. 2006). *See also United States* v. *Good Shield,* 544 F.2d 900, 952 (8th Cir. 1976) (''Aiders and abettors and those causing an act to be done are punishable as principals. The indictment may charge a defendant as a principal, and need not specifically allege that he aided and abetted in the commission of the crime.'').

discussed above, Ms. Moore and Respondent violated federal law by failing to maintain complete and accurate dispensing records. These findings support the conclusion that granting Respondent's application ''would be inconsistent with the public interest.'' 21 U.S.C. 823(f).

Sanction

Under Agency precedent, where, as here, ''the Government has proved that [an applicant] has committed acts inconsistent with the public interest, [the applicant] must ' ''present sufficient mitigating evidence to assure the Administrator that it can be entrusted with the responsibility carried by such a registration.'' ' '' *Medicine Shoppe-Jonesborough,* 73 FR 364, 387 (2008) (quoting *Samuel S. Jackson,* 72 FR 23848, 23853 (2007) (quoting *Leo R. Miller,* 53 FR 21931, 21932 (1988))).

''Moreover, because 'past performance is the best predictor of future performance,' *ALRA Labs, Inc.* v. *DEA,* 54 F.3d 450, 452 (7th Cir. 1995), [DEA] has repeatedly held that where [an applicant] has committed acts inconsistent with the public interest, the registrant must accept responsibility for its actions and demonstrate that it will not engage in future misconduct.'' *Medicine Shoppe,* 73 FR at 387; *see also Jackson,* 72 FR at 23853; *John H. Kennedy,* 71 FR 35705, 35709 (2006); *Prince George Daniels,* 60 FR 62884, 62887 (1995). *See also Hoxie* v. *DEA,* 419 F.3d at 483 (''admitting fault'' is ''properly consider[ed]'' by DEA to be an ''important factor[]'' in the public interest determination). So too, in making the public interest determination, ''this Agency also places great weight on an [applicant's] candor, both during an investigation and in [a] subsequent proceeding.'' *Robert F. Hunt,* 75 FR 49995, 50004 (2010) (citing *The Lawsons, Inc., t/a The Medicine Shoppe Pharmacy,* 72 FR 74334, 74338 (2007) quoting *Hoxie,* 419 F.3d at 483 (''Candor during DEA investigations properly is considered by the DEA to be an important factor when assessing whether a . . . registration is consistent with the public interest.'')).

While an applicant must accept responsibility and demonstrate that it will not engage in future misconduct in order to establish that granting its application is consistent with the public interest, DEA has repeatedly held these are not the only factors that are relevant in determining the appropriate sanction. *See, e.g., Joseph Gaudio,* 74 FR 10083, 10094 (2009); *Southwood Pharmaceuticals, Inc.,* 72 FR 36487, 36504 (2007). Obviously, the egregiousness and extent of a registrant's misconduct are significant factors in determining the appropriate sanction. *See Jacobo Dreszer,* 76 FR 19386, 19387–88 (2011) (explaining that a respondent can ''argue that even though the Government has made out a *prima facie* case, his conduct was not so egregious as to warrant revocation''); *Paul H. Volkman,* 73 FR 30630, 30644 (2008); *see also Gregory D. Owens,* 74 FR 36751, 36757 n.22 (2009).

Moreover, as I have noted in several cases, ' '[n]either *Jackson,* nor any other agency decision, holds . . . that the Agency cannot consider the deterrent value of a sanction in deciding whether a registration should be [suspended or] revoked.' '' *Gaudio,* 74 FR at 10094 (quoting *Southwood,* 72 FR at 36503 (2007)); *see also Robert Raymond Reppy,* 76 FR 61154, 61158 (2011); *Michael S. Moore,* 76 FR 45867, 45868 (2011). This is so, both with respect to the respondent in a particular case and the community of registrants. *See Gaudio,* 74 FR at 10095 (quoting *Southwood,* 71 FR at 36504). *Cf. McCarthy* v. *SEC,* 406 F.3d 179, 188–89 (2d Cir. 2005) (upholding SEC's express adoption of ''deterrence, both specific and general, as a component in analyzing the remedial efficacy of sanctions'').

The ALJ reasoned that while ''[t]he record is filled with wrongdoing done by Dr. Nichol . . . his wrongdoing is not imputed to Respondent'' and that the only violation Respondent ''had . . . to be remorseful about,'' was Ms. Moore's act of signing for, and taking possession of, the July 31, 2012 shipment of controlled substances. R.D. at 35. While acknowledging that ''Ms. Moore did not express any remorse for this wrongdoing,'' the ALJ concluded that ''this one incident is [not] enough to deny the Respondent a DEA registration.'' *Id.*

As explained above, the ALJ's conclusion rests upon the erroneous premise that Ms. Moore is only responsible for her act of taking possession of a shipment of controlled substances. Rather, the evidence shows that Ms. Moore aided and abetted Dr. Nichol's violations of the CSA by dispensing controlled substance at an unregistered location. *See* 21 U.S.C. 822(e), 841(a)(1), 846. As explained above, this misconduct constitutes a violation of one of the CSA's core provisions.

Yet Ms. Moore utterly failed to acknowledge her misconduct, insisting that she did not understand that: (1) Respondent could not dispense controlled substances without first obtaining a DEA registration, Tr. 537, 539; and (2) it was illegal for Dr. Nichol to dispense controlled substances at Respondent. *Id.* at 539. Not only is Ms. Moore's ignorance of the law no excuse, *see Sigrid Sanchez, M.D.,* 78 FR 3933, 39336 (2013); her assertions are extraordinary when considered in light of the facts that: (1) She was explicitly told by the Quintiles representative that Respondent must obtain a DEA license, RX 4; (2) she was provided with a copy of the Code of Federal Regulations, Tr. 274; and (3) she admitted that she never asked DEA Investigators if Dr. Nichol could lawfully transport the drugs to Respondent and dispense them there. *Id.* at 538.

Ms. Moore also failed to accept responsibility for Respondent's recordkeeping violations. Ms. Moore did not address at all the failure to properly annotate the Schedule II order forms with the date of receipt and quantity of drugs received. Moreover, while both

---

Of significance here, '''''[p]leadings in administrative proceedings are not judged by the standards applied to an indictment at common law.''''' *Citizens States Bank of Marshfield* v. *FDIC,* 751 F.2d 209, 213 (8th Cir. 1984) (quoting *Aloha Airlines* v. *Civil Aeronautics Bd.,* 598 F.2d 250, 262 (D.C. Cir. 1979)) (quoted in *George Mathew, M.D.,* 75 FR 66138, 66146 n.20 (2010)). ''An agency is not required ''to give every [Respondent] a complete bill of particulars as to every allegation that [he] will confront.''' *Boston Carrier, Inc.,* v. *ICC,* 746 F.2d 1555, 1560 (D.C. Cir. 1984) (quoted in *Mathew,* 75 FR at 66146 n.20). ''Thus, the failure of the Government to disclose an allegation in the Order to Show Cause is not dispositive, and an issue can be litigated if the Government otherwise timely notifies a respondent of its intent to litigate the issue.'' *Mathew,* 75 FR at 66146 n.20. *See also Darrell Risner, D.M.D.,* 61 FR 728, 730 (1996) (''the parameters of the hearing are determined by the prehearing statements''); *accord Nicholas A. Sychak,* 65 FR 75959, 75961 (2000).

Here, the Government provided adequate notice that it intended to litigate the issue of Dr. Nichol's transporting controlled substances to Respondent's office to dispense them there and that this was illegal because he was not registered at that location. *See* Gov. Second Supplemental Prehearing Statement, at 1–2. More specifically, the Government disclosed that it intended to sponsor testimony from the GS that she was told by a Quintiles employee that ''the MCT study situation was unique in that they had to send the drugs to Dr. Nichol who then transported them to MCT to dispense.'' *Id.* at 1. The Government further disclosed that the GS would testify that she contacted Dr. Nichol's attorney and ''informed him of the problems with transporting and dispensing drug from an unregistered location and that it was not legal to do so unless the location was registered'' and that ''Dr. Nichol needed to be registered at the MCT location if he wished to dispense there.'' *Id.* The Government then disclosed that the GS would testify that on August 22, 2012, she received a letter from Dr. Nichol's attorney which ''assured her that Dr. Nichol would administer the controlled substances for research at his DEA approved address.'' *Id.* at 2.

Finally, the Government disclosed that the GS would testify that during the August 24, 2012 meeting with Ms. Moore, the latter ''admitted that Dr. Nichol was dispensing [NKTR–118] from MCT both at the new and old locations for MCT.'' *Id.* I thus conclude that Respondent had adequate notice that the issue would be litigated.

Respondent and Dr. Nichol failed to maintain dispensing records on a current basis, *see* 21 U.S.C. 827(a)(3); 21 CFR 1304.21(a), Ms. Moore asserted that she was not aware that Dr. Nichol was required to keep controlled substances records for the studies until August 24, 2012. Tr. 822–23. As for Respondent's failure to keep records, Ms. Moore asserted that ''[n]owhere in keeping records was there ever any indication, until [the GS] came to my site, that we were to keep two sets of books. I never heard that, but I'm not a registrant, so maybe if I were, I would have heard it and known that.'' *Id.* at 565.

However, as stated above, during the April 2011 on-site inspection, Ms. Moore was provided with the Code of Federal Regulations. Tr. 274. And during the visit, one of the DIs explained the recordkeeping requirements to Ms. Moore. *Id.* Regardless of whether Ms. Moore was required to keep two sets of books, Respondent was obligated to maintain current records of the controlled substances that were received and dispensed by Respondent and Dr. Nichol. Here again, Ms. Moore's testimony manifests that she does not accept responsibility for the failure of Respondent and Dr. Nichol to keep records that complied with the CSA. Indeed, Ms. Moore's testimony is all the more remarkable in light of the fact that it occurred at a hearing at which the issue was whether her entity should be granted a registration. *Cf. 4 OTC, Inc.,* 77 FR 35031, 35035 (2012) (''it is not too much to expect that an applicant seeking to show its intent to comply with applicable state laws, would produce [Standard Operating Procedures] which were not riddled with misstatements of those laws and which correctly reflected those States where its proposed method of operations would be unlawful'').

I therefore hold that Ms. Moore has failed to accept responsibility for her (and Respondent's) misconduct. *See Jeffery P. Gunderson,* 61 FR 62884, 62887 (1996). While there is no evidence that any of the drugs that were dispensed in the NKTR–118 study were diverted, both the registration and recordkeeping violations involve core provisions of the CSA. Moreover, Respondent's violations of the registration requirements were clearly intentional. Accordingly, Ms. Moore's failure to acknowledge her wrongdoing provides ample reason to reject Respondent's application. This conclusion is buttressed by the ALJ's finding that Ms. Moore lacked candor when she testified ''concerning where the controlled substance was actually dispensed.'' R.D. at 34 (citing *Jeri Hassman, M.D.,* 75 FR 8,194, 8236 (2010), *pet. for rev. denied, Hassman* v. *Office of the Deputy Administrator,* No. 10–70684 (9th Cir., Apr. 9, 2013)).

To be sure, Ms. Moore put on some evidence of her willingness to comply with the CSA and Agency regulations, including her installation of the alarm, her timely provision of information to investigators, and her efforts to create compliant records. However, where, as here, the evidence shows that an applicant has engaged in knowing or intentional misconduct, Agency precedent has long held that the acknowledgement of such misconduct is an essential element of rebutting the Government's *prima facie* case. *See Hoxie* v. *DEA,* 419 F.3d at 483; *see also Medicine Shoppe,* 73 FR at 387; *Kennedy,* 71 FR at 35709; *Daniels,* 60 FR at 62887. And in any event, the weight to be given Ms. Moore's evidence of her willingness to comply is greatly diminished by her aiding and abetting Dr. Nichol's violations of federal law when he dispensed at an unregistered location. Moreover, Ms. Moore's testimony shows that she still does not understand the scope of the recordkeeping obligations of a DEA registrant.

Accordingly, I conclude that Respondent's application should be denied.

Order

Pursuant to the authority vested in me by 21 U.S.C. 823(f) and 28 CFR 0.100(b), I order that the application of Moore Clinical Trials, L.L.C., for a DEA Certificate of Registration as a Researcher, be, and it hereby is, denied. This Order is effective immediately.

Dated: July 2, 2014.

Michele M. Leonhart,

Administrator.

[FR Doc. 2014–16162 Filed 7–10–14; 8:45 am]

BILLING CODE 4410–09–P

DEPARTMENT OF JUSTICE

Drug Enforcement Administration

[Docket No. DEA–392]

Importer of Controlled Substances Application: Research Triangle Institute

ACTION: Notice of application.

DATES: Registered bulk manufacturers of the affected basic classes, and applicants therefore, may file written comments on or objections to the issuance of the proposed registration in accordance with 21 CFR 1301.34(a) on or before August 11, 2014. Such persons may also file a written request for a hearing on the application pursuant to 21 CFR 1301.43 on or before August 11, 2014.

ADDRESSES: Written comments should be sent to: Drug Enforcement Administration, Attention: DEA Federal Register Representative/ODW, 8701 Morrissette Drive, Springfield, Virginia 22152.

SUPPLEMENTARY INFORMATION: The Attorney General has delegated his authority under the Controlled Substances Act to the Administrator of the Drug Enforcement Administration (DEA), 28 CFR 0.100(b). Authority to exercise all necessary functions with respect to the promulgation and implementation of 21 CFR part 1301, incident to the registration of manufacturers, distributors, and dispensers of controlled substances (other than final orders in connection with suspension, denial, or revocation of registration) has been redelegated to the Deputy Assistant Administrator of the DEA Office of Diversion Control (''Deputy Assistant Administrator'') pursuant to sec. 7(g) of 28 CFR part 0, subpart R, App.

In accordance with 21 CFR 1301.34(a), this is notice that on April 8, 2014, Research Triangle Institute, Kenneth S. Rehder, Ph.D., Hermann Building East Institute Drive, P.O. Box 12194, Research Triangle Park, North Carolina 27709, applied to be registered as an importer of the following basic classes of controlled substances:

Controlled substance	Schedule
AM-2201 (7201)	I
AM-694 (7694)	I
JWH-018 (7118)	I
JWH-073 (7173)	I
JWH-200 (7200)	I
JWH-250 (6250)	I
JWH-019 (7019)	I
JWH-081 (7081)	I
SR-19 and RCS-4 (7104)	I
JWH-122 (7122)	I
JWH-203 (7203)	I
JWH-398 (7398)	I
1-(1-Phenylcyclohexyl)pyrrolidine (7458).	I
1-[1-(2-Thienyl)cyclohexyl]piperidine (7470).	I
1-[1-(2-Thienyl)cyclohexyl]pyrrolidine (7473).	I
1-Methyl-4-phenyl-4-propionoxypiperidine (9661).	I
1-(2-Phenylethyl)-4-phenyl-4-acetoxypiperidine (9663).	I
2-(4-chloro-2,5-dimethoxyphenyl)-N-(2-methoxybenzl) ethanamine (25C-NBOMe) (7537).	I

Controlled substance	Schedule
2-(4-iodo-2,5-dimethoxyphenyl)-N-(2-methoxybenzl) ethanamine (25I-NBOMe) (7538).	I
2,5-Dimethoxy-4-ethylamphetamine (7399).	I
2,5-Dimethoxyamphetamine (7396).	I
2C-D (7508)	I
2C-E (7509)	I
2C-H (7517)	I
2C-N (7521)	I
2C-P (7524)	I
2C-T-2 (7385)	I
2C-T-7 (7348)	I
2C-I (7518)	I
2C-C (7519)	I
2C-T-4 (7532)	I
3,4,5-Trimethoxyamphetamine (7390).	I
3,4-Methylenedioxyamphetamine (7400).	I
3,4-Methylenedioxymethamphetamine (7405).	I
3,4-Methylenedioxy-N-ethylamphetamine (7404).	I
3-Fluoro-N-methylcathinone (3-FMC) (1233).	I
3-Methylfentanyl (9813)	I
3-Methylthiofentanyl (9833)	I
4-Bromo-2,5-dimethoxyamphetamine (7391).	I
4-Bromo-2,5-dimethoxyphenethylamine (7392).	I
4-Fluoro-N-methylcathinone (4-FMC) (1238).	I
4-Methyl-2,5-dimethoxyamphetamine (7395).	I
4-Methyl-alphapyrrolidinopropiophenone (4-MePPP) (7498).	I
4-Methylaminorex (cis isomer) (1590).	I
4-Methyl-N-ethylcathinone (4-MEC) (1249).	I
4-Methoxyamphetamine (7411)	I
CP-47, 497 C8-homolog (7298)	I
5-Fluoro-PB-22; 5F-PB-22 (7225)	I
5-Methoxy-3,4-methylenedioxyamphetamine (7401).	I
5-Methoxy-N-N-dimethyltryptamine (7431).	I
5-Methoxy-N,N-diisopropyltryptamine (7439).	I
AB-FUBINACA (7012)	I
Acetorphine (9319)	I
Acetyl-alpha-methylfentanyl (9815).	I
Acetyldihydrocodeine (9051)	I
Acetylmethadol (9601)	I
ADB-PINACA (7035)	I
Allylprodine (9602)	I
Alphacetylmethadol except levo-alphacetylmethadol (9603).	I
Alpha-ethyltryptamine (7249)	I
Alphameprodine (9604)	I
Alphamethadol (9605)	I
Alpha-methylfentanyl (9814)	I
Alpha-methylthiofentanyl (9832)	I
Alpha-methyltryptamine (7432)	I
alpha-pyrrolidinopentiophenone (α-PVP) (7545).	I
alpha-pyrrolidinopentiophenone (α-PBP) (7546).	I
Aminorex (1585)	I
APINACA and AKB48 (7048)	I
Benzethidine (9606)	I
Benzylmorphine (9052)	I
Betacetylmethadol (9607)	I
Beta-hydroxy-3-methylfentanyl (9831).	I
Beta-hydroxyfentanyl (9830)	I
Betameprodine (9608)	I
Betamethadol (9609)	I
Betaprodine (9611)	I
Bufotenine (7433)	I
Butylone (7541)	I
CP-47, 497 (7297)	I
Cathinone (1235)	I
Clonitazene (9612)	I
Codeine methylbromide (9070)	I
Codeine-N-Oxide (9053)	I
Cyprenorphine (9054)	I
Desomorphine (9055)	I
Dextromoramide (9613)	I
Diampromide (9615)	I
Diethylthiambutene (9616)	I
Diethyltryptamine (7434)	I
Difenoxin (9168)	I
Dihydromorphine (9145)	I
Dimenoxadol (9617)	I
Dimepheptanol (9618)	I
Dimethylthiambutene (9619)	I
Dimethyltryptamine (7435)	I
Dioxaphetyl butyrate (9621)	I
Dipipanone (9622)	I
Drotebanol (9335)	I
Ethylmethylthiambutene (9623)	I
Etonitazene (9624)	I
Etorphine HCl (9056)	I
Etoxeridine (9625)	I
Fenethylline (1503)	I
Furethidine (9626)	I
Heroin (9200)	I
Hydromorphinol (9301)	I
Hydroxypethidine (9627)	I
Gamma Hydroxybutyric Acid (2010).	I
Ibogaine (7260)	I
Ketobemidone (9628)	I
Levomoramide (9629)	I
Levophenacylmorphan (9631)	I
Lysergic acid diethylamide (7315)	I
MDPV (7535)	I
Marihuana (7360)	I
Mecloqualone (2572)	I
Mephedrone (1248)	I
Mescaline (7381)	I
Methaqualone (2565)	I
Methcathinone (1237)	I
Methyldesorphine (9302)	I
Methyldihydromorphine (9304)	I
Methylone (7540)	I
Morpheridine (9632)	I
Morphine methylbromide (9305)	I
Morphine methylsulfonate (9306)	I
Morphine-N-Oxide (9307)	I
Myrophine (9308)	I
N,N-Dimethylamphetamine (1480)	I
N-Benzylpiperazine (7493)	I
N-Ethyl-3-piperidyl benzilate (7482).	I
N-Ethylamphetamine (1475)	I
N-Ethyl-1-phenylcyclohexylamine (7455).	I
N-Hydroxy-3,4-methylenedioxyamphetamine (7402).	I
Naphyrone (1258)	I
Nicocodeine (9309)	I
Nicomorphine (9312)	I
N-Methyl-3-piperidyl benzilate (7484).	I
Noracymethadol (9633)	I
Norlevorphanol (9634)	I
Normethadone (9635)	I
Normorphine (9313)	I
Norpipanone (9636)	I
Para-Fluorofentanyl (9812)	I
Parahexyl (7374)	I
Pentedrone (α-methylaminovalerophenone) (1246).	I
Pentylone (7542)	I
Peyote (7415)	I
Phenadoxone (9637)	I
Phenampromide (9638)	I
Phenomorphan (9647)	I
Phenoperidine (9641)	I
Pholcodine (9314)	I
Piritramide (9642)	I
Proheptazine (9643)	I
Properidine (9644)	I
Propiram (9649)	I
Psilocybin (7437)	I
Psilocyn (7438)	I
PB-22 (7222)	I
Racemoramide (9645)	I
SR-18 and RCS–8 (7008)	I
Tetrahydrocannabinols (7370)	I
Thebacon (9315)	I
Thiofentanyl (9835)	I
Tilidine (9750)	I
Trimeperidine (9646)	I
UR-144 (7144)	I
1-Phenylcyclohexylamine (7460)	II
1-Piperidinocyclohexanecarbonitrile (8603).	II
4-Anilino-N-phenethyl-4-piperidine (8333).	II
Alfentanil (9737)	II
Alphaprodine (9010)	II
Amobarbital (2125)	II
Amphetamine (1100)	II
Anileridine (9020)	II
Bezitramide (9800)	II
Carfentanil (9743)	II
Coca Leaves (9040)	II
Cocaine (9041)	II
Codeine (9050)	II
Dextropropoxyphene, bulk (non-dosage forms) (9273).	II
Dihydrocodeine (9120)	II
Dihydroetorphine (9334)	II
Diphenoxylate (9170)	II
Ecgonine (9180)	II
Ethylmorphine (9190)	II
Etorphine HCl (9059)	II
Fentanyl (9801)	II
Glutethimide (2550)	II
Hydrocodone (9193)	II
Hydromorphone (9150)	II
Isomethadone (9226)	II
Levo-alphacetylmethadol (9648)	II
Levomethorphan (9210)	II
Levorphanol (9220)	II
Lisdexamfetamine (1205)	II
Meperidine (9230)	II

Controlled substance	Schedule
Meperidine intermediate-A (9232)	II
Meperidine intermediate-B (9233)	II
Meperidine intermediate-C (9234)	II
Metazocine (9240)	II
Methadone (9250)	II
Methadone-Intermediate (9254)	II
Methamphetamine (1105)	II
Methylphenidate (1724)	II
Metopon (9260)	II
Moramide intermediate (9802)	II
Morphine (9300)	II
Nabilone (7379)	II
Noroxymorphone (9668)	II
Opium, raw (9600)	II
Opium extracts (9610)	II
Opium fluid (9620)	II
Opium tincture (9630)	II
Opium poppy/Poppy Straw (9650)	II
Oripavine (9330)	II
Poppy Straw Concentrate (9670)	II
Opium, granulated (9640)	II
Oxycodone (9143)	II
Oxymorphone (9652)	II
Pentobarbital (2270)	II
Phenazocine (9715)	II
Phencyclidine (7471)	II
Phenmetrazine (1631)	II
Phenylacetone (8501)	II
Piminodine (9730)	II
Opium, powdered (9639)	II
Racemethorphan (9732)	II
Racemorphan (9733)	II
Remifentanil (9739)	II
Secobarbital (2315)	II
Sufentanil (9740)	II
Tapentadol (9780)	II
Thebaine (9333)	II

The company plans to import small quantities of the listed controlled substances for the National Institute on Drug Abuse for research activities.

In reference to drug codes 7360 and 7370, the company plans to import a synthetic cannabidiol and a synthetic tetrahydrocannabinol. No other activity for this drug code is authorized for this registration.

Comments and requests for hearings on applications to import narcotic raw material are not appropriate. 72 FR 3417 (January 25, 2007).

In regard to the non-narcotic raw material, any bulk manufacturer who is presently, or is applying to be, registered with the DEA to manufacture such basic classes of controlled substances listed in schedules I or II, which fall under the authority of section 1002(a)(2)(B) of the Act (21 U.S.C. 952(a)(2)(B)) may, in the circumstances set forth in 21 U.S.C. 958(i), file comments or objections to the issuance of the proposed registration and may, at the same time, file a written request for a hearing on such application pursuant to 21 CFR 1301.43 and in such form as prescribed by 21 CFR 1316.47.

Dated: July 2, 2014.

Joseph T. Rannazzisi,

Deputy Assistant Administrator.

[FR Doc. 2014–16161 Filed 7–10–14; 8:45 am]

BILLING CODE 4410–09–P

DEPARTMENT OF JUSTICE

National Institute of Justice

[OJP (NIJ) Docket No. 1662]

National Institute of Justice Compliance Testing Program's Compliant Product List for Ballistic Body Armor

AGENCY: National Institute of Justice, Department of Justice.

ACTION: Notice.

SUMMARY: Notice regarding the removal of Compliant Product Lists (CPL) of ballistic resistant body armor models that met superseded versions of the National Institute of Justice (NIJ) Body Armor Standard.

DATES: *Effective:* August 25, 2014.

FOR FURTHER INFORMATION CONTACT: Daniel Longhurst, NIJ CTP by email at *bactp@justnet.org*, or by telephone at (202) 616–3857.

SUPPLEMENTAL INFORMATION: The National Institute of Justice (NIJ)-supported Compliance Testing Program (CTP) publishes on-line Compliant Product Lists (CPLs) of ballistic resistant body armor models that have satisfactorily demonstrated compliance with NIJ's Body Armor Standard.

It has been NIJ's practice to continue to provide the CPLs associated with superseded versions of the standard for purposes of historical reference. The NIJ CTP currently provides four CPLs associated with the following four specifications:

1. NIJ Standard 0101.03, Ballistic Resistance of Police Body Armor;
2. NIJ Standard-0101.04, Ballistic Resistance of Personal Body Armor;
3. NIJ 2005 Interim Requirements for Bullet-Resistant Body Armor; and
4. NIJ Standard-0101.06, Ballistic Resistance of Body Armor. (Current)

Each subsequent version of the Body Armor standard incorporates new research and understanding of body armor performance with direct implications for officer safety. The existence of the CPLs associated with superseded versions of the NIJ Body Armor Standard may lead officers and agencies to believe that the body armor models listed on those CPLs have been tested to the most current version of the NIJ Body Armor Standard. To eliminate the potential for such confusion, the CTP intends to remove all older versions of the CPLs and only maintain the CPL associated with the current version of the NIJ Body Armor Standard.

When NIJ Standard 0101.06 is next revised, and for future revisions beyond that, NIJ plans to maintain the superseded CPL for a period of 12-months after publication of the revised standard to enable agencies to complete purchasing actions initiated, but not completed, when the prior version of the standard was in effect.

Greg Ridgeway,

Acting Director, National Institute of Justice.

[FR Doc. 2014–16212 Filed 7–10–14; 8:45 am]

BILLING CODE 4410–18–P

DEPARTMENT OF JUSTICE

National Institute of Justice

[OJP (NIJ) Docket No. 1665]

License Plate Reader Manufacturer Practical Assessment of Proposed Test Methods

AGENCY: National Institute of Justice, Department of Justice.

ACTION: Notice of License Plate Reader Manufacturer Practical Assessment of Proposed Test Methods.

SUMMARY: The National Institute of Justice (NIJ) is inviting manufacturers of vehicle-mounted license plate reader (LPR) systems to participate in a practical assessment of the proposed test methods in the tentatively titled Vehicle-mounted License Plate Recognition Systems for Law Enforcement standard under development.

DATES: Manufacturers wishing to participate must register with the International Association of Chiefs of Police no later than Friday, August 8, 2014, as instructed below. Test evaluations will take place over two days, Tuesday, August 19, 2014, and Wednesday, August 20, 2014, with a rain date of Thursday, August 21, 2014, from 10:00 a.m. to 4:00 p.m. The test facility will be available for manufacturers to view the test setup and prepare their vehicles from 9:00 to 10:00 a.m.

ADDRESSES: *Location:* U.S. Customs and Border Protection Government Test Lane Facility (GTLF) in Fredericksburg, Virginia. Directions to the facility will be provided upon registration.

FOR FURTHER INFORMATION CONTACT: Manufacturers wishing to participate must register with the International Association of Chiefs of Police by August 8, 2014. To register for the LPR

manufacturer practical assessment, please contact Michael Fergus at *fergus@theiacp.org.*

For information about the NIJ Vehicle-mounted License Plate Recognition Systems for Law Enforcement under development, please contact Mark Greene, by telephone at (202) 307–3384 [Note: this is not a toll-free telephone number], or by email at *mark.greene2@usdoj.gov.* For general information about NIJ standards, please visit *http://www.nij.gov/standards* or *http://www.justnet.org/standards.*

SUPPLEMENTARY INFORMATION: The National Institute of Justice (NIJ) is inviting manufacturers of vehicle-mounted license plate reader (LPR) systems to participate in a practical assessment of the proposed test methods in the tentatively titled Vehicle-mounted License Plate Recognition Systems for Law Enforcement standard under development. The development of this draft NIJ standard is being facilitated by IACP with support from and in coordination with NIJ under cooperative agreement 2009–IJ–CX–K009. It contains several practical tests to determine the performance of vehicle-mounted LPR systems regarding four specific functions: detection of plates, capture of images of the plates, interpretation and conversion of images into alphanumeric data, and comparison of data with a list of specified license plates (e.g., a watch list). The tests are performed using license plates set up to mimic the different common parking configurations: parallel, perpendicular, and diagonal.

The practical assessment is primarily intended to allow LPR manufacturers to familiarize themselves with tests for vehicle-mounted LPR systems in the draft NIJ standard and develop any feedback regarding those tests. Manufacturers are invited to bring a vehicle equipped with a mobile LPR system to the U.S. Customs and Border Protection Government Test Lane Facility (GTLF) in Fredericksburg, Virginia. The assessment will take place over two days (see dates above). Manufacturers will be permitted to run through the test setups in an equitable fashion as time permits for the two days depending on the number of respondents to this notice.

Space is limited at the GTLF, and as a result, each manufacturer will only be allowed to bring one test vehicle. Neither NIJ nor IACP will collect any data from any manufacturer from the practical assessment. Manufacturers are encouraged to submit any feedback regarding the test methods as result of the two-day practical assessment during the forthcoming public comment period for the draft NIJ standard tentatively titled Vehicle-mounted License Plate Recognition Systems for Law Enforcement.

Gregory K. Ridgeway,

Acting Director, National Institute of Justice.

[FR Doc. 2014–16211 Filed 7–10–14; 8:45 am]

BILLING CODE 4410–18–P

NATIONAL ARCHIVES AND RECORDS ADMINISTRATION

[NARA–2014–043]

Meeting Notice: State, Local, Tribal, and Private Sector Policy Advisory Committee (SLTPS–PAC)

AGENCY: National Archives and Records Administration.

ACTION: Notice of Meeting of Advisory Committee.

SUMMARY: In accordance with the Federal Advisory Committee Act, as amended (5 U.S.C. appendix 2), the National Archives and Records Administration (NARA) announces a meeting of the State, Local, Tribal, and Private Sector Policy Advisory Committee (SLTP–PAC). The meeting will be held to discuss matters relating to the Classified National Security Information Program for State, Local, Tribal, and Private Sector Entities. The meeting will be open to the public.

DATES: The meeting will be held on July 23, 2014, from 10:00 a.m. to 12:00 noon.

ADDRESSES: National Archives and Records Administration, 700 Pennsylvania Avenue NW., Jefferson Room, Washington, DC 20408.

FOR FURTHER INFORMATION CONTACT: Robert J. Skwirot, Senior Program Analyst, ISOO, National Archives Building, 700 Pennsylvania Avenue NW., Washington, DC 20408, by telephone at (202) 357–5398, or by email at *robert.skwirot@nara.gov.* Contact ISOO at *ISOO@nara.gov.*

SUPPLEMENTARY INFORMATION: This meeting will be open to the public. However, due to space limitations and access procedures, the name and telephone number of individuals planning to attend must be submitted to the Information Security Oversight Office (ISOO) no later than Friday, July 18, 2014. ISOO will provide additional instructions for gaining access to the location of the meeting.

Dated: July 7, 2014.

Patrice Little Murray,

Acting Committee Management Officer.

[FR Doc. 2014–16288 Filed 7–10–14; 8:45 am]

BILLING CODE 7515–01–P

NUCLEAR REGULATORY COMMISSION

[NRC–2014–0163]

Setpoints for Safety-Related Instrumentation

AGENCY: Nuclear Regulatory Commission.

ACTION: Draft regulatory guide, request for comment.

SUMMARY: The U.S. Nuclear Regulatory Commission (NRC) is issuing draft regulatory guide (DG), DG–1141, ''Setpoints for Safety-Related Instruments'' for public comment. This DG is proposed Revision 4 of Regulatory Guide (RG) 1.105, ''Setpoints for Safety-Related Instrumentation.'' This DG describes proposed updates to the recommended practices and criteria for determining instrument setpoints and appropriate setpoint related criteria. This DG describes proposed practices and criteria that the staff of the NRC considers acceptable for demonstrating compliance with NRC requirements for ensuring that setpoints for safety related instruments are initially within, and should remain within, technical specification limits. This DG also proposes practices and criteria for establishing those technical specification limits and ensuring that those limits will adequately support the proper operation of the associated systems.

DATES: Submit comments by September 9, 2014. Comments received after this date will be considered if practical to do so, but the NRC is able to ensure consideration only for comments received on or before this date. Although a time limit is given, comments and suggestions in connection with items for inclusion in guides currently being developed or improvements in all published guides are encouraged at any time.

ADDRESSES: You may submit comments by any of the following methods (unless this document describes a different method for submitting comments on a specific subject):

- *Federal Rulemaking Web site:* Go to *http://www.regulations.gov* and search for Docket ID NRC–2014–0163. Address questions about NRC dockets to Carol Gallagher; telephone: 301–287–3422; email: *Carol.Gallagher@nrc.gov.* For technical questions, contact the individual(s) listed in the **FOR FURTHER INFORMATION CONTACT** section of this document.
- *Mail comments to:* Cindy Bladey, Office of Administration, Mail Stop: 3WFN 06A–A44M, U.S. Nuclear

Regulatory Commission, Washington, DC 20555–0001.

For additional direction on accessing information and submitting comments, see ''Accessing Information and Submitting Comments'' in the **SUPPLEMENTARY INFORMATION** section of this document.

FOR FURTHER INFORMATION CONTACT: Paul J. Rebstock, telephone: 301–251–7488, email: *Paul.Rebstock@nrc.gov* or Mark Orr, telephone: 301–251–7495, email: *Mark.Orr@nrc.gov*. Both of the Office of Nuclear Regulatory Research, U.S. Nuclear Regulatory Commission, Washington, DC 20555–0001.

SUPPLEMENTARY INFORMATION:

I. Obtaining Information and Submitting Comments

A. Obtaining Information.

Please refer to Docket ID NRC–2014–0163 when contacting the NRC about the availability of information regarding this document. You may obtain publicly-available information related to this document by any of the following methods:

- *Federal Rulemaking Web site:* Go to *http://www.regulations.gov* and search for Docket ID NRC–2014–0163. Address questions about NRC dockets to Carol Gallagher; telephone: 301–287–3422; email: *Carol.Gallagher@nrc.gov*. For technical questions, contact the individual(s) listed in the **FOR FURTHER INFORMATION CONTACT** section of this document.
- *NRC's Agencywide Documents Access and Management System (ADAMS):* You may access publicly available documents online in the NRC Library at http://www.nrc.gov/reading-rm/adams.html. To begin the search, select ''ADAMS Public Documents'' and then select ''Begin Web-based ADAMS Search.'' For problems with ADAMS, please contact the NRC's Public Document Room (PDR) reference staff at 1–800–397–4209, 301–415–4737, or by email to pdr.resource@nrc.gov. The draft regulatory guide is available electronically in ADAMS under Accession No. ML14149A361. The regulatory analysis may be found in ADAMS under Accession No. ML101820157.
- *NRC's PDR:* You may examine and purchase copies of public documents at the NRC's PDR, Room O1–F21, One White Flint North, 11555 Rockville Pike, Rockville, Maryland 20852.

B. Submitting Comments

Please include Docket ID NRC–2014–0163 in the subject line of your comment submission, in order to ensure that the NRC is able to make your comment submission available to the public in this docket.

The NRC cautions you not to include identifying or contact information that you do not want to be publicly disclosed in your comment submission. The NRC will post all comment submissions at *http://www.regulations.gov* as well as enters the comment submissions into ADAMS. The NRC does not routinely edit comment submissions to remove identifying or contact information.

If you are requesting or aggregating comments from other persons for submission to the NRC, then you should inform those persons not to include identifying or contact information that they do not want to be publicly disclosed in their comment submission. Your request should state that the NRC will not edit comment submissions to remove such information before making the comment submissions available to the public or entering the comment submissions into ADAMS.

II. Additional Information

The NRC is issuing for public comment a DG in the NRC's ''Regulatory Guide'' series. This series was developed to describe and make available to the public such information as methods that are acceptable to the NRC staff for implementing specific parts of the NRC's regulations, techniques that the staff uses in evaluating specific problems or postulated accidents, and data that the staff needs in its review of applications for permits and licenses.

The DG, entitled, ''Setpoints for Safety-Related Instrumentation'' is temporarily identified by its task number, DG–1141. Draft regulatory guide, DG–1141 is proposed Revision 4 of RG 1.105. The DG describes practices and criteria that the staff of the NRC considers acceptable for compliance with NRC requirements for ensuring that setpoints for safety related instruments are initially within, and should remain within, technical specification limits. This DG also presents practices and criteria for establishing those technical specification limits and ensuring that those limits will adequately support the proper operation of the associated systems—that is, that establishing and maintaining setpoints in accordance with those limits will provide adequate assurance that a plant will operate as described in the plant safety analyses.

This revision continues to address concerns expressed in the previous revision of this regulatory guide. The previous revision addressed problems with setpoint uncertainty allowances and setpoint discrepancies, which had led to a number of operational problems. This DG also addressed significant variability that had been observed in licensees' surveillance interval evaluations with regard to drift, setpoint methodology, and completeness. This DG enumerates a number of specific concerns in this area, observing that the listed concerns were resolved during the development of the 1994 version of ANSI/ISA–S67.04, Part 1–1994, ''Setpoints for Nuclear Safety-Related Instrumentation.''

Copies of American National Standards Institute (ANSI)/International Society of Automation (ISA) Standard ANSI/ISA–S67.04, Part 1–1994 may be obtained through the ISA Web site at *www.isa.org* or by writing to the International Society of Automation, 67 T.W. Alexander Dr., P.O. Box 12277, Research Triangle Park, NC 27709, by email at *info@isa.org*, telephone: 919–549–8411, or fax at 919–549–8288

III. Backfitting and Issue Finality

This DG, if finalized, would not constitute backfitting as defined in 10 CFR 50.109 (the Backfit Rule) and would not otherwise be inconsistent with the issue finality provisions in 10 CFR part 52. As discussed in the ''Implementation'' section of this DG, the NRC has no current intention to impose this DG on holders of current operating licenses or combined licenses.

This DG, if finalized, may be applied to applications for operating licenses and combined licenses docketed by the NRC as of the date of issuance of the final RG, as well as future applications for operating licenses and combined licenses submitted after the issuance of the RG. Such action does not constitute backfitting as defined in 10 CFR 50.109(a)(1) or is otherwise inconsistent with the applicable issue finality provision in 10 CFR part 52, inasmuch as such applicants or potential applicants, with exceptions not applicable here, are not within the scope of entities protected by the Backfit Rule or the relevant issue finality provisions in 10 CFR part 52.

Dated at Rockville, Maryland, this 3rd day of July, 2014.

For the Nuclear Regulatory Commission.

Harriet Karagiannis,

Acting Chief, Regulatory Guidance and Generic Issues Branch, Division of Engineering, Office of Nuclear Regulatory Research.

[FR Doc. 2014–16165 Filed 7–10–14; 8:45 am]

BILLING CODE 7590–01–P

NUCLEAR REGULATORY COMMISSION

[Docket No. 40–6563; NRC–2014–0164]

License Amendment Application; Mallinckrodt LLC

AGENCY: Nuclear Regulatory Commission.

ACTION: License amendment application; opportunity to request a hearing and to petition for leave to intervene.

SUMMARY: The U.S. Nuclear Regulatory Commission (NRC) has received an application from Mallinckrodt LLC (licensee) to amend NRC Source Materials License No. STB–401 to reduce the amount of its financial assurance for the remaining Columbium-Tantalum (C–T) decommissioning project activities occurring at the Mallinckrodt site in Hazelwood, Missouri from $21,113,000 dollars to $5,660,337.

DATES: A request for a hearing or petition for leave to intervene must be filed by September 9, 2014.

ADDRESSES: Please refer to Docket ID NRC–2014–0164 when contacting the NRC about the availability of information regarding this document. You may obtain publicly-available information related to this document using any of the following methods.

- Federal Rulemaking Web site: Go to *http://www.regulations.gov* and search for Docket ID NRC–2014–0164. Address questions about NRC dockets to Carol Gallagher; telephone: 301–287–3422; email: *Carol.Gallagher@nrc.gov.* For technical questions, contact the individual listed in the **FOR FURTHER INFORMATION CONTACT** section of this document.
- NRC's Agencywide Documents Access and Management System (ADAMS): You may obtain publicly available documents online in the ADAMS Public Documents collection at *http://www.nrc.gov/reading-rm/adams.html.* To begin the search, select ''ADAMS Public Documents'' and then select ''Begin Web-based ADAMS Search.'' For problems with ADAMS, please contact the NRC's Public Document Room (PDR) reference staff at 1–800–397–4209, 301–415–4737, or by email to *pdr.resource@nrc.gov.* The ADAMS accession number for each document referenced in this document (if that document is available in ADAMS) is provided the first time that a document is referenced. The license amendment application is available under ADAMS Accession No. ML14120A311.
- NRC's PDR: You may examine and purchase copies of public documents at the NRC's PDR, Room O1–F21, One White Flint North, 11555 Rockville Pike, Rockville, Maryland 20852.

FOR FURTHER INFORMATION CONTACT: Yolande Norman, Office of Federal and State Materials and Environmental Management Programs, U.S. Nuclear Regulatory Commission, Washington, DC 20555–0001, telephone: 301–415–7741; email: *Yolande.Norman@nrc.gov.*

SUPPLEMENTARY INFORMATION:

I. Introduction

The NRC has received, by letter dated April 22, 2014, an application to amend Source Materials License No. STB–401, for the Columbium-Tantalum (C–T) decommissioning project at the Mallinckrodt site located in Hazelwood, Missouri (ADAMS Accession No. ML14120A311). Specifically, the licensee, Mallinckrodt LLC (Mallinckrodt), requests NRC approval to reduce its current financial assurance from $21,113,000 dollars to $5,660,337 and revise its Letter of Credit and Standby Trust Agreement that was originally established to cover both the Phase I and II Decommissioning Plans under License Conditions 18 and 20 (ADAMS Accession Nos. ML083150652, ML101620140). According to Mallinckrodt, the existing financial assurance is nearly four times greater than the current estimates for the outstanding decommissioning activities that need to be completed for the C–T decommissioning project.

The ultimate goal of the C–T decommissioning project is to remediate the radiological constituents associated with C–T production remaining at the site to the extent necessary to terminate license STB–401. Mallinckrodt elected to decommission the C–T project areas of the site in two phases. In Phase I, Mallinckrodt decommissioned the buildings and equipment to meet the NRC's unrestricted use release criteria stated in § 20.1402 of Title 10 of the *Code of Federal Regulations* (10 CFR). Phase I of the decommissioning project was completed in February 2007 (ADAMS Accession No. ML070530675). Phase II of the decommissioning project included the remediation of the building slabs and foundations, paved surfaces, and all subsurface material. Before the license can be terminated, NRC must determine, among other things, that the areas of the Mallinckrodt facility associated with the C–T project meets the NRC's unrestricted release criteria.

Mallinckrodt contends that the only outstanding work remaining is the NRC's review and approval of the Draft Final Status Survey Reports for the Phase II remedial field work that has been completed. Mallinckrodt's revised estimate includes contractor and consulting fees for the preparation of the Final Status Survey reports and final approval by the NRC, as well as, oversight costs and contingency fees as prescribed by the NRC's regulatory guidance document, NUREG–1757, Vol. 3, Rev. 1, ''Consolidated Decommissioning Guidance: Financial Assurance, Recordkeeping, and Timeliness '' (ADAMS Accession No. ML12048A683).

II. Opportunity To Request a Hearing and Petition for Leave T o Intervene

Within 60 days after the date of publication of this notice, any person(s) whose interest may be affected by this action may file a request for a hearing and a petition to intervene with respect to issuance of the amendment to the subject facility operating license or combined license. Requests for a hearing and a petition for leave to intervene shall be filed in accordance with the Commission's ''Agency Rules of Practice and Procedure'' in 10 CFR Part 2. Interested person(s) should consult a current copy of 10 CFR 2.309, which is available at the NRC's PDR, located in One White Flint North, Room O1–F21 (first floor), 11555 Rockville Pike, Rockville, Maryland 20852. The NRC's regulations are accessible electronically from the NRC Library on the NRC's Web site at *http://www.nrc.gov/reading-rm/doc-collections/cfr/.* If a request for a hearing or petition for leave to intervene is filed within 60 days, the Commission or a presiding officer designated by the Commission or by the Chief Administrative Judge of the Atomic Safety and Licensing Board Panel will rule on the request and/or petition. The Secretary or the Chief Administrative Judge of the Atomic Safety and Licensing Board will issue a notice of hearing or an appropriate order.

As required by 10 CFR 2.309, a petition for leave to intervene shall set forth, with particularity, the interest of the petitioner in the proceeding and how that interest may be affected by the results of the proceeding. The petition should specifically explain the reasons why intervention should be permitted, with particular reference to the following general requirements: (1) The name, address, and telephone number of the requestor or petitioner; (2) the nature of the requestor's/petitioner's right under the Act to be made a party to the proceeding; (3) the nature and extent of the requestor's/petitioner's property, financial, or other interest in the proceeding; and (4) the possible

effect of any decision or order which may be entered in the proceeding on the requestor's/petitioner's interest. The petition must also set forth the specific contentions which the requestor/petitioner seeks to have litigated at the proceeding.

Each contention must consist of a specific statement of the issue of law or fact to be raised or controverted. In addition, the requestor/petitioner shall provide a brief explanation of the bases for the contention and a concise statement of the alleged facts or expert opinion that support the contention and on which the requestor/petitioner intends to rely in proving the contention at the hearing. The requestor/petitioner must also provide references to those specific sources and documents of which the petitioner is aware and on which the requestor/petitioner intends to rely to establish those facts or expert opinion. The petition must include sufficient information to show that a genuine dispute exists with the applicant on a material issue of law or fact. Contentions shall be limited to matters within the scope of the amendment under consideration. The contention must be one which, if proven, would entitle the requestor/petitioner to relief. A requestor/petitioner who fails to satisfy these requirements with respect to at least one contention will not be permitted to participate as a party.

Those permitted to intervene become parties to the proceeding, subject to any limitations in the order granting leave to intervene, and have the opportunity to participate fully in the conduct of the hearing with respect to resolution of that person's admitted contentions, including the opportunity to present evidence and to submit a cross-examination plan for cross-examination of witnesses, consistent with NRC regulations, policies, and procedures. The Atomic Safety and Licensing Board will set the time and place for any prehearing conferences and evidentiary hearings, and the appropriate notices will be provided.

Petitions for leave to intervene must be filed no later than 60 days from the date of publication of this notice. Requests for hearing, petitions for leave to intervene, and motions for leave to file new or amended contentions that are filed after the 60-day deadline will not be entertained absent a determination by the presiding officer that the filing demonstrates good cause by satisfying the three factors in 10 CFR 2.309(c)(1)(i)–(iii).

A State, local governmental body, Federally-recognized Indian tribe, or agency thereof, may submit a petition to the Commission to participate as a party under 10 CFR 2.309(h)(1). The petition should state the nature and extent of the petitioner's interest in the proceeding. The petition should be submitted to the Commission by September 9, 2014. The petition must be filed in accordance with the filing instructions in the ''Electronic Submissions (E-Filing)'' section of this document, and should meet the requirements for petitions for leave to intervene set forth in this section, except that under § 2.309(h)(2) a State, local governmental body, or Federally-recognized Indian tribe, or agency thereof does not need to address the standing requirements in 10 CFR 2.309(d) if the facility is located within its boundaries. A State, local governmental body, Federally-recognized Indian tribe, or agency thereof may also have the opportunity to participate under 10 CFR 2.315(c).

If a hearing is granted, any person who does not wish, or is not qualified, to become a party to the proceeding may, in the discretion of the presiding officer, be permitted to make a limited appearance pursuant to the provisions of 10 CFR 2.315(a). A person making a limited appearance may make an oral or written statement of position on the issues, but may not otherwise participate in the proceeding. A limited appearance may be made at any session of the hearing or at any prehearing conference, subject to the limits and conditions as may be imposed by the presiding officer. Persons desiring to make a limited appearance are requested to inform the Secretary of the Commission by September 9, 2014.

III. Electronic Submissions (E-Filing)

All documents filed in NRC adjudicatory proceedings, including a request for hearing, a petition for leave to intervene, any motion or other document filed in the proceeding prior to the submission of a request for hearing or petition to intervene, and documents filed by interested governmental entities participating under 10 CFR 2.315(c), must be filed in accordance with the NRC E-Filing rule (72 FR 49139; August 28, 2007). The E-Filing process requires participants to submit and serve all adjudicatory documents over the internet, or in some cases to mail copies on electronic storage media. Participants may not submit paper copies of their filings unless they seek an exemption in accordance with the procedures described below.

To comply with the procedural requirements of E-Filing, at least 10 days prior to the filing deadline, the participant should contact the Office of the Secretary by email at *hearing.docket@nrc.gov,* or by telephone at 301–415–1677, to request (1) a digital identification (ID) certificate, which allows the participant (or its counsel or representative) to digitally sign documents and access the E-Submittal server for any proceeding in which it is participating; and (2) advise the Secretary that the participant will be submitting a request or petition for hearing (even in instances in which the participant, or its counselor representative, already holds an NRC-issued digital ID certificate). Based upon this information, the Secretary will establish an electronic docket for the hearing in this proceeding if the Secretary has not already established an electronic docket.

Information about applying for a digital ID certificate is available on the NRC's public Web site at *http://www.nrc.gov/site-help/e-submittals/getting-started.html.* System requirements for accessing the E-Submittal server are detailed in the NRC's ''Guidance for Electronic Submission,'' which is available on the agency's public Web site at *http://www.nrc.gov/site-help/e-submittals.html.* Participants may attempt to use other software not listed on the Web site, but should note that the NRC's E-Filing system does not support unlisted software, and the NRC Meta System Help Desk will not be able to offer assistance in using unlisted software.

If a participant is electronically submitting a document to the NRC in accordance with the E-Filing rule, the participant must file the document using the NRC's online, Web-based submission form. In order to serve documents through the Electronic Information Exchange System, users will be required to install a Web browser plug-in from the NRC's Web site. Further information on the Web-based submission form, including the installation of the Web browser plug-in, is available on the NRC's public Web site at *http://www.nrc.gov/site-help/e-submittals.html.*

Once a participant has obtained a digital ID certificate and a docket has been created, the participant can then submit a request for hearing or petition for leave to intervene. Submissions should be in Portable Document Format (PDF) in accordance with NRC guidance available on the NRC's public Web site at *http://www.nrc.gov/site-help/e-submittals.html.* A filing is considered complete at the time the documents are submitted through the NRC's E-Filing system. To be timely, an electronic filing must be submitted to the E-Filing

system no later than 11:59 p.m. Eastern Time on the due date. Upon receipt of a transmission, the E-Filing system time-stamps the document and sends the submitter an email notice confirming receipt of the document. The E-Filing system also distributes an email notice that provides access to the document to the NRC's Office of the General Counsel and any others who have advised the Office of the Secretary that they wish to participate in the proceeding, so that the filer need not serve the documents on those participants separately. Therefore, applicants and other participants (or their counsel or representative) must apply for and receive a digital ID certificate before a hearing request/petition to intervene is filed so that they can obtain access to the document via the E-Filing system.

A person filing electronically using the NRC's adjudicatory E-Filing system may seek assistance by contacting the NRC Meta System Help Desk through the ''Contact Us'' link located on the NRC's public Web site at *http://www.nrc.gov/site-help/e-submittals.html,* by email to *MSHD.Resource@nrc.gov,* or by a toll-free call at 1–866–672–7640. The NRC Meta System Help Desk is available between 8 a.m. and 8 p.m., Eastern Time, Monday through Friday, excluding government holidays.

Participants who believe that they have a good cause for not submitting documents electronically must file an exemption request, in accordance with 10 CFR 2.302(g), with their initial paper filing requesting authorization to continue to submit documents in paper format. Such filings must be submitted by: (1) First class mail addressed to the Office of the Secretary of the Commission, U.S. Nuclear Regulatory Commission, Washington, DC 20555–0001, Attention: Rulemaking and Adjudications Staff; or (2) courier, express mail, or expedited delivery service to the Office of the Secretary, Sixteenth Floor, One White Flint North, 11555 Rockville Pike, Rockville, Maryland 20852, Attention: Rulemaking and Adjudications Staff. Participants filing a document in this manner are responsible for serving the document on all other participants. Filing is considered complete by first-class mail as of the time of deposit in the mail, or by courier, express mail, or expedited delivery service upon depositing the document with the provider of the service. A presiding officer, having granted an exemption request from using E-Filing, may require a participant or party to use E-Filing if the presiding officer subsequently determines that the reason for granting the exemption from use of E-Filing no longer exists.

Documents submitted in adjudicatory proceedings will appear in the NRC's electronic hearing docket which is available to the public at *http://ehd1.nrc.gov/ehd/,* unless excluded pursuant to an order of the Commission, or the presiding officer. Participants are requested not to include personal privacy information, such as social security numbers, home addresses, or home phone numbers in their filings, unless an NRC regulation or other law requires submission of such information. However, a request to intervene will require including information on local residence in order to demonstrate a proximity assertion of interest in the proceeding. With respect to copyrighted works, except for limited excerpts that serve the purpose of the adjudicatory filings and would constitute a Fair Use application, participants are requested not to include copyrighted materials in their submission.

Dated at Rockville, Maryland this 1st day of July 2014.

For the Nuclear Regulatory Commission.

Lydia Chang,

Acting Deputy Director, Decommissioning and Uranium Recovery Licensing Directorate, Division of Waste Management and Environmental Protection, Office of Federal and State Materials and Environmental Management Programs.

[FR Doc. 2014–16278 Filed 7–10–14; 8:45 am]

BILLING CODE 7590–01–P

NUCLEAR REGULATORY COMMISSION

[NRC–2014–0001]

Sunshine Act Meetings

DATE: Weeks of July 14, 21, 28, August 4, 11, 18, 2014.

PLACE: Commissioners' Conference Room, 11555 Rockville Pike, Rockville, Maryland.

STATUS: Public and Closed.

Week of July 14, 2014

Tuesday, July 15, 2014

9:00 a.m. Briefing on Nuclear Power Plant Decommissioning (Public Meeting) (Contact: Louise Lund, 301–415–3248)

This meeting will be webcast live at the Web address—*http://www.nrc.gov/.*

Thursday, July 17, 2014

9:00 a.m. Briefing on Radiation Source Protection and Security (Part 1) (Public Meeting) (Contact: Kim Lukes, 301–415–6701)

This meeting will be webcast live at the Web address—*http://www.nrc.gov/.*

10:35 a.m. Briefing on Radiation Source Protection and Security (Part 2)
(Closed—Ex. 9)
(Contact: Kim Lukes, 301–415–6701)

Week of July 21, 2014—Tentative

There are no meetings scheduled for the week of July 21, 2014.

Week of July 28, 2014—Tentative

Tuesday, July 29, 2014

9:30 a.m. Briefing on Human Capital and Equal Employment Opportunity (EEO) (Public Meeting) (Contact: Kristin Davis, 301–287–0707)

This meeting will be webcast live at the Web address—*http://www.nrc.gov/.*

Thursday, July 31, 2014

9:00 a.m. Briefing on the Status of Lessons Learned from the Fukushima Dai-ichi Accident (Public Meeting) (Contact: Kevin Witt, 301–415–2145)

This meeting will be webcast live at the Web address—*http://www.nrc.gov/.*

Week of August 4, 2014—Tentative

There are no meetings scheduled for the week of August 4, 2014.

Week of August 11, 2014—Tentative

There are no meetings scheduled for the week of August 11, 2014.

Week of August 18, 2014—Tentative

There are no meetings scheduled for the week of August 18, 2014.

* * * * *

The schedule for Commission meetings is subject to change on short notice. To verify the status of meetings, call Rochelle Bavol, 301–415–1651.

* * * * *

The NRC Commission Meeting Schedule can be found on the Internet at: *http://www.nrc.gov/public-involve/public-meetings/schedule.html.*

* * * * *

The NRC provides reasonable accommodation to individuals with disabilities where appropriate. If you need a reasonable accommodation to participate in these public meetings, or need this meeting notice or the transcript or other information from the public meetings in another format (e.g. braille, large print), please notify Kimberly Meyer, NRC Disability Program Manager, at 301–287–0727, or by email at *Kimberly.Meyer-Chambers@nrc.gov.* Determinations on requests for

reasonable accommodation will be made on a case-by-case basis.

* * * * *

Members of the public may request to receive this information electronically. If you would like to be added to the distribution, please contact the Office of the Secretary, Washington, DC 20555 (301–415–1969), or send an email to *Darlene.Wright@nrc.gov*.

Dated: July 8, 2014.

Rochelle C. Bavol,

Policy Coordinator, Office of the Secretary.

[FR Doc. 2014–16440 Filed 7–9–14; 4:15 pm]

BILLING CODE 7590–01–P

POSTAL REGULATORY COMMISSION

[Docket Nos. MC2014–31 and CP2014–56; Order No. 2115]

New Postal Product

AGENCY: Postal Regulatory Commission.

ACTION: Notice.

SUMMARY: The Commission is noticing a recent Postal Service filing concerning an addition of Priority Mail Contract 83 to the competitive product list. This notice informs the public of the filing, invites public comment, and takes other administrative steps.

DATES: *Comments are due:* July 15, 2014.

ADDRESSES: Submit comments electronically via the Commission's Filing Online system at *http://www.prc.gov.* Those who cannot submit comments electronically should contact the person identified in the **FOR FURTHER INFORMATION CONTACT** section by telephone for advice on filing alternatives.

FOR FURTHER INFORMATION CONTACT: David A. Trissell, General Counsel, at 202–789–6820.

SUPPLEMENTARY INFORMATION:

Table of Contents

I. Introduction
II. Notice of Commission Action

I. Introduction

In accordance with 39 U.S.C. 3642 and 39 CFR 3020.30 *et seq.,* the Postal Service filed a formal request and associated supporting information to add Priority Mail Contract 83 to the competitive product list.[1]

The Postal Service contemporaneously filed a redacted contract related to the proposed new product under 39 U.S.C. 3632(b)(3) and 39 CFR 3015.5. *Id.* Attachment B.

To support its Request, the Postal Service filed a copy of the contract, a copy of the Governors' Decision authorizing the product, proposed changes to the Mail Classification Schedule, a Statement of Supporting Justification, a certification of compliance with 39 U.S.C. 3633(a), and an application for non-public treatment of certain materials. It also filed supporting financial workpapers.

II. Notice of Commission Action

The Commission establishes Docket Nos. MC2014–31 and CP2014–56 to consider the Request pertaining to the proposed Priority Mail Contract 83 product and the related contract, respectively.

The Commission invites comments on whether the Postal Service's filings in the captioned dockets are consistent with the policies of 39 U.S.C. 3632, 3633, or 3642, 39 CFR part 3015, and 39 CFR part 3020, subpart B. Comments are due no later than July 15, 2014. The public portions of these filings can be accessed via the Commission's Web site (*http://www.prc.gov*).

The Commission appoints Lyudmila Y. Bzhilyanskaya to represent the interests of the general public (Public Representative) in this docket.

III. Ordering Paragraphs

It is ordered:

1. The Commission establishes Docket Nos. MC2014–31 and CP2014–56 to consider the matters raised in each docket.

2. Pursuant to 39 U.S.C. 505, Lyudmila Y. Bzhilyanskaya is appointed to serve as an officer of the Commission to represent the interests of the general public in these proceedings (Public Representative).

3. Comments are due no later than July 15, 2014.

4. The Secretary shall arrange for publication of this order in the **Federal Register**.

By the Commission.

Shoshana M. Grove,

Secretary.

[FR Doc. 2014–16221 Filed 7–10–14; 8:45 am]

BILLING CODE 7710–FW–P

[1] Request of the United States Postal Service to Add Priority Mail Contract 83 to Competitive Product List and Notice of Filing (Under Seal) of Unredacted Governors' Decision, Contract, and Supporting Data, July 3, 2014 (Request).

POSTAL REGULATORY COMMISSION

[Docket Nos. MC2014–32 and CP2014–57; Order No. 2116]

New Postal Product

AGENCY: Postal Regulatory Commission.

ACTION: Notice.

SUMMARY: The Commission is noticing a recent Postal Service filing concerning an addition of First-Class Package Service Contract 36 to the competitive product list. This notice informs the public of the filing, invites public comment, and takes other administrative steps.

DATES: *Comments are due:* July 15, 2014.

ADDRESSES: Submit comments electronically via the Commission's Filing Online system at *http://www.prc.gov.* Those who cannot submit comments electronically should contact the person identified in the **FOR FURTHER INFORMATION CONTACT** section by telephone for advice on filing alternatives.

FOR FURTHER INFORMATION CONTACT: David A. Trissell, General Counsel, at 202–789–6820.

SUPPLEMENTARY INFORMATION:

Table of Contents

I. Introduction
II. Notice of Commission Action
III. Ordering Paragraphs

I. Introduction

In accordance with 39 U.S.C. 3642 and 39 CFR 3020.30 *et seq.,* the Postal Service filed a formal request and associated supporting information to add First-Class Package Service Contract 36 to the competitive product list.[1]

The Postal Service contemporaneously filed a redacted contract related to the proposed new product under 39 U.S.C. 3632(b)(3) and 39 CFR 3015.5. *Id.* Attachment B.

To support its Request, the Postal Service filed a copy of the contract, a copy of the Governors' Decision authorizing the product, proposed changes to the Mail Classification Schedule, a Statement of Supporting Justification, a certification of compliance with 39 U.S.C. 3633(a), and an application for non-public treatment of certain materials. It also filed supporting financial workpapers.

II. Notice of Commission Action

The Commission establishes Docket Nos. MC2014–32 and CP2014–57 to consider the Request pertaining to the proposed First-Class Package Service Contract 36 product and the related contract, respectively.

[1] Request of the United States Postal Service to Add First-Class Package Service Contract 36 to Competitive Product List and Notice of Filing (Under Seal) of Unredacted Governors' Decision, Contract, and Supporting Data, July 3, 2014 (Request).

The Commission invites comments on whether the Postal Service's filings in the captioned dockets are consistent with the policies of 39 U.S.C. 3632, 3633, or 3642, 39 CFR part 3015, and 39 CFR part 3020, subpart B. Comments are due no later than July 15, 2014. The public portions of these filings can be accessed via the Commission's Web site (*http://www.prc.gov*).

The Commission appoints James F. Callow to represent the interests of the general public (Public Representative) in this docket.

III. Ordering Paragraphs

It is ordered:

1. The Commission establishes Docket Nos. MC2014–32 and CP2014–57 to consider the matters raised in each docket.

2. Pursuant to 39 U.S.C. 505, James F. Callow is appointed to serve as an officer of the Commission to represent the interests of the general public in these proceedings (Public Representative).

3. Comments are due no later than July 15, 2014.

4. The Secretary shall arrange for publication of this order in the **Federal Register**.

By the Commission.

Shoshana M. Grove,

Secretary.

[FR Doc. 2014–16220 Filed 7–10–14; 8:45 am]

BILLING CODE 7710–FW–P

POSTAL REGULATORY COMMISSION

[Docket No. CP2014–9; Order No. 2114]

Amendment to Postal Product

AGENCY: Postal Regulatory Commission.

ACTION: Notice.

SUMMARY: The Commission is noticing a recent Postal Service filing concerning an amendment to Priority Mail Contract 70. This notice informs the public of the filing, invites public comment, and takes other administrative steps.

DATES: *Comments are due:* July 14, 2014.

ADDRESSES: Submit comments electronically via the Commission's Filing Online system at *http://www.prc.gov.* Those who cannot submit comments electronically should contact the person identified in the **FOR FURTHER INFORMATION CONTACT** section by telephone for advice on filing alternatives.

FOR FURTHER INFORMATION CONTACT: David A. Trissell, General Counsel, at 202–789–6820.

SUPPLEMENTARY INFORMATION:

Table of Contents

I. Introduction
II. Notice of Filing
III. Ordering Paragraphs

I. Introduction

On July 3, 2014, the Postal Service filed notice that it has agreed to an Amendment to the existing Priority Mail Contract 70 negotiated service agreement approved in this docket.[1] In support of its Notice, the Postal Service includes a redacted copy of the Amendment. Notice at 1.

The Postal Service also filed the unredacted Amendment under seal. *Id.* The Postal Service seeks to incorporate by reference the Application for Non-Public Treatment originally filed in this docket for the protection of information that it has filed under seal. *Id.*

The Amendment concerns the packages to which the contract applies and the locations from which the packages must originate. *Id.,* Attachment A at 1.

The Postal Service intends for the Amendment to become effective one business day after the date that the Commission completes its review of the Notice. Notice at 1. The Postal Service asserts that the Amendment will not impair the ability of the contract to comply with 39 U.S.C. 3633. *Id.*

II. Notice of Filing

The Commission invites comments on whether the changes presented in the Postal Service's Notice are consistent with the policies of 39 U.S.C. 3632, 3633, or 3642, 39 CFR 3015.5, and 39 CFR part 3020, subpart B. Comments are due no later than July 14, 2014. The public portions of these filings can be accessed via the Commission's Web site (*http://www.prc.gov*).

The Commission appoints Kenneth R. Moeller to represent the interests of the general public (Public Representative) in this docket.

III. Ordering Paragraphs

It is ordered:

1. The Commission reopens Docket No. CP2014–9 for consideration of matters raised by the Postal Service's Notice.

2. Pursuant to 39 U.S.C. 505, the Commission appoints Kenneth R. Moeller to serve as an officer of the Commission (Public Representative) to represent the interests of the general public in this proceeding.

3. Comments are due no later than July 14, 2014.

4. The Secretary shall arrange for publication of this order in the **Federal Register**.

By the Commission.

Shoshana M. Grove,

Secretary.

[FR Doc. 2014–16175 Filed 7–10–14; 8:45 am]

BILLING CODE 7710–FW–P

[1] Notice of United States Postal Service of Amendment to Priority Mail Contract 70, July 3, 2014 (Notice).

SECURITIES AND EXCHANGE COMMISSION

[Release No. 34–72547; File No. SR–NYSEMKT–2014–56]

Self-Regulatory Organizations; NYSE MKT LLC; Notice of Filing of Proposed Rule Change Amending Rule 13—Equities To Make the Add Liquidity Only Modifier Available for Additional Limit Orders and Make the Day Time-In-Force Condition Available for Intermarket Sweep Orders

July 7, 2014.

Pursuant to Section 19(b)(1)[1] of the Securities Exchange Act of 1934 (''Act'')[2] and Rule 19b–4 thereunder,[3] notice is hereby given that on June 27, 2014, NYSE MKT LLC (''Exchange'' or ''NYSE MKT'') filed with the Securities and Exchange Commission (''Commission'') the proposed rule change as described in Items I and II below, which Items have been prepared by the self-regulatory organization. The Commission is publishing this notice to solicit comments on the proposed rule change from interested persons.

I. Self-Regulatory Organization's Statement of the Terms of Substance of the Proposed Rule Change

The Exchange proposes to amend Rule 13—Equities to make the Add Liquidity Only (''ALO'') modifier available for additional limit orders and make the day time-in-force condition available for Intermarket Sweep Orders (''ISO''). The text of the proposed rule change is available on the Exchange's Web site at *www.nyse.com*, at the principal office of the Exchange, and at the Commission's Public Reference Room.

II. Self-Regulatory Organization's Statement of the Purpose of, and Statutory Basis for, the Proposed Rule Change

In its filing with the Commission, the self-regulatory organization included

[1] 15 U.S.C. 78s(b)(1).

[2] 15 U.S.C. 78a.

[3] 17 CFR 240.19b–4.

statements concerning the purpose of, and basis for, the proposed rule change and discussed any comments it received on the proposed rule change. The text of those statements may be examined at the places specified in Item IV below. The Exchange has prepared summaries, set forth in sections A, B and C below, of the most significant parts of such statements.

(A) Self-Regulatory Organization's Statement of the Purpose of, and the Statutory Basis for, the Proposed Rule Change

1. Purpose

The Exchange is proposing to amend Rule 13—Equities (''Rule 13'') to make the ALO modifier available for additional limit orders and make the day time-in-force condition available for ISOs.

ALO Modifier

The Exchange currently offers an ALO modifier for MPL Orders, which are undisplayed limit orders that execute at the mid-point of the protected best bid or offer (''PBBO'').[4] Pursuant to paragraph (e) governing MPL Orders in Rule 13, an MPL–ALO Order will not execute upon arrival, even if marketable. The Exchange proposes to amend Rule 13 to make the ALO modifier available for day limit orders. The Exchange notes that all other equity exchanges already make available add-liquidity-only functionality for limit orders.[5]

To effect this change, the Exchange proposes to adopt a definition of ALO Modifier in Rule 13. Proposed paragraph (a) of this new definition would describe how an ALO Modifier impacts an order to which it is appended, which is the same functionality as the ALO modifier currently available for MPL Orders. Specifically, an order designated ALO does not route and will not remove liquidity from the Exchange's book. Proposed paragraph (a) of the new definition would also state that ALO modifiers are available for MPL Orders, as they are today, and for day limit orders.[6] Because the behavior of MPL–ALO Orders is currently described in paragraph (e) for MPL Orders in Rule 13, the Exchange further proposes to cross-reference that rule text in the new definition for ALO Modifiers. Accordingly, the remainder of the proposed definition for ALO Modifier would describe the behavior of limit orders designated ALO.

The Exchange further proposes in new paragraph (a) of the new definition that limit orders designated ALO would be eligible to participate in the open or close, which would include Limit on Open or Limit on Close Orders, but that the ALO designation would be ignored. The Exchange's opening and closing transactions are single-priced auction transactions and the Exchange does not consider either side of the transaction to be either a ''provider'' or a ''taker.'' Accordingly, an ALO modifier is moot for the open or close. In order to enable as much interest as possible to participate in the open or close, the Exchange proposes to include any limit orders designated ALO in these auctions, but to ignore the ALO designation.

To promote the display of liquidity, the Exchange further proposes that a limit order designated ALO must be entered with a minimum of one displayable round lot. Accordingly, the ALO Modifier would be available for Minimum Display Reserve Orders (Rule 13) and Minimum Display Reserve e-Quotes (Rule 70(f)(1)—Equities). The Exchange would reject incoming limit orders designated ALO that do not meet the minimum display requirement, including odd-lot sized orders designated ALO.

The Exchange proposes to specify in paragraph (c) to the new rule text that the following interest may not be designated ALO: (1) DMM interest entered via the Capital Commitment Schedule pursuant to Rule 1000—Equities; (2) d-Quotes, as defined in Rule 70.25—Equities; (3) Sell ''Plus''—Buy ''Minus'' Orders as defined in Rule 13; (4) Non-Display Reserve Orders, as defined in Rule 13, or Non-Display Reserve e-Quotes, as defined in Rule 70(f)(ii)—Equities; or (5) Retail Orders or Retail Price Improvement Orders, as defined in Rule 107C—Equities.

To assure that a limit order designated ALO meets its goal to be available on the Exchange's book to add liquidity to arriving orders, the Exchange proposes to re-price a limit order designated ALO that upon arrival would be marketable against Exchange interest or would lock or cross a protected quotation in violation of Rule 610(d) of Regulation NMS.[7] Accordingly, the Exchange proposes to specify in paragraph (b) to the rule text for ALO Modifiers that if, at the time of entry, a limit order designated ALO is marketable against Exchange interest or would lock or cross a protected quotation in violation of Rule 610(d) of Regulation NMS, the order would be re-priced and displayed one minimum price variation, as defined in supplementary material to Rule 62—Equities, below the best-priced sell interest (for bids) or above the best-priced buy interest (for offers). The Exchange notes that re-pricing a limit order designated ALO so that it would not execute against resting Exchange interest or lock or cross a protected quotation is consistent with how other equities markets currently operate.[8]

The Exchange proposes to use the term ''Exchange interest'' in the proposed rule text in order to include both displayed interest and non-displayed interest (i.e., Non-Displayed Reserve Orders or odd-lot sized orders), which may be priced better than the displayed quote. In addition, the Exchange proposes to add new Supplementary Material .10 to Rule 13 to define new terms to capture the best price among Exchange displayed and non-displayed interest and the best away protected quote. As proposed, the term ''best-priced sell interest'' would refer to the lowest-priced sell interest against which incoming buy interest would be required to execute with and/or route to, including Exchange displayed offers, Non-Display Reserve Orders, Non-Display Reserve e-Quotes, odd-lot sized sell interest, and protected offers on away markets, but would not include non-displayed interest that is priced based on the PBBO, such as MPL Orders or Retail Price Improvement Orders (''RPI''). The term ''best-priced buy interest'' would refer to the highest-priced buy interest against which incoming sell interest would be required to execute with and/or route to, including Exchange displayed bids, Non-Display Reserve Orders, Non-

[4] *See* Rule 13 (Mid-Point Passive Liquidity (MPL) Order).

[5] *See* BATS Exchange, Inc. (''BATS'') Rule 11.9(c)(6) (''BATS Post Only Order''); BATS Y-Exchange, Inc. (''BATS–Y'') Rule 11.9(c)(6) (''BATS Post Only Order''); Chicago Stock Exchange, Inc. (''CHX'') Article 20, Rule 4(b)(18) (''Post Only''); EDGA Exchange, Inc. (''EDGA'') Rule 11.5(c)(5) (''Post Only Order''); EDGX Exchange, Inc. (''EDGX'') Rule 11.5(c)(5) (''Post Only Order''); NASDAQ Stock Market LLC (''Nasdaq'') Rule 4751(f)(10) (''Post-Only Orders''); NASDAQ OMX BX LLC (''Nasdaq OMX BX'') Rule 4751(f)(10) (''Post-Only Orders''); NASDAQ OMX PHLX LLC (''Nasdaq OMX PSX'') Rule 3301(f)(11) (''Post-Only Orders''); and NYSE Arca Equities, Inc. (''NYSE Arca Equities'') Rule 7.31(nn).

[6] Pursuant to Rule 13, a ''Limit, Limited Order, or Limited Price Order'' means an order to buy or sell a stated amount of a security at a specified price, or at a better price, if obtainable and a ''Day Order'' means an order to buy or sell which, if not executed, expires at the end of the 9:30 a.m. to 4:00 p.m. trading session on the day on which it was entered.

[7] 17 CFR 242.610(d).

[8] *See* BATS Rules 11.9(c)(6) and 11.9(g)(2)(D); BATS–Y Rules 11.9(c)(6) and 11.9(g)(2)(D); CHX Article 20, Rule 4(b)(25 (''CHX Only''); EDGA Rule 11.5(c)(5); EDGX Rule 11.5(c)(5); Nasdaq Rule 4751(f)(10); and NYSE Arca Equities Rule 7.31(mm) (PNP Blind order combined with an ALO order).

Display Reserve e-Quotes, odd-lot sized buy interest, and protected bids on away markets, but would not include non-displayed interest that is priced based on the PBBO, such as MPL Orders or RPIs. The Exchange believes it is appropriate to exclude MPL Orders from the definition of best-priced sell/buy interest because the price at which an MPL Order is eligible to execute changes as the PBBO moves.

As further proposed, if the best-priced sell interest is re-priced higher, an order to buy designated ALO would be re-priced and re-displayed higher, up to its limit price. If the best-priced buy interest is re-priced lower, an order to sell designated ALO would be re-priced and re-displayed lower, down to its limit price. The Exchange believes that re-pricing and re-displaying limit orders designated ALO each time the best-priced sell interest is priced higher (for bids) or the best-priced buy interest is priced lower (for offers) would ensure that the order is displayed at its most aggressive price without requiring the order to either take liquidity or lock or cross a protected quotation.

In addition, as proposed, a limit order designated ALO would not be re-priced if it is displayed at its limit price or if the best-priced sell interest moves down in price (for limit orders to buy designated ALO) or if the best-priced buy interest moves up in price (for limit orders to sell designated ALO). Once an order reaches its limit price, the Exchange would no longer need to re-price it. The Exchange also would not need to re-price a limit order designated ALO if the best-priced sell interest moves down (for bids) or the best-priced buy interest moves up (for offers) because in such scenario, the limit order designated ALO would have been displayed first at that price and the opposite-side bid or offer would be required to execute with or route to the resting limit order designated ALO.

For example, assume the Exchange best bid and offer (''BBO'') in XYZ is 10.05 x 10.11, the PBBO is 10.05 x 10.09, and the Exchange has a non-displayed odd-lot sell order priced at 10.07. In this scenario, the best-priced sell interest, as defined in new supplementary material .10 to Rule 13, would be 10.07. Accordingly, if the Exchange were to receive a limit order to buy designated ALO at 10.12 (''Order A''), the Exchange would re-price and display Order A at $10.06, which is one MPV below the 10.07 best-priced sell interest.

Assume now that the resting odd-lot order to sell on the Exchange is either executed or cancelled, but the Exchange best offer and PBO does not change. Because the new best-priced sell interest is the away-market PBO of 10.09, Order A would re-price and re-display to 10.08, which is one MPV below the updated best-priced sell interest.

Assume further that the market updates so that both the Exchange's BBO and the PBBO update to 10.08–10.14 and there is no undisplayed interest to sell at the Exchange. Order A would be re-priced and re-displayed at its limit price of 10.12. At this point, because it has been displayed at its limit price, Order A would not be subject to any further re-pricing. If the Exchange were to receive incoming sell interest marketable against Order A, Order A would be available liquidity to execute against that incoming sell interest.

As further proposed, a limit order designated ALO would receive a new time stamp each time it is re-priced and re-displayed. The Exchange believes that providing a new time stamp each time a limit order designated ALO is re-priced and re-displayed is consistent with current Exchange rules that provide that an order that is modified to change the price of the order shall receive a new time stamp.[9]

As noted above, limit orders designated ALO would not be priced based on resting opposite-side MPL Orders, which are triggered to trade at the midpoint of the PBBO by arriving interest. To assure that limit orders designated ALO would not trigger an opposite-side MPL Order to trade, the Exchange proposes to add new paragraph (d) governing ALO Modifiers in Rule 13 to specify that a limit order designated ALO would not trigger a contra-side MPL Order to trade. The Exchange proposes to make a conforming change to paragraph (a) governing MPL Orders in Rule 13 to specify that an incoming limit order designated ALO would not interact with an MPL Order.

For example, assume the Exchange BBO and PBBO in XYZ is 10.05–10.09 and there is a sell MPL Order eligible to execute at the midpoint of the PBBO, which would be 10.07. Assume further that the Exchange also has a Non-Display Reserve Order to sell priced at 10.08. In this scenario, an incoming buy order designated ALO priced at 10.11 (''Order B'') would re-price and display one MPV below the best-priced sell interest, which is 10.08. Accordingly, Order B would display at 10.07. Although the new 10.07 bid is at the same price that the resting MPL Order could have executed when the PBBO was 10.05 x 10.09, because the new bid updates the PBBO to 10.07 x 10.09, the MPL Order is now eligible to execute at 10.08 and no longer at 10.07.

Because pegging interest may be designated ALO, the Exchange proposes to amend the rules governing pegging interest in Rule 13 to take into consideration how an ALO Modifier would function with pegging interest. As proposed in paragraph (c) governing pegging interest in Rule 13, pegging interest to buy (sell) that is designated ALO would not peg to a price that would result in its executing before displaying and shall instead peg one minimum price variation below (above) the undisplayed Exchange sell (buy) interest against which it would have otherwise executed. For example, assume the Exchange BBO is 10.05 x 10.10 and the PBBO is 10.08 x 10.10 and the Exchange has sell odd-lot interest priced at 10.08. Assume further incoming pegging interest to buy designated ALO with a limit of 10.10 arrives (''Order C''). If Order C were not designated ALO, it would peg to the PBB of 10.08 and execute against the resting odd-lot interest, and any remainder would be displayed at 10.08. As proposed, with the ALO designation, to assure that Order C would not execute on arrival, it would peg to a price one MPV below the 10.08 odd-lot sell interest and display at 10.07.

Day Time-in-Force Designation for ISOs

An ISO is currently defined in Rule 13 as a limit order designated for automatic execution that meets the following requirements: (i) it is identified as an ISO in the manner prescribed by the Exchange; and (ii) simultaneously with the routing of an ISO to the Exchange, one or more additional limit orders, as necessary, are routed to execute against the full displayed size of any protected bid, in the case of a limit order to sell, or the full displayed size of any protected offer, in the case of a limit order to buy and these additional orders are identified as ISOs. This definition is based on the definition of an ISO set forth in Regulation NMS Rule 600(b)(30),[10] and is consistent with similar provisions on other exchanges.[11]

Currently, the Exchange immediately and automatically executes an ISO upon arrival and the portion not so executed will be immediately and automatically

[9] *See* Rule 72(xii)—Equities.

[10] 17 CFR 242.600(b)(30).

[11] *See* BATS Rule 11.9(d); BATS–Y Rule 11.9(d); CHX Article 20, Rule 4(b)(1) and (15); EDGA Rule 11.5(d); EDGX Rule 11.5(d); Nasdaq Rule 4751(f)(6); Nasdaq OMX BX Rule 4751(f)(6); Nasdaq OMX PSX Rule 3301(f)(6); and NYSE Arca Equities Rule 7.31(jj).

cancelled.[12] Accordingly, the Exchange treats all ISOs with an immediate-or-cancel time-in-force condition.

Other equities exchanges do not limit their ISOs to an immediate-or-cancel time-in-force condition.[13] Accordingly, the Exchange proposes to amend Rule 13 governing ISOs to make available an ISO Order with a day time-in-force condition. As proposed, an ISO designated day (''Day ISO''), if marketable upon arrival, would be immediately and automatically executed against the displayed bid (offer) up to its full size in accordance with and to the extent provided by Rules 1000—Equities- 1004—Equities and would then sweep the Display Book,® as provided in Rule 1000—Equities(d)(iii). This proposed rule text is consistent with current paragraph (b) governing ISOs in Rule 13.

The Exchange further proposes to provide that the remaining unexecuted portion of a Day ISO would be posted to the Exchange's book at its limit price and may lock or cross a protected quotation that was displayed at the time of arrival of the Day ISO. The Exchange believes this proposed rule text is consistent with Regulation NMS and the rules of other exchanges because the member organization that sent the Day ISO to the Exchange has an existing obligation (pursuant to paragraph (a)(ii) governing ISOs in Rule 13) to simultaneously route ISOs to trade with the full size of protected quotations on other markets.[14] Accordingly, the Exchange would consider any protected quotes that existed at the time of arrival of the Day ISO as cleared when it posts any remainder of a Day ISO to the Exchange's book.[15]

The Exchange further proposes that a Day ISO must be entered with a minimum of one displayable round lot. Accordingly, similar to the proposed ALO Modifier for limit orders, Day ISOs would be available for Minimum Display Reserve Orders and Minimum Display Reserve e-Quotes. The Exchange also proposes that a Day ISO may also be designated ALO.

Because Day ISOs would not route, which is similar to the proposed ALO Modifier functionality, the Exchange proposes to re-price and re-display resting Day ISOs in a manner consistent with the proposed re-pricing and re-displaying functionality described above for limit orders designated ALO. As proposed, if, after posting, a Day ISO would lock or cross a protected quotation, the Exchange would re-price and re-display the order consistent with proposed paragraph (b) for ALO Modifiers in Rule 13. Accordingly, any such re-pricing would be based on the best-priced sell interest (for bids) or best-priced buy interest (for offers), as proposed in new Supplementary Material .10 to Rule 13.

The Exchange further proposes that a Day ISO designated ALO that is marketable upon arrival would follow a combination of both the Day ISO and ALO rules. Specifically, the Day ISO element of this order would be permitted to trade through away market protected quotations on arrival and lock or cross a protected quotation. In addition, the ALO element would require that this order not result in taking liquidity. Accordingly, the Exchange proposes that if a Day ISO designated ALO is marketable against Exchange interest on arrival, it would be re-priced and displayed one minimum price variation, as defined in supplementary material to Rule 62—Equities, below the Exchange's best-priced displayed or non-displayed non-MPL Order sell interest (for bids) or above the best-priced Exchange displayed or non-displayed non-MPL Order buy interest (for offers). Any re-pricing and display on arrival would ignore away-market protected quotations. As further proposed, once a Day ISO designated ALO has been posted to the Exchange's book, to assure that any subsequent re-pricing and re-displaying of a Day ISO designated ALO does not lock or cross a protected quotation, the Exchange proposes to follow the re-pricing rule set forth in proposed paragraph (b) for ALO Modifiers in this Rule. Therefore, any subsequent re-pricing would be based on the best-priced sell interest (for bids) or best-priced buy interest (for offers), as proposed in new Supplementary Material .10 to Rule 13.

For example, assume the BBO in XYZ is 10.05 x 10.11, the PBBO is 10.05 x 10.09, and the Exchange has a resting odd-lot order to sell priced at 10.07. In this scenario, the best-priced sell interest, as defined in new supplementary material .10 to Rule 13, would be 10.07. If the Exchange were to receive a Day ISO to buy at 10.12 (''Order D''), the Exchange would execute Order D against the resting odd-lot order to sell at 10.07, ignore the best protected offer of 10.09, and execute against the Exchange's best offer of 10.11. If there were any remaining quantity of Order D, it would post at 10.12. Although this 10.12 bid would cross the 10.09 PBO, the Exchange would consider that 10.09 PBO cleared pursuant to the existing obligation for the entering firm to have sent an ISO to trade with the full size of that PBO simultaneous with entering Order D at the Exchange.

Assume instead that the Day ISO to buy at 10.12 is also designated ALO (''Order E''). In this scenario, upon arrival, Order E would be re-priced and displayed at 10.06, which is one MPV below the Exchange's best priced non-displayed interest. Assume instead that the Exchange receives a Day ISO designated ALO to buy at 10.12 (''Order F''), but that when Order F arrives, the BBO is 10.05 x 10.11, the PBBO is 10.05 x 10.09, and the Exchange has no non-displayed sell interest. In this scenario, the Exchange would ignore the 10.09 PBO and Order F would be re-priced and displayed at 10.10, which is one MPV below the Exchange's best-priced displayed offer of 10.11. Assume the market updates and the BBO becomes 10.10 x 10.14 and the PBBO is 10.10 x 10.12. Order F would re-price and re-display one MPV below the best-priced sell interest, which here would be the 10.12 PBO. Accordingly, Order F would re-price and re-display at 10.11.

The Exchange also proposes to add new paragraph (e) governing ISOs in Rule 13 to specify that IOC ISOs and Day ISOs are not available for Sell ''Plus''—Buy ''Minus'' Orders or Non-Display Reserve Orders or Non-Display Reserve e-Quotes.

Finally, the Exchange proposes non-substantive changes to paragraph (a) defining ISOs to provide more detail regarding the current operation of ISOs, consistent with existing NYSE Arca Rule 7.31(jj). As proposed, the Exchange would define an ISO as a limit order designated for automatic execution in a particular security that is never routed to an away market, may trade through a protected bid or offer, and will not be rejected or cancelled if it would lock, cross, or be marketable against an away market provided that it meets the requirements described in the rule. The Exchange also proposes to make non-substantive, technical amendments to define the term ''Intermarket Sweep

[12] *See* paragraph (b) governing ISOs in Rule 13.

[13] The rules of Nasdaq, BATS, BATS–Y, EDGA, and EDGX do not expressly provide that their versions of ISOs can be day, however, nor do their rules prohibit this functionality. In practice, Nasdaq, BATS, BATS–Y EDGA, and EDGX all accept ISOs with a day time-in-force condition. In addition, NYSE Arca Equities expressly permits an ISO with a day time-in-force condition, which is entered as a Post No Preference (''PNP'') Order. *See, e.g.,* NYSE Arca Equities Rule 7.31(w) (PNP Order designated ISO does not route and may lock and cross and trade through protected quotations). *See also* Securities Exchange Act Release No. 34–54549 (Sept. 29, 2006), 71 FR 59179 (Oct. 6, 2006) (SR–NYSEArca-2006–59) (Order approving NYSE Arca Equities' proposal to adopt ISO PNP Orders, which post to NYSE's Arca book and may lock or cross protected quotations). *See also* CHX Article 20, Rules 4(b)(1) and (23).

[14] *See supra* n. 11.

[15] *See supra* n. 13.

Order'' as ''ISO'' and change references from ''Intermarket Sweep Order'' to ''ISO.'' The Exchange further proposes a non-substantive, technical change to define the existing form of an ISO as an ''ISO designated IOC ('IOC ISO').''

Because of the technology changes associated with this proposed rule change, the Exchange proposes to announce the implementation date of ALO Modifiers for day limit orders and Day ISOs by Trader Update.

2. Statutory Basis

The proposed rule change is consistent with Section 6(b) [16] of the Act, in general, and furthers the objectives of Section 6(b)(5),[17] in particular, in that it is designed to promote just and equitable principles of trade, remove impediments to and perfect the mechanism of a free and open market and a national market system and, in general, to protect investors and the public interest.

The Exchange believes that the proposal is designed to remove impediments to and perfect the mechanism of a free and open market and a national market system because the expansion of the availability of ALO Modifiers for day limit orders will increase competition, not only among market participants, but also among exchanges offering similar functionality. Specifically, all other equity exchanges currently enable member firms to enter limit orders that would only post on the designated exchange and not route.[18] The Exchange proposes to expand its existing ALO functionality, consistent with other markets, to also make it available for limit orders. The Exchange believes that requiring limit orders designated ALO to be entered with a minimum display quantity will help perfect the mechanism of a free and open market by encouraging additional displayed liquidity on a public registered exchange, and therefore promote price discovery. The Exchange further believes that the proposed re-pricing and re-displaying of a limit order designated ALO removes impediments to and perfects the mechanism of a free and open market because it assures that such an order would meet its intended goal to be available on the Exchange's book as displayed liquidity without locking or crossing a protected quotation in violation of Rule 610(d) of Regulation NMS.[19] The Exchange further notes that the proposed re-pricing and re-displaying of limit orders designated ALO is consistent with how other exchanges currently operate.[20]

The Exchange also believes that adding a day time-in-force condition for ISOs, an existing order type on the Exchange, is designed to remove impediments to and perfect the mechanism of a free and open market and national market system because the proposed expansion is consistent with the definition of an ISO under Regulation NMS[21] and with the operation of how ISOs may be entered on other exchanges, including that it may trade through protected quotations on arrival and display on the Exchange at a price that may lock or cross a protected quotation.[22] The Exchange further believes that any subsequent re-pricing and re-displaying of a Day ISO after it has posted on the Book will meet the entering firm's expectations that a Day ISO order not route, while at the same time ensure that it would not lock or cross a protected quotation in violation of Rule 610(d) of Regulation NMS.[23]

(B) Self-Regulatory Organization's Statement on Burden on Competition

The Exchange does not believe that the proposed rule change will impose any burden on competition that is not necessary or appropriate in furtherance of the purposes of the Act. Rather, the Exchange believes that the proposed rule change is pro-competitive because it expands the functionality associated with existing Exchange order types to conform to how these order types already operate on other exchanges, thereby harmonizing the forms of order types available for market participants that trade on equity exchanges.[24]

(C) Self-Regulatory Organization's Statement on Comments on the Proposed Rule Change Received From Members, Participants or Others

No written comments were solicited or received with respect to the proposed rule change.

III. Date of Effectiveness of the Proposed Rule Change and Timing for Commission Action

Within 45 days of the date of publication of this notice in the **Federal Register** or within such longer period up to 90 days (i) as the Commission may designate if it finds such longer period to be appropriate and publishes its reasons for so finding or (ii) as to which the self-regulatory organization consents, the Commission will:

(A) By order approve or disapprove such proposed rule change, or

(B) institute proceedings to determine whether the proposed rule change should be disapproved.

IV. Solicitation of Comments

Interested persons are invited to submit written data, views, and arguments concerning the foregoing, including whether the proposed rule change is consistent with the Act. Comments may be submitted by any of the following methods:

Electronic Comments

- Use the Commission's Internet comment form (*http://www.sec.gov/rules/sro.shtml*) or send an email to *rule-comments@sec.gov*. Please include File Number SR–NYSEMKT–2014–56 on the subject line.

Paper Comments

- Send paper comments in triplicate to Secretary, Securities and Exchange Commission, 100 F Street NE., Washington, DC 20549–1090.

All submissions should refer to File Number SR–NYSEMKT–2014–56. This file number should be included on the subject line if email is used. To help the Commission process and review your comments more efficiently, please use only one method. The Commission will post all comments on the Commission's Internet Web site (*http://www.sec.gov/rules/sro.shtml*). Copies of the submission, all subsequent amendments, all written statements with respect to the proposed rule change that are filed with the Commission, and all written communications relating to the proposed rule change between the Commission and any person, other than those that may be withheld from the public in accordance with the provisions of 5 U.S.C. 552, will be available for Web site viewing and printing in the Commission's Public Reference Room, 100 F Street NE., Washington, DC 20549, on official business days between the hours of 10:00 a.m. and 3:00 p.m. Copies of such filing also will be available for

[16] 15 U.S.C. 78f(b).

[17] 15 U.S.C. 78f(b)(5).

[18] *See supra* n. 5.

[19] 17 CFR 242.610(d).

[20] *See supra* n. 8.

[21] 17 CFR 242. 600 (b)(3) and *supra* n. 11.

[22] *See supra* n. 13, 71 FR at 59181 (''If an ISO is not marked as 'immediate or cancel,' any remaining balance in the order would be displayed by the Exchange without regard to whether that display would lock or cross another market center, only if the participant routing the order has already sent an order to satisfy the quotations of other markets so that the display of the order would not lock or cross those markets.'') and at 59182 (approving, among other things, NYSE Arca's proposed ISO order type and finding that it is consistent with the Act).

[23] 17 CFR 242.610(d).

[24] *See supra,* nn. 5, 11, and 13.

inspection and copying at the NYSE's principal office and on its Internet Web site at *www.nyse.com.*. All comments received will be posted without change; the Commission does not edit personal identifying information from submissions. You should submit only information that you wish to make available publicly. All submissions should refer to File Number SR–NYSEMKT–2014–56 and should be submitted on or before August 1, 2014.

For the Commission, by the Division of Trading and Markets, pursuant to delegated authority.[25]

Kevin M. O'Neill,

Deputy Secretary.

[FR Doc. 2014–16190 Filed 7–10–14; 8:45 am]

BILLING CODE 8011–01–P

SECURITIES AND EXCHANGE COMMISSION

[Release No. 34–72549; File No. SR–NASDAQ–2014–069]

Self-Regulatory Organizations; The NASDAQ Stock Market LLC; Notice of Filing and Immediate Effectiveness of Proposed Rule Change To Modify NASDAQ Rule 7018 Fees

July 7, 2014.

Pursuant to Section 19(b)(1) of the Securities Exchange Act of 1934 (''Act''),[1] and Rule 19b–4 thereunder,[2] notice is hereby given that on July 1, 2014, The NASDAQ Stock Market LLC (''NASDAQ'' or the ''Exchange'') filed with the Securities and Exchange Commission (''Commission'') a proposed rule change as described in Items I, II and III below, which Items have been prepared by the Exchange. The Commission is publishing this notice to solicit comments on the proposed rule change from interested persons.

I. Self-Regulatory Organization's Statement of the Terms of the Substance of the Proposed Rule Change

NASDAQ is proposing to modify NASDAQ Rule 7018 fees assessed for execution and routing securities listed on NASDAQ, the New York Stock Exchange (''NYSE'') and on exchanges other than NASDAQ and NYSE.

The text of the proposed rule change is available at at NASDAQ's principal office, and at the Commission's Public Reference Room.

II. Self-Regulatory Organization's Statement of the Purpose of, and Statutory Basis for, the Proposed Rule Change

In its filing with the Commission, NASDAQ included statements concerning the purpose of, and basis for, the proposed rule change and discussed any comments it received on the proposed rule change. The text of those statements may be examined at the places specified in Item IV below. The Exchange has prepared summaries, set forth in sections A, B, and C below, of the most significant parts of such statements.

A. Self-Regulatory Organization's Statement of the Purpose of, and Statutory Basis for, the Proposed Rule Change

1. Purpose

NASDAQ is proposing to amend NASDAQ Rule 7018 to modify fees assessed for execution and routing securities listed on NASDAQ, NYSE (''Tape A'') and on exchanges other than NASDAQ and the NYSE (''Tape B''), as well as to make nonsubstantive changes to NASDAQ Rule 7018(a)(2) and (3) for the purposes of consistency in the manner that these subsections are organized within NASDAQ Rule 7018(a) and for improved clarity.

NASDAQ is also proposing to create a new credit tier of $0.0025 per share executed for members that provide a daily average of at least 4 million shares of liquidity, which includes greater than 1.5 million shares per day of non-displayed liquidity, excluding midpoint orders. The Exchange believes that it does not need to include midpoint orders as part of this incentive as the Exchange has ample midpoint liquidity available for members to access. The Exchange believes that the proposed new fee tier will also encourage market participant activity and will also support price discovery and liquidity provision.

The Exchange also proposes to make nonsubstantive changes to NASDAQ Rule 7018(a)(2) and (3) for purposes of consistency in the manner in which these subsections are organized and for improved clarity. Specifically, the entry in these subsections for ''firms that execute against resting midpoint liquidity'' and its corresponding fee of $0.0027 per share executed, have been moved-up within both NASDAQ Rule 7018(a)(2) and (3) verbatim so that within each subsection it will be properly situated as falling under the headings ''Charge to enter orders that execute in the Nasdaq Market Center'' and ''Charge to member entering order that executes in the Nasdaq Market Center'', respectively.

2. Statutory Basis

NASDAQ believes that the proposed rule change is consistent with the provisions of Section 6 of the Act,[3] in general, and with Sections 6(b)(4) and 6(b)(5) of the Act,[4] in particular, in that it provides for the equitable allocation of reasonable dues, fees and other charges among members and issuers and other persons using any facility or system which NASDAQ operates or controls, and is not designed to permit unfair discrimination between customers, issuers, brokers, or dealers. This proposal is reasonable, equitable and not unfairly discriminatory for the reasons noted below.

The Exchange's proposal for a new credit tier of $0.0025 per share executed for members that provide a daily average of at least 4 million shares of liquidity, which includes greater than 1.5 million shares per day of non-displayed liquidity, excluding midpoint orders, is consistent with an equitable allocation of fees and is not unfairly discriminatory because it remains consistent with the Exchange's approach of providing a credit to members that provide shares of liquidity, which benefits all market participants, and is applicable to all such orders and applies uniformly across all markets. Also, the Exchange believes it is reasonable to use pricing incentives, such as a new tier, because this new tier provides additional opportunities for members to increase their participation in the market.

The Exchange also proposes to make nonsubstantive changes to NASDAQ Rule 7018. Specifically, under both NASDAQ Rule 7018(a)(2) and (3) the entry for ''firms that execute against resting midpoint liquidity'' and its corresponding fee of $0.0027 per share executed, have been moved-up within each of these subsections verbatim so that within each subsection it will be properly situated as falling under the headings ''Charge to enter orders that execute in the Nasdaq Market Center'' and ''Charge to member entering order that executes in the Nasdaq Market Center'', respectively. These changes are intended to reflect greater consistency in the manner in which these subsections are organized within NASDAQ Rule 7018(a) and for improved clarity.

[25] 17 CFR 200.30–3(a)(12).

[1] 15 U.S.C. 78s(b)(1).

[2] 17 CFR 240.19b–4.

[3] 15 U.S.C. 78f.

[4] 15 U.S.C. 78f(b)(4) and (5).

B. Self-Regulatory Organization's Statement on Burden on Competition

NASDAQ does not believe that the proposed rule changes will result in any burden on competition that is not necessary or appropriate in furtherance of the purposes of the Act, as amended.[5] NASDAQ notes that it operates in a highly competitive market in which market participants can readily favor competing venues if they deem fee levels at a particular venue to be excessive, or rebate opportunities available at other venues to be more favorable. In such an environment, NASDAQ must continually adjust its fees to remain competitive with other exchanges and with alternative trading systems that have been exempted from compliance with the statutory standards applicable to exchanges. Because competitors are free to modify their own fees in response, and because market participants may readily adjust their order routing practices, NASDAQ believes that the degree to which fee changes in this market may impose any burden on competition is extremely limited. In this instance, the establishment of a new fee tier for members that provide a daily average of at least 4 million shares of liquidity, which includes greater than 1.5 million shares per day of non-displayed liquidity, excluding midpoint orders, reflects this.

Accordingly, NASDAQ does not believe that the proposed changes will impair the ability of members or competing order execution venues to maintain their competitive standing in the financial markets.

C. Self-Regulatory Organization's Statement on Comments on the Proposed Rule Change Received From Members, Participants, or Others

Written comments were neither solicited nor received.

III. Date of Effectiveness of the Proposed Rule Change and Timing for Commission Action

The foregoing change has become effective pursuant to Section 19(b)(3)(A) of the Act,[6] and paragraph (f)[7] of Rule 19b–4, thereunder. At any time within 60 days of the filing of the proposed rule change, the Commission summarily may temporarily suspend such rule change if it appears to the Commission that such action is necessary or appropriate in the public interest, for the protection of investors, or otherwise in furtherance of the purposes of the Act.

IV. Solicitation of Comments

Interested persons are invited to submit written data, views, and arguments concerning the foregoing, including whether the proposed rule change is consistent with the Act. Comments may be submitted by any of the following methods:

Electronic Comments

- Use the Commission's Internet comment form (*http://www.sec.gov/rules/sro.shtml*); or
- Send an email to *rule-comments@sec.gov*. Please include File Number SR–NASDAQ–2014–069 on the subject line.

Paper Comments

- Send paper comments in triplicate to Secretary, Securities and Exchange Commission, 100 F Street NE., Washington, DC 20549–1090.

All submissions should refer to File Number SR–NASDAQ–2014–069. This file number should be included on the subject line if email is used. To help the Commission process and review your comments more efficiently, please use only one method. The Commission will post all comments on the Commission's Internet Web site (*http://www.sec.gov/rules/sro.shtml*). Copies of the submission, all subsequent amendments, all written statements with respect to the proposed rule change that are filed with the Commission, and all written communications relating to the proposed rule change between the Commission and any person, other than those that may be withheld from the public in accordance with the provisions of 5 U.S.C. 552, will be available for Web site viewing and printing in the Commission's Public Reference Room, 100 F Street NE., Washington, DC 20549 on official business days between the hours of 10:00 a.m. and 3:00 p.m. Copies of such filing also will be available for inspection and copying at the principal offices of the Exchange. All comments received will be posted without change; the Commission does not edit personal identifying information from submissions. You should submit only information that you wish to make available publicly. All submissions should refer to File Number SR–NASDAQ–2014–069, and should be submitted on or beforeAugust 1, 2014.

For the Commission, by the Division of Trading and Markets, pursuant to delegated authority.[8]

Kevin M. O' Neill,

Deputy Secretary.

[FR Doc. 2014–16192 Filed 7–10–14; 8:45 am]

BILLING CODE 8011–01–P

[5] 15 U.S.C. 78f(b)(8).

[6] 15 U.S.C. 78s(b)(3)(A).

[7] 17 CFR 240.19b–4(f).

[8] 17 CFR 200.30–3(a)(12).

SECURITIES AND EXCHANGE COMMISSION

[Release No. 34–72546; File No. SR–Phlx–2014–40]

Self-Regulatory Organizations; NASDAQ OMX PHLX LLC; Notice of Filing and Immediate Effectiveness of Proposed Rule Change To Eliminate the Midpoint Peg Post-Only Order and Modify the Minimum Quantity Order on NASDAQ OMX PSX

July 7, 2014.

Pursuant to Section 19(b)(1) of the Securities Exchange Act of 1934 (''Act''),[1] and Rule 19b–4 thereunder,[2] notice is hereby given that on June 23, 2014, NASDAQ OMX PHLX LLC (''Phlx'' or ''Exchange'') filed with the Securities and Exchange Commission (''Commission'') the proposed rule change as described in Items I, II, and III below, which Items have been prepared by the Exchange. The Commission is publishing this notice to solicit comments on the proposed rule change from interested persons.

I. Self-Regulatory Organization's Statement of the Terms of Substance of the Proposed Rule Change

The Exchange proposes to eliminate the Midpoint Peg Post-Only Order and to modify the functioning of the Minimum Quantity Order on NASDAQ OMX PSX (''PSX''). The text of the proposed rule change is available at *http://nasdaqomxphlx.cchwallstreet.com/nasdaqomxphlx/phlx/,* at the Exchange's principal office, and at the Commission's Public Reference Room.

II. Self-Regulatory Organization's Statement of the Purpose of, and Statutory Basis for, the Proposed Rule Change

In its filing with the Commission, the Exchange included statements concerning the purpose of and basis for the proposed rule change and discussed any comments it received on the proposed rule change. The text of these statements may be examined at the places specified in Item IV below. The

[1] 15 U.S.C. 78s(b)(1).

[2] 17 CFR 240.19b–4.

Exchange has prepared summaries, set forth in Sections A, B, and C below, of the most significant aspects of such statements.

A. Self-Regulatory Organization's Statement of the Purpose of, and Statutory Basis for, the Proposed Rule Change

1. Purpose

Phlx is proposing two modifications to order types on PSX. First, Phlx is proposing to eliminate the Midpoint Peg Post-Only Order. Like a regular Midpoint Pegged Order, a Midpoint Peg Post-Only Order is a non-displayed order that is priced at the midpoint between the national best bid and best offer (''NBBO''). However, like a Post-Only Order, the Midpoint Peg Post-Only Order does not remove liquidity from PSX upon entry if it would lock a non-displayed order on PSX. Rather, the Midpoint Peg Post-Only Order posts and locks the pre-existing order, but remains undisplayed. If a Midpoint Peg Post-Only Order would cross a pre-existing order, however, the crossing orders will execute. A Midpoint Peg Post-Only Order that posts to the book and locks a pre-existing non-displayed order executes against an incoming order only if the price of the incoming buy (sell) order is higher (lower) than the price of the pre-existing order. If a Midpoint Pegged Order and a Midpoint Peg Post-Only Order are locked, and a Midpoint Pegged Order is entered on the same side of the market as the Midpoint Peg Post-Only Order, the new order executes against the original Midpoint Pegged Order, because the market participant entering the Midpoint Peg Post-Only Order has expressed its intention not to execute against posted liquidity, and therefore cedes execution priority to the new order.

In a pricing environment characterized by fees on one side of a trade being used to fund rebates on the other side, the Midpoint Peg Post-Only Order and similar orders were introduced on PSX and various other markets to allow market participants to structure their trading activity in a manner that is more likely to avoid a fee and earn a rebate. In exchange, the party entering the order also generally provides price improvement to its counterparty. In order to simplify order processing and evaluate the effect of the order type on overall market quality, however, PSX is proposing to eliminate the Midpoint Peg Post-Only Order, while retaining the Midpoint Pegged Order as a means by which market participants may offer hidden liquidity with price improvement at the midpoint between the NBBO.[3]

Phlx is also proposing to modify the functioning of PSX's Minimum Quantity Order. A Minimum Quantity Order is an order that will not execute unless a specified minimum quantity of shares can be obtained. Minimum Quantity Orders are not displayed, and upon entry must have a size and a minimum quantity condition of at least one round lot. In the event that the shares remaining in the size of the order following a partial execution thereof are less than the minimum quantity specified by the market participant entering the order, the minimum quantity value of the order is reduced to the number of shares remaining. Phlx is proposing to modify this final condition, so that if the shares remaining in the size of the order are less than one round lot, the minimum quantity condition will be removed from the order. The change will simplify processing of Minimum Quantity Orders by ensuring that once a partially executed order is reduced in size to less than one round lot (generally 100 shares), no restrictions prevent execution of the remainder of the order. The change is also consistent with the existing requirement that a Minimum Quantity Order must be entered with a size and a minimum quantity restriction of at least one round lot. Phlx believes that the change will improve the efficiency of order processing on PSX by limiting the extent to which small Minimum Quantity Orders remain on the PSX book.

Phlx proposes to implement the rule change on or shortly after a date that is thirty days after the date of this proposed rule change, and will notify members of the date of implementation through a widely disseminated notice.

2. Statutory Basis

Phlx believes that the proposed rule change is consistent with the provisions of Section 6 of the Act,[4] in general, and with Section 6(b)(5) of the Act,[5] in particular, in that the proposal is designed to prevent fraudulent and manipulative acts and practices, to promote just and equitable principles of trade, to foster cooperation and coordination with persons engaged in regulating, clearing, settling, processing information with respect to, and facilitating transactions in securities, to remove impediments to and perfect the mechanism of a free and open market and a national market system, and, in general, to protect investors and the public interest.

Although the availability of the Midpoint Peg Post-Only Order is consistent with the Act because the order type was designed to provide market participants with better control over their execution costs and to provide a means to offer price improvement opportunities, Phlx believes that the elimination of the order type, together with the continued availability of the Midpoint Pegged Order are likewise consistent with the Act. Specifically, the proposal would allow market participants that seek to provide liquidity at the midpoint between the NBBO to use the Midpoint Pegged Order to do so. Accordingly, the change is designed to facilitate transactions in securities, to remove impediments to and perfect the mechanism of a free and open market and a national market system, and, in general, to protect investors and the public interest, by reducing the complexity of order-type interaction on PSX while still allowing for liquidity provision with price improvement at the midpoint.

The proposed change to Minimum Quantity Orders is consistent with the Act because it will promote the complete execution of partially executed Minimum Quantity Orders once the order is reduced in size to less than one round lot. The change will thereby remove impediments to a free and open market by promoting order interaction and reducing the complexity of PSX's order processing.

B. Self-Regulatory Organization's Statement on Burden on Competition

Phlx does not believe that the proposed rule change will result in any burden on competition that is not necessary or appropriate in furtherance of the purposes of the Act, as amended. The change to eliminate the Midpoint Peg Post-Only Order will provide a means by which PSX may distinguish itself from trading venues that offer orders similar to the Midpoint Peg Post-Only Order. Accordingly, the change has the potential to promote competition by allowing PSX to differentiate itself from other trading venues. Similarly, the proposed change to the Midpoint Peg Post-Only Order and Minimum Quantity Orders has the potential to promote competition by enhancing the efficiency of PSX's processing of orders. In both instances, the changes would not affect the ability of market participants to avail themselves of alternative order-type

[3] In addition to eliminating the order description from Rule 3301, Phlx is also making conforming changes to Rule 3305 and the NASDAQ OMX PHLX LLC Pricing Schedule.

[4] 15 U.S.C. 78f.

[5] 15 U.S.C. 78f(b)(5).

processing at other trading venues, and therefore would not impose any burden on competition.

C. Self-Regulatory Organization's Statement on Comments on the Proposed Rule Change Received From Members, Participants, or Others

Written comments were neither solicited nor received.

III. Date of Effectiveness of the Proposed Rule Change and Timing for Commission Action

Because the foregoing proposed rule change does not: (i) Significantly affect the protection of investors or the public interest; (ii) impose any significant burden on competition; and (iii) become operative for 30 days from the date on which it was filed, or such shorter time as the Commission may designate, it has become effective pursuant to Section 19(b)(3)(A)(ii) of the Act [6] and subparagraph (f)(6) of Rule 19b–4 thereunder.[7]

At any time within 60 days of the filing of the proposed rule change, the Commission summarily may temporarily suspend such rule change if it appears to the Commission that such action is: (i) necessary or appropriate in the public interest; (ii) for the protection of investors; or (iii) otherwise in furtherance of the purposes of the Act. If the Commission takes such action, the Commission shall institute proceedings to determine whether the proposed rule should be approved or disapproved.

IV. Solicitation of Comments

Interested persons are invited to submit written data, views, and arguments concerning the foregoing, including whether the proposed rule change, as amended, is consistent with the Act. Comments may be submitted by any of the following methods:

Electronic Comments

- Use the Commission's Internet comment form (*http://www.sec.gov/rules/sro.shtml*); or
- Send an email to *rule-comments@sec.gov*. Please include File Number SR–Phlx–2014–40 on the subject line.

Paper Comments

- Send paper comments in triplicate to Secretary, Securities and Exchange Commission, 100 F Street NE., Washington, DC 20549–1090.

All submissions should refer to File Number SR–Phlx–2014–40. This file number should be included on the subject line if email is used.

To help the Commission process and review your comments more efficiently, please use only one method. The Commission will post all comments on the Commission's Internet Web site (*http://www.sec.gov/rules/sro.shtml*). Copies of the submission, all subsequent amendments, all written statements with respect to the proposed rule change that are filed with the Commission, and all written communications relating to the proposed rule change between the Commission and any person, other than those that may be withheld from the public in accordance with the provisions of 5 U.S.C. 552, will be available for Web site viewing and printing in the Commission's Public Reference Room, 100 F Street NE., Washington, DC 20549, on official business days between the hours of 10:00 a.m. and 3:00 p.m. Copies of such filing also will be available for inspection and copying at the principal offices of the Exchange. All comments received will be posted without change; the Commission does not edit personal identifying information from submissions. You should submit only information that you wish to make available publicly. All submissions should refer to File Number SR–Phlx–2014–40, and should be submitted on or before August 1, 2014.

For the Commission, by the Division of Trading and Markets, pursuant to delegated authority.[8]

Kevin M. O'Neill,

Deputy Secretary.

[FR Doc. 2014–16189 Filed 7–10–14; 8:45 am]

BILLING CODE 8011–01–P

[6] 15 U.S.C. 78s(b)(3)(a)(ii) [sic].

[7] 17 CFR 240.19b–4(f)(6). In addition, Rule 19b–4(f)(6) requires a self-regulatory organization to give the Commission written notice of its intent to file the proposed rule change at least five business days prior to the date of filing of the proposed rule change, or such shorter time as designated by the Commission. The Exchange has satisfied this requirement.

[8] 17 CFR 200.30–3(a)(12).

SECURITIES AND EXCHANGE COMMISSION

[Release No. 34–72550; File No. SR–OCC–2014–802]

Self-Regulatory Organizations; The Options Clearing Corporation; Notice of No Objection to Advance Notice Filing Concerning the Consolidation of the Governance Committee and Nominating Committee Into a Single Committee, Changes to the Nominating Process for Directors, and Increasing the Number of Public Directors on The Options Clearing Corporation's Board of Directors

July 7, 2014.

On May 8, 2014, The Options Clearing Corporation (''OCC'') filed with the Securities and Exchange Commission (''Commission'') advance notice SR–OCC–2014–802 (''Advance Notice'') pursuant to Section 806(e)(1) of the Payment, Clearing, and Settlement Supervision Act of 2010 (''Clearing Supervision Act'' or ''Title VIII'') [1] and Rule 19b–4(n)(1)(i) under the Securities Exchange Act of 1934 (''Exchange Act'').[2] The Advance Notice was published for comment in the **Federal Register** on June 3, 2014.[3] The Commission did not receive any comments on the Advance Notice publication. This publication serves as a notice of no objection to the Advance Notice.

I. Description of the Advance Notice

OCC is proposing to: (i) amend its By-Laws and Governance Committee Charter to combine the current Nominating Committee (''NC'') and Governance Committee (''GC'') to establish a single Governance and Nominating Committee (''GNC''), (ii) make changes concerning OCC's nomination process for Directors, and (iii) increase the number of Public Directors on OCC's Board of Directors (''Board'') from three to five. The proposed modifications are based on recommendations from the GC in the course of carrying out its mandate of

[1] 12 U.S.C. 5465(e)(1).

[2] 17 CFR 240.19b–4(n)(1)(i). OCC is a designated financial market utility and is required to file advance notices with the Commission. *See* 12 U.S.C. 5465(e). OCC also filed the proposal contained in the Advance Notice as a proposed rule change under Section 19(b)(1) of the Exchange Act and Rule 19b–4 thereunder. *See* SR–OCC–2014–09. The Commission published notice of the proposed rule change in the **Federal Register** on May 30, 2014 and did not receive any comments on the proposal. *See* Exchange Act Release No. 34–72242 (May 23, 2014), 79 FR 31166 (May 30, 2014) (SR–OCC–2014–09).

[3] Release No. 34–72268 (May 28, 2014), 79 FR 31998 (June 3, 2014) (SR–OCC–2014–802) (''Notice'').

reviewing the overall corporate governance of OCC and recommending improvements to the structure of OCC's Board. In part, the GC's recommendations stem from suggestions of an outside consultant that was retained to review and report on OCC's governance structure in relationship to industry governance practices. To conform to these proposed changes, OCC is also proposing to make certain edits to its Stockholders Agreement, Board of Directors Charter, and Fitness Standards for Directors.

Currently, the GC operates pursuant to its own Charter.[4] The NC is not a Board level Committee and does not operate pursuant to a charter; however, provisions in Article III of OCC's By-Laws prescribe certain aspects of the NC's structure and operation. OCC is proposing to apply to the GNC many of the existing provisions of the relevant By-Laws and GC Charter that apply to the NC and GC. Where OCC is proposing amendments to the existing By-Laws and GC Charter, they are discussed below.

Certain provisions of Article III of OCC's By-Laws govern the role the NC plays in nominating persons as Member Directors [5] on OCC's Board as well as the composition and structure of the NC itself. The NC is required to endeavor to achieve balanced representation in its Member Director and Non-Director Member nominees, giving due consideration to business activities and geographic distribution.

Presently, the NC is composed of seven total members: one Public Director and six Non-Director Members.[6] The Public Director member, who is nominated by the Executive Chairman with the approval of a majority of the Board, generally serves a three year term, unless she ceases to be a Public Director. The six Non-Director Members nominated by the NC and selected by OCC's stockholders are divided into two equal classes of three members, and the classes serve staggered two year terms.[7] By comparison, the GC Charter requires the current GC to have no fewer than five directors and to include at least one Public Director, at least one Exchange Director, and at least one Member Director. It also provides that no Management Directors may serve on the Committee.

OCC's Board currently has 19 members consisting of nine Member Directors, five Exchange Directors, three Public Directors, and two Management Directors.[8] Based on recommendations from the GC in the course of review of OCC's overall corporate governance, OCC is proposing certain amendments detailed below to merge OCC's NC and GC into a single GNC and increase the number of Public Directors from three to five.

A. Proposed Amendments Common to the By-Laws and Other OCC Governance Documents

Certain of the proposed changes would amend the existing By-Laws as well as other governance documents of OCC. For example, conforming edits would be made throughout the By-Laws and GC Charter to delete NC and GC references and in many cases those references would be replaced with references to the GNC.

1. GNC Composition

The new GNC would be composed of a minimum of three total members: at least one Public Director, at least one Exchange Director and at least one Member Director. To reflect this change, OCC would eliminate in Section 4 of Article III of the By-Laws the requirement for six Non-Director Members, add requirements for at least one Member Director and one Exchange Director, and modify the current requirement for one Public Director to instead require that there must be at least one Public Director. The proposed composition for the GNC already mirrors the existing composition specified in the GC Charter. Therefore, no changes are proposed to the current GC Charter in that respect, other than the elimination of the requirements that the GNC have no fewer than five directors. In its filing with the Commission, OCC stated that limitation would be eliminated with the goal of providing the Board with greater flexibility to determine the optimal size and composition of the GNC, so long as the composition also facilitates diverse representation by satisfying the proposed requirement for at least one GNC representative from each of the Member Director, Exchange Director, and Public Director categories. The prohibition on Management Directors serving on the GC would continue to apply to the GNC.

2. GNC Member Appointment Process and Term Limits

The members of the GNC would be appointed annually by the Board from among certain Board members recommended by the GNC after consultation with OCC's Executive Chairman. GNC Members would serve at the pleasure of the Board. The GNC's Chairman (''GNC Chair'') would be designated from among the GNC's Public Directors. Provisions implementing these changes would be added to Section 4 of Article III of the By-Laws to entirely supplant the class and term limit structure and nominations process that currently applies to the NC and its Non-Director Members and Public Director, and references to Non-Director Members would be removed from the By-Laws. Section II.A. The GC Charter would also be amended to reflect this structure for GNC nominations and appointments.

3. Number of Public Directors and Member Directors

OCC is proposing to amend its By-Laws to increase the number of Public Directors on its Board from three to five. It is also making certain other changes related to the overall composition of the Board and the classification and term of office of Public Directors. The proposed change in the number of Public Directors from three to five would reconstitute OCC's Board with a total of 21 directors. OCC believes that, as indicated in its initial proposal to add Public Directors to its Board,[9] Public Directors broaden the mix of viewpoints and business expertise that is represented on the Board. Accordingly, OCC believes that the input and expertise of two more Public Directors will further benefit OCC in the administration of its affairs in respect of the markets that it serves, and in the discharge of its obligations as a systemically important financial market utility.

The proposed changes would remove a provision that, under certain

[4] Securities Exchange Act Release Nos. 71030 (Dec. 11, 2013), 78 FR 7612 (Dec. 16, 2013) (SR–OCC–2013–18); 71083 (Dec. 16, 2013), 78 FR 77182 (Dec. 20, 2013) (SR–OCC–2013–807).

[5] Under Article III, Section 2 every Member Director must be either a Clearing Member or a representative of a Clearing Member Organization.

[6] Under Sections 4 and 5 of Article III, a Non-Director Member of the NC must be a representative of a Clearing Member and no person associated with the same Clearing Member Organization as a member of the NC may be nominated by the NC for a position as a Member Director on the Board of Directors or a Non-Director Member of the NC for the ensuing year.

[7] This tiered structure eliminated the complete turnover of the members of the NC each year and fostered greater continuity among its elected members. Securities Exchange Act Release No. 29437 (July 12, 1991), 56 FR 33319 (July 19, 1991) (SR–OCC–91–11).

[8] Public Directors may not be affiliated with any national securities exchange or national securities association or any broker or dealer in securities, and OCC's Executive Chairman and President, who are Management Directors. See OCC By-Laws Article III, Section 6A.

[9] Securities Exchange Act Release No. 30328 (January 31, 1992), 57 FR 4784 (February 7, 1992) (SR–OCC–1992–02).

conditions, automatically adjusts the number of Member Directors serving on the Board. OCC's By-Laws currently require that if the aggregate number of Exchange Directors and Public Directors equals at least nine, the total number of Member Directors must be automatically adjusted to exceed that number by one.[10] This provision would be removed.[11] OCC believes that its removal will provide the Board with greater flexibility to determine its optimal composition. The proposed changes also remove a provision that reduces the number of Member Directors if the number is above nine and exceeds the sum of the number of Exchange Directors and the number of Public Directors by more than one, because the number of Member Directors would be fixed at nine.

OCC is also proposing certain amendments to its Stockholders Agreement, Board of Directors Charter and Fitness Standards for Directors, Clearing Members and Others. In each case, conforming changes would be made to recognize the merger of the NC and GC into the GNC as a standing Committee of the Board and reflect the role it would play in OCC's director nomination process. The proposed modifications to the Board Charter and Fitness Standards would reflect the increase in the number of Public Directors serving on the Board from three to five and the removal of the provision that currently is designed under certain conditions to automatically adjust the number of Member Directors serving on the Board. The criteria specified in the Fitness Standards for Directors, Clearing Members and Others for use in considering individuals nominated to be Member Director would also be revised for consistency with the criteria proposed to be added to Article III, Section 5 of the By-Laws, discussed below, designed to achieve balanced Board representation.

The Stockholders Agreement also contains proposed amendments to replace the term Chairman with Executive Chairman. This parallels a separate proposed amendment by OCC to implement this change in its By-Laws and Rules, but a consolidated amendment to the Stockholders Agreement is proposed for ease of administration.

[10] OCC By-Laws Article III, Section 1.

[11] OCC also proposes to make corresponding changes to Article III, Section 3 of its By-Laws under which it would remove provisions that provide for the classification and term of office of Member Directors where the number of Member Directors increases based on the provision in Article III, Section 1 that OCC proposes to delete.

B. Proposed Amendments to By-Laws Only

As explained in more detail below, certain of the proposed changes would require amendments only to OCC's existing By-Laws. One such example is that Sections 2 and 5 of Article III of the By-Laws would be amended to remove prohibitions against representation of the same Clearing Member Organization on the Board and the NC.[12] This barrier would be eliminated since GNC members will be selected from among the members of the Board under the new approach.

1. Balanced Representation

The NC's responsibility to endeavor to achieve balanced representation among Clearing Members on the Board would be carried over to the GNC. Specifically, the GNC would be required to ensure that (1) not all of the Member Directors are from members having the largest volume of business with OCC during the prior year and (2) the mix of Member Directors includes members primarily engaged in agency trading on behalf of retail investors.

2. Nomination and Election Process

The Board would appoint members to the GNC from among the Board's members who are recommended by the GNC. This change requires certain proposed modifications to the nomination and election process currently reflected in Article III, Section 5 of the By-Laws. Changes are also proposed that would change the deadlines for nominations of Member Directors by both the GNC and Clearing Members, and OCC would preserve the petition process by which Clearing Members may nominate additional candidates to be Member Directors on the Board. In recognition of the elimination of the concept of Non-Director Members, several provisions in Section 5 of Article III of the By-Laws addressing the ability of stockholders to elect or nominate Non-Director Members of the NC would be deleted. In relevant part, however, these provisions would be retained to the extent they apply to the ability of stockholders under certain conditions to nominate and elect Member Directors of the Board.

3. Public Directors

Proposed changes to Section 6A of Article III of the By-Laws would require the GNC to nominate Public Directors for election by OCC's stockholders and to use OCC's fitness standards in making such nominations. Presently, OCC's Executive Chairman nominates Public Directors with Board approval. Changes are also proposed to help clarify the class structure and term limits of Public Directors that are independent of changes proposed to facilitate the formation of the GNC.[13]

The proposed changes to Article III, Section 6A of the By-Laws would also provide for the classification of the two new Public Directors. One of the new Public Directors will be designated as a Class I Public Director, and the other will be designated as a Class III Public Director. The proposed changes also establish the times at which the successors of the two new Public Directors will be elected. The successor of the new Public Director that is a Class III Public Director will be elected at the 2015 annual meeting of stockholders, and the successor of the new Public Director that is a Class I Public Director will be elected at the 2016 annual meeting.

4. Disqualifications and Filling Vacancies and Newly Created Directorships

The disqualification provisions in Article III, Section 11 of the By-Laws would be revised to reflect that any determination to disqualify a director would be effective and result in a vacancy only if the GNC makes a recommendation for disqualification in addition to an affirmative vote for disqualification by a majority of the whole Board. The By-Laws currently provide that if a Member Director vacancy is filled by the Board, the person filling the vacancy will serve until the next scheduled election for the relevant class of Member Director and a successor is elected. However, if the term for that class of Member Director extends beyond the Board's next annual meeting the vacancy must be filled by a person who is recommended by the Nominating Committee. Proposed changes to these terms in respect of the GNC would require the Board in all cases to appoint a person who is recommended by the GNC. Similarly, Public Director vacancies would be required to be filled by the Board as generally provided for in Section 6A of

[12] A Clearing Member Organization is a Clearing Member that is a legal entity rather than a natural person.

[13] These changes would specify that, aside from the Class II Public Director who was elected to the Board at the 2011 annual meeting, two other Public Directors were appointed to the Board prior to its 2013 annual meeting, one designated as a Class I Public Director and the other designated as a Class III Public Director. Generally, the three year terms for Public Directors with staggered expiration for each class would be preserved; however, an exception would be added for the initial Class I and III Public Directors.

Article III of the By-Laws, including with regard to candidates being nominated by the GNC using OCC's fitness standards for directors. Provisions concerning filling vacancies with respect to the NC would be deleted, consistent with its elimination in favor of the GNC.

5. Ministerial Changes

The proposed changes to Article III of the By-Laws also include certain ministerial changes. A reference to stockholder exchanges in the interpretation and policy to Section 6 would be replaced by the defined term Equity Exchanges, and a reference in Section 14 to notice by telegram would be changed to facsimile to reflect current means of communication.

C. Proposed Amendments to the GC Charter Only

Certain of the proposed amendments relating to the creation of the GNC would apply only to OCC's existing GC Charter. These amendments are discussed below.

1. GNC Purpose

The statement of purpose in the GC Charter would be revised to reflect the GNC's larger scope of responsibilities. The existing GC purpose of reviewing the overall corporate governance of OCC would be maintained, along with language clarifying that this review would be performed on a regular basis and that recommendations concerning Board improvements should be made when necessary. The GNC Charter would also provide that the GNC assists the Board in identifying, screening and reviewing individuals qualified to serve as directors and by recommending candidates to the Board for nomination for election at the annual meeting of stockholders or to fill vacancies. The GNC Charter would also specify that the GNC would develop and recommend to the Board, and oversee the implementation of, a Board Code of Conduct.

2. GNC Membership and Organization

The requirement in the GC Charter that the GC hold four meetings annually would be modified to also permit the GNC to call additional meetings as it deems appropriate.[14] The GC Charter requirement for regular reporting to the Board on Committee activities by the GC chair or a designee would be revised in favor of placing the reporting responsibility solely on the GNC Chair and requiring the GNC Chair to make timely reports to the Board on important issues discussed at GNC meetings. Taking into consideration certain pre-established guidelines in the GNC Charter, the GNC Chair would also be given responsibility for determining whether minutes should be recorded at any executive session. Aside from this exception for executive sessions, GNC meeting minutes would be required to be recorded. The GNC Charter would also create a position to be filled by an OCC officer who would assist the GNC and liaise between it and OCC's staff.

3. GNC Authority

As in the case of the existing GC, the GNC would have authority to inquire into any matter relevant to its purpose and responsibilities in the course of carrying out its duties. The GNC Charter would further specify that in connection with any such inquiry the GNC would have access to all books, records, facilities and personnel of OCC. Unlike the existing GC Charter, the GNC Charter would not provide express authority for the GNC to rely on members of OCC's management for assistance. Instead, this relationship between the GNC and OCC's management would be more specifically addressed through the role of the newly created staff liaison position. Additional revisions to the GC Charter would also establish that the GNC Chair would not have discretion to take unilateral action on behalf of the Committee, even in special circumstances.

4. Board Composition

Without limiting the GNC to particular activities, the GNC Charter would specify certain responsibilities meant to guide the GNC in achieving its purposes, including with respect to its role in the development of the Board's composition. The GNC's Charter would require it to pursue development of a Board comprised of individuals who have a reputation for integrity and represent diverse professional backgrounds as well as a broad spectrum of experience and expertise. The GNC Charter would also prescribe more detailed responsibilities designed to further this goal. For example, the GNC would be required to conduct periodic reviews of the composition of the Board against the goal, including whether the Board reflects the appropriate balance of types of directors, business specialization, technical skills, diversity and other qualities.[15]

The GNC would be required to recommend policies and procedures to the Board for identifying and reviewing Board nominee candidates, and it would implement and oversee the effectiveness of those policies, including with regard to criteria for Board nominees. Using criteria approved by the Board, the GNC would identify, screen and review persons who it determines are qualified to serve as directors. This process would also extend to incumbent directors concerning any potential re-nomination. In all cases, the GNC would only recommend candidates to the Board for nomination for election after consulting with OCC's Executive Chairman.

In the event that a sitting director offers to resign because of a change in occupation or business association, the GNC would be responsible for reviewing whether continued service is appropriate and making a recommendation of any action, consistent with OCC's By-Laws and Rules, that should be taken by the Board. The GNC would also undertake periodic reviews of term limits for certain directors and recommend changes to these limits where appropriate.

5. Governance Practices

The GNC would have responsibility for reviewing the Board's Charter for consistency with regulatory requirements, transparency of the governance process and other sound governance practices. Currently, this is a GC function, and certain GC Charter amendments are proposed to help further detail the GNC's review responsibilities. These include a general responsibility to recommend changes, as the GNC deems appropriate, to the Board concerning Committee Charters. This would include the GNC Charter, which the GNC would be required to review annually.[16] In connection with a periodic review of Board Committee structure, the GNC would advise the Board regarding related matters of structure, operations and charters. Furthermore, and in each case after consultation with OCC's Executive Chairman, the GNC would recommend to the Board for its approval certain directors for Committee service as well as for assignment as Committee chair persons.

The GNC would develop and recommend to the Board the annual process used by the Board and Board Committees for self-evaluation of their

[14] This would bring the Governance and Nominating Committee Charter in line with the Charters of OCC's other Board Committees.

[15] The GNC would also review director conflicts of interest and the manner in which any such conflicts are to be monitored and resolved.

[16] As part of the annual review, the GNC would also submit the GNC Charter to the Board for re-approval, including any changes the GNC deems advisable.

role and performance in the governance of OCC. The GNC would also be responsible for coordinating and providing oversight of that process. Corporate governance principles applicable to OCC would be developed by the GNC for recommendation to the Board, and the GNC would review them at least once a year.

6. Other Proposed GC Charter Amendments

The GNC Charter would require the GNC to regularly evaluate its performance and the performance of its individual members and provide results of such assessments to the Board. It would also require an annual report to be prepared by the GNC and delivered to the Board regarding the GNC's activities for the preceding year, and the GNC would be required to include a statement that it carried out all of its GNC Charter responsibilities. In addition to such responsibilities, the GNC would generally be empowered to perform any other duties that it deems necessary or appropriate and consistent with the GNC Charter or as may otherwise be further delegated to it by the Board.

II. Discussion and Commission Findings

Although Title VIII does not specify a standard of review for an advance notice, the Commission believes that the stated purpose of Title VIII is instructive.[17] The stated purpose of Title VIII is to mitigate systemic risk in the financial system and promote financial stability by, among other things, promoting uniform risk management standards for systemically-important financial market utilities (''FMUs'') and strengthening the liquidity of systemically important FMUs.[18]

Section 805(a)(2) of the Clearing Supervision Act[19] authorizes the Commission to prescribe risk management standards for the payment, clearing, and settlement activities of designated clearing entities and financial institutions engaged in designated activities for which it is the supervisory agency or the appropriate financial regulator. Section 805(b) of the Clearing Supervision Act[20] states that the objectives and principles for the risk management standards prescribed under Section 805(a) shall be to:

- Promote robust risk management;
- promote safety and soundness;
- reduce systemic risks; and
- support the stability of the broader financial system.

The Commission has adopted risk management standards under Section 805(a)(2) of the Clearing Supervision Act[21] (''Clearing Agency Standards'').[22] The Clearing Agency Standards became effective on January 2, 2013 and require registered clearing agencies that perform central counterparty (''CCP'') services to establish, implement, maintain, and enforce written policies and procedures that are reasonably designed to meet certain minimum requirements for their operations and risk management practices on an ongoing basis.[23] As such, it is appropriate for the Commission to review advance notices against these Clearing Agency Standards and the objectives and principles of these risk management standards as described in Section 805(b) of the Clearing Supervision Act.[24]

The proposed changes in the Advance Notice may result in changes that will improve OCC's overall risk management process, and therefore may promote robust risk management. A Board-level committee likely will be in a better position to make well-informed nomination decisions. Members of the GNC will themselves be members of the Board, and, thus, have personal insight and experience into the types of experience and credentials that would be useful on the Board and be better able to assess the current needs of the Board. A Board comprised of Directors with more relevant skills and credentials that are better able to evaluate OCC's risks may promote more robust risk management.

Adding two Public Directors to the Board and eliminating the provision which ensured the number of Member Directors would outnumber the combined number of Exchange and Public Directors by one may also result in improved risk management processes and therefore may promote robust risk management. Additional emphasis on Public Directors may result in more independent views on the risks OCC presents being brought to the Board's attention for discussion and management of those risks. Moreover, the combined GNC and the additional emphasis on Public Directors should also aid in identifying any risks and inefficiencies in the current governance structure and making recommendations to the full Board to help mitigate those risks and eliminate any such inefficiencies.

The GNC's periodic reviews of the composition of the Board, including whether the Board reflects the appropriate balance of types of directors, business specialization, technical skills, diversity and other qualities, may help the GNC achieve balanced representation and a diversity among Member Directors. Maintaining balanced representation and having diversity among Member Directors may help the Board better evaluate and identify the risks OCC presents, and improve overall risk management.

In addition, the changes proposed in the Advance Notice may reduce OCC's contribution to systemic risk because they enhance the transparency of OCC's governance arrangements. The Commission believes that providing additional insight into OCC's governance arrangements may have this effect by allowing Members and other market participants to better assess risks at OCC, to comment on OCC's operations, and otherwise to advocate for improved overall risk management.

Commission Rule 17Ad–22(d)(8), adopted as part of Clearing Agency Standards, requires that a registered clearing agency establish, implement, maintain, and enforce written policies and procedures reasonably designed to ''have governance arrangements that are clear and transparent to fulfill the public interest requirements in Section 17A of the Exchange Act applicable to clearing agencies, to support the objectives of owners and participants, and to promote the effectiveness of the clearing agency's risk management procedures.''[25] The Commission believes that the changes proposed in this advance notice should help OCC fulfill these transparency requirements.

III. Conclusion

It is therefore noticed, pursuant to Section 806(e)(1)(I) of the Clearing Supervision Act,[26] that the Commission *does not object* to advance notice proposal (SR–OCC–2014–802) and that OCC is *authorized* to implement the proposal as of the date of this notice or the date of an order by the Commission

[17] *See* 12 U.S.C. 5461(b).

[18] *Id.*

[19] 12 U.S.C. 5464(a)(2).

[20] 12 U.S.C. 5464(b).

[21] 12 U.S.C. 5464(a)(2).

[22] Rule 17Ad–22, 17 CFR 240.17Ad–22. Exchange Act Release No. 68080 (October 22, 2012), 77 FR 66220 (November 2, 2012) (S7–08–11).

[23] The Clearing Agency Standards are substantially similar to the risk management standards established by the Board of Governors of the Federal Reserve System (''*Federal Reserve*'') governing the operations of designated DFMUs that are not clearing entities and financial institutions engaged in designated activities for which the Commission or the Commodity Futures Trading Commission is the Supervisory Agency. See Financial Market Utilities, 77 FR 45907 (August 2, 2012).

[24] 12 U.S.C. 5464(b).

[25] 17 CFR 240.17Ad–22(d)(8).

[26] 12 U.S.C. 5465(e)(1)(I).

approving a proposed rule change that reflects rule changes that are consistent with this advance notice proposal (SR–OCC–2014–09), whichever is later.

By the Commission.

Kevin O'Neill,

Deputy Secretary.

[FR Doc. 2014–16193 Filed 7–10–14; 8:45 am]

BILLING CODE 8011–01–P

SECURITIES AND EXCHANGE COMMISSION

[Release No. 34–72545; File No. SR–BOX–2014–19]

Self-Regulatory Organizations; BOX Options Exchange LLC; Notice of Filing and Immediate Effectiveness of a Proposed Rule Change to amend Interpretive Material to Rule 7150 (Price Improvement Period ''PIP'') and Interpretive Material to Rule 7245 (Complex Order Price Improvement Period ''COPIP'')

July 7, 2014.

Pursuant to Section 19(b)(1) of the Securities Exchange Act of 1934 (''Act''),[1] and Rule 19b–4 thereunder,[2] notice is hereby given that on July 1, 2014, BOX Options Exchange LLC (the ''Exchange'') filed with the Securities and Exchange Commission (''Commission'') the proposed rule change as described in Items I and II below, which Items have been prepared by the self-regulatory organization. The Commission is publishing this notice to solicit comments on the proposed rule from interested persons.

I. Self-Regulatory Organization's Statement of the Terms of Substance of the Proposed Rule Change

The Exchange proposes to amend Interpretive Material to Rule 7150 (Price Improvement Period ''PIP'') and Interpretive Material to Rule 7245 (Complex Order Price Improvement Period ''COPIP'') to extend the pilot programs that permit the Exchange to have no minimum size requirement for orders entered into the PIP (''PIP Pilot Program'') and COPIP (''COPIP Pilot Program''). The text of the proposed rule change is available from the principal office of the Exchange, at the Commission's Public Reference Room and also on the Exchange's Internet Web site at *http://boxexchange.com*.

[1] 15 U.S.C. 78s(b)(1).

[2] 17 CFR 240.19b–4.

II. Self-Regulatory Organization's Statement of the Purpose of, and Statutory Basis for, the Proposed Rule Change

In its filing with the Commission, the self-regulatory organization included statements concerning the purpose of, and basis for, the proposed rule change and discussed any comments it received on the proposed rule change. The text of these statements may be examined at the places specified in Item IV below. The self-regulatory organization has prepared summaries, set forth in Sections A, B, and C below, of the most significant aspects of such statements.

A. Self-Regulatory Organization's Statement of the Purpose of, and Statutory Basis for, the Proposed Rule Change

1. Purpose

The purpose of the proposed rule change is to extend the PIP and COPIP Pilot Programs for three additional months. The PIP and COPIP Pilot Programs allow the Exchange to have no minimum size requirement for orders entered into the PIP [3] and the COPIP.[4] The Exchange has committed to provide certain data to the Commission during the PIP and COPIP Pilot Programs.[5] The proposed rule change retains the text of IM–7150–1 to Rule 7150 and IM–7245–1 to Rule 7245; and seeks to extend the operation of the PIP and COPIP Pilot Programs until October 18, 2014.

The Exchange notes that the PIP and COPIP Pilot Programs guarantee Participants the right to trade with their customer orders that are less than 50 contracts. In particular, any order entered into the PIP is guaranteed an execution at the end of the auction at a price at least equal to the national best bid or offer. Any order entered into the COPIP is guaranteed an execution at the end of the auction at a price at least equal to or better than the cNBBO,[6] cBBO,[7] and BBO on the Complex Order Book for the Strategy at the time of commencement. In further support of this proposed rule change, the Exchange will submit to the Commission monthly a PIP Pilot Program Report and a COPIP Pilot Program Report, offering detailed data from, and analysis of, the PIP Pilot Program and COPIP Pilot Program.

The Exchange believes that, by extending the expiration of the PIP and COPIP Pilot Programs, the proposed rule change will allow for further analysis of the PIP and COPIP Pilot Programs and a determination of how the PIP and COPIP Pilot Programs shall be structured in the future.

2. Statutory Basis

The Exchange believes that the proposal is consistent with the requirements of Section 6(b) of the Act,[8] in general, and Section 6(b)(5) of the Act,[9] in particular, in that it is designed to foster cooperation and coordination with persons engaged in regulating, clearing, settling, processing information with respect to, and facilitating transactions in securities, to remove impediments to and perfect the mechanism for a free and open market and a national market system and, in general, to protect investors and the public interest. The Exchange believes that the data demonstrates that there is sufficient investor interest and demand to extend the PIP and COPIP Pilot Programs for an additional three months. The Exchange represents that the PIP and COPIP Pilot Programs are designed to create tighter markets and ensure that each order receives the best possible price.

B. Self-Regulatory Organization's Statement on Burden on Competition

The Exchange does not believe that the proposed rule change will impose any burden on competition not necessary or appropriate in furtherance of the purposes of the Act. Specifically, the Exchange believes that, by extending the expiration of the PIP and COPIP

[3] The Pilot Program is currently set to expire on July 18, 2014. *See* Securities Exchange Act Release Nos. 66871 (April 27, 2012) 77 FR 26323 (May 3, 2012) (File No.10–206, In the Matter of the Application of BOX Options Exchange LLC for Registration as a National Securities Exchange Findings, Opinion, and Order of the Commission), 67255 (June 26, 2012) 77 FR 39315 (July 2, 2013) (SR–BOX–2012–009) (Notice of Filing and Immediate Effectiveness of a Proposal To Extend a Pilot Program That Permits BOX to Have No Minimum Size Requirement for Orders Entered Into the Price Improvement Period), and 69846 (June 25, 2013) 78 FR 39365 (July 1, 2013) (SR–BOX–2013–33) (Notice of Filing and Immediate Effectiveness of a Proposal To Extend a Pilot Program That Permits BOX to Have No Minimum Size Requirement for Orders Entered Into the Price Improvement Period).

[4] The Pilot Program is currently set to expire on July 18, 2014. *See* Securities Exchange Act Release No. 71148 (December 19, 2013) 78 FR 78437 (December 26, 2013) (Notice of Filing of Amendment Nos. 1 and 2 and Order Granting Accelerated Approval of a Proposed Rule Change, as Modified by Amendment Nos. 1 and 2, to Permit Complex Orders to Participate in Price Improvement Periods).

[5] *See* supra note 3 at 26334 and note 4 at 78441.

[6] As defined in BOX Rule 7240(a)(3), the term ''cNBBO'' means the best net bid and offer price for a Complex Order Strategy based on the NBBO for the individual options components of such Strategy.

[7] As defined in BOX Rule 7240(a)(1), the term ''cBBO'' means the best net bid and offer price for a Complex Order Strategy based on the BBO on the BOX Book for the individual options components of such Strategy.

[8] 15 U.S.C. 78f(b).

[9] 15 U.S.C. 78f(b)(5).

Pilot Programs, the proposed rule change will allow for further analysis of the PIPP and COPIP Pilot Programs and a determination of how the PIP and COPIP Pilot Programs shall be structured in the future. In doing so, the proposed rule change will also serve to promote regulatory clarity and consistency, thereby reducing burdens on the marketplace and facilitating investor protection.

C. Self-Regulatory Organization's Statement on Comments on the Proposed Rule Change Received from Members, Participants, or Others

The Exchange has neither solicited nor received comments on the proposed rule change.

III. Date of Effectiveness of the Proposed Rule Change and Timing for Commission Action

Because the foregoing proposed rule change does not: (i) significantly affect the protection of investors or the public interest; (ii) impose any significant burden on competition; and (iii) become operative for 30 days from the date on which it was filed, or such shorter time as the Commission may designate, it has become effective pursuant to Section 19(b)(3)(A)(ii) of the Act [10] and subparagraph (f)(6) of Rule 19b–4 thereunder.[11]

A proposed rule change filed under Rule 19b–4(f)(6) [12] normally does not become operative for 30 days after the date of filing. However, pursuant to Rule 19b–4(f)(6)(iii) [13] the Commission may designate a shorter time if such action is consistent with the protection of investors and the public interest. The Exchange requested that the Commission waive the 30-day operative delay. The Exchange noted that such waiver will permit the PIP and COPIP Pilot Programs to continue without interruption.

The Commission believes that waiving the 30-day operative delay is consistent with the protection of investors and the public interest, as it will allow the pilot program to continue uninterrupted, thereby avoiding any potential investor confusion that could result from a temporary interruption in the pilot program. Further, the Commission notes that, because the filing was submitted for immediate effectiveness on July 1, 2014, the fact that the current rule provision does not expire until July 18, 2014 will afford interested parties the opportunity to comment on the proposal before the Exchange requires it to become operative. For this reason, the Commission designates the proposed rule change to be operative on July 18, 2014.[14]

At any time within 60 days of the filing of the proposed rule change, the Commission summarily may temporarily suspend such rule change if it appears to the Commission that such action is necessary or appropriate in the public interest, for the protection of investors, or otherwise in furtherance of the purposes of the Act.

IV. Solicitation of Comments

Interested persons are invited to submit written data, views, and arguments concerning the foregoing, including whether the proposed rule change is consistent with the Act. Comments may be submitted by any of the following methods:

Electronic Comments

- Use the Commission's Internet comment form (*http://www.sec.gov/rules/sro.shtml*); or
- Send an email to *rule-comments@sec.gov.* Please include File Number SR–BOX–2014–19 on the subject line.

Paper Comments

- Send paper comments in triplicate to Secretary, Securities and Exchange Commission, 100 F Street NE., Washington, DC 20549–1090.

All submissions should refer to File Number SR–BOX–2014–19. This file number should be included on the subject line if email is used. To help the Commission process and review your comments more efficiently, please use only one method. The Commission will post all comments on the Commission's Internet Web site (*http://www.sec.gov/rules/sro.shtml*). Copies of the submission, all subsequent amendments, all written statements with respect to the proposed rule change that are filed with the Commission, and all written communications relating to the proposed rule change between the Commission and any person, other than those that may be withheld from the public in accordance with the provisions of 5 U.S.C. 552, will be available for Web site viewing and printing in the Commission's Public Reference Room, 100 F Street NE., Washington, DC 20549, on official business days between the hours of 10:00 a.m. and 3:00 p.m. Copies of such filing also will be available for inspection and copying at the principal office of the Exchange. All comments received will be posted without change; the Commission does not edit personal identifying information from submissions. You should submit only information that you wish to make available publicly. All submissions should refer to File Number SR–BOX–2014–19 and should be submitted on or before August 1, 2014.

For the Commission, by the Division of Trading and Markets, pursuant to delegated authority.[15]

Kevin M. O'Neill,

Deputy Secretary.

[FR Doc. 2014–16188 Filed 7–10–14; 8:45 am]

BILLING CODE 8011–01–P

[10] 15 U.S.C. 78s(b)(3)(A)(ii).

[11] 17 CFR 240.19b–4(f)(6). In addition, Rule 19b–4(f)(6) requires the Exchange to give the Commission written notice of the Exchange's intent to file the proposed rule change along with a brief description and text of the proposed rule change, at least five business days prior to the date of filing of the proposed rule change, or such shorter time as designated by the Commission. The Exchange has met this requirement.

[12] 17 CFR 240.19b–4(f)(6).

[13] 17 CFR 240.19b–4(f)(6)(iii).

[14] For purposes only of waiving the operative delay, the Commission has considered the proposed rule's impact on efficiency, competition, and capital formation. *See* 15 U.S.C. 78c(f).

[15] 17 CFR 200.30–3(a)(12).

SECURITIES AND EXCHANGE COMMISSION

[Release No. 34–72548; File No. SR–NYSE–2014–32]

Self-Regulatory Organizations; New York Stock Exchange LLC; Notice of Filing of Proposed Rule Change Amending Rule 13 to Make the Add Liquidity Only Modifier Available for Additional Limit Orders and Make the Day Time-In-Force Condition Available for Intermarket Sweep Orders

July 7, 2014.

Pursuant to Section 19(b)(1) [1] of the Securities Exchange Act of 1934 (''Act'') [2] and Rule 19b–4 thereunder,[3] notice is hereby given that on June 27, 2014, New York Stock Exchange LLC (''NYSE'' or ''Exchange'') filed with the Securities and Exchange Commission (''Commission'') the proposed rule change as described in Items I and II below, which Items have been prepared by the self-regulatory organization. The Commission is publishing this notice to solicit comments on the proposed rule change from interested persons.

I. Self-Regulatory Organization's Statement of the Terms of Substance of the Proposed Rule Change

The Exchange proposes to amend NYSE Rule 13 to make the Add Liquidity Only (''ALO'') modifier

[1] 15 U.S.C. 78s(b)(1).

[2] 15 U.S.C. 78a.

[3] 17 CFR 240.19b–4.

available for additional limit orders and make the day time-in-force condition available for Intermarket Sweep Orders (''ISO''). The text of the proposed rule change is available on the Exchange's Web site at *www.nyse.com,* at the principal office of the Exchange, and at the Commission's Public Reference Room.

II. Self-Regulatory Organization's Statement of the Purpose of, and Statutory Basis for, the Proposed Rule Change

In its filing with the Commission, the self-regulatory organization included statements concerning the purpose of, and basis for, the proposed rule change and discussed any comments it received on the proposed rule change. The text of those statements may be examined at the places specified in Item IV below. The Exchange has prepared summaries, set forth in sections A, B and C below, of the most significant parts of such statements.

(A) Self-Regulatory Organization's Statement of the Purpose of, and Statutory Basis for, the Proposed Rule Change

1. Purpose

The Exchange is proposing to amend NYSE Rule 13 to make the ALO modifier available for additional limit orders and make the day time-in-force condition available for ISOs.

ALO Modifier

The Exchange currently offers an ALO modifier for MPL Orders, which are undisplayed limit orders that execute at the mid-point of the protected best bid or offer (''PBBO'').[4] Pursuant to paragraph (e) governing MPL Orders in Rule 13, an MPL–ALO Order will not execute upon arrival, even if marketable. The Exchange proposes to amend Rule 13 to make the ALO modifier available for day limit orders. The Exchange notes that all other equity exchanges already make available add-liquidity-only functionality for limit orders.[5]

To effect this change, the Exchange proposes to adopt a definition of ALO Modifier in Rule 13. Proposed paragraph (a) of this new definition would describe how an ALO Modifier impacts an order to which it is appended, which is the same functionality as the ALO modifier currently available for MPL Orders. Specifically, an order designated ALO does not route and will not remove liquidity from the Exchange's book. Proposed paragraph (a) of the new definition would also state that ALO modifiers are available for MPL Orders, as they are today, and for day limit orders.[6] Because the behavior of MPL–ALO Orders is currently described in paragraph (e) for MPL Orders in Rule 13, the Exchange further proposes to cross-reference that rule text in the new definition for ALO Modifiers. Accordingly, the remainder of the proposed definition for ALO Modifier would describe the behavior of limit orders designated ALO.

The Exchange further proposes in new paragraph (a) of the new definition that limit orders designated ALO would be eligible to participate in the open or close, which would include Limit on Open or Limit on Close Orders, but that the ALO designation would be ignored. The Exchange's opening and closing transactions are single-priced auction transactions and the Exchange does not consider either side of the transaction to be either a ''provider'' or a ''taker.'' Accordingly, an ALO modifier is moot for the open or close. In order to enable as much interest as possible to participate in the open or close, the Exchange proposes to include any limit orders designated ALO in these auctions, but to ignore the ALO designation.

To promote the display of liquidity, the Exchange further proposes that a limit order designated ALO must be entered with a minimum of one displayable round lot. Accordingly, the ALO Modifier would be available for Minimum Display Reserve Orders (Rule 13) and Minimum Display Reserve e-Quotes (Rule 70(f)(1)). The Exchange would reject incoming limit orders designated ALO that do not meet the minimum display requirement, including odd-lot sized orders designated ALO.

The Exchange proposes to specify in paragraph (c) to the new rule text that the following interest may not be designated ALO: (1) DMM interest entered via the Capital Commitment Schedule pursuant to Rule 1000; (2) d-Quotes, as defined in Rule 70.25; (3) Sell ''Plus''–Buy ''Minus'' Orders as defined in Rule 13; (4) Non-Display Reserve Orders, as defined in Rule 13, or Non-Display Reserve e-Quotes, as defined in Rule 70(f)(ii); (5) Retail Orders or Retail Price Improvement Orders, as defined in Rule 107C; or (6) High-priced securities, as defined in Rule 1000(a)(vi).

To assure that a limit order designated ALO meets its goal to be available on the Exchange's book to add liquidity to arriving orders, the Exchange proposes to re-price a limit order designated ALO that upon arrival would be marketable against Exchange interest or would lock or cross a protected quotation in violation of Rule 610(d) of Regulation NMS.[7] Accordingly, the Exchange proposes to specify in paragraph (b) to the rule text for ALO Modifiers that if, at the time of entry, a limit order designated ALO is marketable against Exchange interest or would lock or cross a protected quotation in violation of Rule 610(d) of Regulation NMS, the order would be re-priced and displayed one minimum price variation, as defined in supplementary material .10 to Rule 62, below the best-priced sell interest (for bids) or above the best-priced buy interest (for offers). The Exchange notes that re-pricing a limit order designated ALO so that it would not execute against resting Exchange interest or lock or cross a protected quotation is consistent with how other equities markets currently operate.[8]

The Exchange proposes to use the term ''Exchange interest'' in the proposed rule text in order to include both displayed interest and non-displayed interest (i.e., Non-Displayed Reserve Orders or odd-lot sized orders), which may be priced better than the displayed quote. In addition, the Exchange proposes to add new Supplementary Material .10 to Rule 13 to define new terms to capture the best price among Exchange displayed and non-displayed interest and the best away protected quote. As proposed, the term ''best-priced sell interest'' would refer to the lowest-priced sell interest against which incoming buy interest

[4] *See* Rule 13 (Mid-Point Passive Liquidity (MPL) Order).

[5] *See* BATS Exchange, Inc. (''BATS'') Rule 11.9(c)(6) (''BATS Post Only Order''); BATS Y-Exchange, Inc. (''BATS–Y'') Rule 11.9(c)(6) (''BATS Post Only Order''); Chicago Stock Exchange, Inc. (''CHX'') Article 20, Rule 4(b)(18) (''Post Only''); EDGA Exchange, Inc. (''EDGA'') Rule 11.5(c)(5) (''Post Only Order''); EDGX Exchange, Inc. (''EDGX'') Rule 11.5(c)(5) (''Post Only Order''); NASDAQ Stock Market LLC (''Nasdaq'') Rule 4751(f)(10) (''Post-Only Orders''); NASDAQ OMX BX LLC (''Nasdaq OMX BX'') Rule 4751(f)(10) (''Post-Only Orders''); NASDAQ OMX PHLX LLC (''Nasdaq OMX PSX'') Rule 3301(f)(11) (''Post-Only Orders''); and NYSE Arca Equities, Inc. (''NYSE Arca Equities'') Rule 7.31(nn).

[6] Pursuant to Rule 13, a ''Limit, Limited Order, or Limited Price Order'' means an order to buy or sell a stated amount of a security at a specified price, or at a better price, if obtainable and a ''Day Order'' means an order to buy or sell which, if not executed, expires at the end of the 9:30 a.m. to 4:00 p.m. trading session on the day on which it was entered.

[7] 17 CFR 242.610(d).

[8] *See* BATS Rules 11.9(c)(6) and 11.9(g)(2)(D); BATS–Y Rules 11.9(c)(6) and 11.9(g)(2)(D); CHX Article 20, Rule 4(b)(25 (''CHX Only''); EDGA Rule 11.5(c)(5); EDGX Rule 11.5(c)(5); Nasdaq Rule 4751(f)(10); and NYSE Arca Equities Rule 7.31(mm) (PNP Blind order combined with an ALO order).

would be required to execute with and/or route to, including Exchange displayed offers, Non-Display Reserve Orders, Non-Display Reserve e-Quotes, odd-lot sized sell interest, and protected offers on away markets, but would not include non-displayed interest that is priced based on the PBBO, such as MPL Orders or Retail Price Improvement Orders (''RPI''). The term ''best-priced buy interest'' would refer to the highest-priced buy interest against which incoming sell interest would be required to execute with and/or route to, including Exchange displayed bids, Non-Display Reserve Orders, Non-Display Reserve e-Quotes, odd-lot sized buy interest, and protected bids on away markets, but would not include non-displayed interest that is priced based on the PBBO, such as MPL Orders or RPIs. The Exchange believes it is appropriate to exclude MPL Orders from the definition of best-priced sell/buy interest because the price at which an MPL Order is eligible to execute changes as the PBBO moves.

As further proposed, if the best-priced sell interest is re-priced higher, an order to buy designated ALO would be re-priced and re-displayed higher, up to its limit price. If the best-priced buy interest is re-priced lower, an order to sell designated ALO would be re-priced and re-displayed lower, down to its limit price. The Exchange believes that re-pricing and re-displaying limit orders designated ALO each time the best-priced sell interest is priced higher (for bids) or the best-priced buy interest is priced lower (for offers) would ensure that the order is displayed at its most aggressive price without requiring the order to either take liquidity or lock or cross a protected quotation.

In addition, as proposed, a limit order designated ALO would not be re-priced if it is displayed at its limit price or if the best-priced sell interest moves down in price (for limit orders to buy designated ALO) or if the best-priced buy interest moves up in price (for limit orders to sell designated ALO). Once an order reaches its limit price, the Exchange would no longer need to re-price it. The Exchange also would not need to re-price a limit order designated ALO if the best-priced sell interest moves down (for bids) or the best-priced buy interest moves up (for offers) because in such scenario, the limit order designated ALO would have been displayed first at that price and the opposite-side bid or offer would be required to execute with or route to the resting limit order designated ALO.

For example, assume the Exchange best bid and offer (''BBO'') in XYZ is 10.05 × 10.11, the PBBO is 10.05 × 10.09, and the Exchange has a non-displayed odd-lot sell order priced at 10.07. In this scenario, the best-priced sell interest, as defined in new supplementary material .10 to Rule 13, would be 10.07. Accordingly, if the Exchange were to receive a limit order to buy designated ALO at 10.12 (''Order A''), the Exchange would re-price and display Order A at $10.06, which is one MPV below the 10.07 best-priced sell interest.

Assume now that the resting odd-lot order to sell on the Exchange is either executed or cancelled, but the Exchange best offer and PBO does not change. Because the new best-priced sell interest is the away-market PBO of 10.09, Order A would re-price and re-display to 10.08, which is one MPV below the updated best-priced sell interest.

Assume further that the market updates so that both the Exchange's BBO and the PBBO update to 10.08–10.14 and there is no undisplayed interest to sell at the Exchange. Order A would be re-priced and re-displayed at its limit price of 10.12. At this point, because it has been displayed at its limit price, Order A would not be subject to any further re-pricing. If the Exchange were to receive incoming sell interest marketable against Order A, Order A would be available liquidity to execute against that incoming sell interest.

As further proposed, a limit order designated ALO would receive a new time stamp each time it is re-priced and re-displayed. The Exchange believes that providing a new time stamp each time a limit order designated ALO is re-priced and re-displayed is consistent with current Exchange rules that provide that an order that is modified to change the price of the order shall receive a new time stamp.[9]

As noted above, limit orders designated ALO would not be priced based on resting opposite-side MPL Orders, which are triggered to trade at the midpoint of the PBBO by arriving interest. To assure that limit orders designated ALO would not trigger an opposite-side MPL Order to trade, the Exchange proposes to add new paragraph (d) governing ALO Modifiers in Rule 13 to specify that a limit order designated ALO would not trigger a contra-side MPL Order to trade. The Exchange proposes to make a conforming change to paragraph (a) governing MPL Orders in Rule 13 to specify that an incoming limit order designated ALO would not interact with an MPL Order.

For example, assume the Exchange BBO and PBBO in XYZ is 10.05–10.09 and there is a sell MPL Order eligible to execute at the midpoint of the PBBO, which would be 10.07. Assume further that the Exchange also has a Non-Display Reserve Order to sell priced at 10.08. In this scenario, an incoming buy order designated ALO priced at 10.11 (''Order B'') would re-price and display one MPV below the best-priced sell interest, which is 10.08. Accordingly, Order B would display at 10.07. Although the new 10.07 bid is at the same price that the resting MPL Order could have executed when the PBBO was 10.05 x 10.09, because the new bid updates the PBBO to 10.07 x 10.09, the MPL Order is now eligible to execute at 10.08 and no longer at 10.07.

Because pegging interest may be designated ALO, the Exchange proposes to amend the rules governing pegging interest in Rule 13 to take into consideration how an ALO Modifier would function with pegging interest. As proposed in paragraph (c) governing pegging interest in Rule 13, pegging interest to buy (sell) that is designated ALO would not peg to a price that would result in its executing before displaying and shall instead peg one minimum price variation below (above) the undisplayed Exchange sell (buy) interest against which it would have otherwise executed. For example, assume the Exchange BBO is 10.05 x 10.10 and the PBBO is 10.08 x 10.10 and the Exchange has sell odd-lot interest priced at 10.08. Assume further incoming pegging interest to buy designated ALO with a limit of 10.10 arrives (''Order C''). If Order C were not designated ALO, it would peg to the PBB of 10.08 and execute against the resting odd-lot interest, and any remainder would be displayed at 10.08. As proposed, with the ALO designation, to assure that Order C would not execute on arrival, it would peg to a price one MPV below the 10.08 odd-lot sell interest and display at 10.07.

Day Time-in-Force Designation for ISOs

An ISO is currently defined in Rule 13 as a limit order designated for automatic execution that meets the following requirements: (i) It is identified as an ISO in the manner prescribed by the Exchange; and (ii) simultaneously with the routing of an ISO to the Exchange, one or more additional limit orders, as necessary, are routed to execute against the full displayed size of any protected bid, in the case of a limit order to sell, or the full displayed size of any protected offer, in the case of a limit order to buy and these additional orders are identified as ISOs. This definition is based on the definition of an ISO set

[9] *See* Rule 72(xii).

forth in Regulation NMS Rule 600(b)(30),[10] and is consistent with similar provisions on other exchanges.[11]

Currently, the Exchange immediately and automatically executes an ISO upon arrival and the portion not so executed will be immediately and automatically cancelled.[12] Accordingly, the Exchange treats all ISOs with an immediate-or-cancel time-in-force condition.

Other equities exchanges do not limit their ISOs to an immediate-or-cancel time-in-force condition.[13] Accordingly, the Exchange proposes to amend Rule 13 governing ISOs to make available an ISO Order with a day time-in-force condition. As proposed, an ISO designated day (''Day ISO''), if marketable upon arrival, would be immediately and automatically executed against the displayed bid (offer) up to its full size in accordance with and to the extent provided by Exchange Rules 1000–1004 and would then sweep the Display Book,® as provided in Rule 1000(d)(iii). This proposed rule text is consistent with current paragraph (b) governing ISOs in Rule 13.

The Exchange further proposes to provide that the remaining unexecuted portion of a Day ISO would be posted to the Exchange's book at its limit price and may lock or cross a protected quotation that was displayed at the time of arrival of the Day ISO. The Exchange believes this proposed rule text is consistent with Regulation NMS and the rules of other exchanges because the member organization that sent the Day ISO to the Exchange has an existing obligation (pursuant to paragraph (a)(ii) governing ISOs in Rule 13) to simultaneously route ISOs to trade with the full size of protected quotations on other markets.[14] Accordingly, the Exchange would consider any protected quotes that existed at the time of arrival of the Day ISO as cleared when it posts any remainder of a Day ISO to the Exchange's book.[15]

The Exchange further proposes that a Day ISO must be entered with a minimum of one displayable round lot. Accordingly, similar to the proposed ALO Modifier for limit orders, Day ISOs would be available for Minimum Display Reserve Orders and Minimum Display Reserve e-Quotes. The Exchange also proposes that a Day ISO may also be designated ALO.

Because Day ISOs would not route, which is similar to the proposed ALO Modifier functionality, the Exchange proposes to re-price and re-display resting Day ISOs in a manner consistent with the proposed re-pricing and re-displaying functionality described above for limit orders designated ALO. As proposed, if, after posting, a Day ISO would lock or cross a protected quotation, the Exchange would re-price and re-display the order consistent with proposed paragraph (b) for ALO Modifiers in Rule 13. Accordingly, any such re-pricing would be based on the best-priced sell interest (for bids) or best-priced buy interest (for offers), as proposed in new Supplementary Material .10 to Rule 13.

The Exchange further proposes that a Day ISO designated ALO that is marketable upon arrival would follow a combination of both the Day ISO and ALO rules. Specifically, the Day ISO element of this order would be permitted to trade through away market protected quotations on arrival and lock or cross a protected quotation. In addition, the ALO element would require that this order not result in taking liquidity. Accordingly, the Exchange proposes that if a Day ISO designated ALO is marketable against Exchange interest on arrival, it would be re-priced and displayed one minimum price variation, as defined in supplementary material .10 to Rule 62, below the Exchange's best-priced displayed or non-displayed non-MPL Order sell interest (for bids) or above the best-priced Exchange displayed or non-displayed non-MPL Order buy interest (for offers). Any re-pricing and display on arrival would ignore away-market protected quotations. As further proposed, once a Day ISO designated ALO has been posted to the Exchange's book, to assure that any subsequent re-pricing and re-displaying of a Day ISO designated ALO does not lock or cross a protected quotation, the Exchange proposes to follow the re-pricing rule set forth in proposed paragraph (b) for ALO Modifiers in this Rule. Therefore, any subsequent re-pricing would be based on the best-priced sell interest (for bids) or best-priced buy interest (for offers), as proposed in new Supplementary Material .10 to Rule 13.

For example, assume the BBO in XYZ is 10.05 x 10.11, the PBBO is 10.05 x 10.09, and the Exchange has a resting odd-lot order to sell priced at 10.07. In this scenario, the best-priced sell interest, as defined in new supplementary material .10 to Rule 13, would be 10.07. If the Exchange were to receive a Day ISO to buy at 10.12 (''Order D''), the Exchange would execute Order D against the resting odd-lot order to sell at 10.07, ignore the best protected offer of 10.09, and execute against the Exchange's best offer of 10.11. If there were any remaining quantity of Order D, it would post at 10.12. Although this 10.12 bid would cross the 10.09 PBO, the Exchange would consider that 10.09 PBO cleared pursuant to the existing obligation for the entering firm to have sent an ISO to trade with the full size of that PBO simultaneous with entering Order D at the Exchange.

Assume instead that the Day ISO to buy at 10.12 is also designated ALO (''Order E''). In this scenario, upon arrival, Order E would be re-priced and displayed at 10.06, which is one MPV below the Exchange's best priced non-displayed interest. Assume instead that the Exchange receives a Day ISO designated ALO to buy at 10.12 (''Order F''), but that when Order F arrives, the BBO is 10.05 x 10.11, the PBBO is 10.05 × 10.09, and the Exchange has no non-displayed sell interest. In this scenario, the Exchange would ignore the 10.09 PBO and Order F would be re-priced and displayed at 10.10, which is one MPV below the Exchange's best-priced displayed offer of 10.11. Assume the market updates and the BBO becomes 10.10 x 10.14 and the PBBO is 10.10 x 10.12. Order F would re-price and re-display one MPV below the best-priced sell interest, which here would be the 10.12 PBO. Accordingly, Order F would re-price and re-display at 10.11.

The Exchange also proposes to add new paragraph (e) governing ISOs in Rule 13 to specify that IOC ISOs and Day ISOs are not available for Sell ''Plus''—Buy ''Minus'' Orders or Non-Display Reserve Orders or Non-Display Reserve e-Quotes, and that IOC ISOs are not available for high-priced securities, as defined in Rule 1000(a)(vi).

Finally, the Exchange proposes non-substantive changes to paragraph (a)

[10] 17 CFR 242.600(b)(30).

[11] *See* BATS Rule 11.9(d); BATS–Y Rule 11.9(d); CHX Article 20, Rule 4(b)(1) and (15); EDGA Rule 11.5(d); EDGX Rule 11.5(d); Nasdaq Rule 4751(f)(6); Nasdaq OMX BX Rule 4751(f)(6); Nasdaq OMX PSX Rule 3301(f)(6); and NYSE Arca Equities Rule 7.31(jj).

[12] *See* paragraph (b) governing ISOs in Rule 13.

[13] The rules of Nasdaq, BATS, BATS–Y, EDGA, and EDGX do not expressly provide that their versions of ISOs can be day, however, nor do their rules prohibit this functionality. In practice, Nasdaq, BATS, BATS–Y EDGA, and EDGX all accept ISOs with a day time-in-force condition. In addition, NYSE Arca Equities expressly permits an ISO with a day time-in-force condition, which is entered as a Post No Preference (''PNP'') Order. *See, e.g.,* NYSE Arca Equities Rule 7.31(w) (PNP Order designated ISO does not route and may lock and cross and trade through protected quotations). *See also* Securities Exchange Act Release No. 34–54549 (Sept. 29, 2006), 71 FR 59179 (Oct. 6, 2006) (SR–NYSEArca–2006–59) (Order approving NYSE Arca Equities' proposal to adopt ISO PNP Orders, which post to NYSE's Arca book and may lock or cross protected quotations). *See also* CHX Article 20, Rules 4(b)(1) and (23).

[14] *See supra* n. 11.

[15] *See supra* n. 13.

defining ISOs to provide more detail regarding the current operation of ISOs, consistent with existing NYSE Arca Rule 7.31(jj). As proposed, the Exchange would define an ISO as a limit order designated for automatic execution in a particular security that is never routed to an away market, may trade through a protected bid or offer, and will not be rejected or cancelled if it would lock, cross, or be marketable against an away market provided that it meets the requirements described in the rule. The Exchange also proposes to make non-substantive, technical amendments to define the term ''Intermarket Sweep Order'' as ''ISO'' and change references from ''Intermarket Sweep Order'' to ''ISO.'' The Exchange further proposes a non-substantive, technical change to define the existing form of an ISO as an ''ISO designated IOC ('IOC ISO').''

Because of the technology changes associated with this proposed rule change, the Exchange proposes to announce the implementation date of ALO Modifiers for day limit orders and Day ISOs by Trader Update.

2. Statutory Basis

The proposed rule change is consistent with Section 6(b) [16] of the Act, in general, and furthers the objectives of Section 6(b)(5),[17] in particular, in that it is designed to promote just and equitable principles of trade, remove impediments to and perfect the mechanism of a free and open market and a national market system and, in general, to protect investors and the public interest.

The Exchange believes that the proposal is designed to remove impediments to and perfect the mechanism of a free and open market and a national market system because the expansion of the availability of ALO Modifiers for day limit orders will increase competition, not only among market participants, but also among exchanges offering similar functionality. Specifically, all other equity exchanges currently enable member firms to enter limit orders that would only post on the designated exchange and not route.[18] The Exchange proposes to expand its existing ALO functionality, consistent with other markets, to also make it available for limit orders. The Exchange believes that requiring limit orders designated ALO to be entered with a minimum display quantity will help perfect the mechanism of a free and open market by encouraging additional displayed liquidity on a public registered exchange, and therefore promote price discovery. The Exchange further believes that the proposed re-pricing and re-displaying of a limit order designated ALO removes impediments to and perfects the mechanism of a free and open market because it assures that such an order would meet its intended goal to be available on the Exchange's book as displayed liquidity without locking or crossing a protected quotation in violation of Rule 610(d) of Regulation NMS.[19] The Exchange further notes that the proposed re-pricing and re-displaying of limit orders designated ALO is consistent with how other exchanges currently operate.[20]

The Exchange also believes that adding a day time-in-force condition for ISOs, an existing order type on the Exchange, is designed to remove impediments to and perfect the mechanism of a free and open market and national market system because the proposed expansion is consistent with the definition of an ISO under Regulation NMS [21] and with the operation of how ISOs may be entered on other exchanges, including that it may trade through protected quotations on arrival and display on the Exchange at a price that may lock or cross a protected quotation.[22] The Exchange further believes that any subsequent re-pricing and re-displaying of a Day ISO after it has posted on the Book will meet the entering firm's expectations that a Day ISO order not route, while at the same time ensure that it would not lock or cross a protected quotation in violation of Rule 610(d) of Regulation NMS.[23]

(B) Self-Regulatory Organization's Statement on Burden on Competition

The Exchange does not believe that the proposed rule change will impose any burden on competition that is not necessary or appropriate in furtherance of the purposes of the Act. Rather, the Exchange believes that the proposed rule change is pro-competitive because it expands the functionality associated with existing NYSE order types to conform to how these order types already operate on other exchanges, thereby harmonizing the forms of order types available for market participants that trade on equity exchanges.[24]

(C) Self-Regulatory Organization's Statement on Comments on the Proposed Rule Change Received From Members, Participants or Others

No written comments were solicited or received with respect to the proposed rule change.

III. Date of Effectiveness of the Proposed Rule Change and Timing for Commission Action

Within 45 days of the date of publication of this notice in the **Federal Register** or within such longer period up to 90 days (i) as the Commission may designate if it finds such longer period to be appropriate and publishes its reasons for so finding or (ii) as to which the self-regulatory organization consents, the Commission will:

(A) By order approve or disapprove such proposed rule change, or

(B) institute proceedings to determine whether the proposed rule change should be disapproved.

IV. Solicitation of Comments

Interested persons are invited to submit written data, views, and arguments concerning the foregoing, including whether the proposed rule change is consistent with the Act. Comments may be submitted by any of the following methods:

Electronic Comments

- Use the Commission's Internet comment form (*http://www.sec.gov/rules/sro.shtml*) or

Send an email to *rule-comments@sec.gov*. Please include File Number SR–NYSE–2014–32 on the subject line.

Paper Comments

- Send paper comments in triplicate to Secretary, Securities and Exchange Commission, 100 F Street NE., Washington, DC 20549–1090.

All submissions should refer to File Number SR–NYSE–2014–32. This file number should be included on the subject line if email is used. To help the Commission process and review your comments more efficiently, please use only one method. The Commission will post all comments on the Commission's Internet Web site (*http://www.sec.gov/rules/sro.shtml*). Copies of the submission, all subsequent amendments, all written statements

[16] 15 U.S.C. 78f(b).

[17] 15 U.S.C. 78f(b)(5).

[18] *See supra* n. 5.

[19] 17 CFR 242.610(d).

[20] *See supra* n. 8.

[21] 17 CFR 242.600(b)(3) and *supra* n. 11.

[22] *See supra* n. 13, 71 FR at 59181 (''If an ISO is not marked as 'immediate or cancel,' any remaining balance in the order would be displayed by the Exchange without regard to whether that display would lock or cross another market center, only if the participant routing the order has already sent an order to satisfy the quotations of other markets so that the display of the order would not lock or cross those markets.'') and at 59182 (approving, among other things, NYSE Arca's proposed ISO order type and finding that it is consistent with the Act).

[23] 17 CFR 242.610(d).

[24] *See supra,* nn. 5, 11, and 13.

with respect to the proposed rule change that are filed with the Commission, and all written communications relating to the proposed rule change between the Commission and any person, other than those that may be withheld from the public in accordance with the provisions of 5 U.S.C. 552, will be available for Web site viewing and printing in the Commission's Public Reference Room, 100 F Street NE., Washington, DC 20549, on official business days between the hours of 10:00 a.m. and 3:00 p.m. Copies of such filing also will be available for inspection and copying at the NYSE's principal office and on its Internet Web site at *www.nyse.com.* All comments received will be posted without change; the Commission does not edit personal identifying information from submissions. You should submit only information that you wish to make available publicly. All submissions should refer to File Number SR–NYSE–2014–32 and should be submitted on or before August 1, 2014.

For the Commission, by the Division of Trading and Markets, pursuant to delegated authority.[25]

Kevin M. O'Neill,

Deputy Secretary.

[FR Doc. 2014–16191 Filed 7–10–14; 8:45 am]

BILLING CODE 8011–01–P

[25] 17 CFR 200.30–3(a)(12).

SUSQUEHANNA RIVER BASIN COMMISSION

Public Hearing; Susquehanna River Basin Commission

AGENCY: Susquehanna River Basin Commission.

ACTION: Notice.

SUMMARY: The Susquehanna River Basin Commission will hold a public hearing on August 7, 2014, in Harrisburg, Pennsylvania. At this public hearing, the Commission will hear testimony on the projects listed in the Supplementary Information section of this notice. Such projects are intended to be scheduled for Commission action at its next business meeting, tentatively scheduled for September 4, 2014, which will be noticed separately. The public should take note that this public hearing will be the only opportunity to offer oral comment to the Commission for the listed projects. The deadline for the submission of written comments is August 18, 2014.

DATES: The public hearing will convene on August 7, 2014, at 2:30 p.m. The public hearing will end at 5:00 p.m. or at the conclusion of public testimony, whichever is sooner. The deadline for the submission of written comments is August 18, 2014.

ADDRESSES: The public hearing will be conducted at the Pennsylvania State Capitol, Room 8E–B, East Wing, Commonwealth Avenue, Harrisburg, Pa.

FOR FURTHER INFORMATION CONTACT: Jason Oyler, Regulatory Counsel, telephone: (717) 238–0423, ext. 1312; fax: (717) 238–2436. Information concerning the applications for these projects is available at the SRBC Water Resource Portal at *www.srbc.net/wrp.* Materials and supporting documents are available to inspect and copy in accordance with the Commission's Access to Records Policy at *www.srbc.net/pubinfo/docs/2009-02%20Access%20to%20Records%20Policy%209-10-09.PDF.*

SUPPLEMENTARY INFORMATION: The public hearing will cover the following projects:

Public Hearing—Projects Scheduled for Action

1. Project Sponsor and Facility: City of Aberdeen, Harford County, Md. Modification to extend the approval term of the surface water withdrawal approval (Docket No. 20021210) to be coterminous with the revised Maryland Department of the Environment State Water Appropriation and Use Permit for the Aberdeen Proving Ground-Aberdeen Area.

2. Project Sponsor and Facility: City of Aberdeen, Harford County, Md. Modification to extend the approval term of the consumptive water use approval (Docket No. 20021210) to be coterminous with the revised Maryland Department of the Environment State Water Appropriation and Use Permit for the Aberdeen Proving Ground-Aberdeen Area.

3. Project Sponsor and Facility: Anadarko E&P Onshore LLC (Lycoming Creek), McIntyre Township, Lycoming County, Pa. Application for surface water withdrawal of up to 0.499 mgd (peak day).

4. Project Sponsor and Facility: Anadarko E&P Onshore LLC (Pine Creek), McHenry Township, Lycoming County, Pa. Application for renewal of surface water withdrawal of up to 0.499 mgd (peak day) (Docket No. 20100902).

5. Project Sponsor and Facility: Cabot Oil & Gas Corporation (Tunkhannock Creek), Nicholson Township, Wyoming County, Pa. Application for surface water withdrawal of up to 2.000 mgd (peak day).

6. Project Sponsor and Facility: Carrizo (Marcellus), LLC (East Branch Wyalusing Creek), Jessup Township, Susquehanna County, Pa. Application for renewal of surface water withdrawal of up to 0.720 mgd (peak day) (Docket No. 20100601).

7. Project Sponsor and Facility: Heidelberg Township Municipal Authority, Heidelberg Township, Lebanon County, Pa. Application for renewal of groundwater withdrawal of up to 0.115 mgd (30-day average) from Well 5 (Docket No. 19820602).

8. Project Sponsor and Facility: IBM Corporation, Village of Owego, Tioga County, N.Y. Application for groundwater withdrawal of up to 0.002 mgd (30-day average) from Well 415.

9. Project Sponsor and Facility: Inflection Energy (PA) LLC (Loyalsock Creek), Upper Fairfield Township, Lycoming County, Pa. Application for surface water withdrawal of up to 1.700 mgd (peak day).

10. Project Sponsor and Facility: Jay Township Water Authority, Jay Township, Elk County, Pa. Application for groundwater withdrawal of up to 0.265 mgd (30-day average) from Byrnedale Well #1.

11. Project Sponsor: Lancaster County Solid Waste Management Authority. Project Facility: Susquehanna Resource Management Complex, City of Harrisburg, Dauphin County, Pa. Application for consumptive water use of up to 0.700 mgd (peak day).

12. Project Sponsor: Leola Sewer Authority. Project Facility: Upper Leacock Township, Lancaster County, Pa. Application for groundwater withdrawal of up to 0.075 mgd (30-day average) from Well 13.

13. Project Sponsor and Facility: LHP Management, LLC (Muncy Creek), Muncy Creek Township, Lycoming County, Pa. Application for renewal of surface water withdrawal of up to 0.999 mgd (peak day) (Docket No. 20120607).

14. Project Sponsor and Facility: Millersville University of Pennsylvania, Millersville Borough, Lancaster County, Pa. Application for renewal of consumptive water use of up to 0.253 mgd (peak day) (Docket No. 19820105).

15. Project Sponsor and Facility: Millersville University of Pennsylvania, Millersville Borough, Lancaster County, Pa. Application for renewal and modification to increase groundwater withdrawal by an additional 0.055 mgd (30-day average) from Well 1, for a total of up to 0.320 mgd (30-day average) from Well 1 (Docket No. 19820105).

16. Project Sponsor and Facility: Newport Borough Water Authority, Oliver and Howe Townships and Newport Borough, Perry County, Pa. Application for groundwater

withdrawal of up to 0.162 mgd (30-day average) from Well 1.

17. Project Sponsor: Pennsylvania Department of Environmental Protection—South-central Regional Office, City of Harrisburg, Dauphin County, Pa. Facility Location: Leacock Township, Lancaster County, Pa. Application for groundwater withdrawal of up to 0.590 mgd (30-day average) from Stoltzfus Well.

18. Project Sponsor: Pennsylvania Department of Environmental Protection—South-central Regional Office, City of Harrisburg, Dauphin County, Pa. Facility Location: Leacock Township, Lancaster County, Pa. Application for groundwater withdrawal of up to 0.432 mgd (30-day average) from Township Well.

19. Project Sponsor and Facility: Somerset Regional Water Resources, LLC (Salt Lick Creek), New Milford Township, Susquehanna County, Pa. Application for renewal of surface water withdrawal of up to 0.720 mgd (peak day) (Docket No. 20100905).

20. Project Sponsor and Facility: Sugar Hollow Trout Park and Hatchery, Eaton Township, Wyoming County, Pa. Application for renewal of groundwater withdrawal of up to 0.864 mgd (30-day average) from Wells 1, 2, and 3 (the Hatchery Well Field) (Docket No. 20100913).

21. Project Sponsor and Facility: Sunbury Generation LP, Shamokin Dam Borough and Monroe Township, Snyder County, Pa. Modification to project features and reduction of the surface water withdrawal from 354.000 mgd (peak day) to 10.000 mgd (peak day) (Docket No. 20081222).

22. Project Sponsor and Facility: Sunbury Generation LP, Shamokin Dam Borough and Monroe Township, Snyder County, Pa. Modification to project features and reduction of the consumptive water use from 8.000 mgd (peak day) to 6.500 mgd (peak day) (Docket No. 20081222).

23. Project Sponsor and Facility: SWEPI LP (Cowanesque River), Nelson Township, Tioga County, Pa. Application for renewal of surface water withdrawal of up to 0.533 mgd (peak day) (Docket No. 20100604).

24. Project Sponsor and Facility: Talisman Energy USA Inc. (Susquehanna River), Terry Township, Bradford County, Pa. Application for renewal of surface water withdrawal of up to 2.000 mgd (peak day) (Docket No. 20100613).

25. Project Sponsor and Facility: Talisman Energy USA Inc. (Wappasening Creek), Windham Township, Bradford County, Pa. Application for surface water withdrawal of up to 0.999 mgd (peak day).

26. Project Sponsor and Facility: Upper Halfmoon Water Company, Halfmoon Township, Centre County, Pa. Application for groundwater withdrawal of up to 0.396 mgd (30-day average) from Well 6.

27. Project Sponsor and Facility: Warwick Township Municipal Authority, Warwick Township, Lancaster County, Pa. Application for groundwater withdrawal of up to 0.288 mgd (30-day average) from Rothsville Well 2.

Public Hearing—Projects Scheduled for Action Involving a Diversion

1. Project Sponsor and Facility: City of Aberdeen, Harford County, Md. Modification to extend the approval term of the out-of-basin diversion approval (Docket No. 20021210) to be coterminous with the revised Maryland Department of the Environment State Water Appropriation and Use Permit for the Aberdeen Proving Ground-Aberdeen Area.

2. Project Sponsor: DS Services of America, Inc. Project Facility: Bethany Children's Home, Heidelberg Township, Berks County, Pa. Application of into-basin diversion from the Delaware River Basin of up to 0.200 mgd (peak day) from Bethany Children's Home bulk spring water source (Boreholes PWA and PWB).

Opportunity To Appear and Comment

Interested parties may appear at the hearing to offer comments to the Commission on any project listed above. The presiding officer reserves the right to limit oral statements in the interest of time and to otherwise control the course of the hearing. Ground rules will be posted on the Commission's Web site, *www.srbc.net,* prior to the hearing for review. The presiding officer reserves the right to modify or supplement such rules at the hearing. Written comments on any project listed above may also be mailed to Mr. Jason Oyler, Regulatory Counsel, Susquehanna River Basin Commission, 4423 North Front Street, Harrisburg, Pa. 17110–1788, or submitted electronically through *http://www.srbc.net/pubinfo/publicparticipation.htm.* Comments mailed or electronically submitted must be received by the Commission on or before August 18, 2014, to be considered.

Authority: Pub. L. 91–575, 84 Stat. 1509 et seq., 18 CFR Parts 806, 807, and 808.

Dated: July 3, 2014.

Stephanie L. Richardson,

Secretary to the Commission.

[FR Doc. 2014–16286 Filed 7–10–14; 8:45 am]

BILLING CODE 7040–01–P

SUSQUEHANNA RIVER BASIN COMMISSION

Projects Approved for Consumptive Uses of Water

AGENCY: Susquehanna River Basin Commission.

ACTION: Notice.

SUMMARY: This notice lists the projects approved by rule by the Susquehanna River Basin Commission during the period set forth in **DATES**.

DATES: May 1–31, 2014.

ADDRESSES: Susquehanna River Basin Commission, 4423 North Front Street, Harrisburg, PA 17110–1788.

FOR FURTHER INFORMATION CONTACT: Richard A. Cairo, General Counsel, telephone: (717) 238–0423, ext. 1306; fax: (717) 238–2436; email: *rcairo@srbc.net.* Regular mail inquiries may be sent to the above address.

SUPPLEMENTARY INFORMATION: This notice lists the projects, described below, receiving approval for the consumptive use of water pursuant to the Commission's approval by rule process set forth in 18 CFR 806.22(f) for the time period specified above:

Approvals By Rule Issued Under 18 CFR 806.22(f)

1. Citrus Energy Corporation, Pad ID: Procter and Gamble Mehoopany Plant 1V, ABR–20091014.R1, Washington Township, Wyoming County, Pa.; Consumptive Use of Up to 5.000 mgd; Approval Date: May 1, 2014.

2. Anadarko E&P Onshore LLC, Pad ID: C.O.P. TRACT 343 PAD C, ABR–20090908.R1, Noyes Township, Clinton County, Pa.; Consumptive Use of Up to 5.000 mgd; Approval Date: May 6, 2014.

3. Anadarko E&P Onshore LLC, Pad ID: COP Tr 244 #1000H, ABR–20090927.R1, Rush Township, Centre County, Pa.; Consumptive Use of Up to 5.000 mgd; Approval Date: May 6, 2014.

4. Anadarko E&P Onshore LLC, Pad ID: COP Tr 244 #1001H & #1002H, ABR–20090928.R1, Rush Township, Centre County, Pa.; Consumptive Use of Up to 5.000 mgd; Approval Date: May 6, 2014.

5. Seneca Resources Corporation, Pad ID: DCNR 595 Pad A, ABR–201405001, Covington Township, Tioga County, Pa.; Consumptive Use of Up to 4.000 mgd; Approval Date: May 12, 2014.

6. Chief Oil & Gas LLC, Pad ID: Blanchard Drilling Pad, ABR–201405002, McNett Township, Lycoming County, Pa.; Consumptive Use of Up to 2.500 mgd; Approval Date: May 12, 2014.

7. Range Resources—Appalachia, LLC, Pad ID: Cornwall B Unit, ABR–201405003, Lewis Township, Lycoming County, Pa.; Consumptive Use of Up to 5.000 mgd; Approval Date: May 12, 2014.

8. WPX Energy Appalachia, LLC, Pad ID: Five E's FLP Pad Site, ABR–20090801.R1, Middletown Township, Susquehanna County, Pa.; Consumptive Use of Up to 3.000 mgd; Approval Date: May 13, 2014.

9. WPX Energy Appalachia, LLC, Pad ID: Markovitch Pad Site, ABR–20090828.R1, Bridgewater Township, Susquehanna County, Pa.; Consumptive Use of Up to 3.999 mgd; Approval Date: May 13, 2014.

10. Inflection Energy (PA), LLC, Pad ID: TLC Pad, ABR–201405004, Eldred Township, Lycoming County, Pa.; Consumptive Use of Up to 4.000 mgd; Approval Date: May 13, 2014.

11. Inflection Energy (PA), LLC, Pad ID: Griggs Pad, ABR–201405005, Eldred and Loyalsock Townships, Lycoming County, Pa.; Consumptive Use of Up to 4.000 mgd; Approval Date: May 13, 2014.

12. Southwestern Energy Production Company, Pad ID: Lepley Pad—TI–04, ABR–201405006, Liberty Township, Tioga County, Pa.; Consumptive Use of Up to 4.999 mgd; Approval Date: May 13, 2014.

13. Chesapeake Appalachia, LLC, Pad ID: Dr. Marone, ABR–201405007, Washington Township, Wyoming County, Pa.; Consumptive Use of Up to 7.500 mgd; Approval Date: May 13, 2014.

14. WPX Energy Appalachia, LLC, Pad ID: Carty Pad Site, ABR–20090916.R1, Liberty Township, Susquehanna County, Pa.; Consumptive Use of Up to 3.999 mgd; Approval Date: May 15, 2014.

15. Chief Oil & Gas LLC, Pad ID: Teel Unit #1H, ABR–20091115.R1, Springville Township, Susquehanna County, Pa.; Consumptive Use of Up to 5.000 mgd; Approval Date: May 15, 2014.

16. Cabot Oil & Gas Corporation, Pad ID: PlonskiI P1, ABR–201405008, Gibson Township, Susquehanna County, Pa.; Consumptive Use of Up to 4.250 mgd; Approval Date: May 23, 2014.

17. Cabot Oil & Gas Corporation, Pad ID: Friedland Farms P1, ABR–201405009, Lenox Township, Susquehanna County, Pa.; Consumptive Use of Up to 4.250 mgd; Approval Date: May 23, 2014.

18. Chief Oil & Gas LLC, Pad ID: Teel Unit Drilling Pad #2H, ABR–20091204.R1, Springville Township, Susquehanna County, Pa.; Consumptive Use of Up to 2.000 mgd; Approval Date: May 27, 2014.

19. Chief Oil & Gas LLC, Pad ID: Teel Unit Drilling Pad #3H, ABR–20091205.R1, Springville Township, Susquehanna County, Pa.; Consumptive Use of Up to 2.000 mgd; Approval Date: May 27, 2014.

20. Cabot Oil & Gas Corporation, Pad ID: ButlerL P1, ABR–201405010, Lathrop Township, Susquehanna County, Pa.; Consumptive Use of Up to 4.250 mgd; Approval Date: May 27, 2014.

Authority: Pub. L. 91–575, 84 Stat. 1509 et seq., 18 CFR Parts 806, 807, and 808.

Dated: July 2, 2014.

Stephanie L. Richardson,

Secretary to the Commission.

[FR Doc. 2014–16250 Filed 7–10–14; 8:45 am]

BILLING CODE 7040–01–P

SUSQUEHANNA RIVER BASIN COMMISSION

Projects Approved for Consumptive Uses of Water

AGENCY: Susquehanna River Basin Commission.

ACTION: Notice.

SUMMARY: This notice lists the projects approved by rule by the Susquehanna River Basin Commission during the period set forth in **DATES**.

DATES: April 1–30, 2014.

ADDRESSES: Susquehanna River Basin Commission, 4423 North Front Street, Harrisburg, PA 17110–1788.

FOR FURTHER INFORMATION CONTACT: Richard A. Cairo, General Counsel, telephone: (717) 238–0423, ext. 1306; fax: (717) 238–2436; email: *rcairo@srbc.net.* Regular mail inquiries may be sent to the above address.

SUPPLEMENTARY INFORMATION: This notice lists the projects, described below, receiving approval for the consumptive use of water pursuant to the Commission's approval by rule process set forth in 18 CFR 806.22(f) for the time period specified above:

Approvals By Rule Issued Under 18 CFR 806.22(f)

1. Cabot Oil & Gas Corporation, Pad ID: Shields G P1, ABR–20090930.R1, Dimock Township, Susquehanna County, Pa.; Consumptive Use of Up to 3.575 mgd; Approval Date: April 14, 2014.

2. Cabot Oil & Gas Corporation, Pad ID: HunsingerA P2, ABR–20090931.R1, Dimock Township, Susquehanna County, Pa.; Consumptive Use of Up to 3.575 mgd; Approval Date: April 14, 2014.

3. Cabot Oil & Gas Corporation, Pad ID: Hoover P1, ABR–20090937.R1, Dimock Township, Susquehanna County, Pa.; Consumptive Use of Up to 3.575 mgd; Approval Date: April 14, 2014.

4. Pennsylvania General Energy Company, LLC, Pad ID: COP TRACT 724—PAD A, ABR–20091118.R1, Gamble Township, Lycoming County, Pa.; Consumptive Use of Up to 2.000 mgd; Approval Date: April 14, 2014.

5. Chief Oil & Gas LLC, Pad ID: Herbert Drilling Pad, ABR–201404001, Harford Township, Susquehanna County, Pa.; Consumptive Use of Up to 2.500 mgd; Approval Date: April 16, 2014.

6. Cabot Oil & Gas Corporation, Pad ID: PijanowskiJ P1, ABR–201404002, Springville Township, Susquehanna County, Pa.; Consumptive Use of Up to 4.250 mgd; Approval Date: April 25, 2014.

7. Anadarko E&P Onshore, LLC, Pad ID: Bonnel Run H&F Pad D, ABR–201404003, Pine Township, Lycoming County, Pa.; Consumptive Use of Up to 4.000 mgd; Approval Date: April 25, 2014.

8. Chesapeake Appalachia, LLC, Pad ID: Three Reasons, ABR–201404004, Overton Township, Bradford County, Pa.; Consumptive Use of Up to 7.500 mgd; Approval Date: April 25, 2014.

9. Chesapeake Appalachia, LLC, Pad ID: Eileen, ABR–20090806.R1, Smithfield Township, Bradford County, Pa.; Consumptive Use of Up to 7.500 mgd; Approval Date: April 25, 2014.

10. Chesapeake Appalachia, LLC, Pad ID: Claudia, ABR–20090807.R1, Terry Township, Bradford County, Pa.; Consumptive Use of Up to 7.500 mgd; Approval Date: April 25, 2014.

11. Chesapeake Appalachia, LLC, Pad ID: Bonnie, ABR–20090904.R1, Albany Township, Bradford County, Pa.; Consumptive Use of Up to 7.500 mgd; Approval Date: April 25, 2014.

12. Talisman Energy USA Inc., Pad ID: Eick 013, ABR–20091105.R1, Columbia Township, Bradford County, Pa.; Consumptive Use of Up to 3.000 mgd; Approval Date: April 25, 2014.

13. Chief Oil & Gas LLC, Pad ID: Marcy Drilling Pad, ABR–201404005, Lenox Township, Susquehanna County, Pa.; Consumptive Use of Up to 2.500 mgd; Approval Date: April 29, 2014.

14. Chief Oil & Gas LLC, Pad ID: Harvey Drilling Pad, ABR–201404006, Elkland Township, Sullivan County, Pa.; Consumptive Use of Up to 2.500 mgd; Approval Date: April 29, 2014.

15. Pennsylvania General Energy Company, LLC, Pad ID: SGL75 Pad A, ABR–201404007, McHenry Township, Lycoming County, Pa.; Consumptive Use of Up to 2.500 mgd; Approval Date: April 29, 2014.

16. Pennsylvania General Energy Company, LLC, Pad ID: Pine Hill 1941 A–B, ABR–20090926.R1, Wharton Township, Potter County, Pa.; Consumptive Use of Up to 4.900 mgd; Approval Date: April 29, 2014.

17. Pennsylvania General Energy Company, LLC, Pad ID: Pine Hill West Pad B, ABR–20090929.R1, Sylvania Township, Potter County, Pa.; Consumptive Use of Up to 4.900 mgd; Approval Date: April 29, 2014.

18. Anadarko E&P Onshore, LLC, Pad ID: COP Tr 551 A, ABR–201404008, McIntyre Township, Lycoming County, Pa.; Consumptive Use of Up to 4.000 mgd; Approval Date: April 29, 2014.

19. Anadarko E&P Onshore, LLC, Pad ID: Marilyn Ely Pad A, ABR–201404009, Gamble Township, Lycoming County, Pa.; Consumptive Use of Up to 4.000 mgd; Approval Date: April 29, 2014.

Authority: Pub. L. 91–575, 84 Stat. 1509 et seq., 18 CFR Parts 806, 807, and 808.

Dated: July 1, 2014.

Stephanie L. Richardson,

Secretary to the Commission.

[FR Doc. 2014–16249 Filed 7–10–14; 8:45 am]

BILLING CODE 7040–01–P

DEPARTMENT OF TRANSPORTATION

Federal Highway Administration

Notice of Final Federal Agency Actions on Proposed Highway in North Carolina

AGENCY: Federal Highway Administration (FHWA), DOT

ACTION: Notice of Limitation on Claims for Judicial Review of Actions by FHWA and Other Federal Agencies.

SUMMARY: This notice announces actions taken by the FHWA and other Federal agencies that are final within the meaning of 23 U.S.C. 139 (*l*)(1). The actions relate to a proposed highway project, the Monroe Connector Bypass, a controlled-access toll road extending from US 74 near I–485 in Mecklenburg County to US 74 between the towns of Wingate and Marshville in Union County, North Carolina. Those actions grant licenses, permits, and approvals for the project.

DATES: By this notice, the FHWA is advising the public of final agency actions subject to 23 U.S.C. 139 (*l*)(1). A claim seeking judicial review of the Federal agency actions on the highway project will be barred unless the claim is filled on or before December 4, 2014. If the Federal law that authorizes judicial review of a claim provides a time period of less than 150 days for filing such claim, then that shorter time period still applies.

FOR FURTHER INFORMATION CONTACT: Mr. George W. Hoops, P.E., Major Projects Engineer, Federal Highway Administration, 310 New Bern Avenue, Suite 410, Raleigh, North Carolina 27601–1418; Telephone: (919) 747–7022; email: *george.hoops@dot.gov.* FHWA North Carolina Division Office's normal business hours are 8 a.m. to 5 p.m. (Eastern Standard Time). Mr. Richard W. Hancock, P.E., Project Development and Environmental Analysis Branch Manager, North Carolina Department of Transportation (NCDOT), 1548 Mail Service Center, Raleigh, North Carolina 27699–1548; Telephone (919) 707–6000, email: *rwhancock@dot.state.nc.us.* NCDOT—Project Development and Environmental Analysis Branch Office's normal business hours are 8 a.m. to 5 p.m. (Eastern Standard Time).

SUPPLEMENTARY INFORMATION: Notice is hereby given that the FHWA and other Federal agencies have taken final agency actions subject to 23 U.S.C. 139 (*l*)(1) by issuing licenses, permits, and approvals for the following highway project in the State of North Carolina: Monroe Connector/Bypass, Federal Aid No. STP–NHF–74(90), from US 74 near I–485 in Mecklenburg County to US 74 between the towns of Wingate and Marshville in Union County, North Carolina. The project is also known as State Transportation Improvement Program (STIP) Projects R–3329 and R–2559. The project is an approximately 20-mile long, multi-lane, fully access-controlled, new location toll road. The project follows existing US 74 for approximately one mile from just east of I–485 to east of Stallings Road (SR 1365) and then proceeds eastward on a new location alignment from east of Stallings Road to the project terminus at existing US 74 between the towns of Wingate and Marshville.

The actions by the Federal agencies, and the laws under which such actions were taken, are described in the Combined Final Supplemental Final Environmental Impact Statement (EIS) and Record of Decision (ROD), approved on May 15, 2014, and in other documents in the FHWA administrative record. The Final Supplemental Final EIS/ROD and other documents in the FHWA administrative record file are available by contacting the FHWA or NCDOT at the addresses provided above. The Final Supplemental Final EIS/ROD can be viewed and downloaded from the project Web site at *http://www.ncdot.gov/projects/monroeconnector/projectResources.html.* A final decision regarding Section 404 permits for this project has not yet been made. This notice, therefore, does not apply to the Section 404 permitting process for this project. This notice applies to all Federal agency actions and decisions as of the issuance date of this notice and all laws under which such actions were taken, including but not limited to:

1. *General:* National Environmental Policy Act (NEPA) [42 USC 4321–4351]; Federal-Aid Highway Act [23 U.S.C. 109].

2. *Air:* Clean Air Act [42 U.S.C. 7401–7671(q)].

3. *Land:* Section 4(f) of the Department of Transportation Act of 1966 [49 U.S.C. 303]; Landscaping and Scenic Enhancement (Wildflowers) [23 U.S.C. 319].

4. *Wildlife:* Endangered Species Act [16 USC 1531–1544 and Section 1536], Marine Mammal Protection Act [16 U.S.C. 1361], Anadromous Fish Conservation Act [16 U.S.C. 757(a)–757(g)], Fish and Wildlife Coordination Act [16 U.S.C. 661–667(d)], Migratory Bird Treaty Act (MBTA) [16 U.S.C. 703–712], Magnuson-Stevenson Fishery Conservation and Management Act of 1976, as amended [16 U.S.C. 1801 et seq.].

5. *Historic and Cultural Resources:* Section 106 of the National Historic Preservation Act of 1966, as amended [16 U.S.C. 470(f) et seq.]; Archeological Resources Protection Act of 1977 (ARPA) [16 U.S.C. 470(aa)–470(II)]; Archeological and Historic Preservation Act (AHPA) [16 U.S.C. 469–469(c)]; Native American Grave Protection and Repatriation Act (NAGPRA) [25 U.S.C. 3001–3013].

6. *Social and Economic:* Civil Rights Act of 1964 [42 U.S.C. 2000(d)–2000(d)(1)]; American Indian Religious Freedom Act [42 U.S.C. 1996]; Farmland Protection Policy Act (FPPA) [7 U.S.C. 4201–4209].

7. Wetlands and Water Resources: Clean Water Act [33 U.S.C. 1251–1377 (Section 404, Section 401, Section 319)]; Land and Water Conservation Fund (LWCF) [16 U.S.C. 4601–4604]; Safe Drinking Water Act (SDWA) [42 U.S.C. 300(f)–300(j)(6)]; Wild and Scenic Rivers Act [16 U.S.C. 1271–1287]; Emergency Wetlands Resources Act [16

U.S.C. 3921, 3931]; Wetlands Mitigation [23 U.S.C. 119(g)]; Flood Disaster Protection Act [42 U.S.C. 4001–4128].

8. *Hazardous Materials:* Comprehensive Environmental Response, Compensation, and Liability Act (CERCLA) [42 U.S.C. 9601–9675]; Superfund Amendments and Reauthorization Act of 1986 (SARA); Resource Conservation and Recovery Act (RCRA) [42 U.S.C. 6901–6992(k)].

9. *Executive Orders:* E.O. 11990 Protection of Wetlands; E.O. 11988 Floodplain Management; E.O. 12898, Federal Actions to Address Environmental Justice in Minority Populations and Low Income Populations; E.O. 11593 Protection and Enhancement of Cultural Resources; E.O. 11514 Protection and Enhancement of Environmental Quality; E.O. 13112 Invasive Species.

(Catalog of Federal Domestic Assistance Program Number 20.205, Highway Planning and Construction. The regulations implementing Executive Order 12372 regarding intergovernmental consultation on Federal programs and activities apply to this program.)

Authority: 23 U.S.C. § 139 (*l*)(1)

Issued on: June 26, 2014.

George W. Hoops, P.E.,

Major Project Engineer, Raleigh, North Carolina.

[FR Doc. 2014–15744 Filed 7–10–14; 8:45 am]

BILLING CODE 4910–RY–P

DEPARTMENT OF TRANSPORTATION

Federal Motor Carrier Safety Administration

[Docket No. FMCSA 2014–0240]

Agency Information Collection Activities; Revision of a Currently Approved Collection: Generic Clearance for the Collection of Qualitative Feedback on Agency Service Delivery

AGENCY: Federal Motor Carrier Safety Administration (FMCSA), DOT.

ACTION: Notice and request for comments.

SUMMARY: In accordance with the Paperwork Reduction Act of 1995, FMCSA announces its plan to submit the Information Collection Request (ICR) described below to the Office of Management and Budget (OMB) for its review and approval and invites public comment. The FMCSA requests approval to revise an existing ICR titled, ''Generic Clearance for the Collection of Qualitative Feedback on Agency Service Delivery,'' due to an increase in the annual cost to respondents. This ICR will allow for ongoing, collaborative and actionable communication between FMCSA and its customers and stakeholders. It will also allow feedback to contribute directly to the improvement of program management. On April 18, 2014, FMCSA published a **Federal Register** notice allowing for a 60-day comment period on this ICR. The agency received no comments in response to that notice.

DATES: Please send your comments to this notice by August 11, 2014. OMB must receive your comments by this date to act quickly on the ICR.

ADDRESSES: All comments should reference Federal Docket Management System (FDMS) Docket Number FMCSA–2014–0240. Interested persons are invited to submit written comments on the proposed information collection to the Office of Information and Regulatory Affairs, Office of Management and Budget. Comments should be addressed to the attention of the Desk Officer, Department of Transportation/Federal Motor Carrier Safety Administration, and sent via electronic mail to *oira_submission@omb.eop.gov,* faxed to (202) 395–6974, or mailed to the Office of Information and Regulatory Affairs, Office of Management and Budget, Docket Library, Room 10102, 725 17th Street NW., Washington, DC 20503.

FOR FURTHER INFORMATION CONTACT: Mr. Brian Ronk, Program Manager, FMCSA, Office of Enforcement and Program Delivery, Outreach Division/MC–ESO. Telephone (202) 366–1072; or email *brian.ronk@dot.gov.* Department of Transportation, Federal Motor Carrier Safety Administration, 1200 New Jersey Avenue SE., Washington, DC 20590.

Mr. Jeff Loftus,, Supervisory Transportation Specialist, Technology Division/MC–RRT, Office of Analysis, Research and Technology, Telephone (202) 385–2363; or email *jeff.loftus@dot.gov,* Department of Transportation, Federal Motor Carrier Safety Administration, 1200 New Jersey Avenue SE., Washington, DC 20590.

SUPPLEMENTARY INFORMATION:

Title: Generic Clearance for the Collection of Qualitative Feedback on Agency Service Delivery.

OMB Control Number: 2126–0049.

Type of Request: Revision of a currently-approved information collection.

Respondents: State and local agencies, general public and stakeholders, original equipment manufacturers (OEM) and suppliers to the commercial motor vehicle (CMV) industry, fleets, owner-operators, state CMV safety agencies, research organizations and contractors, news organizations, safety advocacy groups, and other Federal agencies.

Estimated Number of Respondents: 14,100.

Estimated Time per Response: Range from 5—30 minutes.

Expiration Date: September 30, 2014.

Frequency of Response: Generally, on an annual basis.

Estimated Total Annual Burden: 3,450.

Background: Executive Order 12862 ''Setting Customer Service Standards,'' direct Federal agencies to provide service to the public that matches or exceeds the best service available in the private sector (58 FR 48257, Sept. 11, 1993). In order to work continuously to ensure that our programs are effective and meet our customers' needs, FMCSA seeks to obtain OMB approval of a generic clearance to collect qualitative feedback from our customers on our service delivery. The surveys covered in this generic clearance will provide a means for FMCSA to collect this data directly from our customers. The information collected from our customers and stakeholders will help ensure that users have an effective, efficient, and satisfying experience with FMCSA's programs. This feedback will provide insights into customer or stakeholder perceptions, experiences and expectations, provide an early warning of issues with service, or focus attention on areas where communication, training or changes in operations might improve delivery of products or services. It will also allow feedback to contribute directly to the improvement of program management. The responses to the surveys will be voluntary and will not involve information that is required by regulations.

Public Comments Invited

FMCSA requests that you comment on any aspect of this information collection, including: (1) Whether the proposed collection is necessary for FMCSA to perform its functions, (2) the accuracy of the estimated burden, (3) ways for the FMCSA to enhance the quality, usefulness, and clarity of the collected information, and (4) ways that the burden could be minimized without reducing the quality of the collected information. The agency will summarize or include your comments in the request for OMB's clearance of this information collection.

Issued under the authority delegated in 49 CFR 1.87 on: July 1, 2014.

G. Kelly Regal,

Associate Administrator, Office of Research and Information Technology and Chief Information Officer.

[FR Doc. 2014–16302 Filed 7–10–14; 8:45 am]

BILLING CODE 4910–EX–P

DEPARTMENT OF TRANSPORTATION

Federal Motor Carrier Safety Administration

[Docket No. FMCSA–2008–0362]

Medical Review Board Public Meeting

AGENCY: Federal Motor Carrier Safety Administration (FMCSA), DOT.

ACTION: Notice of Medical Review Board (MRB) public meeting.

SUMMARY: FMCSA announces that the Medical Review Board will meet on Tuesday and Wednesday, July 29—30, 2014. The MRB will continue its deliberations on Schedule II Controlled Substances and their effect on commercial motor vehicle (CMV) drivers' ability to operate safely. The entire meeting is open to the public and there will be a public comment period at the end of each day.

Time and Dates: The meeting will be held on Tuesday, July 29, 2014, from 9:00 a.m. to 4:30 p.m., and on Wednesday, July 30, 2014, from 9 a.m. to 12:00 p.m., Eastern Daylight Time (E.D.T.). The meeting will be held at the FMCSA National Training Center (NTC), 1310 North Courthouse Road, Suite 600, Arlington, VA. The NTC is located near the Courthouse Metro station.

An agenda for the meeting will be made available in advance of the meeting at *http://mrb.fmcsa.dot.gov.*

FOR FURTHER INFORMATION CONTACT: Eileen Nolan, R.N., MRB Liaison, Medical Programs Division, Federal Motor Carrier Safety Administration, 1200 New Jersey Avenue SE., Washington, DC 20590, (202) 366–4001, *fmcsamedical@dot.gov.*

Services for Individuals With Disabilities

For information on facilities or services for individuals with disabilities or to request special assistance at the meeting, contact Mr. Eran Segev at (617) 494–3174, *eran.segev@dot.gov,* by Monday, July 21, 2014.

SUPPLEMENTARY INFORMATION:

I. Background

MRB

Section 4116 of the Safe, Accountable, Flexible, Efficient Transportation Equity Act: A Legacy for Users (SAFETEA–LU), [Pub. L. 109–59, 119 Stat. 1144, Aug. 10, 2005] requires the Secretary of Transportation, with the advice of the MRB and the chief medical examiner, to establish, review, and revise ''medical standards for operators of commercial motor vehicles that will ensure that the physical condition of operators of commercial motor vehicles is adequate to enable them to operate the vehicles safely.'' Composed of five medical experts who each serve 2-year terms, the MRB members are appointed by the Secretary.

The MRB operates in accordance with the Federal Advisory Committee Act (FACA) as announced in the **Federal Register** (70 FR 57642, October 3, 2005). The MRB is charged with the review of all current FMCSA medical standards (49 CFR 391.41), as well as proposing new science-based standards and guidelines to ensure that drivers operating CMVs in interstate commerce, as defined in 49 CFR 390.5, are physically capable of doing so.

II. Meeting Participation

Oral comments from the public will be heard during the last thirty minutes of each day of the meeting. Should all public comments be exhausted prior to the end of the specified period, the comment period will close.

Members of the public may submit written comments by Monday, July 21, 2014, to Federal Docket Management System (FDMC) Docket Number FMCSA–2008–0362 using one of the following methods:

- *Federal eRulemaking Portal:* Go to *http://www.regulations.gov.* Follow the online instructions for submitting comments.
- *Fax:* 202–493–2251.
- *Mail:* Docket Management Facility; U.S. Department of Transportation, 1200 New Jersey Avenue SE., West Building, Room W12–140, Washington, DC 20590.
- *Hand Delivery:* U.S. Department of Transportation, 1200 New Jersey Avenue SE., Room W12–140, Washington, DC, between 9 a.m. and 5 p.m., E.T. Monday through Friday, except Federal holidays.

Issued on: July 3, 2014.

Larry W. Minor,

Associate Administrator for Policy.

[FR Doc. 2014–16289 Filed 7–10–14; 8:45 am]

BILLING CODE 4910–EX–P

DEPARTMENT OF TRANSPORTATION

Federal Motor Carrier Safety Administration

[Docket No. FMCSA–2010–0014]

Qualification of Drivers; Exemption Applications; Vision

AGENCY: Federal Motor Carrier Safety Administration (FMCSA), DOT.

ACTION: Notice of renewal of exemptions; request for comments.

SUMMARY: FMCSA announces its decision to renew the exemptions from the vision requirement in the Federal Motor Carrier Safety Regulations for 14 individuals. FMCSA has statutory authority to exempt individuals from the vision requirement if the exemptions granted will not compromise safety. The Agency has concluded that granting these exemption renewals will provide a level of safety that is equivalent to or greater than the level of safety maintained without the exemptions for these commercial motor vehicle (CMV) drivers.

DATES: This decision is effective August 9, 2014. Comments must be received on or before August 11, 2014.

ADDRESSES: You may submit comments bearing the Federal Docket Management System (FDMS) numbers: Docket No. [Docket No. FMCSA–2010–0014], using any of the following methods:

- Federal eRulemaking Portal: Go to *http://www.regulations.gov.* Follow the on-line instructions for submitting comments.
- Mail: Docket Management Facility; U.S. Department of Transportation, 1200 New Jersey Avenue SE., West Building Ground Floor, Room W12–140, Washington, DC 20590–0001.
- Hand Delivery or Courier: West Building Ground Floor, Room W12–140, 1200 New Jersey Avenue SE., Washington, DC, between 9 a.m. and 5 p.m., Monday through Friday, except Federal Holidays.
- Fax: 1–202–493–2251.

Instructions: Each submission must include the Agency name and the docket number for this notice. Note that DOT posts all comments received without change to *http://www.regulations.gov,* including any personal information included in a comment. Please see the Privacy Act heading below.

Docket: For access to the docket to read background documents or comments, go to *http://www.regulations.gov* at any time or Room W12–140 on the ground level of

the West Building, 1200 New Jersey Avenue SE., Washington, DC, between 9 a.m. and 5 p.m., Monday through Friday, except Federal holidays. The Federal Docket Management System (FDMS) is available 24 hours each day, 365 days each year. If you want acknowledgment that we received your comments, please include a self-addressed, stamped envelope or postcard or print the acknowledgement page that appears after submitting comments on-line.

Privacy Act: Anyone may search the electronic form of all comments received into any of our dockets by the name of the individual submitting the comment (or of the person signing the comment, if submitted on behalf of an association, business, labor union, etc.). You may review DOT's Privacy Act Statement for the Federal Docket Management System (FDMS) published in the **Federal Register** on January 17, 2008

(73 FR 3316).

FOR FURTHER INFORMATION CONTACT:

Elaine M. Papp, Chief, Medical Programs Division, 202–366–4001, *fmcsamedical@dot.gov,* FMCSA, Department of Transportation, 1200 New Jersey Avenue SE., Room W64–224, Washington, DC 20590–0001. Office hours are from 8:30 a.m. to 5 p.m. Monday through Friday, except Federal holidays.

SUPPLEMENTARY INFORMATION:

Background

Under 49 U.S.C. 31136(e) and 31315, FMCSA may renew an exemption from the vision requirements in 49 CFR 391.41(b)(10), which applies to drivers of CMVs in interstate commerce, for a two-year period if it finds ''such exemption would likely achieve a level of safety that is equivalent to or greater than the level that would be achieved absent such exemption.'' The procedures for requesting an exemption (including renewals) are set out in 49 CFR part 381.

Exemption Decision

This notice addresses 14 individuals who have requested renewal of their exemptions in accordance with FMCSA procedures. FMCSA has evaluated these 14 applications for renewal on their merits and decided to extend each exemption for a renewable two-year period. They are:

David E. Balboni (MA)
Mark S. Berkheimer (PA)
Tony K. Ellis (IN)
Rici W. Giesseman (OH)
Michael A. Jabro (MI)
Michael M. Martinez (NM)
Robert L. McClain (MI)
Daniel E. Miller (VA)
Buddy W. Myrick (TX)
James L. Okonek (WI)
Alan J. Reynaldos (NJ)
Charles L. Rill, Sr. (MD)
Robert Smiley (NM)
Roger L. Sulfridge (KY)

The exemptions are extended subject to the following conditions: (1) That each individual has a physical examination every year (a) by an ophthalmologist or optometrist who attests that the vision in the better eye continues to meet the requirements in 49 CFR 391.41(b)(10), and (b) by a medical examiner who attests that the individual is otherwise physically qualified under 49 CFR 391.41; (2) that each individual provides a copy of the ophthalmologist's or optometrist's report to the medical examiner at the time of the annual medical examination; and (3) that each individual provide a copy of the annual medical certification to the employer for retention in the driver's qualification file and retains a copy of the certification on his/her person while driving for presentation to a duly authorized Federal, State, or local enforcement official. Each exemption will be valid for two years unless rescinded earlier by FMCSA. The exemption will be rescinded if: (1) The person fails to comply with the terms and conditions of the exemption; (2) the exemption has resulted in a lower level of safety than was maintained before it was granted; or (3) continuation of the exemption would not be consistent with the goals and objectives of 49 U.S.C. 31136(e) and 31315.

Basis for Renewing Exemptions

Under 49 U.S.C. 31315(b)(1), an exemption may be granted for no longer than two years from its approval date and may be renewed upon application for additional two year periods. In accordance with 49 U.S.C. 31136(e) and 31315, each of the 14 applicants has satisfied the entry conditions for obtaining an exemption from the vision requirements (75 FR 34210; 75 FR 34211; 75 FR 34212; 75 FR 47888; 77 FR 40945). Each of these 14 applicants has requested renewal of the exemption and has submitted evidence showing that the vision in the better eye continues to meet the requirement specified at 49 CFR 391.41(b)(10) and that the vision impairment is stable. In addition, a review of each record of safety while driving with the respective vision deficiencies over the past two years indicates each applicant continues to meet the vision exemption requirements.

These factors provide an adequate basis for predicting each driver's ability to continue to drive safely in interstate commerce. Therefore, FMCSA concludes that extending the exemption for each renewal applicant for a period of two years is likely to achieve a level of safety equal to that existing without the exemption.

Request for Comments

FMCSA will review comments received at any time concerning a particular driver's safety record and determine if the continuation of the exemption is consistent with the requirements at 49 U.S.C. 31136(e) and 31315. However, FMCSA requests that interested parties with specific data concerning the safety records of these drivers submit comments by August 11, 2014.

FMCSA believes that the requirements for a renewal of an exemption under 49 U.S.C. 31136(e) and 31315 can be satisfied by initially granting the renewal and then requesting and evaluating, if needed, subsequent comments submitted by interested parties. As indicated above, the Agency previously published notices of final disposition announcing its decision to exempt these 14 individuals from the vision requirement in 49 CFR 391.41(b)(10). The final decision to grant an exemption to each of these individuals was made on the merits of each case and made only after careful consideration of the comments received to its notices of applications. The notices of applications stated in detail the qualifications, experience, and medical condition of each applicant for an exemption from the vision requirements. That information is available by consulting the above cited **Federal Register** publications.

Interested parties or organizations possessing information that would otherwise show that any, or all, of these drivers are not currently achieving the statutory level of safety should immediately notify FMCSA. The Agency will evaluate any adverse evidence submitted and, if safety is being compromised or if continuation of the exemption would not be consistent with the goals and objectives of 49 U.S.C. 31136(e) and 31315, FMCSA will take immediate steps to revoke the exemption of a driver.

Submitting Comments

You may submit your comments and material online or by fax, mail, or hand delivery, but please use only one of these means. FMCSA recommends that you include your name and a mailing address, an email address, or a phone

number in the body of your document so that FMCSA can contact you if there are questions regarding your submission.

To submit your comment online, go to *http://www.regulations.gov* and in the search box insert the docket numbers FMCSA–2010–0114 and click the search button. When the new screen appears, click on the blue ''Comment Now!'' button on the right hand side of the page. On the new page, enter information required including the specific section of this document to which each comment applies, and provide a reason for each suggestion or recommendation. If you submit your comments by mail or hand delivery, submit them in an unbound format, no larger than 8½ by 11 inches, suitable for copying and electronic filing. If you submit comments by mail and would like to know that they reached the facility, please enclose a stamped, self-addressed postcard or envelope.

We will consider all comments and material received during the comment period and may change this proposed rule based on your comments. FMCSA may issue a final rule at any time after the close of the comment period.

Viewing Comments and Documents

To view comments, as well as any documents mentioned in this preamble, To submit your comment online, go to *http://www.regulations.gov* and in the search box insert the docket number FMCSA–2010–0114 and click ''Search.'' Next, click ''Open Docket Folder'' and you will find all documents and comments related to the proposed rulemaking.

Issued on: June 30, 2014.

Larry W. Minor,

Associate Administrator for Policy.

[FR Doc. 2014–16304 Filed 7–10–14; 8:45 am]

BILLING CODE 4910–EX–P

DEPARTMENT OF TRANSPORTATION

Federal Railroad Administration

Intercity Passenger Rail Grade Crossing Improvements, Positive Train Control Implementation, and Passenger Rail Corridor Investment Plan Grant Funds

AGENCY: Federal Railroad Administration (FRA), Department of Transportation (DOT).

ACTION: Notice of funding availability.

SUMMARY: This notice details the application requirements and procedures for obtaining funding for eligible intercity passenger rail grade crossing improvement projects, positive train control implementation projects, and Passenger Rail Corridor Investment Plan projects. The opportunities described in this notice are available under Catalog of Federal Domestic Assistance (CFDA) number 20.314, ''Railroad Development.''

DATES: Applications for funding under this solicitation are due no later than 5:00 p.m. EDT, September 15, 2014. Applications for funding received after 5:00 p.m. EDT on September 15, 2014 will not be considered. See Section 4 of this notice for additional information regarding the application process.

ADDRESSES: Applications must be submitted via Grants.gov. For any required or supporting application materials that an applicant is unable to submit via Grants.gov (such as oversized engineering drawings), an applicant may submit an original and two (2) copies to Mary Ann Mcnamara, Office of Program Delivery, Federal Railroad Administration, 1200 New Jersey Avenue SE, Mail Stop 20, Washington, DC 20590. However, due to delays caused by enhanced screening of mail delivered via the U.S. Postal Service, applicants are advised to use other means of conveyance (such as courier service) to assure timely receipt of materials.

FOR FURTHER INFORMATION CONTACT: For further information regarding this notice, please contact Mary Ann McNamara, Office of Program Delivery, Federal Railroad Administration, 1200 New Jersey Avenue SE., Mail Stop 20, Washington, DC 20590; Email: maryann.mcnamara@dot.gov; Phone: (202) 493–6393; Fax: (202) 493–6333.

SUPPLEMENTARY INFORMATION:

Notice to applicants: The FRA recommends applicants read this notice in its entirety prior to preparing application materials. There are several administrative prerequisites described herein that applicants must comply with in order to submit an application, as well as application requirements that may differ depending on the type of project and funding sought. The FRA has also established the FY14 Grant Application Solicitation homepage on the FRA Web site, which houses certain required application materials and additional guidance for topics referenced in this notice. The FY14 Grant Application Solicitation homepage is located at *www.fra.dot.gov/Page/P0701*.

Additionally, applicants should note that the required Project Narrative component of the application package may not exceed 25 pages in length (including any appendices).

Table of Contents:

1. Funding Opportunity Description
2. Award Information
3. Eligibility and Review Criteria
4. Application and Submission Information
5. Award Administration Information
6. Agency Contact

Section 1: Funding Opportunity Description

1.1 Background

The purpose of this notice is to solicit applications for eligible intercity passenger rail grade crossing improvement projects, positive train control implementation projects, and Passenger Rail Corridor Investment Plan projects. The funding available under this solicitation was appropriated by Congress over a period of several years. Most recently, the Consolidated Appropriations Act, 2014 (FY14 Omnibus, Pub. L. 113–76, January 17, 2014) made available $41,827,500 in unobligated funding originally authorized under the Safe, Accountable, Flexible, Efficient Transportation Equity Act: A Legacy for Users (SAFETEA–LU, Pub. L. 109–59, August 10, 2005; and later amended under the SAFETEA–LU Technical Corrections Act, Pub. L. 110–244, June 6, 2008) and originally appropriated under the Consolidated Appropriations Act, 2008 (Pub. L. 110–161, December 26, 2007) and Omnibus Appropriations Act, 2009 (Pub. L. 111–8, March 11, 2009). FRA is also making available at least $16,500,000 in additional unobligated funds previously appropriated to FRA under its High-Speed Intercity Passenger Rail (HSIPR) Program. These unobligated funds are available due to projects that were completed under budget or that were not completed as originally anticipated. This notice is also intended to establish a pool of applications that could receive any additional eligible funding that may become available under similar circumstances in the near future.

1.2 FRA-Led Multi-State Planning

In addition to the funding opportunities described in this notice, the FY14 Omnibus also permits the Secretary of Transportation to retain a portion of the $41,827,500 in previous SAFETEA–LU funds to facilitate—at the Federal level—the preparation of planning documents for passenger rail corridors and networks located in multiple states. The Secretary of Transportation has exercised this authority to provide $22,000,000 to complete the Department's NEC FUTURE program, which is a comprehensive planning effort to define, evaluate, and prioritize future

high-speed rail investments along the Northeast Corridor (additional information regarding NEC FUTURE is available at *www.NECFUTURE.com*). In addition to NEC FUTURE, the FRA is soliciting statements of interest from other groups of states that wish to participate in an FRA-led planning process for multi-state passenger rail networks. Additional information on this FRA-led planning process, including how to submit statements of interest, is available at *www.fra.dot.gov/Page/P0021*.

1.3 Funding Approach

In total, at least $36,327,500 is available for awards under this solicitation. The following table summarizes the amount of funding available per funding source, as well as the eligible project categories and match requirements. Section 3 of this notice provides detailed information and instructions pertaining to applicant and project eligibility, cost sharing and match requirements, and application review criteria.

Program/funding source	Amount available	Eligible project categories	Required federal/non-federal match percentage
New FY14 Omnibus Authority	$19,827,500	• Intercity Passenger Rail Capital • Railroad Safety Technology. • High-Speed Rail Corridor Planning. • FRA-Led Multi-State Planning[1]	80–20. (100 percent Federal for FRA-Led Planning).
Remaining FY10 HSIPR	$5,200,000	• Intercity Passenger Rail Capital	80–20
Remaining FY08/FY09 HSIPR	$11,300,000	• Intercity Passenger Rail Capital	50–50
Total	36,327,500		

As the table above indicates, and unlike the remaining FY08, FY09, and FY10 HSIPR Program funding, the $19,827,500 made available by the FY14 Omnibus may fund multiple project types—intercity passenger rail capital (49 U.S.C. 24401(2)(A)), railroad safety technology (49 U.S.C. 20158), high-speed rail corridor planning (49 U.S.C. 26101(b)), and FRA-led multi-state planning (FY14 Omnibus). Subject to the type and quality of applications received, the FRA intends to award/allocate the funding made available by the FY14 Omnibus to projects under each of the eligible project types. However, the FRA is not predetermining specific dollar allocations among these project types.

In order to maximize the benefits of the amount of funding available, the FRA is choosing to further focus the broad project eligibilities allowed for under the appropriations acts to specific project types that align with FRA's current mission and objectives. Applications for projects under the ''intercity passenger rail capital'' category should focus on grade crossing improvement projects related to intercity passenger rail service; applications for projects under the ''railroad safety technology'' category should focus on positive train control (PTC) implementation projects; and applications for projects under the ''high-speed rail corridor planning'' category should focus on developing new or expanded Passenger Rail Corridor Investment Plans. Additional information of these more focused project types is contained in Section 3 of this notice and on the FY14 Grant Application Solicitation homepage at *www.fra.dot.gov/Page/P0701*.

1.4 Legislative Authority

The funding made available under this notice was appropriated from the following sources:

- Consolidated Appropriations Act, 2008 (Pub. L. 110–161, December 26, 2007);
- Omnibus Appropriations Act, 2009 (Pub. L. 111–8, March 11, 2009);
- Consolidated Appropriations Act, 2010 (Pub. L. 111–117, December 16, 2009); and
- Consolidated Appropriations Act, 2014 (Pub. L. 113–76, January 17, 2014).

The activities under the FY10 and FY14 funding are authorized by the Passenger Rail Investment and Improvement Act, 2008 (Pub. L. 110–432, October, 16, 2008). The activities under the FY08 and FY09 funding are authorized through their respective appropriations acts and do not have any underlying statutory authorization.

Section 2: Award Information

2.1 Application Limits

The FRA anticipates making multiple awards from the funding made available in this notice and is not predetermining any minimum or maximum dollar amounts for awards. However, given the relatively limited amount of funding that is currently available, applicants are encouraged to constrain their Federal funding requests to a maximum of $3,000,000 per application. While this $3,000,000 application limit is a recommendation and not a firm requirement, applications exceeding this $3,000,000 threshold must explain why any requested funding over $3,000,000 is necessary to implement the proposed project. Applicants for grade crossing projects in particular are advised to subdivide higher-cost undertakings into separate project components or discrete phases that demonstrate operational independence and public benefits in order to give FRA maximum flexibility in selecting projects or project components. Additionally, the FRA may choose to award a grant for less than the amount requested in the application.

FRA will make awards for projects selected under this notice through cooperative agreements. Cooperative agreements allow for greater Federal involvement in carrying out the agreed upon investment, including technical assistance, review of interim work products, and increased program oversight. The funding provided under these cooperative agreements will be made available to grantees on a reimbursable basis.

2.2 Application Review Process

Applications will proceed through a three-part review process:

1. Screening for completeness and eligibility;
2. Evaluation of eligible applications by technical panels applying the evaluation criteria; and
3. Project selection by the FRA Administrator applying additional selection criteria.

Each application will first be screened for eligibility (requirements outlined in Section 3 of this notice) and completeness (containing all required documentation outlined in Section 4 of this notice).

[1] Statements of interest for FRA-led multi-state planning are being requested separately and will not be accepted or considered through this solicitation. Additional information on this FRA-led planning process, including how to submit statements of interest, is available at *www.fra.dot.gov/Page/P0021*.

Eligible and complete applications will then be evaluated by technical panels consisting of subject-matter experts against the evaluation criteria (outlined in Section 3 of this notice). The FRA will not assign specific numerical scores to applications based on the evaluation criteria. Rather, ratings of ''highly recommended,'' ''recommended,'' ''acceptable,'' or ''not recommended'' will be assigned for each evaluation criterion upon which the applications are being reviewed.

The ratings assigned by the technical panels will not in themselves constitute the final award determination, as this is only the second step in the review process. All eligible and complete applications, regardless of the ratings they receive from the technical panels, will be advanced to the FRA Administrator for funding consideration. The FRA Administrator will also take into consideration several cross-cutting and comparative selection criteria (see Section 3.4 of this notice) to determine awards. The FRA will award funds to projects that are well-aligned with one or more of the evaluation and selection criteria. In addition, FRA will consider whether a project has a negative effect on any of the evaluation and selection criteria, and any such negative effect may reduce the likelihood that the project will be selected for award.

Section 3: Eligibility and Review Criteria

This notice solicits applications for three distinct project types, with funding appropriated from several sources. As such, there are varying minimum requirements that applications must meet related to applicant eligibility, project eligibility, cost sharing, and the fulfillment of other prerequisites. The differences among the three project types also necessitate that they be reviewed against separate evaluation criteria. Section 3.1 of this notice will cover the eligibility and review requirements for intercity passenger rail grade crossing improvement projects, Section 3.2 for positive train control implementation projects, and Section 3.3 for Passenger Rail Corridor Investment Plan projects. Section 3.4 of this notice will cover the additional selection criteria that will be applied to all applications by the FRA Administrator.

3.1 Intercity Passenger Rail Grade Crossing Improvement Projects

3.1.1 Applicant Eligibility

The following entities are eligible applicants for intercity passenger rail grade crossing improvement projects:

- States (including the District of Columbia);
- Groups of States;
- Interstate compacts; and
- Public agencies established by one or more States and having responsibility for providing intercity passenger rail service.

3.1.2 Project Eligibility

Eligible grade crossing projects must involve capital improvements to highway-rail grade crossings that are related to intercity passenger rail service. Applicants must demonstrate that a proposed project is both a capital improvement to a highway-rail grade crossing and that the project improves intercity passenger rail service. The following is a non-exhaustive list of eligible grade crossing projects:

- Safety and/or operational improvements at public or private grade crossings;
- Installation of or upgrades to crossing signal equipment;
- Crossing closures;
- Grade separations;
- Pedestrian crossing improvements;
- Track circuitry improvements to activate warning devices;
- Integration of crossing warning systems with advanced train control, signal preemption, and intelligent highway traffic control systems; and
- Other civil or utility projects that improve crossing surfaces, lighting, and sight distance.

3.1.3 Non-Federal Match Requirements and Other Funding Restrictions

As outlined in Section 1.3 of this notice, intercity passenger rail grade crossing projects are eligible to be funded from three separate sources of funding. Both the $19,827,500 made available by the FY14 Omnibus and the $5,200,000 in remaining FY10 HSIPR Program funding allow for up to an 80 percent Federal share of project costs. However, the remaining $11,300,000 in FY08/FY09 HSIPR Program funding limits the Federal share of project costs to 50 percent. The required 20 percent or 50 percent non-Federal match, depending on the funding source, may be composed of public sector (state or local) or private sector funding. However, the FRA cannot consider any other Federal funds, nor any non-Federal funds already expended (or otherwise encumbered), towards the matching requirement. Additionally, FRA is limiting the method for calculating the non-Federal match to cash contributions only—''in-kind'' contributions will not be accepted. Matching funds provided in excess of the minimum requirements will be considered in evaluating the merit of an application.

Applicants that propose a 50 percent non-Federal match will be more likely to have their applications selected for funding, as they will be eligible to receive funding under each of the three funding sources contained in this notice (and specifically the $11,300,000 in 50–50 match funding that is dedicated to grade crossing projects). However, these 50–50 match funds contain three eligibility restrictions that differ from the 80–20 match funds:

- States are the only eligible applicant type;
- Proposed projects must be specifically included in the applicant's Statewide Transportation Improvement Program (STIP) at the time of application to be eligible; and
- States must include intercity passenger rail services as an integral part of statewide transportation planning as required under 23 U.S.C. 135.

3.1.4 Evaluation Criteria

The FRA intends to award funds to grade crossing projects that achieve the maximum public benefits possible, given the amount of funding available. Analysis provided by applicants that quantifies the monetary value (whenever possible) of the anticipated public benefits of the proposed project will be particularly relevant to the FRA in evaluating applications.[2] The systematic process of comparing expected benefits and costs helps decision-makers organize information about, and evaluate trade-offs between, alternative transportation investments. The FRA will consider benefits and costs using standard data and qualitative information provided by applicants and will evaluate applications in a manner consistent with Executive Order 12893 (Principles for Federal Infrastructure Investments, 59 FR 4233), OMB Circular A–94

[2] Applicants are encouraged to reference Sections 1 and 2 of the Transportation Investment Generating Economic Recovery (TIGER) Benefit-Cost Analysis Resource Guide for recommended values to use in monetizing benefits and costs of transportation projects. This Resource Guide was developed by the U.S. Department of Transportation for use in the TIGER Discretionary Grant program and can be located on the FY14 Application Solicitation homepage at *www.fra.dot.gov/Page/P0701*.

(Guidelines and Discount Rates for Benefit-Cost Analysis of Federal Programs), and OMB Circular A–4 (Regulatory Analysis).

The FRA intends to analyze all grade crossing applications utilizing FRA's GradeDec tool to support the evaluation process. GradeDec is a web-based application and decision support tool intended for the identification and evaluation of highway-rail grade crossing upgrades, separations, and closures. The GradeDec tool was designed for the needs of Federal, state, and local authority decision makers, and employs benefit-cost methodologies to assess grade crossing investment alternatives at the corridor level or in a region. The modeling frameworks built into the GradeDec tool were developed by the FRA and include research findings from the Volpe National Transportation Systems Center and the National Cooperative Highway Research Program. Additional information on GradeDec is available at *www.fra.dot.gov/Page/P0337*.

Applications for intercity passenger rail grade crossing projects will be reviewed by panels of DOT subject-matter experts against the following three evaluation criteria.

Safety Benefits

The following factors will be considered in assessing a proposed project's achievement of safety benefits:

- The extent to which the proposed project will improve safety at a crossing or series of crossings where safety incidents have recently occurred or where a high potential exists for accidents between pedestrian and/or vehicle traffic and intercity passenger rail operations;
- Whether the proposed project will upgrade a crossing or a series of crossings to create a ''sealed corridor'' segment utilizing advanced warning technology, four-quadrant gates, or median separators—with preference to crossing closures;
- The proposed project's ability to foster a safe, connected, accessible transportation system for the multimodal movement of people and goods;
- The extent to which the proposed project conforms with FRA's ''High-Speed Passenger Rail Safety Strategy'' guidance that was published in November 2009 (*http://www.fra.dot.gov/eLib/Details/L03624*); and
- Where applicable, the extent to which the proposed project will improve the safety of transporting energy products on rail routes over which both intercity passenger rail and freight rail services operate.

Transportation Benefits

The following factors will be considered in assessing a proposed project's achievement of non-safety related transportation benefits:

- The extent to which the proposed project contributes to other improvements to intercity passenger rail operations, as reflected by estimated increases in operational reliability and on-time performance, increases in average and/or top operating speeds, increases in ridership, reductions in trip times, additional service frequencies, and other related factors;
- The extent to which a proposed project generates cross-modal benefits for commuter rail, freight rail (including ports served by freight rail), or highway operations and safety;
- The extent to which a proposed project benefits a ''state-supported'' intercity passenger rail service and enables state sponsors and their partners to invest in additional capital projects; and
- The extent to which the proposed project will mitigate mobility and access barriers for all modes of transportation—including bicycle and pedestrian enhancements—and better connect communities to centers of employment, education, and services (including for non-drivers) and that hold promise to stimulate long-term job growth, especially in economically distressed areas.

Project Development Approach

The following factors will be considered in assessing how the proposed project was planned and developed to date:

- The applicant's progress, at the time of application, in reaching compliance with the National Environmental Policy Act (NEPA) for the proposed project. Although a NEPA decision document (Record of Decision, Finding of No Significant Impact, Categorical Exclusion determination) is not required at the time of application, projects that utilize innovative project delivery approaches to expedite NEPA or are accompanied by a final NEPA determination will be looked upon favorably during the evaluation and selection process;
- The proposed project's consistency with an adopted service development plan and state rail plan;
- The quality and completeness of the proposed project's Statement of Work, including whether a sufficient level of detail regarding scope, schedule, and budget is provided to immediately advance the project to award;
- The level of support demonstrated for the application and proposed project from key project partners (letters of support are encouraged), including the infrastructure owning railroad, railroad operator, local governments, and other relevant stakeholders;
- The equitable financial participation from benefiting entities in the project's financing;
- The applicant's financial, legal, and technical capacity to implement the project; and
- Whether the engineering materials submitted with the application are of sufficient quality to assess the proposed project's design and constructability risks.

3.2 Positive Train Control Implementation Projects

3.2.1 Applicant Eligibility

The following entities are eligible applicants for positive train control implementation projects:

- Passenger and freight railroad carriers;
- Railroad suppliers; and
- State and local governments.

To be eligible for assistance, the above entities must have either received approval of the Technology Implementation Plans (TIP) and Positive Train Control Implementation Plans (PTCIP) required by 49 U.S.C. 20156(e)(2) and 20157, or demonstrate to the satisfaction of the FRA that they are currently developing the required plans where applicable. Preference will be given in the following order:

1. Entities that have completed and received FRA approval of both their TIP and PTCIP.
2. Entities that have completed and received FRA approval of their PTCIP.
3. Entities that have submitted their PTCIP to FRA for approval.
4. Entities that have certified to FRA progress towards completion of their PTCIP and TIP.
5. All other eligible entities.

Collaborative project submissions by freight and passenger carriers, suppliers, and State and local governments on eligible projects will be evaluated more favorably.

3.2.2 Project Eligibility

The FRA is soliciting applications for projects that will benefit the overall implementation of positive train control on freight, intercity passenger, and commuter railroads. Given that the amount of funding available is not likely sufficient to cover the costs necessary to deploy positive train control on any given railroad, applications should focus on the research and development of technologies that will lower the costs, speed implementation, increase

interoperability, and improve the reliability of positive train control systems.

The FRA is particularly interested in advancing research and development on the following topics related to positive train control: cybersecurity and wireless communications security, back-office reliability, and deployment of an Interoperable Train Control Messaging (ITCM/ITCSM) shared network for short lines and commuter railroads. Additional information on these suggested topic areas are located on the FY14 Application Solicitation homepage at *www.fra.dot.gov/Page/P0701.* Applicants should note that these topics represent suggested areas of interest by the FRA, and any otherwise eligible applications meeting the criteria above will be evaluated and considered for award.

3.2.3 Non-Federal Match Requirements

The $19,827,500 made available by the FY14 Omnibus is the only source of funding contained in this notice under which positive train control implementation projects may be funded. The FY14 Omnibus allows for up to an 80 percent Federal share of project costs. The required 20 percent non-Federal match may be composed of public sector (state or local) or private sector funding. However, the FRA cannot consider any other Federal funds, nor any non-Federal funds already expended (or otherwise encumbered), towards the matching requirement. Additionally, FRA is limiting the method for calculating the non-Federal match to cash contributions only—''in-kind'' contributions will not be accepted. Matching funds provided in excess of the minimum requirements will be considered in evaluating the merit of an application.

3.2.4 Evaluation and Selection Criteria

The FRA intends to award funds to positive train control implementation projects that achieve the maximum public benefits possible, given the amount of funding available. Analysis provided by applicants that quantifies the monetary value (whenever possible) of the anticipated public benefits of the proposed project will be particularly relevant to the FRA in evaluating applications.[3] The systematic process of comparing expected benefits and costs helps decision-makers organize information about, and evaluate trade-offs between, alternative transportation investments. The FRA will consider benefits and costs using standard data and qualitative information provided by applicants and will evaluate applications in a manner consistent with Executive Order 12893 (Principles for Federal Infrastructure Investments, 59 FR 4233), OMB Circular A–94 (Guidelines and Discount Rates for Benefit-Cost Analysis of Federal Programs), and OMB Circular A–4 (Regulatory Analysis).

Applications for positive train control implementation projects will be reviewed by panels of DOT subject-matter experts against the following three evaluation criteria.

PTC Deployment Benefits

The following factors will be considered in assessing a proposed project's achievement of PTC deployment benefits:

- The degree to which the successful implementation of the proposed idea would advance the technical deployment of PTC, including improvements to reliability, safety, security, and maintainability, among others issues; and
- The degree to which the successful implementation of the proposed idea would decrease PTC implementation and maintenance costs.

Technical Merit

The following factors will be considered in assessing a proposed project's technical merit:

- The degree to which proposed ideas exhibit a sound scientific and engineering basis;
- How well the proposed ideas could be practically applied in, and would be compatible with, the railroad environment; and
- The perceived likelihood of technical and practical success.

Project Development Approach

The following factors will be considered in assessing how the proposed project was planned and developed to date:

- The technical qualifications and demonstrated experience of key personnel proposed to lead and perform the technical efforts, and qualifications of primary and supporting organizations to fully and successfully execute the proposal plan within proposed timeframe and budget;
- The degree to which proposed effort is supported by multiple entities (letters of support are encouraged);
- The affordability and degree to which the proposed effort appears to be a good value for the amount of funding requested;
- The reasonableness and realism of the proposed costs; and
- The extent of proposed cost sharing or cost participation under the proposed effort (exclusive of the applicant's prior investment).

All evaluation criteria, when combined, are significantly more important than cost or price alone. Technical merit is appreciably more important than cost or price and, as such, greater consideration will be given to technical excellence rather than cost or price alone. An offer must be found acceptable under all applicable evaluation factors to be considered eligible for award. Awards will be made to applicants whose offers provide the best value to the Government in terms of technical excellence, cost or price, and performance risk to include consistency and accord with the objectives of the solicitation and FRA's expressed areas of interest.

3.3 Passenger Rail Corridor Investment Plans

3.3.1 Applicant Eligibility

The following entities are eligible applicants for Passenger Rail Corridor Investment Plan projects:

- States (including the District of Columbia);
- Groups of States;
- Interstate compacts; and
- Public agencies established by one or more States and having responsibility for providing intercity passenger rail service.

3.3.2 Project Eligibility

Passenger Rail Corridor Investment Plans consist of two distinct components: (1) A service development plan and (2) corridor-wide environmental documentation. Applicants requesting funding to develop a Passenger Rail Corridor Investment Plan must apply for any necessary work to develop *both* elements, the service development plan and corridor-wide environmental documentation. If the applicant has already completed one of these documents or a component thereof, FRA must have accepted that document as meeting the minimum requirements in order for the applicant to receive a grant to complete the remaining component(s). Similarly, applicants that have either already completed or are in the process of developing elements of a Passenger Rail Corridor Investment Plan through an FRA grant may request

[3] Applicants are encouraged to reference Sections 1 and 2 of the TIGER Benefit-Cost Analysis Resource Guide for recommended values to use in monetizing benefits and costs of transportation projects. This Resource Guide was developed by the U.S. Department of Transportation for use in the TIGER Discretionary Grant program and can be located on the FY14 Application Solicitation homepage at *www.fra.dot.gov/Page/P0701.*

additional Federal funding to expand the scope or geographic study area of the existing planning effort. However, any additional funding requested must result in a fully completed Passenger Rail Corridor Investment Plan. Additionally, pursuant to the FY14 Omnibus, corridor planning improvements grants are only available for passenger rail corridors that are not covered by a Tier 1 Environmental Impact Statement completed within the last ten years (since January 17, 2004). Further guidance on the required elements of a Passenger Rail Corridor Investment Plan is available on the FY14 Grant Application Solicitation homepage at *www.fra.dot.gov/Page/P0701*.

3.3.3 Non-Federal Match Requirements

The $19,827,500 made available by the FY14 Omnibus is the only source of funding contained in this notice under which Passenger Rail Corridor Investment Plans may be funded. The FY14 Omnibus required that the Secretary of Transportation make no less than $20,000,000 available for corridor planning. Although this requirement has already been met by the Department allocating $22,000,000 to complete NEC FUTURE (as described in Section 1.2 of this notice), the FRA intends to award funds from the $19,827,500 remaining for additional meritorious planning projects. The FY14 Omnibus allows for an up to 80 percent Federal share of project costs. The required 20 percent non-Federal match may be composed of public sector (state or local) or private sector funding. However, the FRA cannot consider any other Federal funds, nor any non-Federal funds already expended (or otherwise encumbered), towards the matching requirement. Additionally, FRA is limiting the method for calculating the non-Federal match to cash contributions only—''in-kind'' contributions will not be accepted. Matching funds provided in excess of the minimum requirements will be considered in evaluating the merit of an application.

3.3.4 Evaluation and Selection Criteria

The FRA intends to award funds to Passenger Rail Corridor Investment Plan projects that achieve the maximum public benefits possible, given the amount of funding available. Analysis provided by applicants that quantifies the monetary value (whenever possible) of the anticipated public benefits of the underlying projects of the Passenger Rail Corridor Investment Plan will be particularly relevant to the FRA in evaluating applications.[4] The systematic process of comparing expected benefits and costs helps decision-makers organize information about, and evaluate trade-offs between, alternative transportation investments. The FRA will consider benefits and costs using standard data and qualitative information provided by applicants and will evaluate applications in a manner consistent with Executive Order 12893 (Principles for Federal Infrastructure Investments, 59 FR 4233), OMB Circular A–94 (Guidelines and Discount Rates for Benefit-Cost Analysis of Federal Programs), and OMB Circular A–4 (Regulatory Analysis).

Applications for Passenger Rail Corridor Investment Plan projects will be reviewed by panels of DOT subject-matter experts against the following two evaluation criteria:

Potential Transportation and Other Public Benefits

The following factors will be considered in assessing a proposed project's potential achievement of transportation and other public benefits:

- The clarity and detail with which the applicant has identified the need to be addressed by the proposed service;
- The market potential of the corridor being studied, taking into consideration such factors as population demographics, density, economic activity, and travel patterns;
- The potential for the corridor investment to deliver high-speed and intercity passenger rail service benefits, including ridership, on-time performance reliability, travel time, service frequencies, safety, and other factors;
- The extent to which the Passenger Rail Corridor Investment Plan will examine and evaluate non-transportation issues that could provide public benefits, including but not limited to land use, economic development, energy efficiency and environmental quality, transportation network resilience, social equity and environmental justice, and strengthening opportunities for upward socioeconomic mobility; and
- The consideration and integration of other transportation modes in the planning process and the proposed service's ability to foster a safe, connected, accessible transportation system for the multimodal movement of people and goods.

Future Program Viability and Sustainability

The following factors will be considered in assessing the potential viability and sustainability of the intercity passenger rail service under consideration in the Passenger Rail Corridor Investment Plan:

- The likelihood that the final deliverables (service development plan and environmental decision document) will be completed and of sufficient quality to be implemented upon completion of the proposed cooperative agreement;
- The demonstrated institutional commitment of the State and all other key stakeholders to quickly execute the program once planning is complete;
- The degree to which the planning process meaningfully incorporates input from affected communities, local governments, regional councils and planning organizations, neighboring States, railroads, transportation modal partners, environmental interests, workforce investment boards, the public and other stakeholders—early and throughout the process;
- The level of support demonstrated for the application, proposed study, and underlying projects from key project partners (letters of support are encouraged);
- The likelihood that the corridor(s) being studied can yield measurable service and public benefits in a reasonable period of time; and
- The demonstrated ability of the applicant and other project partners to support the future capital and operating needs of the corridor(s) being studied.

3.4 Selection Criteria

In addition to the evaluation criteria outlined above that is unique for each of the three project types covered by this notice, the FRA Administrator will apply the following selection criteria to further ensure that the projects selected for funding advance FRA's current mission and key priorities

Alignment with the DOT Strategic Goals and Priorities

- Improving transportation safety;
- Maintaining transportation infrastructure in a state of good repair;
- Promoting economic competitiveness;
- Advancing environmentally sustainable transportation policies;
- Furthering the six ''Livability Principles'' developed by DOT with the Department of Housing and Urban

[4] Applicants are encouraged to reference Sections 1 and 2 of the TIGER Benefit-Cost Analysis Resource Guide for recommended values to use in monetizing benefits and costs of transportation projects. This Resource Guide was developed by the U.S. Department of Transportation for use in the TIGER Discretionary Grant program and can be located on the FY14 Application Solicitation homepage at *www.fra.dot.gov/Page/P0701*.

Development and the Environmental Protection Agency as part of the Partnership for Sustainable Communities;[5]

• Enhancing quality of life; and

• Building ladders of opportunity to expand the middle class. Proposed projects and planning studies that demonstrate the ability to provide reliable, safe and affordable transportation choices to connect economically disadvantaged populations, non-drivers, senior citizens, and persons with disabilities in disconnected communities with employment, training and education will receive particular consideration during project selection.

Project Delivery Performance

• The applicant's track record in successfully delivering previous FRA and DOT grants on time, on budget, and for the full intended scope;

• The applicant's means for achieving satisfactory continuing control over project assets in a timely manner, including, but not limited to, public ownership of project assets or agreements with railroad operators and infrastructure owners at the time of application; and

• The extent to which the proposed project complements previous FRA or DOT awards.

Region/Location

• The extent to which the proposed project increases the economic productivity of land, capital, or labor at specific locations, particularly in economically distressed areas;

• Ensuring appropriate level of regional balance across the country;

• Ensuring consistency with national transportation and rail network objectives; and

• Ensuring integration with other rail services and transportation modes.

Innovation/Resource Development

• Pursuing new rail technologies that result in favorable public return on investment and ensure delivery of project benefits;

• Promoting innovations that demonstrate the value of new approaches to, among other things, transportation funding and finance, contracting, project delivery, congestion management, safety management, asset management, or long-term operations and maintenance;

• Advancing the state of the art in modeling techniques for assessing costs and benefits;

• Promoting domestic manufacturing, supply, and industrial development; and

• Developing professional railroad engineering, operating, planning, and management capacity.

Partnerships

• For projects that span multiple jurisdictions (States or local governments), emphasizing those that have organized multi-jurisdictional partnerships with joint planning and prioritization of investments;

• Strengthening human capital and workforce opportunities, particularly for low-income workers or for people in economically distressed areas;

• Employing creative approaches to ensure workforce diversity and use of disadvantaged and minority business enterprises, including opportunities for small businesses and disadvantaged business enterprises, including veteran-owned small businesses and service-disabled veteran-owned small businesses; and

• Engaging local communities and other stakeholder groups in the project in a way that offers an opportunity for meaningful engagement in the process.

Section 4: Application and Submission Information

4.1 Submission Dates and Times

Complete applications must be submitted to Grants.gov no later than 5:00 p.m. EDT, September 15, 2014. Applicants are strongly encouraged to apply early to ensure that all materials are received before this deadline.

4.2 Application Procedures

To apply for funding through Grants.gov, applicants must be properly registered. Complete instructions on how to register and submit an application can be found at Grants.gov. Registering with Grants.gov is a one-time process; however, it can take up to several weeks for first-time registrants to receive confirmation and a user password. FRA recommends that applicants start the registration process as early as possible to prevent delays that may preclude submitting an application package by the application deadline. Applications will not be accepted after the due date. Delayed registration is not an acceptable justification for an application extension.

In order to apply for funding under this announcement and to apply for funding through Grants.gov, all applicants are required to complete the following:

1. *Acquire a DUNS Number.* A Data Universal Numbering System (DUNS) number is required for Grants.gov registration. The Office of Management and Budget requires that all businesses and nonprofit applicants for Federal funds include a DUNS number in their applications for a new award or renewal of an existing award. A DUNS number is a unique nine-digit sequence recognized as the universal standard for identifying and keeping track of entities receiving Federal funds. The identifier is used for tracking purposes and to validate address and point of contact information for Federal assistance applicants, recipients, and sub recipients. The DUNS number will be used throughout the grant life cycle. Obtaining a DUNS number is a free, one-time activity. Applicants may obtain a DUNS number by calling 1–866–705–5711 or by applying online at *http://www.dnb.com/us*.

2. *Acquire or Renew Registration with the System for Award Management (SAM) Database.* All applicants for Federal financial assistance must maintain current registrations in the System for Award Management (SAM) database. An applicant must be registered in SAM to successfully register in Grants.gov. The SAM database is the repository for standard information about Federal financial assistance applicants, recipients, and sub recipients. Organizations that have previously submitted applications via Grants.gov are already registered with SAM, as it is a requirement for Grants.gov registration. Please note, however, that applicants must update or renew their SAM registration at least once per year to maintain an active status, so it is critical to check registration status well in advance of the application deadline. Information about SAM registration procedures can be accessed at *www.sam.gov*.

3. *Acquire an Authorized Organization Representative (AOR) and a Grants.gov Username and Password.* Applicants must complete an AOR profile on Grants.gov and create a username and password. Applicants must use the organization's DUNS number to complete this step. Additional information about the registration process is available at www.grants.gov/applicants/get_registered.jsp.

4. *Acquire Authorization for your AOR from the E-Business Point of Contact (E-Biz POC).* The Applicant's E-Biz POC must log in to Grants.gov to confirm a representative as an AOR. Please note that there can be more than one AOR at an organization.

5. *Search for the Funding Opportunity on Grants.gov.* The Catalog of Federal Domestic Assistance (CFDA) number for

[5] *http://www.sustainablecommunities.gov.*

this opportunity is 20.314, titled ''Railroad Development.''

6. *Submit an Application Addressing All of the Requirements Outlined in this Funding Availability Announcement.* After submitting the application through Grants.gov, a confirmation screen will appear on the applicant's computer screen. This screen will confirm that the applicant has submitted an application and provide a tracking number to track the status of the submission. Within 24 to 48 hours after submitting an electronic application, an applicant should receive an email validation message from Grants.gov. The validation message will explain whether the application has been received and validated or rejected, with an explanation. Applicants are urged to submit an application at least 72 hours prior to the due date of the application to allow time to receive the validation message and to correct any problems that may have caused a rejection notification.

If an applicant experiences difficulties at any point during this process, please call the Grants.gov Customer Center Hotline at 1–800–518–4726, 24 hours a day, 7 days a week (closed on Federal holidays).

Note: Please use generally accepted formats such as .pdf, .doc, .docx, .xls, .xlsx and .ppt, when uploading attachments. While applicants may imbed picture files, such as .jpg, .gif, and .bmp, in document files, please do not submit attachments in these formats. Additionally, the following formats will not be accepted: .com, .bat, .exe, .vbs, .cfg, .dat, .db, .dbf, .dll, .ini, .log, .ora, .sys, and .zip.

4.3 Content of Application

Required documents for the application package are outlined in the checklist below. Applicants are encouraged to visit the FY14 Grant Application Solicitation homepage on the FRA Web site to download the required Statement of Work template, FRA's Additional Assurances and Certifications, and the OMB Standard Forms. The FY14 Application Solicitation homepage also contains additional guidance on the application package and other relevant topics. The FY14 Grant Application Solicitation homepage is located at *www.fra.dot.gov/Page/P0701*. Detailed requirements for completing the Project Narrative are located below in Section 4.3.1. Brief overviews of the Statement of Work and Spatial Data submission requirements are provided in Sections 4.3.2 and 4.3.3, respectively.

Documents	Project Type		
	Grade Crossing improvements	PTC	Corridor investment plans
FRA Forms			
☐ Project Narrative (see 4.3.1)	✓	✓	✓
☐ Statement of Work (see 4.3.2)	✓	✓	✓
☐ Spatial Data (see 4.3.3)	✓		Optional
☐ FRA's Additional Assurances and Certifications	✓	✓	✓
OMB Standard Forms			
☐ SF 424: Application for Federal Assistance	✓	✓	✓
☐ SF 424A: Budget Information-Non Construction		✓	✓
☐ SF 424B: Assurances-Non Construction		✓	✓
☐ SF 424C: Budget Information-Construction	✓		
☐ SF 424D: Assurances-Construction	✓		
☐ SF LLL: Disclosure of Lobbying Activities	✓	✓	✓

Applicants must complete and submit all components of the application package. FRA welcomes the submission of other relevant supporting documentation that may have been developed by the applicant (planning, NEPA, engineering and design documentation, letters of support, etc.). In particular, applications accompanied by completed feasibility studies, environmental determinations, and cost estimates may be more favorably considered during the evaluation process, as they demonstrate that an applicant has a greater understanding of the scope and cost of the project.

Applicants should submit all application materials through Grants.gov. For any required or supporting application materials that an applicant is unable to submit via Grants.gov (such as oversized engineering drawings), an applicant may submit an original and two (2) copies to Mary Ann Mcnamara, Office of Program Delivery, Federal Railroad Administration, 1200 New Jersey Avenue SE., Mail Stop 20, Washington, DC 20590. However, due to delays caused by enhanced screening of mail delivered via the U.S. Postal Service, applicants are advised to use other means of conveyance (such as courier service) to assure timely receipt of materials.

4.3.1 Project Narrative

The following points describe the minimum content which will be required in the Project Narrative component of grant applications (additionally, FRA recommends that the Project Narrative generally adhere to the following outline). These requirements must be satisfied through a narrative statement submitted by the applicant, and may be supported by spreadsheet documents, tables, maps, drawings, and other materials, as appropriate. The Project Narrative may not exceed 25 pages in length (including any appendices). Applications containing Project Narratives that exceed this 25 page limitation will not be reviewed or considered for award.

The FRA recommends that applicants read this section carefully and submit all required information. In addition to the following nine standard elements that must be included in all Project Narratives, applications for intercity passenger rail grade crossing improvement projects have additional unique requirements that must be addressed in the Project Narrative. These additional requirements are outlined following the standard Project Narrative elements below:

1. Include a title page that lists the following elements in either a table or formatted list: project title, location (city, State, district), type of application

(e.g. grade crossing improvement, positive train control implementation, Passenger Rail Corridor Investment Plan), the applicant organization name, the name of any co-applicants, and the amount of Federal funding requested and the proposed non-Federal match.

2. Designate a point of contact for the applicant and provide his or her name and contact information, including phone number, mailing address and email address. The point of contact must be an employee of an eligible applicant.

3. Indicate the amount of Federal funding requested, the proposed non-Federal match, and total project cost. Additionally, identify any other sources of Federal funds committed to the project, as well as any pending Federal requests. Make sure to also note if the requested Federal funding must be obligated or expended by a certain date due to dependencies or relationships with other Federal or non-Federal funding sources, related projects, or other factors. Finally, specify whether Federal funding has ever previously been sought for the project and not secured, and name the Federal program and fiscal year from which the funding was requested.

4. Explain how the applicant meets the respective applicant eligibility criteria for the type of funding requested, as outlined in Section 3 of this notice.

5. Provide a brief 4–6 sentence summary of the proposed project, capturing the transportation challenges the proposed project aims to address, as well as the intended outcomes and anticipated benefits that will result from the proposed project.

6. Include a detailed project description that expands upon the brief summary required above. This detailed description should provide, at a minimum, additional background on the transportation challenges the project aims to address, the expected users and beneficiaries of the project, the specific components and elements of the project, and any other information the applicant deems necessary to justify the proposed project. The detailed description should also clearly explain how the proposed project meets the respective project eligibility criteria for the type of funding requested, as outlined in Section 3 of this notice.

7. Include a thorough discussion of how the project meets all of the evaluation criteria for the respective project type, as outlined in Section 3 of this notice. Applicants should note that FRA reviews applications based upon the evaluation criteria. If an application does not sufficiently address the evaluation criteria, it is unlikely to be a competitive application. In responding to the criteria, applicants are reminded to clearly identify, quantify, and compare expected benefits and costs of proposed projects. The FRA understands that the level of detail and sophistication of analysis that should be expected for relatively small projects (i.e., those encouraged to be limited to under $3,000,000 in this notice) is less than for larger, multi-million dollar, investments.

8. Describe proposed project implementation and project management arrangements. Include descriptions of the expected arrangements for project contracting, contract oversight, change-order management, risk management, and conformance to Federal requirements for project progress reporting.

9. Describe anticipated environmental or historic preservation impacts associated with the proposed project (or underlying projects for Passenger Rail Corridor Investment Plans), any environmental or historic preservation analyses that have been prepared, and progress toward completing any environmental documentation or clearance required for the proposed project under the National Environmental Policy Act (NEPA), the National Historic Preservation Act (NHPA), section 4(f) of the DOT Act, the Clean Water Act, or other applicable Federal or State laws. Applicants and grantees under FRA's financial assistance programs are encouraged to contact FRA and obtain preliminary direction regarding the appropriate NEPA class of action and required environmental documentation. Generally, projects will be ineligible to receive funding if they have begun construction activities prior to the applicant/grantee receiving written approval from FRA that all environmental and historical analyses have been completed. Additional information regarding FRA's environmental processes and requirements can be located on the FY14 Grant Application Solicitation homepage at *www.fra.dot.gov/Page/P0701*.

Additional Project Narrative Requirements for Intercity Passenger Rail Grade Crossing Improvement Applications

In addition to the nine standard Project Narrative elements required above, applicants for intercity passenger rail grade crossing improvement projects must specify the following location and crossing characteristics of the proposed grade crossing project (if the proposed project involves multiple crossings, the following information must be provided for each crossing):

- Locality—City/town, county, and cross streets;
- Right-of-Way Owner—Railroad right-of-way owner/host railroad, railroad milepost number, and DOT crossing inventory number;
- Crossing Characteristics—Number of railroad tracks, number of roadway traffic lanes, existing traffic control devices, average annual daily traffic (and year calculated), volume of truck traffic, and the history of train-vehicle and train-pedestrian accidents at the crossing (including fatalities);
- Rail Service Characteristics—Existing and planned rail services within the project boundaries (freight, commuter, and intercity passenger rail service), name of the corresponding service operators, existing and planned top operating speeds, and average number of daily one-way train operations (i.e. one daily round trip should be counted as two daily one-way operations); and
- Areas of significant concern—Schools, hospitals, first responders, or other emergency services providers in the vicinity of the crossing.

4.3.2 Statement of Work

Applicants are required to submit a Statement of Work (SOW) that addresses the scope, schedule, and budget for the proposed project if it were to be selected for award. The SOW should contain sufficient detail so that both FRA and the applicant can understand the expected outcomes of the proposed work to be performed and monitor progress toward completing project tasks and deliverables during a prospective grant's period of performance. The FRA has developed SOW templates for each of the three project types covered under this notice that applicants must adhere to if they wish to be considered for award. The SOW templates are located on the FY14 Grant Application Solicitation homepage at *www.fra.dot.gov/Page/P0701*.

4.3.3 Spatial Data

Applicants for intercity passenger rail grade crossing improvement projects are required to submit spatial data concerning their proposed projects to the FRA. This data allows the FRA to quickly orient the locations of grade crossings on the railroad and surrounding environment, and will assist the FRA in the review of applications. While not required, applicants for Passenger Rail Corridor Investment Plans are also encouraged to

submit spatial data for any potential routes under consideration in the planning study, if known. Spatial data must be submitted to the FRA through grants.gov in either shapefile or Keyhole Markup Language (KML) file formats, utilizing the World Geodetic System (WGS) 84 datum standard. Additional guidance and instructions concerning the submission of spatial data is available on the FY14 Grant Application Solicitation homepage at *www.fra.dot.gov/Page/P0701*.

Section 5: Award Administration Information

5.1 Award Notices

Applications selected for funding will be announced after the application review period. FRA will contact applicants with successful applications after announcement with information and instructions about the award process. Notification of a selected application is not an authorization to begin proposed project activities.

The period of performance for grants awarded under this notice is dependent upon the project and will be determined on a grant-by-grant basis. Extensions to the period of performance will be considered only through written requests to the FRA with specific and compelling justifications for why an extension is required. Any obligated funding that has not been spent by the grantee and reimbursed by the FRA upon completion of the grant will be deobligated.

5.2 Administrative and National Policy Requirements

The grantee and any subgrantee must comply with all applicable laws and regulations. A non-exclusive list of administrative and national policy requirements that grantees must follow includes: Procurement standards, compliance with Federal civil rights laws and regulations, disadvantaged business enterprises (DBE), debarment and suspension, drug-free workplace, FRA's and OMB's Assurances and Certifications, Americans with Disabilities Act (ADA), labor standards, safety oversight, environmental protection, National Environmental Policy Act (NEPA), environmental justice, and Buy America or Buy American provisions (as applicable).

5.3 General Requirements

The grantee must comply with all post-award reporting, auditing, monitoring, and close-out requirements, as described on the FY14 Grant Application Solicitation homepage at *www.fra.dot.gov/Page/P0701*.

Section 6: Agency Contact

For further information regarding this notice and the grants program, please contact Mary Ann McNamara, Office of Program Delivery, Federal Railroad Administration, 1200 New Jersey Avenue SE., Mail Stop 20, Washington, DC 20590; Email: *maryann.mcnamara@dot.gov*; Phone: (202) 493–6393; Fax: (202) 493–6333.

Authority: Sec. 192, Pub. L. 113–76, 128 Stat. 603; Pub. L. 111–117, 123 Stat. 3056–57; Pub. L. 111–8, 123 Stat. 934–5; Pub. L. 110–161, 121 Stat. 2393–4.

Corey Hill,

Director, Office of Program Delivery.

[FR Doc. 2014–16172 Filed 7–10–14; 8:45 am]

BILLING CODE 4910–06–P

DEPARTMENT OF TRANSPORTATION

Surface Transportation Board

[Docket No. FD 35820]

Blue Ridge Southern Railroad, L.L.C.—Acquisition Exemption—Norfolk Southern Railway Company

Blue Ridge Southern Railroad, L.L.C. (BLU)[1], a noncarrier, has filed a verified notice of exemption under 49 CFR 1150.31 to acquire from Norfolk Southern Railway Company (NSR), and to operate, three rail lines in the State of North Carolina comprising a total distance of approximately 91.8 miles extending between (1) milepost T0.0 at Murphy Jct., and milepost T47.0 at Dillsboro; (2) milepost W1.0 at Asheville, and milepost W26.0 at East Flat Rock; and (3) milepost TR0.0 at Henderson, and milepost TR19.8 at Pisgah Forest.

This transaction is related to a concurrently filed verified notice of exemption in *Watco Holdings, Inc.—Continuance in Control Exemption—Blue Ridge Southern Railroad, L.L.C.,* Docket No. FD 35821, wherein Watco Holdings, Inc. seeks Board approval under 49 CFR 1180.2(d)(2) to continue in control of BLU, upon BLU's becoming a Class III rail carrier.

BLU states that the agreement between BLU and NSR does not contain any provision that prohibits BLU or may limit future interchange traffic with a third-party connecting carrier.

BLU has certified that its projected annual revenues as a result of this transaction will not result in BLU's becoming a Class II or Class I rail carrier. Because BLU's projected annual revenues will exceed $5 million, BLU certified to the Board on May 9, 2014, that it had complied with the requirements of 49 CFR 1150.32(e) by providing notice to employees and their labor union on the affected 91.8-mile line.

This transaction may be consummated on or after July 25, 2014, the effective date of the exemption (30 days after the exemption was filed).

If the notice contains false or misleading information, the exemption is void *ab initio.* Petitions to revoke the exemption under 49 U.S.C. 10502(d) may be filed at any time. The filing of a petition to revoke will not automatically stay the effectiveness of the exemption. Petitions for stay must be filed no later than July 18, 2014 (at least seven days before the exemption becomes effective).

An original and 10 copies of all pleadings, referring to Docket No. FD 35820 must be filed with the Surface Transportation Board, 395 E Street SW., Washington, DC 20423–0001. In addition, one copy of each pleading must be served on Karl Morell, Ball Janik LLP, 655 Fifteenth Street NW., Suite 225,Washington, DC 20005.

Board decisions and notices are available on our Web site at *WWW.STB.DOT.GOV*

Decided: July 8, 2014.

By the Board, Rachel D. Campbell, Director, Office of Proceedings.

Raina S. White,

Clearance Clerk.

[FR Doc. 2014–16276 Filed 7–10–14; 8:45 am]

BILLING CODE 4915–01–P

DEPARTMENT OF TRANSPORTATION

Surface Transportation Board

[Docket No. FD 35821]

Watco Holdings, Inc.—Continuance in Control Exemption—Blue Ridge Southern Railroad, L.L.C.

Watco Holdings, Inc. (Watco), a noncarrier, has filed a verified notice of exemption pursuant to 49 CFR 1180.2(d)(2) to continue in control of Blue Ridge Southern Railroad, L.L.C. (BLU), upon BLU's becoming a Class III rail carrier. Watco owns, indirectly, 100 percent of the issued and outstanding stock of BLU, a limited liability company.

This transaction is related to a concurrently filed verified notice of exemption in *Blue Ridge Southern Railroad, L.L.C.—Acquisition Exemption—Norfolk Southern Railway Company,* Docket No. FD 35820, wherein BLU seeks Board approval to acquire and operate approximately 91.8

[1] BLU is a wholly owned subsidiary of Watco Holdings, Inc.

miles of rail line owned by Norfolk Southern Railway Company between specified points in North Carolina.

The transaction may be consummated on or after July 25, 2014, the effective date of the exemption (30 days after the notice of exemption was filed).

Watco is a Kansas corporation that currently controls, indirectly, one Class II rail carrier, operating in two states, and 28 Class III rail carriers, operating in 19 states. For a complete list of these rail carriers, and the states in which they operate, see Watco's notice of exemption filed on June 25, 2014. The notice is available on the Board's Web site at ''*WWW.STB.DOT.GOV*.''

Watco represents that: (1) The rail lines to be operated by BLU do not connect with any of the rail lines operated by the carriers in the Watco corporate family; (2) the continuance in control is not a part of a series of anticipated transactions that would result in such a connection; and (3) the transaction does not involve a Class I carrier. Therefore, the transaction is exempt from the prior approval requirements of 49 U.S.C. § 11323. *See* 49 CFR 1180.2(d)(2).

Watco states that the purpose of the transaction is to reduce overhead expenses, coordinate billing, maintenance, mechanical, and personnel policies and practices of its rail carrier subsidiaries and thereby improve the overall efficiency of rail service provided by the railroads in the Watco corporate family.

Under 49 U.S.C. 10502(g), the Board may not use its exemption authority to relieve a rail carrier of its statutory obligation to protect the interests of its employees. Because the transaction involves the control of one Class II and one or more Class III rail carriers, the transaction is subject to the labor protection requirements of 49 U.S.C. 11326(b) and *Wisconsin Central Ltd.—Acquisition Exemption—Lines of Union Pacific Railroad,* 2 S.T.B. 218 (1997).

If the verified notice contains false or misleading information, the exemption is void *ab initio.* Petitions to revoke the exemption under 49 U.S.C. 10502(d) may be filed at any time. The filing of a petition to revoke will not automatically stay the effectiveness of the exemption. Petitions for stay must be filed by July 18, 2014 (at least seven days before the exemption becomes effective).

An original and 10 copies of all pleadings, referring to Docket No. FD 35821, must be filed with the Surface Transportation Board, 395 E Street SW., Washington, DC 20423–0001. In addition, a copy of each pleading must be served on Karl Morell, Ball Janik LLP, 655 Fifteenth Street NW., Suite 225, Washington, DC 20005.

Board decisions and notices are available on our Web site at ''*WWW.STB.DOT.GOV*.''

Decided: July 8, 2014.

By the Board, Rachel D. Campbell, Director, Office of Proceedings.

Raina S. White,

Clearance Clerk.

[FR Doc. 2014–16277 Filed 7–10–14; 8:45 am]

BILLING CODE 4915–01–P

DEPARTMENT OF VETERANS AFFAIRS

[OMB Control No. 2900–0744]

Proposed Information Collection (Call Center Satisfaction Survey): Comment Request

AGENCY: Veterans Benefits Administration, Department of Veterans Affairs.

ACTION: Notice.

SUMMARY: The Veterans Benefits Administration (VBA), Department of Veterans Affairs (VA), is announcing an opportunity for public comment on the proposed collection of certain information by the agency. Under the Paperwork Reduction Act (PRA) of 1995, Federal agencies are required to publish notice in the **Federal Register** concerning each proposed collection of information, including each proposed revision of a currently approved collection, and allow 60 days for public comment in response to the notice. This notice solicits comments for information needed from Veterans regarding their recent experience in contacting VA call centers.

DATES: Written comments and recommendations on the proposed collection of information should be received on or before September 9, 2014.

ADDRESSES: Submit written comments on the collection of information through Federal Docket Management System (FDMS) at *www.Regulations.gov* or to Nancy J. Kessinger, Veterans Benefits Administration (20M35), Department of Veterans Affairs, 810 Vermont Avenue NW, Washington, DC 20420 or email: *nancy.kessinger@va.gov.* Please refer to ''OMB Control No. 2900–0744'' in any correspondence. During the comment period, comments may be viewed online through FDMS.

FOR FURTHER INFORMATION CONTACT: Nancy J. Kessinger at (202) 632–8924 or FAX (202) 632–8925.

SUPPLEMENTARY INFORMATION: Under the PRA of 1995 (Public Law 104–13; 44 U.S.C. 3501–3521), Federal agencies must obtain approval from the Office of Management and Budget (OMB) for each collection of information they conduct or sponsor. This request for comment is being made pursuant to Section 3506(c)(2)(A) of the PRA.

With respect to the following collection of information, VBA invites comments on: (1) Whether the proposed collection of information is necessary for the proper performance of VBA's functions, including whether the information will have practical utility; (2) the accuracy of VBA's estimate of the burden of the proposed collection of information; (3) ways to enhance the quality, utility, and clarity of the information to be collected; and (4) ways to minimize the burden of the collection of information on respondents, including through the use of automated collection techniques or the use of other forms of information technology.

Title: VBA Call Center Satisfaction Survey.

OMB Control Number: 2900–0744.

Type of Review: Revision of a currently approved collection.

Abstract: VBA maintains a commitment to improve the overall quality of service for Veterans. Feedback from Veterans regarding their recent experience to the VA call centers will provide VBA with three key benefits to: (1) Identify what is most important to Veterans; (2) determine what to do to improve the call center experience; and (3) serve to guide training and/or operational activities aimed at enhancing the quality of service provided to Veterans and active duty personnel.

Affected Public: Individuals or households.

Estimated Annual Burden: 3,600 hours.

Estimated Average Burden Per Respondent: 6 minutes.

Frequency of Response: On occasion.

Estimated Number of Respondents: 36,000.

Dated: July 7, 2014.

By direction of the Secretary.

Crystal Rennie,

Department Clearance Officer, U. S. Department of Veterans Affairs.

[FR Doc. 2014–16160 Filed 7–10–14; 8:45 am]

BILLING CODE 8320–01–P

FEDERAL REGISTER

Vol. 79 Friday,

No. 133 July 11, 2014

Part II

Department of Health and Human Services

Centers for Medicare & Medicaid Services

42 CFR Parts 405, 411, 413, et al.

Medicare Program; End-Stage Renal Disease Prospective Payment System, Quality Incentive Program, and Durable Medical Equipment, Prosthetics, Orthotics, and Supplies; Proposed Rule

DEPARTMENT OF HEALTH AND HUMAN SERVICES

Centers for Medicare & Medicaid Services

42 CFR Parts 405, 411, 413 and 414

[CMS–1614–P]

RIN 0938–AS13

Medicare Program; End-Stage Renal Disease Prospective Payment System, Quality Incentive Program, and Durable Medical Equipment, Prosthetics, Orthotics, and Supplies

AGENCY: Centers for Medicare & Medicaid Services (CMS), HHS.

ACTION: Proposed rule.

SUMMARY: This rule proposes to update and make revisions to the End-Stage Renal Disease (ESRD) prospective payment system (PPS) for calendar year (CY) 2015. This rule also proposes to set forth requirements for the ESRD quality incentive program (QIP), including payment years (PYs) 2017 and 2018. This rule also proposes to make a technical correction to remove outdated terms and definitions. In addition, this rule proposes to set forth the methodology for adjusting Durable Medical Equipment, Prosthetics, Orthotics, and Supplies (DMEPOS) fee schedule payment amounts using information from the Medicare DMEPOS Competitive Bidding Program (CBP); make alternative payment rules for DME and enteral nutrition under the Medicare DMEPOS CBP; clarify the statutory Medicare hearing aid coverage exclusion and specify devices not subject to the hearing aid exclusion; update the definition of minimal self-adjustment regarding what specialized training is needed by suppliers to provide custom fitting services if they are not certified orthotists; clarify the Change of Ownership (CHOW) and provides for an exception to the current requirements; revise the appeal provisions for termination of a contract and notification to beneficiaries under the Medicare DMEPOS CBP, and add a technical change related to submitting bids for infusion drugs under the Medicare DMEPOS CBP.

DATES: To be assured consideration, comments must be received at one of the addresses provided below, no later than 5 p.m. E.S.T. on September 2, 2014.

ADDRESSES: In commenting, please refer to file code CMS–1614–P. Because of staff and resource limitations, we cannot accept comments by facsimile (FAX) transmission.

You may submit comments in one of four ways (please choose only one of the ways listed):

1. *Electronically.* You may submit electronic comments on this regulation to *http://www.regulations.gov.* Follow the ''Submit a comment'' instructions.

2. *By regular mail.* You may mail written comments to the following address ONLY: Centers for Medicare & Medicaid Services, Department of Health and Human Services, Attention: CMS–1614–P, P.O. Box 8010, Baltimore, MD 21244–8010.

Please allow sufficient time for mailed comments to be received before the close of the comment period.

3. *By express or overnight mail.* You may send written comments to the following address ONLY: Centers for Medicare & Medicaid Services, Department of Health and Human Services, Attention: CMS–1614–P, Mail Stop C4–26–05, 7500 Security Boulevard, Baltimore, MD 21244–1850.

4. *By hand or courier.* Alternatively, you may deliver (by hand or courier) your written comments ONLY to the following addresses prior to the close of the comment period: a. For delivery in Washington, DC—Centers for Medicare & Medicaid Services, Department of Health and Human Services, Room 445–G, Hubert H. Humphrey Building, 200 Independence Avenue SW., Washington, DC 20201.

(Because access to the interior of the Hubert H. Humphrey Building is not readily available to persons without Federal government identification, commenters are encouraged to leave their comments in the CMS drop slots located in the main lobby of the building. A stamp-in clock is available for persons wishing to retain a proof of filing by stamping in and retaining an extra copy of the comments being filed.)

b. For delivery in Baltimore, MD—Centers for Medicare & Medicaid Services, Department of Health and Human Services, 7500 Security Boulevard, Baltimore, MD 21244–1850.

If you intend to deliver your comments to the Baltimore address, call telephone number (410) 786–9994 in advance to schedule your arrival with one of our staff members.

Comments erroneously mailed to the addresses indicated as appropriate for hand or courier delivery may be delayed and received after the comment period.

For information on viewing public comments, see the beginning of the **SUPPLEMENTARY INFORMATION** section.

FOR FURTHER INFORMATION CONTACT: Stephanie Frilling, (410) 786–4507, for issues related to the ESRD PPS, the ESRD PPS CY 2015 Base Rate and Payment for Frequent Hemodialysis.

Michelle Cruse, (410) 786–7540, for issues related to the ESRD PPS and the Low Volume Payment Adjustment.

Karen Reinhardt, (410) 786–0189, for issues related to the ESRD PPS and the Outlier Payment Policy.

Wendy Tucker, (410) 786–3004, for issues related to the ESRD PPS and Wage Index.

Heidi Oumarou, (410) 786–7342, for issues related to the ESRD PPS Market Basket Update.

Anita Segar, (410) 786–4614, for issues related to the ESRD QIP.

Christopher Molling (410) 786–6399 and Hafsa Vahora (410) 786–7899 for issues related to the methodology for making national price adjustments based upon information gathered from the DMEPOS CBP.

Sandhya Gilkerson, (410) 786–4085, for issues related to the alternative payment methodologies under the CBP.

Sandhya Gilkerson, (410) 786–4085 and Michelle Peterman, 410–786–2581 for issues related to the clarification of the statutory Medicare hearing aid coverage exclusion.

Michelle Peterman, (410) 786–2591 for issues related to the definition of minimal self-adjustment at 414.402.

Janae James (410) 786–0801 for issues related to CHOW and breach of contract appeals.

SUPPLEMENTARY INFORMATION:

Inspection of Public Comments: All comments received before the close of the comment period are available for viewing by the public, including any personally identifiable or confidential business information that is included in a comment. We post all comments received before the close of the comment period on the following Web site as soon as possible after they have been received: *http://www.regulations.gov.* Follow the search instructions on that Web site to view public comments.

Comments received timely will also be available for public inspection as they are received, generally beginning approximately 3 weeks after publication of a document, at the headquarters of the Centers for Medicare & Medicaid Services, 7500 Security Boulevard, Baltimore, Maryland 21244, Monday through Friday of each week from 8:30 a.m. to 4 p.m. To schedule an appointment to view public comments, phone 1–800–743–3951.

Electronic Access

This **Federal Register** document is also available from the **Federal Register** online database through *Federal Digital System (FDsys),* a service of the U.S.

Government Printing Office. This database can be accessed via the internet at *http://www.gpo.gov/fdsys/.*

Addenda Are Only Available Through the Internet on the CMS Web site

In the past, a majority of the Addenda referred to throughout the preamble of our proposed and final rules were available in the **Federal Register**. However, the Addenda of the annual proposed and final rules will no longer be available in the **Federal Register**. Instead, these Addenda to the annual proposed and final rules will be available only through the Internet on the CMS Web site. The Addenda to the End-Stage Renal Disease (ESRD) Prospective Payment System (PPS) rules are available at: *http://www.cms.gov/ESRDPayment/PAY/list.asp.* Readers who experience any problems accessing any of the Addenda to the proposed and final rules of the ESRD PPS that are posted on the CMS Web site identified above should contact Stephanie Frilling at 410–786–4507.

Table of Contents

To assist readers in referencing sections contained in this preamble, we are providing a Table of Contents. Some of the issues discussed in this preamble affect the payment policies, but do not require changes to the regulations in the Code of Federal Regulations (CFR).

I. Executive Summary
A. Purpose
1. End-Stage Renal Disease (ESRD) Prospective Payment System (PPS)
2. End-Stage Renal Disease (ESRD) Quality Incentive Program (QIP)
3. Durable Medical Equipment, Prosthetics, Orthotics, and Supplies (DMEPOS)
B. Summary of the Major Provisions
1. ESRD PPS
2. ESRD QIP
3. DMEPOS
C. Summary of Costs and Benefits
1. Impacts of the Proposed ESRD PPS
2. Impacts for ESRD QIP
3. Impacts for DMEPOS
II. Calendar Year (CY) 2015 End-Stage Renal Disease (ESRD) Prospective Payment System (PPS)
A. Background on the End-Stage Renal Disease (ESRD) Prospective Payment System (PPS)
B. Routine Updates and Proposed Policy Changes to the CY 2015 ESRD PPS
1. ESRD PPS Base Rate
a. Changes to the Drug Utilization Adjustment
i. The Drug Utilization Adjustment Finalized in CY 2014 ESRD PPS Final Rule
ii. PAMA Changes to the Drug Utilization Adjustment
b. Payment Rate Update for CY 2015
c. CY 2015 ESRD PPS Wage Index Budget Neutrality Adjustment
d. Labor-Related Share
2. ESRD Bundled Market Basket and Labor-Related Share
a. Background
b. Rebasing and Revision the ESRD Bundled Market Basket
i. Cost Category Weights
ii. Proposed Price Proxies for the CY 2012 ESRDB Market Basket
iii. Proposed Market Basket Estimate for the CY 2015 ESRDB PPS Update
c. Proposed Productivity Adjustment
d. Calculation of the Proposed ESRDB Market Basket Update, Adjusted for Multifactor Productivity for CY 2015
e. Labor-Related Share
3. The Proposed CY 2015 ESRD PPS Wage Indices
a. Background
b. Proposed Implementation of New Labor Market Delineations
c. Transition Period
4. Proposed Revisions to the Outlier Policy
a. Proposed Changes to the Outlier Services MAP Amounts and Fixed Dollar Loss Amounts
b. Outlier Policy Percentage
C. Restatement of Policy Regarding Reporting and Payment for More than Three Dialysis Treatments per Week –
1. Reporting More than Three Dialysis Treatments per Week on Claims
2. Medical Necessity for More Than Three Treatments per Week
D. Delay of Payment for Oral-Only Drugs under the ESRD PPS
E. ESRD Drug Categories Included in the ESRD PPS Base Rate
F. Low-Volume Payment Adjustment (LVPA)
1 . Background
2. The United States Government Accountability Office Study on the LVPA
a. The GAO's Main Findings
b. The GAO's Recommendations
3. Clarification of the LVPA Policy
a. Hospital-Based ESRD Facilities
b. Cost Reporting Periods Used for Eligibility
G. Continued Use of ICD–9–CM Codes and Corrections to the ICD–10–CM Codes Eligible for the Comorbidity Payment Adjustment
III. End-Stage Renal Disease (ESRD) Quality Incentive Program (QIP)
A. Background
B. Considerations in Updating and Expanding Quality Measures under the ESRD QIP
C. Web sites for Measure Specifications
D. Updating the NHSN Bloodstream Infection in Hemodialysis Outpatients Clinical Measure for the PY 2016 ESRD QIP and Future Payment Years
E. Oral-Only Drugs Measures in the ESRD QIP
F. Proposed Requirements for the PY 2017 ESRD QIP
1. Proposed Revision to the Expanded ICH CAHPS Reporting Measure
2. Proposed Measures for the PY 2017 ESRD QIP
a. PY 2016 Measures Continuing in PY 2017 and Future Payment Years
b. Proposal to Determine when a Measure is ''Topped-Out'' in the ESRD QIP, and Proposal to Remove a Topped-Out Measure from the ESRD QIP, Beginning with PY 2017
c. New Measures Proposed for PY 2017 and Future Payment Years
i. Proposed Standardized Readmission Ratio (SRR) Clinical Measure
3. Proposed Performance Period for the PY 2017 ESRD QIP
4. Proposed Performance Standards, Achievement Thresholds, and Benchmarks for the PY 2017 ESRD QIP
a. Proposed Performance Standards, Achievement Thresholds, and Benchmarks for the Clinical Measures in the PY 2017 ESRD QIP
b. Estimated Performance Standards, Achievement Thresholds, and Benchmarks for the Clinical Measures Proposed for the PY 2017 ESRD QIP
c. Proposed Performance Standards for the PY 2017 Reporting Measures
5. Proposal for Scoring the PY 2017 ESRD QIP Measures
a. Scoring Facility Performance on Clinical Measures Based on Achievement
b. Scoring Facility Performance on Clinical Measures Based on Improvement
6. Weighting the Total Performance Score
7. Proposed Minimum Data for Scoring Measures for the PY 2017 ESRD QIP and Proposal for Changing Attestation Process for Patient Minimums
8. Proposed Payment Reductions for the PY 2017 ESRD QIP
9. Proposal for Data Validation
10. Proposal to Monitor Access to Dialysis Facilities
11. Proposed Extraordinary Circumstances Exception
G. Proposed Requirements for the PY 2018 ESRD QIP Beginning in PY 2018
1. Proposal to Modify the Mineral Metabolism Reporting Measure
2. Proposed New Measures for the PY 2018 ESRD QIP and Future Payment Years
a. Proposed Standardized Transfusion Ratio (STrR) Clinical Measure
b. Proposal to Adopt the Pediatric Peritoneal Dialysis Adequacy Clinical Measure and Add the Proposed Measure to the Dialysis Adequacy Measure Topic
c. Proposed ICH CAHPS Clinical Measure
d. Proposed Screening for Clinical Depression and Follow-Up Reporting Measure
e. Proposed Pain Assessment and Follow-Up Reporting Measure
f. Proposed NHSN Healthcare Personnel Influenza Vaccination Reporting Measure
2. Proposed Performance Period for the PY 2018 ESRD QIP
3. Proposed Performance Standards, Achievement Thresholds, and Benchmarks for the PY 2018 ESRD QIP
a. Proposed Performance Standards, Achievement Thresholds, and Benchmarks for the Clinical Measures in the PY 2018 ESRD QIP
b. Estimated Performance Standards, Achievement Thresholds, and Benchmarks for the Clinical Measures Proposed for the PY 2018 ESRD QIP
c. Proposed Performance Standards for the PY 2018 Reporting Measures

4. Proposal for Scoring the PY 2018 ESRD QIP Measures
a. Scoring Facility Performance on Clinical Measures Based on Achievement
b. Scoring Facility Performance on Clinical Measures Based on Improvement
c. Proposal for Scoring the ICH CAHPS Clinical Measure
d. Proposals for Calculating Facility Performance on Reporting Measures
5. Proposed Minimum Data for Scoring Measures for the PY 2018 ESRD QIP
6. Proposal for Calculating the Clinical Measure Domain Score
7. Proposal for Calculating the Reporting Measure Domain Score, the Reporting Measure Adjuster, and the TPS for the PY 2018 ESRD QIP
8. Example of the Proposed PY 2018 ESRD QIP Scoring Methodology
H. Future Considerations for Stratifying ESRD QIP Measures for Dual-Eligible Beneficiaries
IV. Technical Corrections for 42 Part 405
V. Methodology for Adjusting DMEPOS Payment Amounts using Information from Competitive Bidding Programs
A. Background
1. Payment Basis for Certain DMEPOS
2. Fee Schedule Payment Methodologies
3. Regional Fee Schedule Payment Methodology for P&O
4. DMEPOS Competitive Bidding Programs Payment Rules
5. Adjusting Payment Amounts using Information from the DMEPOS Competitive Bidding Program
6. Diversity of Costs
7. Advanced Notice of Proposed Rulemaking
B. Proposed Provisions
1. Proposed Regional Adjustments Limited by National Parameters
a. Regional Payment Adjustments
1. P&O Regional Fee Weights—CMS Region 1 (Boston) (Weighted by Total Paid Claims for Dates of Service from July 1, 1991, thru June 30, 1992)
b. National Parameters
c. Rural and Frontier State Adjustments
d. Areas Outside the Contiguous United States
2. Methodology for Items and Services Included in Limited Number of Competitive Bidding Programs
3. Adjusted Payment Amounts for Accessories used with Different Types of Base Equipment
4. Adjustments to Single Payment Amounts that Result from Unbalanced Bidding
5. National Mail Order Program—Northern Mariana Islands
6. Updating Adjusted Payment Amounts
7. Summary of Proposed Methodologies
VI. Proposed Payment Methodologies and Payment Rules for Durable Medical Equipment and Enteral Nutrition Furnished under the Competitive Bidding Program
A. Background
B. Proposed Provisions
1. Payment on a continuous rental basis for select items
a. Enteral nutrition
b. Oxygen and oxygen equipment
c. Standard manual wheelchairs
d. Standard power wheelchairs
e. CPAP and respiratory assist devices
f. Hospital beds
g. Transition rules
h. Beneficiary-owned equipment
2. Responsibility for repair of beneficiary-owned power wheelchairs furnished under CBPs
3. Phasing in the proposed payment rules in CBAs
4. Submitting bids for items paid on a continuous rental basis
VII. Scope of Hearing Aid Coverage Exclusion
A. Background
B. Current Issues
C. Proposed Provisions
VIII. Definition of Minimal Self-Adjustment of Orthotics Under Competitive Bidding
A. Background
B. Current Issues
C. Proposed Provisions
IX. Revision to Change of Ownership Rules to Allow Contract Suppliers to Sell Specific Lines of Business
A. Background
B. Proposed Provisions
X. Proposed Changes to the Appeals Process for Termination of Competitive Bidding Contract
XI. Technical Change Related to Submitting Bids for Infusion Drugs under the DMEPOS Competitive Bidding Program
XII. Accelerating Health Information Exchange
XIII. Collection of Information Requirements
XIV. Response to Comments
XV. Economic Analyses
A. Regulatory Impact Analysis
1. Introduction
2. Statement of Need
3. Overall Impact
B. Detailed Economic Analysis
1. CY 2015 End-Stage Renal Disease Prospective Payment System
a. Effects on ESRD Facilities
b. Effects on Other Providers
c. Effects on the Medicare Program
d. Effects on Medicare Beneficiaries
e. Alternatives Considered
2. End-Stage Renal Disease Quality Incentive Program
3. DMEPOS Provisions
C. Accounting Statement
XVI. Regulatory Flexibility Act Analysis
XVII. Unfunded Mandates Reform Act Analysis
XVIII. Federalism Analysis
XIX. Congressional Review Act
XX. Files Available to the Public via the Internet
Regulations Text

Acronyms

Because of the many terms to which we refer by acronym in this final rule, we are listing the acronyms used and their corresponding meanings in alphabetical order below:

AHRQ—Agency for Healthcare Research and Quality
ANOVA—Analysis of Variance
ANPRM—Advanced Notice of Proposed Rulemaking
ARM—Adjusted Ranking Metric
ASP—Average Sales Price
ATRA—The American Taxpayer Relief Act of 2012
BEA—Bureau of Economic Analysis
BLS—Bureau of Labor Statistics
BMI—Body Mass Index
CBA—Competitive Bidding Area
CBP—Competitive Bidding Program
CBSA—Core based statistical area
CCN—CMS Certification Number
CDC—Centers for Disease Control and Prevention
CfC—Conditions for Coverage
CHOW—Change of Ownership
CKD—Chronic Kidney Disease
CPAP—Continuous positive airway pressure
CY—Calendar Year
DFC—Dialysis Facility Compare
DME—Durable Medical Equipment
DMEPOS—Durable Medical Equipment, Prosthetics, Orthotics, and Supplies
ESA—Erythropoiesis stimulating agent
ESRD—End-Stage Renal Disease
ESRDB End-Stage Renal Disease bundled
ESRD PPS— End-Stage Renal Disease Prospective Payment System
FDA—Food and Drug Administration
GEM—General Equivalence Mappings
HCP—Healthcare Personnel
HD—Hemodialysis
HAIs—Healthcare-Acquired Infections
HCPCS—Healthcare Common Procedure Coding System
HCFA—Health Care Financing Administration
HLM—Hierarchical Logistic Modeling
HHS—Department of Health and Human Services
ICD—International Classification of Diseases
ICD–9–CM—International Classification of Disease, 9th Revision, Clinical Modification
ICD–10–CM—International Classification of Disease, 10th Revision, Clinical Modification
ICH CAHPS—In-Center Hemodialysis Consumer Assessment of Healthcare Providers and Systems
IGI—IHS Global Insight
IIC—Inflation-indexed charge
IOLs—Intraocular Lenses
IPPS—Inpatient Prospective Payment System
ICH CAHPS—In-Center Hemodialysis Consumer Assessment of Healthcare Providers and Services
IUR—Inter-unit reliability
MAC—Medicare Administrative Contractor
MAP—Medicare Allowable Payment
MFP—Multifactor Productivity
MIPPA—Medicare Improvements for Patients and Providers Act of 2008
MLR—Minimum Lifetime Requirement
MSA—Metropolitan statistical areas
NAMES—National Association of Medical Equipment Suppliers
NHSN—National Health Safety Network
NQF—National Quality Forum
NQS—National Quality Strategy
OBRA—Omnibus Budget Reconciliation Act
OMB—Office of Management and Budget
P&O—Prosthetics and orthotics
PAMA—Protecting Access to Medicare Act of 2014
PC—Product category
PD—Peritoneal Dialysis

PEN—Parenteral and enteral nutrition
PFS—Physician Fee Schedule
QIP—Quality Incentive Program
RMA—Reporting Measure Adjuster
RSPA—Regional single payment amounts
RUL—Reasonable useful lifetime
SAF—Standard Analysis File
SHR—Standardized Hospitalization Ratio Admissions
SMR—Standardized Mortality Ratio
SPA—Single payment amount
STrR—Standardized Transfusion Ratio
TENS—Transcutaneous electrical nerve stimulation
TEP—Technical Expert Panel
TPS—Total Performance Score
VBP—Value Based Purchasing

I. Executive Summary

A. Purpose

1. End-Stage Renal Disease (ESRD) Prospective Payment System (PPS)

On January 1, 2011, we implemented the ESRD PPS, a case-mix adjusted bundled prospective payment system for renal dialysis services furnished by ESRD facilities. This rule proposes to update and make revisions to the End-Stage Renal Disease (ESRD) prospective payment system (PPS) for calendar year (CY) 2015. Section 1881(b)(14) of the Social Security Act (the Act), as added by section 153(b) of the Medicare Improvements for Patients and Providers Act of 2008 (MIPPA) (Pub. L. 110–275), and section 1881(b)(14)(F) of the Act, as added by section 153(b) of MIPPA and amended by section 3401(h) of the Affordable Care Act (Pub. L. 111–148), established that beginning CY 2012, and each subsequent year, the Secretary shall annually increase payment amounts by an ESRD market basket increase factor, reduced by the productivity adjustment described in section 1886(b)(3)(B)(xi)(II) of the Act.

Section 632 of the American Taxpayer Relief Act of 2012 (ATRA) (Pub. L. 112–240) included several provisions that apply to the ESRD PPS. Section 632(a) of ATRA added section 1881(b)(14)(I) to the Act, which required the Secretary, by comparing per patient utilization data from 2007 with such data from 2011, to reduce the single payment amount to reflect the Secretary's utilization of ESRD-related drugs and biologicals. We finalized the amount of the drug utilization adjustment pursuant to this section in the CY 2014 ESRD PPS final rule with a 3- to 4-year transition (78 FR 72161 through 72170). Section 632(b) of ATRA prohibited the Secretary from paying for oral-only ESRD-related drugs and biologicals under the ESRD PPS before January 1, 2016. And finally, section 632(c) of ATRA requires the Secretary, by no later than January 1, 2016, to analyze the case mix payment adjustments under section 1881(b)(14)(D)(i) of the Act and make appropriate revisions to those adjustments.

On April 1, 2014, the Congress enacted the Protecting Access to Medicare Act of 2014 (PAMA) (Pub. L. 113–93). PAMA section 217 includes several provisions that apply to the ESRD PPS. Specifically, sections 217(b)(1) and (2) of PAMA amend sections 1881(b)(14)(F) and (I) of the Act. We interpret the amendments to sections 1881(b)(14)(F) and (I) as replacing the drug utilization adjustment that was finalized in the CY 2014 ESRD PPS final rule with specific provisions that dictate what the market basket update will be for CY 2015 (0.0 percent) and how it will be reduced in CYs 2016 through 2018. Section 217(a)(1) of PAMA amends section 632(b)(1) of ATRA, which now provides that the Secretary may not pay for oral-only drugs and biologicals used for the treatment of ESRD under the ESRD PPS prior to January 1, 2024. Section 217(a)(2) further amends section 632(b)(1) of ATRA by adding a sentence that provides: ''Notwithstanding section 1881(b)(14)(A)(ii) of the Social Security Act (42 U.S.C. 1395rr(b)(14)(A)(ii)), implementation of the policy described in the previous sentence shall be based on data from the most recent year available.'' Finally, PAMA section 217(c) provides that, as part of the CY 2016 ESRD PPS rulemaking, the Sectary shall establish a process for (1) determining when a product is no longer an oral-only drug; and (2) including new injectable and intravenous products into the ESRD PPS bundled payment.

As discussed further below, section 212 of PAMA provides that the Secretary may not adopt ICD–10 prior to October 1, 2015. HHS has announced that it intends to issue an interim final rule that will require use of ICD–10 beginning October 1, 2015 and will require the continued use of ICD–9–CM through September 30, 2015. Therefore, the ESRD PPS will continue to use ICD–9 through September 30, 2015 and will require use of ICD–10 beginning October 1, 2015 for purposes of the comorbidity payment adjustment.

2. End-Stage Renal Disease (ESRD) Quality Incentive Program (QIP)

This rule also proposes to set forth requirements for the ESRD Quality Incentive Program (QIP), including for payment years (PYs) 2017 and 2018. The program is authorized under section 1881(h) of the Social Security Act (the Act). The ESRD QIP is the most recent step in fostering improved patient outcomes by establishing incentives for dialysis facilities to meet or exceed performance standards established by CMS.

3. Durable Medical Equipment, Prosthetics, Orthotics, and Supplies (DMEPOS)

This proposed rule proposes a methodology for making national price adjustments to payments for Durable Medical Equipment, Prosthetics, Orthotics, and Supplies (DMEPOS) paid under fee schedules based upon information gathered from the DMEPOS competitive bidding programs (CBPs) and proposes to phase in special payment rules in a limited number of competitive bidding areas (CBAs) under the CBP for certain, specified DME and enteral nutrition. This rule proposes to clarify the statutory Medicare hearing aid coverage exclusion under section 1862(a)(7) of the Act and the regulation at 42 CFR 411.15(d) to further specify the scope of this exclusion and to note certain devices excepted from the hearing aid exclusion. In addition, this rule proposes to update the definition of minimal self-adjustment at § 414.402 to note the specialized training that is needed by suppliers to provide custom fitting services if they are not certified orthotists. Finally, this rule proposes a revision to the Change of Ownership (CHOW) policy in the current regulations to allow a product category to be severed from a competitive bidding contract and transferred to a new contract when a contract supplier sells a distinct line of business to a qualified successor entity.

B. Summary of the Major Provisions

1. ESRD PPS

- *Update to the ESRD PPS base rate for CY 2015:* For CY 2015, we are proposing an ESRD PPS base rate of $239.33. This amount reflects a 0.0 percent update to the payment rate as required by section 1881(b)(14)(F)(i) of the Act, as amended by section 217(b)(2) of PAMA, and the application of the proposed wage index budget-neutrality adjustment factor of 1.001306 to the CY 2014 ESRD PPS base rate of $239.02.
- *Rebasing and revision of the ESRD bundled (ESRDB) market basket:* For CY 2015, we are proposing to rebase and revise the ESRDB market basket so the cost weights and price proxies would reflect the mix of goods and services that underlie ESRD bundled operating and capital costs for CY 2012. We note that if PAMA had not been enacted the proposed 2012-based ESRDB market basket update less productivity for CY

2015 would have been 1.6 percent, or (2.0 percent less 0.4 percentage point).

• *Update to the labor-related share:* Because the cost distributions would change significantly as a result of the proposed ESRDB market basket revision, the proposed labor-related share would be 50.673 percent compared to the current labor-related share of 41.737 percent. The change to the labor-related share would have a significant impact on payments for certain ESRD facilities, specifically those ESRD facilities that have low wage index values. Therefore, for CY 2015 we are proposing a 2-year transition, in which the CY 2015 payment would be based on a 50/50 blended labor-related share that would apply to all ESRD facilities. ESRD facilities would receive 50 percent of their current labor-related share and 50 percent of their revised labor-related share. Specifically, we would apply a labor-related share of 46.205 ((41.737+50.673)/2 = 46.205). For CY 2016, the labor-related share would be based on 100 percent of the revised labor-related share.

• *Update to the wage index and wage index floor:* We adjust wage indices on an annual basis using the most current hospital wage data to account for differing wage levels in areas in which ESRD facilities are located. In CY 2015, we are not proposing any changes to the application of the wage index budget-neutrality adjustment factor and will continue to apply the budget-neutrality adjustment to the base rate for the ESRD PPS. We will continue our policy for the gradual phase-out of the wage index floor and reduce the wage index floor values to 0.40, as finalized in the CY 2014 ESRD PPS final rule (78 FR 72173–72174).

• *Update to the Core-Based Statistical Areas (CBSA):* For CY 2015, we are proposing to implement the new CBSA delineations as described in the February 28, 2013 OMB Bulletin No. 13–01, beginning with the CY 2015 ESRD PPS wage index. In addition, we are proposing to implement a 2-year transition, under which a 50/50 blended wage index would apply to all ESRD facilities for CY 2015. Specifically, facilities would receive 50 percent of their CY 2015 wage index based on the CBSA delineations for CY 2014 and 50 percent of their CY 2015 wage index based on the proposed new CBSA delineations. In CY 2016, facilities' wage index values would be based 100 percent on the new CBSA delineations.

• *Update to the outlier policy:* We are updating the outlier services fixed dollar loss amounts for adult and pediatric patients and Medicare Allowable Payments (MAPs) for adult patients for CY 2015 using 2013 claims data. Based on the use of more current data, the fixed-dollar loss amount for pediatric beneficiaries would increase from $54.01 to $56.30 and the MAP amount would increase from $37.29 to $40.05, as compared to CY 2014 values. For adult beneficiaries, the fixed-dollar loss amount would decrease from $98.67 to $85.24 and the MAP amount would increase from $51.97 to $52.61. The 1 percent target for outlier payments was not achieved in CY 2013. We believe using CY 2013 claims data to update the outlier MAP and fixed dollar loss amounts for CY 2015 will increase payments for ESRD beneficiaries requiring higher resource utilization in accordance with a 1 percent outlier percentage.

• *Clarification for the low-volume payment adjustment (LVPA):* We are clarifying two policies regarding MAC verification and proposing conforming changes to the LVPA regulation. The first clarification explains that MACs can consider supporting data from hospital-based ESRD facilities to verify the facility's total treatment count. The second clarification explains that MACs can add or prorate treatment counts from non-standard cost reporting periods (those that are not 12-month periods) where there is a change in ownership that does not result in a new Provider Transaction Access Number.

• *Continued use of ICD–9–CM codes and corrections to the ICD–10–CM codes eligible for the comorbidity payment adjustment:* Section 212 of PAMA provides that the Secretary may not adopt ICD–10 prior to October 1, 2015. HHS has announced that it intends to issue an interim final rule that will require use of ICD–10 beginning October 1, 2015 and will require the continued use of ICD–9–CM through September 30, 2015. Therefore, the ESRD PPS will continue to use ICD–9 through September 30, 2015 and will require use of ICD–10 beginning October 1, 2015 for purposes of the comorbidity payment adjustment. For CY 2015, we are correcting several typographical errors and omissions in the Tables that appeared in the CY 2014 ESRD PPS final rule.

2. ESRD QIP

This rule proposes to implement requirements for the ESRD QIP, including measure sets for PYs 2017 and 2018.

• *PY 2017 Measure Set:* For PY 2017, we are proposing to remove one measure from the ESRD QIP, the Hemoglobin Greater than 12 g/dL clinical measure, on the grounds that it is ''topped out''. We are also proposing to adopt the Standardized Readmission Ratio (SRR) clinical measure, which evaluates care coordination.

• *PY 2018 Measure Set:* For PY 2018, we are proposing to adopt two new clinical measures—the Standardized Transfusion Ratio (STrR) and Pediatric Peritoneal Dialysis Adequacy—and three new reporting measures: (1) Pain Assessment and Follow-Up; (2) Clinical Depression Screening and Follow-Up; and (3) National Healthcare Safety Network (NHSN) Healthcare Personnel Influenza Vaccination. We are also proposing to transition the In-Center Hemodialysis Consumer Assessment of Healthcare Providers and Systems (ICH CAHPS) survey reporting measure to a clinical measure.

• *Revision to the ICH CAHPS Reporting Measure:* Beginning with the PY 2017 program year, we are proposing to revise the ICH CAHPS reporting measure to determine facility eligibility for the measure based on the number of survey-eligible patients treated during the ''eligibility period'', which we propose to define as the Calendar Year (CY) that immediately precedes the performance period. Survey-eligible patients are defined in the ICH CAHPS measure specifications available at *http://www.cms.gov/Medicare/Quality-Initiatives-Patient-Assessment-Instruments/ESRDQIP/061_TechnicalSpecifications.html* and *https://ichcahps.org*.

• *Revision to the NHSN Bloodstream Infection in Hemodialysis Outpatients Clinical Measure:* Beginning with the PY 2016 program year, we are proposing to revise the NHSN Bloodstream Infection in Hemodialysis Outpatients clinical measure to calculate facility performance using the Adjusted Ranking Metric (ARM).

• *Revision to the Mineral Metabolism Reporting Measure:* Beginning with the PY 2018 program year, we are proposing to revise the Mineral Metabolism reporting measure to allow facilities to submit both serum phosphorus and plasma phosphorus measurements.

• *Extraordinary Circumstances Exemption:* Beginning with the PY 2017 ESRD QIP, we are proposing to exempt dialysis facilities from all requirements of the ESRD QIP clinical and reporting measures during the months in which they are forced to close due to a natural disaster or other extraordinary circumstances.

• *New Scoring Methodology for PY 2018:* For PY 2018, we are proposing to use a new scoring methodology for the ESRD QIP. This proposed scoring methodology would assign facility Total Performance Scores (TPS) on the basis of two domains, the Clinical Measure

Domain and the Reporting Measure Domain. Facility scores on clinical measures in the Clinical Measure Domain would be divided into subdomains that align with National Quality Strategy (NQS) domains and weighted according to the number of measures in a subdomain, facility experience with the measure, and the measure's alignment with CMS priorities for quality improvement. These weighted scores would be summed to produce a facility's Clinical Measure Domain score. Facility scores on reporting measures in the Reporting Measure Domain would be summed and calculated to produce a facility's Reporting Measure Adjuster, which would be subtracted from the facility's Clinical Measure Domain score to produce a facility's TPS.

3. DMEPOS

• *The methodology for making national price adjustments based upon information gathered from the DMEPOS CBPs:* As required by the MIPPA, this rule proposes methodologies for using information from the DMEPOS CBP to adjust the fee schedule amounts for DME in areas where CBPs are not implemented. The rule proposes to use the same methodologies to adjust the fee schedule amounts for enteral nutrition and off-the shelf (OTS) orthotics in areas where CBPs are not implemented.

• *Phase in of special payment rules in a limited number of CBAs under the CBP for certain, specified DME and enteral nutrition.* This rule proposes to phase-in special payment rules for certain DME and enteral nutrition under the DMEPOS CBP in a limited number of CBAs.

• *Medicare hearing aid coverage exclusion under section 1862(a)(7) of the Act:* This rule proposes to modify the regulation at § 411.15 to address the scope of the statutory hearing aid exclusion and note the types of devices that are not subject to the hearing aid exclusion.

• *Definition of minimal self-adjustment at § 414.402:* This rule proposes to update the regulation to indicate what specialized training is needed to provide custom fitting services if suppliers are not certified orthotists.

• *Change of Ownership Rules to Allow Contract Suppliers to Sell Specific Lines of Business:* This proposed rule proposes to establish an exception under the CHOW rules to allow CMS to sever a product category from a contract, incorporate the product category into a new contract, and transfer the new contract to a qualified new owner under certain specific circumstances.

• *Termination of a Competitive Bidding Contract:* This rule proposes to clarify the effective date for terminations of competitive bidding contracts, which impacts the deadline for which contract suppliers must notify its beneficiaries of the termination.

C. Summary of Costs and Benefits

In section XII.B of this proposed rule, we set forth a detailed analysis of the impacts that the proposed changes would have on affected entities and beneficiaries. The impacts include the following:

1. Impacts of the Proposed ESRD PPS

The impact chart in section XII.B.1.a of this proposed rule displays the estimated change in payments to ESRD facilities in CY 2015 compared to estimated payments in CY 2014. The overall impact of the CY 2015 changes is projected to be a 0.3 percent increase in payments. Hospital-based ESRD facilities have an estimated 0.5 percent increase in payments compared with freestanding facilities with an estimated 0.3 percent increase.

We estimate that the aggregate ESRD PPS expenditures would increase by approximately $30 million from CY 2014 to CY 2015. This reflects a $0 million change from the payment rate update and a $30 million increase due to the updates to the outlier threshold amounts. As a result of the projected 0.3 percent overall payment increase, we estimate that there will be an increase in beneficiary co-insurance payments of 0.3 percent in CY 2015, which translates to approximately $10 million.

2. Impacts for ESRD QIP

The overall economic impact of the ESRD QIP is an estimated $11.9 million in PY 2017 and $7.2 million in PY 2018. In PY 2017, we expect the total payment reductions to be approximately $11.9 million, and the costs associated with the collection of information requirements for the validation of NHSN data feasibility study to be approximately $27 thousand for all ESRD facilities. In PY 2018, we expect the total payment reductions to be approximately $7 million, and the costs associated with the collection of information requirements for the NHSN Healthcare Personnel Influenza Vaccination reporting measure to be approximately $248 thousand for all ESRD facilities.

The ESRD QIP will continue to incentivize facilities to provide high-quality care to beneficiaries.

3. Impacts for DMEPOS

a. Proposed methodology for making national price adjustments to DMEPOS fee schedule amounts based upon information gathered from the DMEPOS competitive bidding programs

The proposed regulation proposes to adjust Medicare fee schedule amounts for items subject to DMEPOS CBPs beginning January 1, 2016, using information from the DMEPOS CBPs to be applied to items in non-competitive bidding areas. It is estimated that these adjustments would save over $7 billion for the 5-year period beginning January 1, 2016, and ending December 30, 2020. The estimated savings are primarily derived from price reductions for items. It is expected that most of the economic impact would result from reduced payment amounts. The ability of suppliers to furnish items is not expected to be impacted.

b. Proposed phase in of special payment rules under the competitive bidding program for certain DME and enteral nutrition

We believe that the proposed special payment rules for certain DME and enteral nutrition under the DMEPOS CBPs would not have a significant impact on beneficiaries and suppliers. Contract suppliers are responsible for furnishing items and services needed by the beneficiary, and the cost to suppliers for furnishing these items and services does not change based on whether or not the equipment and related items and services are paid for separately under a capped rental payment method. Because the supplier's bids would reflect the cost of furnishing items in accordance with the new payment rules, we expect the overall savings to generally be the same as they are under the current payment rules.

Furthermore, the proposed special payment rules would be phased under a limited number of areas first to evaluate their impact on the program, beneficiaries, and suppliers, including costs, quality, and access. Expanded use of the special payment rules in other areas or for other items would be addressed in future rulemaking.

c. Proposed clarification of the statutory Medicare hearing aid coverage exclusion stipulated at section 1862(a)(7) of the Act

This proposed rule proposes to clarify the scope of the Medicare coverage exclusion for hearing aids and withdraw coverage of bone anchored hearing aids. This proposal would not have a significant fiscal impact on the Medicare program, because the

Medicare program expenditures for bone anchored hearing aids during the period CY2005 through CY 2013 are less than $9,000,000. This proposed rule, if finalized, would provide further guidance about coverage of DME with regard to the statutory hearing aid exclusion. The proposed rule, if finalized, would leave unchanged coverage of cochlear implants and brain stem implants, which are not considered hearing aids.

d. Proposed update of the definition of minimal self-adjustment at 42 CFR 414.402

The proposed rule proposes to update the definition of minimal self-adjustment to make clear that minimal self-adjustment means an adjustment that the beneficiary, caretaker for the beneficiary, or supplier of the device can perform and does not require the services of a certified orthotist (that is, an individual certified by either the American Board for Certification in Orthotics and Prosthetics, Inc., or the Board for Orthotist/Prosthetist Certification) or a physician as defined in section 1861(r) of the Act, a treating practitioner means a physician assistant, nurse practitioner, or clinical nurse specialist as defined in section 1861(aa)(5) of the Act, an occupational therapist as defined in 42 CFR 484.4, or physical therapist as defined in 42 CFR 484.4 in compliance with all applicable Federal and State licensure and regulatory requirements. If finalized, this revised definition would impact suppliers furnishing custom fitted orthotics that do not have this expertise. These suppliers would be required to hire an individual with expertise. For example, according to the Bureau of Labor Statistics Occupational Employment Statistics May 2013 the median pay for a certified orthotist is $30.27 an hour. The impact will vary according to the caseload of custom fitted orthotics provided by an individual supplier.

e. Change of Ownership Rules to Allow Contract Suppliers to Sell Specific Lines of Business

This rule proposes to clarify the CHOW rules in order to limit disruption to the normal course of business for DME suppliers. This rule proposes to establish an exception under the current CHOW rules to allow CMS to sever a product category from a contract, incorporate the product category into a new contract, and transfer the new contract to a qualified new owner under certain specific circumstances. This proposed clarification would impact businesses in a positive way by allowing them to conduct everyday transactions with less disruption from our rules and regulations.

II. Calendar Year (CY) 2015 End-Stage Renal Disease (ESRD) Prospective Payment System (PPS)

A. Background on the End-Stage Renal Disease (ESRD) Prospective Payment System (PPS)

On August 12, 2010, we published in the **Federal Register** a final rule (75 FR 49030 through 49214) in which we implemented a case-mix adjusted bundled PPS for Medicare outpatient ESRD dialysis services beginning January 1, 2011, in accordance with section 1881(b)(14) of the Act, as added by section 153(b) of MIPPA. On November 10, 2011, we published in the **Federal Register** a final rule (76 FR 70228 through 70316) in which we made a number of routine updates for CY 2012, implemented the second year of the transition to the ESRD PPS, made several policy changes and clarifications, and made technical changes. On November 9, 2012, we published in the **Federal Register** a final rule (77 FR 67450 through 67531) in which we made a number of routine updates for CY 2013, implemented the third year of the transition to the ESRD PPS, and made several policy changes and reiterations.

On December 2, 2013, we published in the **Federal Register** a final rule (78 FR 72156 through 72253) titled, Medicare Program; End-Stage Renal Disease Prospective Payment System, Quality Incentive Program, and Durable Medical Equipment, Prosthetics, Orthotics, and Supplies'' (hereinafter referred to as the CY 2014 ESRD PPS final rule). In that final rule, for the ESRD PPS, we made a number of routine updates for CY 2014, implemented the fourth and final year of the transition, implemented sections 632(a) and (b)(1) of ATRA, and made policy changes and clarifications. Specifically, in that rule, we finalized the following:

- *Update to the ESRD PPS base rate for CY 2015.* An ESRD PPS base rate of $239.02 per treatment for renal dialysis services. This amount reflected the CY 2014 ESRD bundled (ESRDB) market basket update of 3.2 percent minus a multifactor productivity adjustment of 0.4 percent, that is, a 2.8 percent increase. This amount also reflected the application of the wage index budget-neutrality adjustment of 1.000454, the home dialysis training add-on budget neutrality adjustment factor of 0.999912, and the portion of the drug utilization adjustment that was transitioned for CY 2014, or $8.16.
- *Update to the wage index floor.* A 0.05 reduction to the CY 2014 and CY 2015 wage index floor values, which resulted in a wage index floor value of 0.45 for CY 2014 and a wage index floor value of 0.40 for CY 2015 under the ESRD PPS.
- *Update to the outlier policy.* Using CY 2012 claims data to update the outlier Medicare Allowable Payments (MAPs) and fixed dollar loss amounts for CY 2014, which resulted in updated fixed dollar loss amounts for adult and pediatric patients and MAPs for adult patients. Specifically, for pediatric beneficiaries, we finalized a fixed-dollar loss amount of $54.01 and a MAP amount of $40.49. For adult beneficiaries, we finalized a fixed-dollar loss amount of $98.67 and a MAP amount of $50.25.
- *The application of ICD–10–CM diagnosis codes to the comorbidity payment adjustment.* We discussed and provided a crosswalk from ICD–9–CM to ICD–10–CM for codes that are subject to the comorbidity payment adjustment. We finalized a policy under which all ICD–10–CM codes to which ICD–9–CM codes that are eligible for the comorbidity payment adjustment crosswalk are eligible for the comorbidity payment adjustment beginning on October 1, 2014 with two exceptions. As discussed further below, however, section 212 of the Protecting Access to Medicare Act of 2014 (PAMA) (Pub. L. 113–93) provides that the Secretary may not adopt ICD–10 prior to October 1, 2015. HHS has announced that it intends to issue an interim final rule that will require use of ICD–10 beginning October 1, 2015 and will continue to require use of ICD–9–CM through September 30, 2015. Accordingly, we plan to continue to require facilities to utilize ICD–9–CM codes to identify comorbidities eligible for the comorbidity payment adjustment through September 30, 2015, and then to use ICD–10–CM codes beginning October 1, 2015.
- *The self-dialysis and home dialysis training add-on adjustment.* An increase to the self-dialysis and home dialysis training add-on adjustment from $33.44 to $50.16.
- *The delay in payment for oral-only ESRD-related drugs and biologicals until January 1, 2016.* We also delayed payment for oral-only ESRD-related drugs under the ESRD PPS until January 1, 2016. As discussed further below, section 217(a)(1) of PAMA amended section 632(b)(1) of ATRA to provide that the Secretary may not include oral-only ESRD-related drugs for payment

under the ESRD PPS prior to January 1, 2024.

B. Routine Updates and Proposed Policy Changes to the CY 2015 ESRD PPS

1. ESRD PPS Base Rate

In the CY 2011 ESRD PPS final rule (75 FR 49071 through 49083), we discussed the development of the ESRD PPS per treatment base rate that is codified in the Medicare regulations at § 413.220 and § 413.230. The CY 2011 ESRD PPS final rule also provides a detailed discussion of the methodology used to calculate the ESRD PPS base rate and the computation of factors used to adjust the ESRD PPS base rate for projected outlier payments and budget-neutrality in accordance with sections 1881(b)(14)(D)(ii) and 1881(b)(14)(A)(ii) of the Act, respectively. Specifically, the ESRD PPS base rate was developed from CY 2007 claims (that is, the lowest per patient utilization year as required by section 1881(b)(14)(A)(ii) of the Act), updated to CY 2011, and represented the average per treatment Medicare Allowable Payment (MAP) for composite rate and separately billable services. In accordance with section 1881(b)(14)(D) of the Act and regulations at § 413.230, the ESRD PPS base rate is adjusted for the patient-specific case-mix adjustments, applicable facility adjustments, geographic differences in area wage levels using an area wage index, as well as applicable outlier payments or training payments.

a. Changes to the Drug Utilization Adjustment

i. The Drug Utilization Adjustment Finalized in the CY 2014 ESRD PPS Final Rule

Section 1881(b)(14)(I) of the Act, as added by section 632(a) of the American Taxpayer Relief Act of 2012 (ATRA), required that, for services furnished on or after January 1, 2014, the Secretary shall make reductions to the single payment for renal dialysis services to reflect the Secretary's estimate of the change in the utilization of ESRD-related drugs and biologicals (excluding oral-only ESRD-related drugs) by comparing per patient utilization data from 2007 with such data from 2012. Section 1881(b)(14)(I) further required that in making the reductions, the Secretary take into account the most recently available data on Average Sales Prices (ASP) and changes in prices for drugs and biologicals reflected in the ESRD market basket percentage increase factor under section 1881(b)(14)(F). Consistent with these requirements, in CY 2014, we finalized a payment adjustment to the CY 2014 ESRD PPS base rate that reflected the change in utilization of ESRD-related drugs and biologicals from CY 2007 to CY 2012.

Specifically, we finalized the drug utilization adjustment amount of $29.93 per treatment, and finalized a policy to implement this amount over a 3- to 4-year transition period. For CYs 2014 and 2015, we stated that we would implement the transition by offsetting the payment update by a portion of the reduction amount necessary to create an overall impact of a zero percent for facilities from the previous year's payments. For example, in CY 2014 we finalized a per treatment drug utilization adjustment amount for the first transition year of $8.16 or 3.3 percent, which represented the CY 2014 ESRDB market basket update minus productivity and other impacts to create an overall impact of zero percent. For a complete discussion of the methodology for computing the drug adjustment please see the CY 2014 ESRD PPS final rule (78 FR 72161 through 72170).

ii. PAMA Changes to the Drug Utilization Adjustment

On April 1, 2014, Congress enacted PAMA. Section 217(b), titled Mitigation of the Application of Adjustment to ESRD Bundled Payment Rate to Account for Changes in the Utilization of Certain Drugs and Biologicals, amends section 1881(b)(14)(I) of the Act by inserting ''and before January 1, 2015'' after January 1, 2014. This amendment effectively eliminates the remaining years of the drug utilization adjustment transition. In its place, the PAMA amendments to section 1881(b)(14)(F)(i) dictate what the market basket increase factor will be for 2015 and how it will be reduced in 2016 through 2018. In particular, PAMA section 217(b)(2)(C) amended section 1881(b)(14)(F)(i) by adding subclause (III), which provides that ''[n]otwithstanding subclauses (I) and (II), in order to accomplish the purposes of subparagraph (I) with respect to 2015, the increase factor described in subclause (I) for 2015 shall be 0.0 percent.'' We interpret subclause (III) to mean that the market basket increase factor less the productivity adjustment for 2015 is 0.0 percent. The PAMA amendments also provide for a payment reduction in lieu of the drug utilization adjustment in 2016 through 2018. In particular, PAMA section 217(b)(2)(ii) further amends section 1881(b)(14)(i)(I) by adding at the end the following new sentence, '' In order to accomplish the purpose of subparagraph (I) with respect to 2016, 2017, and 2018, after determining the increase factor described in the preceding sentence for each of 2016, 2017, and 2018, the Secretary shall reduce such increase factor by 1.25 percentage points for each of 2016 and 2017 and by 1 percentage point for 2018.'' We interpret this provision as requiring us to reduce the market basket increase factor for 2016 through 2018 by the percentages prescribed in the statute.

b. Payment Rate Update for CY 2015

As discussed in section II.B.2 of this proposed rule, section 1881(b)(14)(F)(i) of the Act, as added by section 153(b) of MIPPA and amended by section 3401(h) of the Affordable Care Act, provides that, beginning in 2012, the ESRD PPS payment amounts are required to be annually increased by the rate of increase in the ESRD market basket, reduced by the productivity adjustment described in section 1886(b)(3)(B)(xi)(II) of the Act. If PAMA had not stipulated a 0.0 percent payment update for CY 2015, we would have proposed a payment update of 1.6 percent, (a 2.0 percent ESRDB market basket update less a 0.4 percent productivity adjustment). In accordance with section 1881(b)(14)(F)(i)(III) of the Act, as added by PAMA section 217(b)(2)(C), however, we propose a 0.0 percent update to the CY 2014 ESRD PPS base rate of $239.02 for CY 2015.

c. CY 2015 ESRD PPS Wage Index Budget Neutrality Adjustment

For CY 2015 we propose to apply the wage index budget-neutrality adjustment factor of 1.001306 to the unadjusted CY 2014 and CY 2015 ESRD PPS base rate (that is, $239.02), yielding a proposed CY 2015 ESRD PPS wage-index budget-neutrality adjusted base rate of $239.33 ($239.02 × 1.001306 = $239.33).

d. Labor-Related Share

As discussed in section II.2.e, as part of the proposed ESRDB market basket rebasing and revision, we are proposing to update the labor-related share value from 41.737 percent to 50.673 percent. We note that some ESRD facilities are adversely affected by this proposal. For example, rural facilities and facilities located in CBSA areas with wage indexes below 1 will experience reduced payments due to an increase in the labor-related share, while other facilities located in CBSA area where wage indices are above 1 will experience increased payments. While we are proposing the new labor-related share under the ESRD PPS payment system computed at 50.673 percent, we propose to implement this value using a 2-year 50/50 blend transition.

Therefore, for CY 2015 we propose to apply 50 percent of the value of the current labor-related share under the ESRD PPS (41.737) and 50 percent of the value of the new labor-related share, (50.673), add the values together and divide by two, for a CY 2015 labor-related value of 46.205 ((41.737 + 50.673)/2 = 46.205). Beginning in CY 2016 we propose to apply 100 percent of the proposed labor-related share value of 50.673 percent. We propose to continue to apply a labor-related share value of 50.673 percent until such time in the future the ESRDB market basket is again rebased in computing a wage index-adjusted base rate for ESRD facilities. We believe that this approach is similar to the 50/50 blend transition proposed for the CY 2015 wage indexes and discussed in section II.3.c of this rule and that a 2- year transition is necessary to allow ESRD facilities time to adjust to the new labor related-share value.

We note that we considered implementing the computed labor related share value of 50.673 for CY 2015, but that would have increased the CY 2015 proposed wage index budget neutrality factor to 1.002081. This increase would have resulted in a decrease in CY 2015 Medicare payments to rural facilities of 1.3 percent, and an increase to urban facilities 0.5 percent. When we apply the transition labor-related share value of 46.205, the disparity in impacts for rural and urban facilities is reduced to less than 1.0 percent. Specifically, rural facilities would experience a decrease in payments of 0.5 percent and urban facilities would experience an increase in payments of 0.4 percent. (For more information of the CY 2015 Impact of Proposed Changes in Payments to ESRD Facilities for CY 2015 ESRD proposed rule, see section XV of this rule). Therefore, we believe a 2-year transition strikes an appropriate balance between ensuring that ESRD PPS payments are as accurate and stable as possible while giving facilities time to adjust to the new labor-related share factor.

In summary, we propose a CY 2015 ESRD PPS base rate update of $239.33. This reflects a 0.0 percent payment update consistent with section 1881(b)(14)(F)(i)(III), as added by section 217(b)(2) of PAMA. This base rate reflects the CY 2015 proposed wage index budget neutrality factor of 1.001306, and a labor-related share value of 46.205.

2. ESRD Bundled Market Basket and Labor-Related Share

a. Background

In accordance with section 1881(b)(14)(F)(i) of the Act, beginning in 2012, the ESRD payment amounts are required to be annually increased by an ESRD market basket increase factor that is reduced by the productivity adjustment in section 1886(b)(3)(B)(xi)(II) of the Act. The application of the productivity adjustment may result in the increase factor being less than 0.0 for a year and may result in payment rates for a year being less than the payment rates for the preceding year. The statute also provides that the market basket increase factor should reflect the changes over time in the prices of an appropriate mix of goods and services used to furnish renal dialysis services.

In the CY 2011 ESRD PPS final rule (75 FR 49151 through 49162), we established an ESRD Bundled market basket using CY 2008 as the base year. This market basket was used to annually update the ESRD base rate payments for CY 2012, CY 2013, and CY 2014. In this CY 2015 ESRD PPS proposed rule, we are proposing to revise and rebase the ESRDB market basket to a base year of CY 2012. We note that PAMA dictates a market basket update for CY 2015 of 0.0 percent and a reduction to the market basket updates in CYs 2016 through 2018 (by 1.25 percentage points for each of 2016 and 2017 and by 1 percentage point for 2018).

The term ''market basket'' refers to the mix of goods and services needed to produce ESRD care, and is also commonly used to denote the input price index that includes both weights (mix of goods and services) and price factors. The term ''ESRDB market basket'' as used in this proposed rule refers to the ESRDB input price index.

The proposed CY 2012-based ESRDB market basket represents the costs of operating and capital-related costs. The percentage change in the ESRDB market basket reflects the average change in the price of a fixed set of goods (both operating and capital) and services purchased by ESRD facilities in providing renal dialysis services. For further background information, see the CY 2011 final rule with comment period (75 FR 49151 through 49162).

For purposes of the ESRDB PPS, the ESRDB market basket is a fixed-weight (Laspeyres-type) price index. A Laspeyres-type index compares the cost of purchasing a specified mix of goods and services in a selected base period to the cost of purchasing that same group of goods and services at current prices. The effects on total expenditures resulting from changes in the quantity or mix of goods and services purchased subsequent or prior to the base period are, by design, not considered.

We construct the market basket in three steps. The first step is to select a base period and estimate total base period expenditure shares for mutually exclusive and exhaustive spending categories. We use total costs for operating and capital expenses. These shares are called ''cost'' or ''expenditure'' weights. The second step is to match each expenditure category to a price/wage variable, called a price proxy. We draw these price proxy variables from publicly available statistical series published on a consistent schedule, preferably at least quarterly. The final step involves multiplying the price series for each spending category by the cost weight for that category. The sum of these products (that is, weights multiplied by proxy index levels) for all cost categories yields the composite index level of the market basket for a given quarter or year. Repeating the third step for other quarters and years produces a time series of market basket index levels, from which we can calculate rates of growth.

The market basket represents a fixed-weight index because it answers the question of how much more or less it would cost, at a later time, to purchase the same mix of goods and services that was purchased in the base period.

We are proposing to use CY 2012 as the base year for the proposed rebased and revised ESRDB market basket cost weights. The cost weights for this proposed ESRDB market basket are based on the cost report data for independent ESRD facilities. We refer to the market basket as a CY market basket because the base period for all price proxies and weights are set to CY 2012 = 100. Source data included CY 2012 Medicare cost reports (Form CMS–265–11), supplemented with 2012 data from the U.S. Census Bureau's Services Annual Survey (SAS). Medicare cost reports from hospital-based ESRD providers were not used to construct the proposed ESRDB market basket because data from independent ESRD facilities tend to better reflect the actual cost structure faced by the ESRD facility itself, and are not influenced by the allocation of overhead over the entire institution, as can be the case with hospital-based providers. This approach is consistent with our standard methodology used in the development of other market baskets.

Consistent with our discussion in the CY 2011 final rule with comment period

(75 FR 49153), and as further discussed below, to implement section 1881(b)(14)(F)(i) of the Act we propose to revise and rebase the market basket so the cost weights and price proxies reflect the mix of goods and services that underlie ESRD bundled operating and capital costs for CY 2012.

b. Rebasing and Revision of the ESRD Bundled Market Basket

The terms ''rebasing'' and ''revising'', while often used interchangeably, actually denote different activities. Rebasing means shifting the base year for the structure of costs of the input price index (for example, for this proposed rule, we propose to shift the base year cost structure from CY 2008 to CY 2012). Revising means changing data sources, cost categories, price proxies, and/or methodology used in developing the input price index. We are proposing both to rebase and revise the ESRDB market basket to reflect CY 2012 total cost data.

We selected CY 2012 as the new base year because 2012 is the most recent year for which relatively complete Medicare cost report (MCR) data are available. In developing the proposed market basket, we reviewed ESRD expenditure data from ESRD MCRs (CMS Form 265–11) for CY 2012 for each freestanding ESRD facility that reported expenses and payments. The CY 2012 cost reports are those with cost reporting periods beginning on or after January 1, 2012 and before December 31, 2012. We propose to maintain our policy of using data from freestanding ESRD facilities because freestanding ESRD data reflect the actual cost structure faced by the ESRD facility itself. In contrast, expense data for a hospital-based ESRD reflect the allocation of overhead over the entire institution. Due to this method of allocation, the expenses of each hospital-based component may be skewed.

We developed cost category weights for the proposed CY 2012-based ESRDB market basket in two stages. First, we derived base weights for nine major categories (Wages and Salaries, Employee Benefits, Medical Supplies, Lab Services, Housekeeping & Operations, Pharmaceuticals, Administrative and General, Capital-Related Building & Fixed Equipment, and Capital-Related Machinery) from the ESRD MCRs. Second, we are proposing to divide the Administrative & General cost category into further detail using 2012 U.S. Census Bureau Services Annual Survey (SAS) Data for the industry Kidney Dialysis Centers (NAICS 621492). We apply the 2012 distributions from the SAS data to the 2012 ''Administrative & General'' cost weight to yield the more detailed 2012 cost weights. This is similar to the methodology we used to break the 2008-based Administrative & General Costs into more detail for the ESRDB market basket as detailed in the CY 2011 ESRD final rule (75 FR 49154 through 49159). The main difference is that in the 2008-based market basket we relied on data from the U.S. Census Bureau Business Expenses Survey (BES). The BES data was the predecessor to the SAS. The Census Bureau SAS data are published annually, with the most recent data available being 2012. For more information on the SAS data, see *http://www.census.gov/services/sas/about_the_surveys.html*.

We are proposing to include a total of 20 detailed cost categories for the proposed CY 2012-based ESRDB market basket, which is four more cost categories than the CY 2008-based ESRDB market basket. In addition, we are proposing to further decompose both the Wages and Salaries and Employee Benefits cost categories into four more detailed cost categories reflecting the occupational mix of full time equivalents (FTEs) at ESRD facilities. The four detailed occupational categories that will underlie both Wages and Salaries and Employee Benefits are: (1) Health-related workers; (2) Management workers; (3) Administrative workers; and (4) Service workers. Having more detailed cost categories for these compensation costs enables them to be proxied more precisely. We are also proposing to collapse the Professional Fees and All Other Services cost categories into single categories rather than splitting those categories into Labor-Related and Non-Labor-Related Services. We will continue to assume that 87 percent of Professional Fees are labor-related costs and will be included in the proposed labor-related share. In addition, we are proposing to revise our labels for All Other Materials to Medical Materials and Supplies, Laboratories to Lab Services, and All Other Labor-Related/Non Labor-Related to All Other Goods and Services. A more thorough discussion of our proposals is provided below.

i. Cost Category Weights

Using Worksheets A and B from the CY 2012 Medicare cost reports, we first computed cost shares for nine major expenditure categories: Wages and Salaries, Employee Benefits, Pharmaceuticals, Supplies, Lab Services, Administrative and General (A&G), Housekeeping and Operations, Capital-Related Building & Equipment, and Capital-Related Machinery. Edits were applied to include only cost reports that had total costs greater than zero. In order to reduce potential distortions from outliers in the calculation of the cost weights for the major expenditure categories, cost values for each category less than the 5th percentile or greater than the 95th percentile were excluded from the computations. The resulting data set included information from approximately 4,700 independent ESRD facilities' cost reports from an available pool of 5,333 cost reports. Expenditures for the nine cost categories as a proportion of total expenditures are shown in Table 1.

Table 1 presents the proposed CY 2012-based ESRDB and CY 2008-based ESRDB market basket major cost weights as derived directly from the MCR data. Following the table, we describe the sources of the major category weights and their subcategories in the proposed CY 2012-based ESRDB market basket.

TABLE 1—PROPOSED CY 2012-BASED ESRDB MARKET BASKET MAJOR COST WEIGHTS

Cost category	Proposed CY 2012-based ESRDB market basket	CY 2008-based ESRDB market basket
Wages and Salaries	31.839%	26.338%
Employee Benefits	6.570%	5.163%
Pharmaceuticals	16.510%	26.358%
Supplies	10.097%	9.726%
Lab Services	1.532%	0.356%
Housekeeping & Operations	3.785%	3.604%
Administrative & General (residual)	17.419%	17.594%
Capital-related Building & Fixed Equipment	8.378%	7.910%

TABLE 1—PROPOSED CY 2012-BASED ESRDB MARKET BASKET MAJOR COST WEIGHTS—Continued

Cost category	Proposed CY 2012-based ESRDB market basket	CY 2008-based ESRDB market basket
Capital-related Machinery	3.870%	2.951%

Note: Totals may not sum to 100.000% due to rounding.

Some costs are reported on the Medicare cost report but are not included in the ESRD bundled payment. For example, we removed the expenses related to vaccine costs from total expenditures since these are excluded from the ESRD bundled payment, but reported on the Medicare cost report.

We are proposing to expand the expenditure categories developed from the Medicare cost reports to allow for more detailed expenditure decomposition. To expand these cost categories, SAS data were used because the Medicare cost reports do not collect detailed information on the items of interest. Those categories include: benefits for all employees, professional fees, telephone, utilities, and all other goods and services. We chose to separately break out these categories to more accurately reflect ESRD facility costs. We describe below how the initially computed categories and weights from the cost reports were modified to yield the final 2012 ESRDB market basket expenditure categories and weights presented in this proposed rule.

Wages and Salaries

The weight for wages and salaries for direct patient care for 2012 was initially derived from Worksheet B of the Medicare cost report. However, because the cost center for direct patient care salaries does not include all other wage and salary costs for non-health workers and physicians, it was necessary to derive a methodology to include all salaries, not just direct patient care salaries, in order to calculate the appropriate market basket cost weight. This was accomplished in the following steps.

(1) From the trial balance of the cost report (Worksheet A), we computed the ratio of salaries to total costs in each of the following cost centers: housekeeping and operations, employee benefits for direct patient care, Administrative & General, Supplies, Laboratories, and Pharmaceuticals.

(2) We then multiplied the ratios computed in step 1 by the total costs for each corresponding cost center from Worksheet B. This provided us with an estimate of salaries other than direct-patient care for each cost center.

(3) The estimated salaries for each of the cost centers on Worksheet B estimated in step 2 were subsequently summed and added to the direct patient care salary figure (resulting in a new total salaries figure).

(4) The estimated non-direct patient care salaries (see step 2) were then subtracted from their respective cost categories to avoid double-counting their values in the total costs.

As a result of this process, we moved from an estimated Wages and Salaries cost weight of 23.242 percent (as estimated using only direct patient care salaries as a percent of total costs) to a weight of 31.839 percent (capturing both direct patient care salaries and all other salary costs and, again, dividing that by total costs found on the Medicare cost report), as seen in Table 2.

The final adjustment made to this category is to include contract labor costs. These costs appear on the Medicare cost report; however, they are embedded in the Administrative and General category and cannot be disentangled using the Medicare cost reports alone. To move the appropriate expenses from the A&G category to Wages and Salaries, we used data from the 2012 SAS, which reported 2.3 of total expenses were spent on contract labor costs. We allocated 80 percent of that figure to Wages and Salaries. At the same time, we subtracted that same amount from A&G, where the contract labor expenses would be reported on the cost report. The 80 percent figure that was used was determined by taking salaries as a percentage of total compensation (excluding contract labor) from the 2012 MCR data. The resulting cost weight for Wages and Salaries increases to 33.650 percent.

TABLE 2—ESRD WAGES & SALARIES SHARE DETERMINATION

Components	Cost share (%)
08 MCR Salaries Direct Patient Care (DPC)	22.297
08 MCR Additional Salaries Weight (other than DPC)	4.041
08 Wage & Salary Weight normalized after adding separately billable services into the bundle	−1.373
08 Contract Labor (wages) (80% of BES CL share)	1.790
08 Final Wage & Salary Weight	26.755
12 MCR Salaries Direct Patient Care (DPC)	23.242
12 MCR Additional Salaries Weight (other than DPC)	8.597
12 Contract Labor (80% of SAS CL share)	1.811
12 Final Wage & Salary Weight	33.650

Benefits

The Benefits weight was derived from the MCR data for employee benefits for direct patient care and supplemented with data from the 2012 SAS to account for non-direct patient care benefits. The cost report only reflects health-related benefit costs associated with direct patient care; that is, it does not reflect retirement benefits. In order to include the benefits related to non-direct patient care, we estimated this marginal increase from the SAS Benefits weight. Unlike the MCR, data the SAS benefits share includes expenses related to the retirement and pension benefits. In order to be consistent with the cost report definitions we do not want to include the costs associated with retirement and pension benefits in the cost share weights. These costs are relatively small compared to the costs for the health related benefits, accounting for only 2.7 percent of the total benefits costs as reported on the SAS. Our method produced a Benefits

(both direct patient care and non-direct patient care) weight that was 1.824 percentage points larger (8.394 vs. 6.570) than the Benefits weight for direct patient care calculated directly from the cost reports. To avoid double-counting and to ensure all of the market basket weights still totaled 100 percent, we removed this additional 1.824 percentage point for Benefits from the residual category.

The final adjustment made to this category is to include contract labor costs. Once again, these costs appear on the Medicare cost report; however, they are embedded in the Administrative and General category and cannot be disentangled using the Medicare cost report alone. We applied 20 percent of total contract labor costs, as estimated using the SAS, to the Benefits cost weight calculated from the cost reports. The resulting cost weight for Benefits increases to 8.847 percent.

The Table 3 compares the 2008-based Benefits cost share derivation as detailed in the CY 2011 ESRD final rule (75 FR 49155–49156) to the proposed 2012-based Benefits cost share derivation as explained above.

TABLE 3—ESRD BENEFIT SHARE DETERMINATION

Components	Cost share (percent)
08 MCR Benefits	5.163
08 BES Additional Benefits Weight (Health only)	1.143
08 Contract Labor (20% of BES benefits share)	0.448
08 Final Benefit Weight	6.754
12 MCR Benefits	6.570
12 SAS Additional Benefits Weight (Health only)	1.824
12 Contract Labor (20% of SAS benefits share)	0.453
12 Final Benefit Weight	8.847

Utilities

We developed a weight for Utility expenses using the 2012 SAS data, as utilities are not separately identified on the Medicare cost report. The SAS data reports the percentage of expenses for 'purchased fuels (except motor fuels)', 'purchased electricity', and 'water, sewer, refuse, and other utilities.' We applied these ratios to the administrative and general cost share (net of contract labor and additional benefits). The resulting Electricity, Fuel (Natural Gas), and Water and Sewerage weights in the proposed 2012 ESRDB market basket are 0.973, 0.101, and 0.765 percent, respectively; together these categories yield a combined Utilities cost weight of 1.838 percent.

Pharmaceuticals

The proposed ESRDB market basket includes expenditures for all drugs, including formerly separately billable drugs and ESRD-related drugs that were covered under Medicare Part D before the ESRD PPS was implemented. We were able to calculate an expenditure weight for pharmaceuticals directly from the following cost centers on Worksheet B: columns 11 'Drugs Included in Composite Rate'; 12 'ESAs'; 13 'ESRD-Related Drugs; and drug expenses reported on line 5 column 10, 'Non-ESRD related drugs.' The Non-ESRD related drugs would include drugs and biologicals, administered during dialysis for non-ESRD related conditions as well as oral-only drugs. Since these are costs to the facility for providing ESRD treatment to the patient we propose to include them in the drug cost share weight. Vaccine expenditures, which are mandated as separately reimbursable, were excluded when calculating this cost weight. Section 1842(o)(1)(A)(iv) of the Act requires that influenza, pneumococcal, and hepatitis B vaccines described in subparagraph (A) or (B) of section 1861(s)(10) of the Act be paid based on 95 percent of average wholesale price (AWP) of the drug. Since these drugs are excluded from other prospective payment systems, we exclude them from the proposed ESRDB market basket, as well.

Finally, to avoid double-counting, the weight for the Pharmaceuticals category was reduced to exclude the estimated share of non-direct patient care salaries and benefits associated with the applicable drug cost centers referenced above. This resulted in a proposed ESRDB market basket weight for Pharmaceuticals of 16.510 percent. ESA expenditures accounted for 12.383 percentage points of the Pharmaceuticals weight, and all other drugs accounted for the remaining 4.127 percentage points (.438 percent for Drugs Included in Composite Rate, 3.534 percent for ESRD-Related Drugs, and 0.155 percent for Non-ESRD related drugs).

The 9-percentage point decrease in the pharmaceutical share between 2008 and 2012 (25.052 percent to 16.510 percent) is due largely to the drop in drug utilization. The drug percentage of the base rate used in 2011 was about 31 percent; however, the analysis conducted for the drug utilization adjustment showed that the drug portion of the base rate in 2014 would have fallen to only be 22 percent of the base rate had it been fully implemented. The cost report data corroborate the drop in drug costs for facilities over the same time frame.

Supplies

We calculated the weight for Supplies included in the bundled rate using the costs reported in the Supplies cost center (column 7 on Worksheet B) of the Medicare cost report. This total was divided by total expenses to derive a weight for the Supplies component in the ESRDB market basket. Finally, to avoid double-counting, the weight for the Supplies category was reduced to exclude the estimated share of non-direct patient care salaries and benefits associated with this cost center. The resulting proposed 2012-based ESRDB market basket weight for Supplies is 10.097 percent.

Lab Services

We calculated the weight for Lab Services included in the bundled rate using the costs reported in the Laboratory cost center (column 8 on Worksheet B) of the Medicare cost report. This total was divided by total expenses to derive a weight for the Lab component in the ESRDB market basket. Finally, to avoid double-counting, the weight for the Lab services category was reduced to exclude the estimated share of non-direct patient care salaries and benefits associated with this cost center. The resulting proposed 2012-based ESRDB market basket weight for Lab Services is 1.532 percent.

The cost weight for lab services is substantially lower than the 2008 ESRDB market basket lab weight of 5.497 percent. This is due to the change in the method used to determine lab costs. In 2008, we relied on MCR data for the cost share weight; however, the majority of lab services were performed by labs outside of the dialysis facility and those costs were not reported on the MCR. Therefore, in the 2008 ESRDB market basket we inflated the expenses reported for labs in ESRD facilities to reflect the use from other provider types. This adjustment factor was estimated based on the lab payment to dialysis facilities relative to the lab fee payment to other providers. For the rebased ESRDB market basket, the 2012 cost report data represents the expenses under the bundled payment system, and all of the expenses related to lab fees (whether in house or contracted through an outside lab) are reported in the MCR data.

Housekeeping & Operations

We calculated the weight for Housekeeping and Operations included in the bundled rate using the costs reported on worksheet A, column 8,

lines 3 & 4 of the Medicare Cost Report. This total was divided by total expenses to derive a weight for the Housekeeping and Operations component in the ESRDB market basket. Finally, to avoid double-counting, the weight for the Housekeeping & Operations category was reduced to exclude the estimated share of non-direct patient care salaries and benefits associated with this cost center. The resulting proposed 2012-based ESRDB market basket weight for Housekeeping and Operations is 3.785 percent.

Administrative and General (A&G)

We computed the proportion of total A&G expenditures using the A&G cost center data from Worksheet B (column 9) of the Medicare cost reports. As described above, we exclude contract labor from this cost category and apportion these costs to the salary and benefits cost weights. Similar to other expenditure category adjustments, we then reduced the computed weight to exclude salaries and benefits associated with the A&G cost center and the additional benefits for non-direct patient care. The resulting A&G cost weight is 13.331 percent. This A&G cost weight is then fully apportioned to derive detailed cost weights for Utilities, Telephone, Professional Fees, and All Other Goods and Services.

Professional Fees

A separate weight for Professional Fees was developed using the 2012 SAS data. Professional fees include fees associated with the following: purchased professional & technical services (such as accounting, bookkeeping, legal, management, consulting, and other professional services fees) and purchased advertising & promotional services. To estimate professional fees, we first calculated the ratio of SAS professional fees to SAS expenses that match the A&G expenses from the cost reports. We then applied this ratio to the A&G total cost weight to estimate the proportion of ESRD facility professional fees. The resulting weight for the proposed 2012-based ESRDB market basket is 0.617 percent. An estimated 87 percent of the expenses are considered labor-related and subsequently included in the proposed labor-related share, which is described in more detail below.

Telephone

Because telephone service expenses are not separately identified on the Medicare cost report, we developed a Telephone Services weight using the 2012 SAS expenses. We estimated a ratio of telephone services expenses to total administrative and general expenses from SAS. We applied this ratio to the total A&G cost weight from the cost reports to estimate the proportion of ESRD facility telephone expenses. The resulting proposed 2012-based ESRDB market basket cost weight for Telephone Services is 0.468 percent.

All Other Goods and Services

A separate weight for All Other Goods and Services was developed using the 2012 SAS data. All other Goods and Services include expenses for purchased software, professional liability insurance, data processing and other purchased computer services, and all other operating expenses not otherwise captured. We estimated a ratio of All Other Goods and Services expenses to Total Administrative and General expenses from SAS. We then applied this ratio to the total A&G cost weight from the cost reports to estimate the cost weight for ESRD facility All Other Goods and Services. The resulting proposed 2012-based ESRDB market basket cost weight for All Other Goods and Services is 10.407 percent.

Capital

We developed a market basket weight for the Capital category using data from Worksheet B of the Medicare cost reports. Capital-related costs include depreciation and lease expense for buildings, fixtures, movable equipment, property taxes, insurance, the costs of capital improvements, and maintenance expense for buildings, fixtures, and machinery. Because housekeeping as well as operation & maintenance costs are included in the Worksheet B cost center for Capital-Related costs (Worksheet B, column 2), we excluded the costs for these two categories and developed a separate expenditure category for housekeeping & operations, as detailed above. Similar to the methodology used for other market basket cost categories with a salaries component, we computed a share for non-direct patient care salaries and benefits associated with the Capital-related Machinery cost center. We used Worksheet B to develop two capital-related cost categories, one for Buildings and Equipment (based on worksheet B column 2 less housekeeping & operations), and one for Machinery (based on worksheet B column 4). We reasoned this delineation was particularly important given the critical role played by dialysis machines. Likewise, because price changes associated with Buildings and Equipment could move differently than those associated with Machinery, we felt that separate price proxies would be more appropriate. The resulting proposed 2012-based ESRDB market basket weights for Capital-related Buildings and Equipment and Capital-related Machinery are 8.378 and 3.870 percent, respectively.

Table 4 lists all of the cost categories and cost weights in the proposed CY 2012 ESRDB market basket compared to the cost categories and cost weights in the CY 2008 ESRDB market basket.

TABLE 4—COMPARISON OF THE PROPOSED CY 2012–BASED ESRDB MARKET BASKET COST CATEGORIES & WEIGHTS AND THE CY 2008–BASED ESRDB MARKET BASKET COST CATEGORIES & WEIGHTS.

2008 Cost category	2008 Cost weight (percent)	Proposed 2012 cost weight (percent)	Proposed 2012 cost category
Total	100.000	100.000	Total.
Compensation	33.509	42.497	Compensation.
Wages and Salaries	26.755	33.650	Wages and Salaries.
Employee Benefits	6.754	8.847	Employee Benefits.
Utilities	1.264	1.839	Utilities.
Electricity	0.621	0.973	Electricity.
Natural Gas	0.127	0.101	Natural Gas.
Water and Sewerage	0.516	0.765	Water and Sewerage.
All Other Materials	39.765	28.139	Medical Materials and Supplies.
Pharmaceuticals	25.052	16.510	Pharmaceuticals.
Supplies	9.216	10.097	Supplies.

TABLE 4—COMPARISON OF THE PROPOSED CY 2012–BASED ESRDB MARKET BASKET COST CATEGORIES & WEIGHTS AND THE CY 2008–BASED ESRDB MARKET BASKET COST CATEGORIES & WEIGHTS.—Continued

2008 Cost category	2008 Cost weight (percent)	Proposed 2012 cost weight (percent)	Proposed 2012 cost category
Lab Services	5.497	1.532	Lab Services.
All Other Services	15.929	15.277	All Other Goods and Services.
Telephone	0.597	0.468	Telephone Service.
Housekeeping and Operations	2.029	3.785	Housekeeping and Operations.
Labor-Related Services	2.768		
Prof. Fees: Labor-related	1.549	0.617	Professional Fees (Labor-related and NonLabor-related services).
All Other Labor-related	1.219		
NonLabor-Related Services	10.535	10.407	All Other Goods and Services.
Prof. Fees: Nonlabor-related	0.224		
All Other Nonlabor-related	10.311		
Capital Costs	9.533	12.248	Capital Costs.
Capital Related-Building and Equipment	7.459	8.378	Capital Related-Building and Equipment.
Capital Related-Machinery	2.074	3.870	Capital Related-Machinery.

Note: Totals may not sum to 100.000 percent due to rounding.

ii. Proposed Price Proxies for the CY 2012 ESRDB Market Basket

After developing the cost weights for the proposed CY 2012-based ESRDB market basket, we selected the most appropriate wage and price proxies currently available to represent the rate of price change for each expenditure category. We base the price proxies on Bureau of Labor Statistics (BLS) data and group them into one of the following BLS categories:

• *Employment Cost Indexes.* Employment Cost Indexes (ECIs) measure the rate of change in employment wage rates and employer costs for employee benefits per hour worked. These indexes are fixed-weight indexes and strictly measure the change in wage rates and employee benefits per hour. ECIs are superior to Average Hourly Earnings (AHE) as price proxies for input price indexes because they are not affected by shifts in occupation or industry mix, and because they measure pure price change and are available by both occupational group and by industry. The industry ECIs are based on the North American Classification System (NAICS) and the occupational ECIs are based on the Standard Occupational Classification System (SOC).

• *Producer Price Indexes.* Producer Price Indexes (PPIs) measure price changes for goods sold in other than retail markets. PPIs are used when the purchases of goods or services are made at the wholesale level.

• *Consumer Price Indexes.* Consumer Price Indexes (CPIs) measure change in the prices of final goods and services bought by consumers. CPIs are only used when the purchases are similar to those of retail consumers rather than purchases at the wholesale level, or if no appropriate PPIs were available.

We evaluated the price proxies using the criteria of reliability, timeliness, availability, and relevance:

• *Reliability.* Reliability indicates that the index is based on valid statistical methods and has low sampling variability. Widely accepted statistical methods ensure that the data were collected and aggregated in a way that can be replicated. Low sampling variability is desirable because it indicates that the sample reflects the typical members of the population. (Sampling variability is variation that occurs by chance because only a sample was surveyed rather than the entire population.)

• *Timeliness.* Timeliness implies that the proxy is published regularly, preferably at least once a quarter. The market baskets are updated quarterly, and therefore, it is important for the underlying price proxies to be up-to-date, reflecting the most recent data available. We believe that using proxies that are published regularly (at least quarterly, whenever possible) helps to ensure that we are using the most recent data available to update the market basket. We strive to use publications that are disseminated frequently, because we believe that this is an optimal way to stay abreast of the most current data available.

• *Availability.* Availability means that the proxy is publicly available. We prefer that our proxies are publicly available because this will help ensure that our market basket updates are as transparent to the public as possible. In addition, this enables the public to be able to obtain the price proxy data on a regular basis.

• *Relevance.* Relevance means that the proxy is applicable and representative of the cost category weight to which it is applied. The CPIs, PPIs, and ECIs that we have selected to propose in this regulation meet these criteria. Therefore, we believe that they continue to be the best measure of price changes for the cost categories to which they would be applied.

Table 7 lists all price proxies for the proposed revised and rebased ESRDB market basket. Below is a detailed explanation of the price proxies used for each cost category weight.

Wages and Salaries

We will continue using an ECI blend for wages and salaries in the proposed 2012-based ESRDB market basket. However, we are proposing to expand the number of occupation categories and associated ECIs from two to four based on FTE data from ESRD Medicare Cost Reports and the availability of ECIs from BLS. We calculated weights for the Wages and Salaries sub-categories using 2012 FTE data and associated 2012 Average Mean Wage data from the Bureau of Labor Statistics' Occupational Employment Statistics.

Wages and Salaries—Health Related

We are proposing to continue using the ECI for Wages & Salaries for Hospitals (All Civilian) (BLS series code #CIU1026220000000I). Of the two health-related ECIs that we considered (''Hospitals'' and ''Health Care and Social Assistance''), the wage distribution within the Hospital NAICS sector (622) is more closely related to the wage distribution of ESRD facilities than it is to the wage distribution of the

Health Care and Social Assistance NAICS sector (62).

The Wages and Salaries—Health Related subcategory weight within the Wages and Salaries cost category is 80percent. The ESRD Medicare Cost Report FTE categories used to define the Wages and Salaries—Health Related subcategory include ''Physicians,'' ''Registered Nurses,'' ''Licensed Practical Nurses,'' ''Nurses' Aides,'' ''Technicians,'' and ''Dieticians.''

The current 2008-based ESRD Market Basket uses the ECI for Wages & Salaries for Hospitals (All Civilian) for 50 percent of Wages and Salaries.

Wages and Salaries—Management

We propose using the ECI for Wages & Salaries for Management, Business, and Financial (Private Industry) (BLS series code #CIU2020000110000I). We feel this ECI is the most appropriate price proxy to measure the price growth of management functions at ESRD facilities. Furthermore, we regularly use this ECI-wages for management, business, and financial in our other market baskets, such as the MEI.

The Wages and Salaries—Management subcategory weight within the Wages and Salaries cost category is 8 percent. The ESRD Medicare Cost Report FTE category used to define the Wages and Salaries—Management subcategory is ''Management.''

Wages and Salaries—Administrative

We propose using the ECI for Wages & Salaries for Office and Administrative Support (Private Industry) (BLS series code #CIU2020000220000I). We feel this ECI is the most appropriate price proxy to measure the price growth of administrative support at ESRD facilities. Furthermore, we regularly use this ECI for administrative wages in our other market baskets, such as the MEI.

The Wages and Salaries—Administrative subcategory weight within the Wages and Salaries cost category is 7 percent. The ESRD Medicare Cost Report FTE category used to define the Wages and Salaries—Administrative subcategory is ''Administrative.''

Wages and Salaries—Services

We propose using the ECI for Wages & Salaries for Service Occupations (Private Industry) (BLS series code #CIU2020000300000I). We feel this ECI is the most appropriate price proxy to measure the price growth of all other non-health related, non-management, and non-administrative service support at ESRD facilities. Furthermore, we regularly use this ECI for all other service wages in our other market baskets, such as the MEI.

The Wages and Salaries—Services subcategory weight within the Wages and Salaries cost category is 6 percent. The ESRD Medicare Cost Report FTE categories used to define the Wages and Salaries—Services subcategory are ''Social Workers'' and ''Other.''

Table 5 lists the four ECI series and the corresponding weights used to construct the proposed ECI blend for wages and salaries. We feel this new ECI blend is the most appropriate price proxy to measure the growth of wages and salaries faced by ESRD facilities.

TABLE 5—ECI BLEND FOR WAGES AND SALARIES IN THE PROPOSED 2012 BASED ESRDB MARKET BASKET

Cost category	ECI Series	Weight (%)
Wages and Salaries—Health Related	ECI—Wages & Salaries—Hospital (All Civilian)	80
Wages and Salaries—Management	ECI—Wages & Salaries—Management, Business, and Financial (Private Industry).	7
Wages and Salaries—Administrative	ECI—Wages & Salaries—Office and Administrative Support (Private Industry)	7
Wages and Salaries—Services	ECI—Wages & Salaries—Service Occupations (Private Industry)	6

The current 2008-based ESRDB market basket uses a 50 percent/50 percent blend of the ''ECI—Wages & Salaries—Hospital (All Civilian)'' and the ''ECI—Wages and Salaries—Healthcare and Social Assistance'' for the wages and salaries ECI blend.

Benefits

We will continue using an ECI blend for Benefits in the proposed 2012-based ESRDB market basket; however, we are proposing to expand the number of occupation categories and associated ECIs from two to four based on the components of the proposed Wage and Salaries ECI blend.

Benefits—Health Related

We are proposing to continue using the ECI for Benefits for Hospitals (All Civilian) to measure price growth of this subcategory. The ECI for Benefits for Hospitals is calculated using the ECI for Total Compensation for Hospitals (BLS series code # CIU1016220000000I) and the relative importance of wages and salaries within total compensation. We believe this constructed ECI series is technically appropriate for the reason stated above in the wages and salaries price proxy section.

Benefits—Management

We propose using the ECI for Benefits for Management, Business, and Financial (Private Industry) to measure price growth of this subcategory. The ECI for Benefits for Management, Business, and Financial is calculated using the ECI for Total Compensation for Management, Business, and Financial (BLS series code # CIU2010000110000I) and the relative importance of wages and salaries within total compensation. We believe this constructed ECI series is technically appropriate for the reason stated above in the wages and salaries price proxy section.

Benefits—Administrative

We propose using the ECI for Benefits for Office and Administrative Support (Private Industry) to measure price growth of this subcategory. The ECI for Benefits for Office and Administrative Support is calculated using the ECI for Total Compensation for Office and Administrative Support (BLS series code # CIU2010000220000I) and the relative importance of wages and salaries within total compensation. We believe this constructed ECI series is technically appropriate for the reason stated above in the wages and salaries price proxy section.

Benefits—Services

We propose using the ECI for Benefits for Service Occupations (Private Industry) to measure price growth of this subcategory. The ECI for Benefits for Service Occupations is calculated using the ECI for Total Compensation for Service Occupations (BLS series code # CIU2030000300000I) and the relative importance of wages and salaries within total compensation. We believe this constructed ECI series is technically appropriate for the reason stated above in the wages and salaries price proxy section.

We feel the new benefits ECI blend is the most appropriate price proxy to measure the growth of prices faced by

ESRD facilities. Table 6 lists the four ECI series and the corresponding weights used to construct the proposed benefits ECI blend.

TABLE 6—BENEFITES ECI BLEND IN THE PROPOSED 2012–BASED ESRDB MARKET BASKET

Cost category	ECI Series	Weight (%)
Benefits—Health Related	ECI—Benefits—Hospital (All Civilian)	80
Benefits—Management	ECI—Benefits—Management, Business, and Financial (Private Industry)	7
Benefits—Administrative	ECI—Benefits—Office and Administrative Support (Private Industry)	7
Benefits—Services	ECI—Benefits—Service Occupations (Private Industry)	6

The current 2008-based ESRDB market basket uses a 50 percent/50 percent blend of the ''ECI—Benefits—Hospital (All Civilian)'' and the ''ECI—Benefits—Healthcare and Social Assistance'' for the benefits ECI blend.

Electricity

We propose to continue using the PPI for Commercial Electric Power (BLS series code #WPU0542) to measure the price growth of this cost category. This is the same proxy used in the current 2008-based ESRDB market basket.

Natural Gas

We propose to continue using the PPI for Commercial Natural Gas (BLS series code #WPU0552) to measure the price growth of this cost category. This is the same proxy used in the current 2008-based ESRDB market basket.

Water and Sewerage

We propose to continue using the CPI for Water and Sewerage Maintenance (BLS series code #CUUR0000SEHG01) to measure the price growth of this cost category. This is the same proxy used in the current 2008-based ESRDB market basket.

Pharmaceuticals

We propose to change the price proxy used for the pharmaceuticals cost category. A recent Health and Human Services Office of the Inspector General (OIG) report titled ''Update: Medicare Payment for End Stage Renal Disease Drugs'' recommended that CMS consider updating the ESRD payment bundle using a factor that takes into account drug acquisition costs. CMS had responded to this recommendation by stating that we would consider these findings in the continual evaluation of the ESRD market basket, particularly during the next rebasing and revising of the market basket index.[1]

Drug acquisition cost data is neither publicly available nor the methods used to determine it transparent, and, therefore, wouldn't meet our price proxy criteria of relevance, reliability, transparency, and public availability. However, after considering several viable options that do meet the criteria we are proposing to use the PPI: Vitamin, Nutrient, and Hematinic Preparations (BLS series code #WPU063807). This index includes drugs that are most similar to ESAs and other drugs used in the ESRD setting, such as iron supplements. The definition of a hematinic is a medicine that increases the hemoglobin content of the blood, and these types of drugs are used to treat iron-deficiency anemia essential for normal erythropoiesis.

We believe the PPI: Vitamin, Nutrient, and Hematinic Preparations to be the most technically appropriate index available to measure the price growth of the pharmaceuticals cost category in the proposed 2012-based ESRDB market basket. The current 2008-based ESRDB market basket uses the PPI: Pharmaceuticals for Human Use.

Supplies

We propose using the PPI for Surgical and Medical Instruments (BLS series code #WPU1562) since it excludes orthopedic, prosthetic, ophthalmic, and dental type medical equipment and devices, which are not likely to be used extensively in the ESRD setting. The types of equipment under Surgical and Medical Instruments, particularly blood transfusion and IV equipment, seem most similar to the medical equipment and supplies that would be used in the ESRD setting. The current 2008-based ESRDB market basket uses the PPI for Medical, Surgical, and Personal Aid Devices.

Lab Services

We propose to continue using the PPI for Medical Laboratories (BLS series code #PCU621511621511) to measure the price growth of this cost category. This is the same proxy used in the current 2008-based ESRDB market basket.

Telephone Service

We propose to continue using the CPI for Telephone Services (BLS series code #CUUR0000SEED) to measure the price growth of this cost category. This is the same proxy used in the current 2008-based ESRDB market basket.

Housekeeping and Operations

We propose to continue using the PPI for Cleaning and Building Maintenance Services (BLS series code #WPU49) to measure the price growth of this cost category. This is the same proxy used in the current 2008-based ESRDB market basket.

Professional Fees

We propose to continue using the ECI (Compensation) for Professional and Related Occupations (Private Industry) (BLS series code # CIU2010000120000I) to measure the price growth of this cost category. This is the same proxy used in the current 2008-based ESRDB market basket.

All Other Goods and Services

We propose using the PPI for Finished Goods less Foods and Energy (BLS series code #WPUFD4131) as the price proxy for the All Other Goods and Services cost category. This PPI series is used in most of CMS' other market baskets to measure the expenses for the residual category of all other goods and services. It is more consistent with the purchase of items at a wholesale rather than a consumer level. The current 2008-based ESRDB market basket (specifically, the ''All Other Non Labor-Related Services'' cost category) uses the CPI–U, All Items less Foods and Energy.

Capital-Related Building and Equipment

We propose using the PPI for Lessors of Nonresidential Buildings (BLS series code #PCU531120531120) as it represents the types of fixed capital expenses most likely faced by ESRD facilities. We also use this proxy in the MEI as the fixed capital proxy for physicians. We believe the PPI for Lessors of Nonresidential Buildings is more appropriate as fixed capital expenses in both the ESRD and physician office setting should be more congruent with trends in business office space costs rather than residential costs. The current 2008-based ESRDB market

[1] *http://oig.hhs.gov/oei/reports/oei-03-12-00550.asp.*

basket uses the CPI for Owners' Equivalent Rent of Residences.

Capital Related Machinery

We propose to continue using the PPI for Electrical Machinery and Equipment (BLS series code #WPU117) to measure the price growth of this cost category. This is the same proxy used in the current 2008-based ESRDB market basket.

Table 7 shows all the proposed price proxies for the proposed CY 2012-based ESRDB Market Basket.

TABLE 7—PROPOSED PRICE PROXIES FOR THE CY 2012-BASED ESRDB MARKET BASKET

Cost category	Price proxy	Cost weight %
Compensation		42.497
Wages and Salaries		33.650
Health-related Wages	ECI—Wages & Salaries—Hospital (Civilian)	26.920
Management Wages	ECI—Wages & Salaries—Management, Business, and Financial (Private)	2.356
Administrative Wages	ECI—Wages & Salaries—Office and Administrative Support (Private)	2.356
Service Wages	ECI—Wages & Salaries—Service Occupations (Private)	2.019
Employee Benefits		8.847
Health-related Benefits	ECI—Benefits—Hospital (Civilian)	7.078
Management Benefits	ECI—Benefits—Management, Business, and Financial (Private)	0.619
Administrative Benefits	ECI—Benefits—Office and Administrative Support (Private)	0.619
Service Benefits	ECI—Benefits—Service Occupations (Private)	0.531
Utilities		1.839
Electricity	PPI—Commercial Electric Power	0.973
Natural Gas	PPI—Commercial Natural Gas	0.101
Water and Sewerage	CPI—Water and Sewerage Maintenance	0.765
Medical Materials and Supplies		28.139
Pharmaceuticals	PPI—Vitamin, Nutrient, and Hematinic Preparations	16.510
Supplies	PPI—Surgical and Medical Instruments	10.097
Lab Services	PPI—Medical Laboratories	1.532
All Other Goods and Services		15.277
Telephone Service	CPI—Telephone Services	0.468
Housekeeping and Operations	PPI—Cleaning and Building Maintenance Services	3.785
Professional Fees	ECI—Compensation—Professional and Related Occupations (Private)	0.617
All Other Goods and Services	PPI—Finished Goods less Foods and Energy	10.407
Capital Costs		12.248
Capital Related Building and Equipment	PPI—Lessors of Nonresidential Buildings	8.378
Capital Related Machinery	PPI—Electrical Machinery and Equipment	3.870
Total		100.000

Note: Totals may not sum to 100.000% due to rounding.

iii. Proposed Market Basket Estimate for the CY 2015 ESRDB PPS Update

As discussed previously in this proposed rule, beginning with the CY 2015 ESRD PPS update, we are proposing to adopt the CY 2012-based ESRDB market basket as the appropriate market basket of goods and services for the ESRD PPS.

Based on the IHS Global Insight, Inc. (IGI) first quarter 2014 forecast with history through the fourth quarter of 2013, the most recent estimate of the proposed CY 2012-based ESRDB market basket for CY 2015 is 2.0 percent. IGI is a nationally recognized economic and financial forecasting firm that contracts with CMS to forecast the components of the CMS market baskets. Based on IGI's first quarter 2014 forecast with history through the fourth quarter of 2013, the estimate of the current CY 2008-based ESRDB market basket for CY 2015 is 2.7 percent.

Table 8 compares the proposed CY 2012-based ESRDB market basket and the CY 2008-based ESRDB market basket percent changes. For the historical period between CY 2011 and CY 2013, the average difference between the two market baskets is -1.8 percentage points. This is primarily the result of the lower pharmaceutical cost share combined with the proposed revised price proxy for the pharmaceutical cost category. For the CY 2014 and CY 2015 forecasts, the difference in the market basket forecasts are mainly driven by the same factors as in the historical period; however, it is important to note that the differences between the two market baskets are projected to be smaller as the growth in the price proxy for the pharmaceutical category are projected to grow at more similar growth rates in the projected period than the growth rates in the recent historical period.

TABLE 8—PROPOSED CY 2012-BASED ESRDB MARKET BASKET AND CY 2008 BASED ESRDB MARKET BASKET, PERCENT CHANGES: 2011–2015

Calendar Year (CY)	Proposed Rebased CY 2012-based ESRDB Market Basket	CY 2008-Based ESRDB Market Basket
Historical data.		
CY 2011	1.2	2.8
CY 2012	1.4	3.4
CY 2013	1.1	3.0
Average CY 2011–2013	1.3	3.1
Forecast:		
CY 2014	1.8	2.3

TABLE 8—PROPOSED CY 2012-BASED ESRDB MARKET BASKET AND CY 2008 BASED ESRDB MARKET BASKET, PERCENT CHANGES: 2011–2015—Continued

Calendar Year (CY)	Proposed Rebased CY 2012-based ESRDB Market Basket	CY 2008-Based ESRDB Market Basket
CY 2015	2.0	2.7

Source: IHS Global Insight, Inc. 1st quarter 2014 forecast with historical data through 4th quarter 2013.

c. Proposed Productivity Adjustment

Under section 1881(b)(14)(F)(i) of the Act, as amended by section 3401(h) of the Affordable Care Act, for CY 2012 and each subsequent year, the ESRD market basket percentage increase factor shall be reduced by the productivity adjustment described in section 1886(b)(3)(B)(xi)(II) of the Act. The statute defines the productivity adjustment as equal to the 10-year moving average of changes in annual economy-wide private nonfarm business multifactor productivity (MFP) (as projected by the Secretary for the 10-year period ending with the applicable fiscal year, year, cost reporting period, or other annual period) (the ''MFP adjustment''). The Bureau of Labor Statistics (BLS) is the agency that publishes the official measure of private nonfarm business MFP. Please see *http://www.bls.gov/mfp* to obtain the BLS historical published MFP data. We note that the proposed and final methodology for calculating and applying the MFP adjustment to the ESRD payment update is similar to the methodology used in other payment systems, as required by section 3401 of the Affordable Care Act.

The projection of MFP is currently produced by IGI. The details regarding the methodology for forecasting MFP and how it is applied to the market basket were finalized in the CY 2012 ESRD PPS final rule (76 FR 70232 through 70234). Using this method and the IGI forecast for the first quarter of 2014 of the 10-year moving average of MFP, the CY 2015 MFP factor we would have proposed is 0.4 percent. As discussed further below, however, section 1881(b)(F)(i)(III) of the Act, as added by section 217(b)(2) of PAMA, requires the Secretary to implement a 0.0 percent payment update in CY 2015.

d. Calculation of the Proposed ESRDB Market Basket Update, Adjusted for Multifactor Productivity for CY 2015

Under section 1881(b)(14)(F) of the Act, beginning in CY 2012, ESRD PPS payment amounts shall be annually increased by an ESRD market basket percentage increase factor reduced by the productivity adjustment. For CY 2015, section 1881(b)(14)(F)(i)(III) of the Act, as added by section 217(b)(2) of PAMA, requires the Secretary to implement a 0.0 percent ESRDB market basket increase to the ESRD PPS base rate. In addition, we interpret the reference to ''[n]otwithstanding subclause (III)'' that was added to amended section 1881(b)(14)(F)(i)(III) as precluding the application of the multi-factor productivity (MFP) adjustment in 2015. As a result of these provisions, the proposed CY 2015 ESRD market basket increase is 0.0 percent. We note that if PAMA had not been enacted the proposed 2012-based ESRDB market basket update less productivity for CY 2015 would have been 1.6 percent, or 2.0 percent less 0.4 percentage point.

e. Labor-Related Share

We define the labor-related share (LRS) as those expenses that are labor-intensive and vary with, or are influenced by, the local labor market. The labor-related share of a market basket is determined by identifying the national average proportion of operating costs that are related to, influenced by, or vary with the local labor market. The labor-related share is typically the sum of Wages and Salaries, Benefits, Professional Fees, Labor-related Services, and a portion of the Capital share from a given market basket.

We propose to use the proposed 2012-based ESRDB market basket costs to determine the proposed labor-related share for ESRD facilities of 50.673 percent, as shown in Table 9 below. These figures represent the sum of Wages and Salaries, Benefits, Housekeeping and Operations, 87 percent of the weight for Professional Fees (details discussed below), and 46 percent of the weight for Capital-related Building and Equipment expenses (details discussed below). We note that this is a similar methodology used to compute the labor-related share used from CY 2011 through CY 2014.

TABLE 9—PROPOSED CY 2015 LABOR-RELATED SHARE AND CY 2014 ESRDB LABOR-RELATED SHARE

Cost category	Proposed CY 2015 ESRDB labor-related share (percent)	CY 2014 ESRDB labor-related share (percent)
Wages	33.650	26.755
Benefits	8.847	6.754
Housekeeping and operations	3.785	2.029
Professional fees (labor-related)	0.537	2.768
Capital labor-related	3.854	3.431
Total	50.673	41.737

The labor-related share for Professional Fees (87 percent) reflects the proportion of ESRD facilities' professional fees expenses that we believe vary with local labor market. We conducted a survey of ESRD facilities in 2008 to better understand the proportion of contracted professional services that ESRD facilities typically purchase outside of their local labor market. These purchased professional services include functions such as accounting and auditing, management consulting, engineering, and legal services. Based on the survey results, we determined that, on average, 87 percent of professional services are purchased from local firms and 13 percent are purchased from businesses located outside of the ESRD facility's local labor market. Thus, we are proposing to

include 87 percent of the cost weight for Professional Fees in the labor-related share, the same percentage as used in prior years.

The labor-related share for capital-related expenses (46 percent of ESRD facilities' adjusted Capital-related Building and Equipment expenses) reflects the proportion of ESRD facilities' capital-related expenses that we believe varies with local labor market wages. Capital-related expenses are affected in some proportion by variations in local labor market costs (such as construction worker wages) that are reflected in the price of the capital asset. However, many other inputs that determine capital costs are not related to local labor market costs, such as interest rates. The 46-percent figure is based on regressions run for the inpatient hospital capital PPS in 1991 (56 FR 43375). We use a similar methodology to calculate capital-related expenses for the labor-related shares for rehabilitation facilities (70 FR 30233), psychiatric facilities, long-term care facilities, and skilled nursing facilities (66 FR 39585).

3. The Proposed CY 2015 ESRD PPS Wage Indices

a. Background

Section 1881(b)(14)(D)(iv)(II) of the Act provides that the ESRD PPS may include a geographic wage index payment adjustment, such as the index referred to in section 1881(b)(12)(D) of the Act. In the CY 2011 ESRD PPS final rule (75 FR 49117), we finalized for the ESRD PPS the use of the Office of Management and Budget's (OMB) Core-Based Statistical Areas (CBSAs)-based geographic area designations described in OMB bulletin 03–04, issued June 6, 2003 as the basis for revising the urban and rural areas and their corresponding wage index values. This bulletin, as well as subsequent bulletins, is available online at *http://www.whitehouse.gov/omb/bulletins_index2003-2005.*

We also finalized that we would use the urban and rural definitions used for the Medicare IPPS but without regard to geographic reclassification authorized under section 1886(d)(8) and (d)(10) of the Act. In the CY 2012 ESRD PPS final rule (76 FR 70239), we finalized that, under the ESRD PPS, we will continue to utilize the ESRD PPS wage index methodology, first established under the basic case-mix adjusted composite rate payment system, for updating the wage index values using the OMB's CBSA-based geographic area designations to define urban and rural areas.

b. Proposed Implementation of New Labor Market Delineations

OMB publishes bulletins regarding CBSA changes, including changes to CBSA numbers and titles. In accordance with our established methodology, we have historically adopted via rulemaking CBSA changes that are published in the latest OMB bulletin. On February 28, 2013, OMB issued OMB Bulletin No. 13–01, which established revised delineations for Metropolitan Statistical Areas, Micropolitan Statistical Areas, and Combined Statistical Areas, and provided guidance on the use of the delineations of these statistical areas. A copy of this bulletin may be obtained at *http://www.whitehouse.gov/sites/default/files/omb/bulletins/2013/b-13-01.pdf.* According to OMB, ''[t]his bulletin provides the delineations of all Metropolitan Statistical Areas, Metropolitan Divisions, Micropolitan Statistical Areas, Combined Statistical Areas, and New England City and Town Areas in the United States and Puerto Rico based on the standards published on June 28, 2010, in the **Federal Register** (75 FR 37246–37252) and Census Bureau data.'' In this CY 2015 ESRD PPS proposed rule, when referencing the new OMB geographic boundaries of statistical areas, we are using the term ''delineations'' rather than the term ''definitions'' that we have used in the past, consistent with OMB's use of the terms (75 FR 37249). Because the bulletin was not issued until February 28, 2013, with supporting data not available until later, and because the changes made by the bulletin and their ramifications needed to be extensively reviewed and verified, we were unable to undertake such a lengthy process before publication of the FY 2014 IPPS/LTCH PPS proposed rule and, thus, did not implement changes to the hospital wage index for FY 2014 based on these new CBSA delineations.

Likewise, for the same reasons, the CY 2014 ESRD PPS wage index (based upon the pre-floor, pre-reclassified hospital wage data, which is unadjusted for occupational mix) also did not reflect the new CBSA delineations. In the FY 2015 IPPS/LTCH PPS proposed rule, we proposed to implement the new CBSA delineations as described in the February 28, 2013 OMB Bulletin No. 13–01, beginning with the FY 2015 IPPS wage index (79 FR 28054 through 28055).

Similarly, in this CY 2015 ESRD PPS proposed rule, we are proposing to implement the new CBSA delineations as described in the February 28, 2013 OMB Bulletin No. 13–01, beginning with the CY 2015 ESRD PPS wage index. We believe that the most current CBSA delineations accurately reflect the local economies and wage levels of the areas where facilities are located, and we believe that it is important for the ESRD PPS to use the latest CBSA delineations available in order to maintain an up-to-date payment system that accurately reflects the reality of populations shifts and labor market conditions. We have reviewed our findings and impacts relating to the new CBSA delineations using the most recent data available at the time of this proposed rule, and have concluded that there is no compelling reason to further delay the implementation of the CBSA delineations as set forth in OMB Bulletin 13–01.

In order to implement these changes for the ESRD PPS, it is necessary to identify the new labor market area delineation for each county and facility in the country. For example, if we adopt the new CBSA delineations, there would be new CBSAs, urban counties that would become rural, rural counties that would become urban, and existing CBSAs that would be split apart. Because the wage index of urban areas is typically higher than that of rural areas, ESRD facilities currently located in rural counties that would become urban if we adopt the new CBSA delineations would generally experience an increase in their wage index values. We have identified 105 counties and 113 facilities that would move from rural to urban status if we adopt the new CBSA delineations beginning in CY 2015. Table 10: (CY 2015 Proposed Rural to Urban CBSA Crosswalk) shows the CBSA delineations for CY 2014 and the rural wage index values proposed for CY 2015 based on those delineations, compared to the proposed CBSA delineations for CY 2015 and the proposed urban wage index values for CY 2015 based on the new delineations, and the percentage change in these values for those counties that would change from rural to urban if we adopt the new CBSA delineations. If we adopt the new OMB delineations illustrated in Table 10 below, approximately 100 facilities would experience an increase in their wage index values.

TABLE 10—CY 2015 PROPOSED RURAL TO URBAN CBSA CROSSWALK

County name	State	ESRD PPS CY 2014 CBSA delineations			Proposed ESRD PPS CY 2015 CBSA delineations			Change in value (percent)
		CBSA	Urban/Rural	Wage index value	CBSA	Urban/Rural	Wage index value	
BALDWIN	AL	01	RURAL	0.6981	19300	URBAN	0.7279	4.27
PICKENS	AL	01	RURAL	0.6981	46220	URBAN	0.8288	18.72
COCHISE	AZ	03	RURAL	0.9159	43420	URBAN	0.8970	−2.06
LITTLE RIVER	AR	04	RURAL	0.7265	45500	URBAN	0.7390	1.72
WINDHAM	CT	07	RURAL	1.1292	49340	URBAN	1.1536	2.16
SUSSEX	DE	08	RURAL	1.0248	41540	URBAN	0.9296	−9.29
CITRUS	FL	10	RURAL	0.8010	26140	URBAN	0.7653	−4.46
GULF	FL	10	RURAL	0.8010	37460	URBAN	0.7861	−1.86
HIGHLANDS	FL	10	RURAL	0.8010	42700	URBAN	0.8011	0.01
SUMTER	FL	10	RURAL	0.8010	45540	URBAN	0.8125	1.44
WALTON	FL	10	RURAL	0.8010	18880	URBAN	0.8260	3.12
LINCOLN	GA	11	RURAL	0.7425	12260	URBAN	0.9213	24.08
MORGAN	GA	11	RURAL	0.7425	12060	URBAN	0.9358	26.03
PEACH	GA	11	RURAL	0.7425	47580	URBAN	0.7570	1.95
PULASKI	GA	11	RURAL	0.7425	47580	URBAN	0.7570	1.95
KALAWAO	HI	12	RURAL	0.9953	27980	URBAN	0.9510	−4.45
MAUI	HI	12	RURAL	0.9953	27980	URBAN	0.9510	−4.45
BUTTE	ID	13	RURAL	0.7425	26820	URBAN	0.8966	20.75
DE WITT	IL	14	RURAL	0.8363	14010	URBAN	0.8935	6.84
JACKSON	IL	14	RURAL	0.8363	16060	URBAN	0.8354	−0.11
WILLIAMSON	IL	14	RURAL	0.8363	16060	URBAN	0.8354	−0.11
SCOTT	IN	15	RURAL	0.8454	31140	URBAN	0.8319	−1.60
UNION	IN	15	RURAL	0.8454	17140	URBAN	0.8942	5.77
PLYMOUTH	IA	16	RURAL	0.8483	43580	URBAN	0.8948	5.48
KINGMAN	KS	17	RURAL	0.7838	48620	URBAN	0.8503	8.48
ALLEN	KY	18	RURAL	0.7770	14540	URBAN	0.8403	8.15
BUTLER	KY	18	RURAL	0.7770	14540	URBAN	0.8403	8.15
ACADIA	LA	19	RURAL	0.7608	29180	URBAN	0.7896	3.79
IBERIA	LA	19	RURAL	0.7608	29180	URBAN	0.7896	3.79
ST. JAMES	LA	19	RURAL	0.7608	35380	URBAN	0.8778	15.38
TANGIPAHOA	LA	19	RURAL	0.7608	25220	URBAN	0.9487	24.70
VERMILION	LA	19	RURAL	0.7608	29180	URBAN	0.7896	3.79
WEBSTER	LA	19	RURAL	0.7608	43340	URBAN	0.8347	9.71
ST. MARYS	MD	21	RURAL	0.8586	15680	URBAN	0.8625	0.45
WORCESTER	MD	21	RURAL	0.8586	41540	URBAN	0.9296	8.27
MIDLAND	MI	23	RURAL	0.8232	33220	URBAN	0.7964	−3.26
MONTCALM	MI	23	RURAL	0.8232	24340	URBAN	0.8832	7.29
FILLMORE	MN	24	RURAL	0.9057	40340	URBAN	1.1384	25.69
LE SUEUR	MN	24	RURAL	0.9057	33460	URBAN	1.1162	23.24
MILLE LACS	MN	24	RURAL	0.9057	33460	URBAN	1.1162	23.24
SIBLEY	MN	24	RURAL	0.9057	33460	URBAN	1.1162	23.24
BENTON	MS	25	RURAL	0.7603	32820	URBAN	0.9069	19.28
YAZOO	MS	25	RURAL	0.7603	27140	URBAN	0.7932	4.33
GOLDEN VALLEY	MT	27	RURAL	0.9055	13740	URBAN	0.8718	-3.72
HALL	NE	28	RURAL	0.8957	24260	URBAN	0.9253	3.30
HAMILTON	NE	28	RURAL	0.8957	24260	URBAN	0.9253	3.30
HOWARD	NE	28	RURAL	0.8957	24260	URBAN	0.9253	3.30
MERRICK	NE	28	RURAL	0.8957	24260	URBAN	0.9253	3.30
JEFFERSON	NY	33	RURAL	0.8226	48060	URBAN	0.8417	2.32
YATES	NY	33	RURAL	0.8226	40380	URBAN	0.8783	6.77
CRAVEN	NC	34	RURAL	0.7963	35100	URBAN	0.8547	7.33
DAVIDSON	NC	34	RURAL	0.7963	49180	URBAN	0.8660	8.75
GATES	NC	34	RURAL	0.7963	47260	URBAN	0.9156	14.98
IREDELL	NC	34	RURAL	0.7963	16740	URBAN	0.9123	14.57
JONES	NC	34	RURAL	0.7963	35100	URBAN	0.8547	7.33
LINCOLN	NC	34	RURAL	0.7963	16740	URBAN	0.9123	14.57
PAMLICO	NC	34	RURAL	0.7963	35100	URBAN	0.8547	7.33
ROWAN	NC	34	RURAL	0.7963	16740	URBAN	0.9123	14.57
OLIVER	ND	35	RURAL	0.7125	13900	URBAN	0.7251	1.77
SIOUX	ND	35	RURAL	0.7125	13900	URBAN	0.7251	1.77
HOCKING	OH	36	RURAL	0.8315	18140	URBAN	0.9499	14.24
PERRY	OH	36	RURAL	0.8315	18140	URBAN	0.9499	14.24
COTTON	OK	37	RURAL	0.7824	30020	URBAN	0.7948	1.58
JOSEPHINE	OR	38	RURAL	1.0120	24420	URBAN	1.0123	0.03
LINN	OR	38	RURAL	1.0120	10540	URBAN	1.0919	7.90
ADAMS	PA	39	RURAL	0.8730	23900	URBAN	1.0142	16.17
COLUMBIA	PA	39	RURAL	0.8730	14100	URBAN	0.9382	7.47
FRANKLIN	PA	39	RURAL	0.8730	16540	URBAN	1.0997	25.97

TABLE 10—CY 2015 PROPOSED RURAL TO URBAN CBSA CROSSWALK—Continued

County name	State	ESRD PPS CY 2014 CBSA delineations			Proposed ESRD PPS CY 2015 CBSA delineations			Change in value (percent)
		CBSA	Urban/Rural	Wage index value	CBSA	Urban/Rural	Wage index value	
MONROE	PA	39	RURAL	0.8730	20700	URBAN	0.9406	7.74
MONTOUR	PA	39	RURAL	0.8730	14100	URBAN	0.9382	7.47
UTUADO	PR	40	RURAL	0.4000	10380	URBAN	0.4000	0.00
BEAUFORT	SC	42	RURAL	0.8381	25940	URBAN	0.8807	5.08
CHESTER	SC	42	RURAL	0.8381	16740	URBAN	0.9123	8.85
JASPER	SC	42	RURAL	0.8381	25940	URBAN	0.8807	5.08
LANCASTER	SC	42	RURAL	0.8381	16740	URBAN	0.9123	8.85
UNION	SC	42	RURAL	0.8381	43900	URBAN	0.8275	−1.26
CUSTER	SD	43	RURAL	0.8343	39660	URBAN	0.9075	8.77
CAMPBELL	TN	44	RURAL	0.7387	28940	URBAN	0.7039	−4.71
CROCKETT	TN	44	RURAL	0.7387	27180	URBAN	0.7775	5.25
MAURY	TN	44	RURAL	0.7387	34980	URBAN	0.9053	22.55
MORGAN	TN	44	RURAL	0.7387	28940	URBAN	0.7039	−4.71
ROANE	TN	44	RURAL	0.7387	28940	URBAN	0.7039	−4.71
FALLS	TX	45	RURAL	0.7917	47380	URBAN	0.8202	3.60
HOOD	TX	45	RURAL	0.7917	23104	URBAN	0.9412	18.88
HUDSPETH	TX	45	RURAL	0.7917	21340	URBAN	0.8356	5.55
LYNN	TX	45	RURAL	0.7917	31180	URBAN	0.8870	12.04
MARTIN	TX	45	RURAL	0.7917	33260	URBAN	0.8973	13.34
NEWTON	TX	45	RURAL	0.7917	13140	URBAN	0.8541	7.88
OLDHAM	TX	45	RURAL	0.7917	11100	URBAN	0.8308	4.94
SOMERVELL	TX	45	RURAL	0.7917	23104	URBAN	0.9412	18.88
BOX ELDER	UT	46	RURAL	0.8877	36260	URBAN	0.9259	4.30
AUGUSTA	VA	49	RURAL	0.7694	44420	URBAN	0.8357	8.62
BUCKINGHAM	VA	49	RURAL	0.7694	16820	URBAN	0.9087	18.11
CULPEPER	VA	49	RURAL	0.7694	47894	URBAN	1.0418	35.40
FLOYD	VA	49	RURAL	0.7694	13980	URBAN	0.8504	10.53
RAPPAHANNOCK	VA	49	RURAL	0.7694	47894	URBAN	1.0418	35.40
STAUNTON CITY	VA	49	RURAL	0.7694	44420	URBAN	0.8357	8.62
WAYNESBORO CITY	VA	49	RURAL	0.7694	44420	URBAN	0.8357	8.62
COLUMBIA	WA	50	RURAL	1.0932	47460	URBAN	1.0974	0.38
PEND OREILLE	WA	50	RURAL	1.0932	44060	URBAN	1.1467	4.89
STEVENS	WA	50	RURAL	1.0932	44060	URBAN	1.1467	4.89
WALLA WALLA	WA	50	RURAL	1.0932	47460	URBAN	1.0974	0.38
FAYETTE	WV	51	RURAL	0.7391	13220	URBAN	0.8037	8.74
RALEIGH	WV	51	RURAL	0.7391	13220	URBAN	0.8037	8.74
GREEN	WI	52	RURAL	0.9074	31540	URBAN	1.1190	23.32

The wage index values of rural areas are typically lower than that of urban areas. Therefore, ESRD facilities located in a county that is currently designated as urban under the ESRD PPS wage index that would become rural if we adopt the new CBSA delineations may experience a decrease in their wage index values. We have identified 39 counties and 29 ESRD facilities that would move from urban to rural status if we adopt the new CBSA delineations beginning in CY 2015. Table 11: (CY 2015 Proposed Urban to Rural CBSA Crosswalk) shows the CBSA delineations for CY 2014 and the proposed urban wage index values for CY 2015 based on those delineations, compared with the proposed CBSA delineations and wage index values for CY 2015 based on those delineations, and the percentage change in these values for those counties that would change from urban to rural if we adopt the new CBSA delineations. If we adopted the new CBSA delineations illustrated in Table 11 below, approximately 30 facilities would experience a decrease in their wage index values.

TABLE 11—CY 2015 PROPOSED URBAN TO RURAL CBSA CROSSWALK

County name	State	ESRD PPS CY 2014 CBSA delineations			Proposed ESRD PPS CY 2015 CBSA delineations			Change in value (%)
		CBSA	Urban/Rural	Wage index value	CBSA	Urban/Rural	Wage index value	
GREENE	AL	46220	URBAN	0.8336	01	RURAL	0.6930	−16.9
FRANKLIN	AR	22900	URBAN	0.7593	04	RURAL	0.7265	−4.3
POWER	ID	38540	URBAN	0.9707	13	RURAL	0.7425	−23.5
FRANKLIN	IN	17140	URBAN	0.8942	15	RURAL	0.8454	−5.5
GIBSON	IN	21780	URBAN	0.8524	15	RURAL	0.8454	−0.8
GREENE	IN	14020	URBAN	0.9096	15	RURAL	0.8454	−7.1
TIPTON	IN	29020	URBAN	0.9023	15	RURAL	0.8454	−6.3

TABLE 11—CY 2015 PROPOSED URBAN TO RURAL CBSA CROSSWALK—Continued

County name	State	ESRD PPS CY 2014 CBSA Delineations			Proposed ESRD PPS CY 2015 CBSA delineations			Change in value (%)
		CBSA	Urban/Rural	Wage index value	CBSA	Urban/Rural	Wage index value	
FRANKLIN	KS	28140	URBAN	0.9454	17	RURAL	0.7811	−17.4
GEARY	KS	31740	URBAN	0.7225	17	RURAL	0.7811	8.1
NELSON	KY	31140	URBAN	0.8313	18	RURAL	0.7774	−6.5
WEBSTER	KY	21780	URBAN	0.8524	18	RURAL	0.7774	−8.8
FRANKLIN	MA	44140	URBAN	1.0309	22	RURAL	1.1596	12.5
IONIA	MI	24340	URBAN	0.8998	23	RURAL	0.8313	−7.6
NEWAYGO	MI	24340	URBAN	0.8998	23	RURAL	0.8313	−7.6
GEORGE	MS	37700	URBAN	0.7423	25	RURAL	0.7584	2.2
STONE	MS	25060	URBAN	0.8209	25	RURAL	0.7584	−7.6
CRAWFORD	MO	41180	URBAN	0.9457	26	RURAL	0.7827	−17.2
HOWARD	MO	17860	URBAN	0.8349	26	RURAL	0.7827	−6.3
WASHINGTON	MO	41180	URBAN	0.9457	26	RURAL	0.7827	−17.2
ANSON	NC	16740	URBAN	0.9283	34	RURAL	0.7880	−15.1
GREENE	NC	24780	URBAN	0.9405	34	RURAL	0.7880	−16.2
ERIE	OH	41780	URBAN	0.7792	36	RURAL	0.8338	7.0
OTTAWA	OH	45780	URBAN	0.9152	36	RURAL	0.8338	−8.9
PREBLE	OH	19380	URBAN	0.8918	36	RURAL	0.8338	−6.5
WASHINGTON	OH	37620	URBAN	0.8167	36	RURAL	0.8338	2.1
STEWART	TN	17300	URBAN	0.7554	44	RURAL	0.7297	−3.4
CALHOUN	TX	47020	URBAN	0.8504	45	RURAL	0.7909	−7.0
DELTA	TX	19124	URBAN	0.9751	45	RURAL	0.7909	−18.9
SAN JACINTO	TX	26420	URBAN	0.9881	45	RURAL	0.7909	−20.0
SUMMIT	UT	41620	URBAN	0.9548	46	RURAL	0.8993	−5.8
CUMBERLAND	VA	40060	URBAN	0.9556	49	RURAL	0.7573	−20.8
DANVILLE CITY	VA	19260	URBAN	0.7985	49	RURAL	0.7573	−5.2
KING AND QUEEN	VA	40060	URBAN	0.9556	49	RURAL	0.7573	−20.8
LOUISA	VA	40060	URBAN	0.9556	49	RURAL	0.7573	−20.8
PITTSYLVANIA	VA	19260	URBAN	0.7985	49	RURAL	0.7573	−5.2
SURRY	VA	47260	URBAN	0.9156	49	RURAL	0.7573	−17.3
MORGAN	WV	25180	URBAN	0.9113	51	RURAL	0.7249	−20.5
PLEASANTS	WV	37620	URBAN	0.8167	51	RURAL	0.7249	−11.2

We note that facilities in some urban CBSAs could experience a change in their wage index values even though they remain urban because an urban CBSA's boundaries and/or the counties included in that CBSA could change. Table 12 (CY 2015 Proposed Urban to a Different Urban CBSA Crosswalk) shows the CBSA delineations for CY 2014 and urban wage index values for CY 2015 based on those delineations, compared with the proposed CBSA delineations and urban wage index values for CY 2015 based on those delineations, and the percentage change in these values for counties that would remain urban even though the CBSA boundaries and/or counties included in that CBSA would change.

TABLE 12—CY 2015 PROPOSED URBAN TO A DIFFERENT URBAN CBSA CROSSWALK

County name	State	ESRD PPS CY 2014 CBSA delineations			Proposed ESRD PPS CY 2015 CBSA delineations			Change In value (%)
		CBSA	Urban/Rural	Wage index value	CBSA	Urban/Rural	Wage index value	
MARIN	CA	41884	URBAN	1.7049	42034	URBAN	1.7317	1.6
FLAGLER	FL	37380	URBAN	0.8494	19660	URBAN	0.8407	−1.0
DE KALB	IL	16974	URBAN	1.0368	20994	URBAN	1.0347	−0.2
KANE	IL	16974	URBAN	1.0368	20994	URBAN	1.0347	−0.2
MADISON	IN	11300	URBAN	1.0115	26900	URBAN	1.0170	0.5
MEADE	KY	31140	URBAN	0.8313	21060	URBAN	0.7650	−8.0
ESSEX	MA	37764	URBAN	1.0808	15764	URBAN	1.1196	3.6
OTTAWA	MI	26100	URBAN	0.8167	24340	URBAN	0.8832	8.1
JACKSON	MS	37700	URBAN	0.7423	25060	URBAN	0.7927	6.8
BERGEN	NJ	35644	URBAN	1.3136	35614	URBAN	1.2887	−1.9
HUDSON	NJ	35644	URBAN	1.3136	35614	URBAN	1.2887	−1.9
MIDDLESEX	NJ	20764	URBAN	1.1085	35614	URBAN	1.2887	16.3
MONMOUTH	NJ	20764	URBAN	1.1085	35614	URBAN	1.2887	16.3
OCEAN	NJ	20764	URBAN	1.1085	35614	URBAN	1.2887	16.3
PASSAIC	NJ	35644	URBAN	1.3136	35614	URBAN	1.2887	−1.9
SOMERSET	NJ	20764	URBAN	1.1085	35084	URBAN	1.1520	3.9

TABLE 12—CY 2015 PROPOSED URBAN TO A DIFFERENT URBAN CBSA CROSSWALK—Continued

County name	State	ESRD PPS CY 2014 CBSA delineations			Proposed ESRD PPS CY 2015 CBSA delineations			Change In value (%)
		CBSA	Urban/Rural	Wage index value	CBSA	Urban/Rural	Wage index value	
BRONX	NY	35644	URBAN	1.3136	35614	URBAN	1.2887	−1.9
DUTCHESS	NY	39100	URBAN	1.1576	20524	URBAN	1.1387	−1.6
KINGS	NY	35644	URBAN	1.3136	35614	URBAN	1.2887	−1.9
NEW YORK	NY	35644	URBAN	1.3136	35614	URBAN	1.2887	−1.9
ORANGE	NY	39100	URBAN	1.1576	35614	URBAN	1.2887	11.3
PUTNAM	NY	35644	URBAN	1.3136	20524	URBAN	1.1387	−13.3
QUEENS	NY	35644	URBAN	1.3136	35614	URBAN	1.2887	−1.9
RICHMOND	NY	35644	URBAN	1.3136	35614	URBAN	1.2887	−1.9
ROCKLAND	NY	35644	URBAN	1.3136	35614	URBAN	1.2887	−1.9
WESTCHESTER	NY	35644	URBAN	1.3136	35614	URBAN	1.2887	−1.9
BRUNSWICK	NC	48900	URBAN	0.8899	34820	URBAN	0.8641	−2.9
BUCKS	PA	37964	URBAN	1.0934	33874	URBAN	1.0236	−6.4
CHESTER	PA	37964	URBAN	1.0934	33874	URBAN	1.0236	−6.4
MONTGOMERY	PA	37964	URBAN	1.0934	33874	URBAN	1.0236	−6.4
ARECIBO	PR	41980	URBAN	0.4471	11640	URBAN	0.4229	−5.4
CAMUY	PR	41980	URBAN	0.4471	11640	URBAN	0.4229	−5.4
CEIBA	PR	21940	URBAN	0.4000	41980	URBAN	0.4460	11.5
FAJARDO	PR	21940	URBAN	0.4000	41980	URBAN	0.4460	11.5
GUANICA	PR	49500	URBAN	0.4000	38660	URBAN	0.4169	4.2
GUAYANILLA	PR	49500	URBAN	0.4000	38660	URBAN	0.4169	4.2
HATILLO	PR	41980	URBAN	0.4471	11640	URBAN	0.4229	−5.4
LUQUILLO	PR	21940	URBAN	0.4000	41980	URBAN	0.4460	11.5
PENUELAS	PR	49500	URBAN	0.4000	38660	URBAN	0.4169	4.2
QUEBRADILLAS	PR	41980	URBAN	0.4471	11640	URBAN	0.4229	−5.4
YAUCO	PR	49500	URBAN	0.4000	38660	URBAN	0.4169	4.2
ANDERSON	SC	11340	URBAN	0.8775	24860	URBAN	0.9025	2.8
GRAINGER	TN	34100	URBAN	0.7002	28940	URBAN	0.7039	0.5
LINCOLN	WV	16620	URBAN	0.8017	26580	URBAN	0.8773	9.4
PUTNAM	WV	16620	URBAN	0.8017	26580	URBAN	0.8773	9.4

Likewise, ESRD facilities currently located in a rural area may remain rural under the new CBSA delineations but experience a change in their rural wage index value due to implementation of the new CBSA delineations. Table 13 (CY 2015 Proposed Changes to the Statewide Rural Wage Index Crosswalk) shows the CBSA numbers for CY 2014 and the proposed rural statewide wage index values for CY 2015, compared with the proposed statewide rural wage index values for CY 2015, and the percentage change in these values.

TABLE 13—CY 2015 PROPOSED CHANGES TO THE STATEWIDE RURAL WAGE INDEX CROSSWALK

State	ESRD PPS CY 2014 CBSA delineations			Proposed ESRD PPS CY 2015 CBSA delineations			Change in value (%)
	CBSA	Urban/Rural	Wage index value	CBSA	Urban/Rural	Wage index value	
AL	01	RURAL	0.6981	01	RURAL	0.6930	−0.73
AZ	03	RURAL	0.9159	03	RURAL	0.9253	1.03
CT	07	RURAL	1.1292	07	RURAL	1.1337	0.40
FL	10	RURAL	0.8010	10	RURAL	0.8394	4.79
GA	11	RURAL	0.7425	11	RURAL	0.7439	0.19
HI	12	RURAL	0.9953	12	RURAL	1.0276	3.25
IL	14	RURAL	0.8363	14	RURAL	0.8365	0.02
KS	17	RURAL	0.7838	17	RURAL	0.7811	−0.34
KY	18	RURAL	0.7770	18	RURAL	0.7774	0.05
LA	19	RURAL	0.7608	19	RURAL	0.7135	−6.22
MD	21	RURAL	0.8586	21	RURAL	0.8778	2.24
MA	22	RURAL	1.3971	22	RURAL	1.1596	−17.00
MI	23	RURAL	0.8232	23	RURAL	0.8313	0.98
MS	25	RURAL	0.7603	25	RURAL	0.7584	−0.25
NE	28	RURAL	0.8957	28	RURAL	0.8909	−0.54
NY	33	RURAL	0.8226	33	RURAL	0.8208	−0.22
NC	34	RURAL	0.7963	34	RURAL	0.7880	−1.04
OH	36	RURAL	0.8315	36	RURAL	0.8338	0.28
OR	38	RURAL	1.0120	38	RURAL	0.9985	−1.33
PA	39	RURAL	0.8730	39	RURAL	0.8079	−7.46

TABLE 13—CY 2015 PROPOSED CHANGES TO THE STATEWIDE RURAL WAGE INDEX CROSSWALK—Continued

State	ESRD PPS CY 2014 CBSA delineations			Proposed ESRD PPS CY 2015 CBSA delineations			Change in value (%)
	CBSA	Urban/Rural	Wage index value	CBSA	Urban/Rural	Wage index value	
SC	42	RURAL	0.8381	42	RURAL	0.8357	−0.29
TN	44	RURAL	0.7387	44	RURAL	0.7297	−1.22
TX	45	RURAL	0.7917	45	RURAL	0.7909	−0.10
UT	46	RURAL	0.8877	46	RURAL	0.8993	1.31
VA	49	RURAL	0.7694	49	RURAL	0.7573	−1.57
WA	50	RURAL	1.0932	50	RURAL	1.0917	−0.14
WV	51	RURAL	0.7391	51	RURAL	0.7249	−1.92
WI	52	RURAL	0.9074	52	RURAL	0.9120	0.51

While we believe that the new CBSA delineations would result in wage index values that are more representative of the actual costs of labor in a given area, we also recognize that use of the new CBSA delineations would result in reduced payments to some facilities. In particular, approximately 30 facilities would experience reduced payments if we adopt the new CBSA delineations. At the same time, use of the new CBSA delineations would result in increased payments for approximately 100 facilities, while the majority of facilities would experience no change in payments due to the implementation of the new CBSA delineations. We are proposing to implement the new CBSA delineations using a 2-year transition with a 50/50 blended wage index value for all facilities in CY 2015 and 100% of the wage index based on the new CBSA delineations in CY 2016.

c. Transition Period

We considered having no transition period and fully implementing the proposed new CBSA delineations beginning in CY 2015, which would mean that all facilities would have payments based on the new delineations starting on January 1, 2015. However, because more facilities would have increased rather than decreased payments beginning in CY 2015, and because the overall amount of ESRD payments would increase slightly due to the new CBSA delineations, the wage index budget neutrality factor would be higher. This higher factor would reduce the ESRD PPS per treatment base rate for all facilities paid under the ESRD PPS, despite the fact that the majority of ESRD facilities are unaffected by the new CBSA delineations. Thus, we believe that it would be appropriate to provide for a transition period to mitigate any resulting short-term instability of a lower ESRD PPS base rate as well as any negative impacts to facilities that experience reduced payments. In addition, we note that for CY 2015, section 1881(b)(14)(F)(i)(III), as added by section 217 of PAMA, requires a 0.0 payment update (for further discussion on this update please see section II.B.1.a.ii of this rule), and thus, there is no possibility of offsetting any reduction, even a slight reduction, to the ESRD PPS base rate in CY 2015.

Therefore, we are proposing a two-year transition blended wage index for all facilities. Facilities would receive 50 percent of their CY 2015 wage index value based on the CBSA delineations for CY 2014 and 50 percent of their CY 2015 wage index value based on the proposed new CBSA delineations. This results in an average of the two values. We propose that facilities' CY 2016 wage index values would be based 100 percent on the new CBSA delineations. We believe a two-year transition strikes an appropriate balance between ensuring that ESRD PPS payments are as accurate and stable as possible while giving facilities time to adjust to the new CBSA delineations.

In the CY 2011 ESRD PPS final rule (75 FR 49117), we finalized a policy to use the labor-related share of 41.737 percent for the ESRD PPS. For the CY 2015 ESRD PPS, we propose to use a labor-related share of 50.673 percent, which we propose to transition over a 2-year period with the labor-related share in CY 2015 based 50 percent on the old labor-related share and 50 percent on the new labor-related share, and the labor-related share in CY 2016 based 100 percent on the new labor-related share. For a complete discussion of the proposed changes in the CY 2015 ESRD PPS market basket and labor-related share, as well as the transition of the labor-related share; please see sections II.B.2.e and XII.B.1.a of this proposed rule.

4. Proposed Revisions to the Outlier Policy

Section 1881(b)(14)(D)(ii) of the Act requires that the ESRD PPS include a payment adjustment for high cost outliers due to unusual variations in the type or amount of medically necessary care, including variability in the amount of erythropoiesis stimulating agents (ESAs) necessary for anemia management. Our regulations at 42 CFR 413.237(a)(1) provide that ESRD outlier services are the following items and services that are included in the ESRD PPS bundle: (i) ESRD-related drugs and biologicals that were or would have been, prior to January 1, 2011, separately billable under Medicare Part B; (ii) ESRD-related laboratory tests that were or would have been, prior to January 1, 2011, separately billable under Medicare Part B; (iii) medical/surgical supplies, including syringes, used to administer ESRD-related drugs, that were or would have been, prior to January 1, 2011, separately billable under Medicare Part B; and (iv) renal dialysis service drugs that were or would have been, prior to January 1, 2011, covered under Medicare Part D, excluding ESRD-related oral-only drugs.

In the CY 2011 ESRD PPS final rule (75 FR 49142), we stated that for purposes of determining whether an ESRD facility would be eligible for an outlier payment, it would be necessary for the facility to identify the actual ESRD outlier services furnished to the patient by line item on the monthly claim. The ESRD-related drugs, laboratory tests, and medical/surgical supplies that we would recognize as outlier services were specified in Attachment 3 of Change Request 7064, Transmittal 2033 issued August 20, 2010, rescinded and replaced by Transmittal 2094, dated November 17, 2010. With respect to the outlier policy, Transmittal 2094 identified additional drugs and laboratory tests that may be eligible for ESRD outlier payment.

Transmittal 2094 was rescinded and replaced by Transmittal 2134, dated January 14, 2011, which was issued to correct the subject on the Transmittal page and made no other changes.

In the CY 2012 ESRD PPS final rule (76 FR 70246), we eliminated the issuance of a specific list of eligible outlier service drugs which were or would have been separately billable under Medicare Part B prior to January 1, 2011. However, we use separate guidance to continue to identify renal dialysis service drugs which were or would have been covered under Part D for outlier eligibility purposes in order to provide unit prices for calculating imputed outlier services. We also can identify, through our monitoring efforts, items and services that are incorrectly being identified as eligible outlier services in the claims data. Information about these items and services and any updates to the list of renal dialysis items and services that qualify as outlier services are made through administrative issuances, if necessary.

Our regulations at 42 CFR 413.237 specify the methodology used to calculate outlier payments. An ESRD facility is eligible for an outlier payment if its actual or imputed Medicare Allowable Payment (MAP) amount per treatment for ESRD outlier services exceeds a threshold. The MAP amount represents the average incurred amount per treatment for services that were or would have been considered separately billable services prior to January 1, 2011. The threshold is equal to the ESRD facility's predicted ESRD outlier services MAP amount per treatment (which is case-mix adjusted) plus the fixed dollar loss amount. In accordance with § 413.237(c) of the regulations, facilities are paid 80 percent of the per treatment amount by which the imputed MAP amount for outlier services (that is, the actual incurred amount) exceeds this threshold. ESRD facilities are eligible to receive outlier payments for treating both adult and pediatric dialysis patients.

In the CY 2011 ESRD PPS final rule, using 2007 data, we established the outlier percentage at 1.0 percent of total payments (75 FR 49142 through 49143). We also established the fixed dollar loss amounts that are added to the predicted outlier services MAP amounts. The outlier services MAP amounts and fixed dollar loss amounts are different for adult and pediatric patients due to differences in the utilization of separately billable services among adult and pediatric patients (75 FR 49140).

As we explained in the CY 2011 ESRD PPS final rule (75 FR 49138 and 49139), the predicted outlier services MAP amounts for a patient are determined by multiplying the adjusted average outlier services MAP amount by the product of the patient-specific case-mix adjusters applicable using the outlier services payment multipliers developed from the regression analysis to compute the payment adjustments. For CY 2014, the outlier services MAP amounts and fixed dollar loss amounts were based on 2012 data (78FR 72180). Therefore, the outlier thresholds for CY 2014 were based on utilization of ESRD-related items and services furnished under the ESRD PPS. Because of the utilization of epoetin and other outlier services has continued to decline under the ESRD PPS, we lowered the MAP amounts and fixed dollar loss amounts for CYs 2013 and 2014 to allow for an increase in payments for ESRD beneficiaries requiring higher resources.

a. Proposed Changes to the Outlier Services MAP Amounts and Fixed Dollar Loss Amounts

For CY 2015, we are not proposing any changes to the methodology used to compute the MAP or fixed dollar loss amounts. Rather, in this proposed rule, we are updating the outlier services MAP amounts and fixed dollar loss amounts to reflect the utilization of outlier services reported on the 2013 claims using the December 2013 claims file. The impact of this update is shown in Table 14, which compares the outlier services MAP amounts and fixed dollar loss amounts used for the outlier policy in CY 2014 with the updated estimates for this proposed rule. The estimates for the proposed outlier CY 2015 outlier policy, which are included in Column II of Table 14, were inflation-adjusted to reflect projected 2015 prices for outlier services.

TABLE 14—OUTLIERPOLICY: IMPACT OF USING UPDATED DATA TO DEFINE THE OUTLIER POLICY

	Column I Final outlier policy for CY 2014 (based on 2012 data price inflated to 2014) *		*Column II* Proposed outlier policy for CY 2015 (based on 2013 data price inflated to 2015) *	
	Age <18	Age >=18	Age <18	Age >=18
Average outlier services MAP amount per treatment [1]	$37.29	$51.97	$40.05	$52.61
Adjustments.				
Standardization for outlier services [2]	1.1079	0.9866	1.1182	0.9899
MIPPA reduction	0.98	0.98	0.98	0.98
Adjusted average outlier services MAP amount [3]	$40.49	$50.25	$43.89	$51.04
Fixed dollar loss amount that is added to the predicted MAP to determine the outlier threshold [4]	$54.01	$98.67	$56.30	$85.24
Patient months qualifying for outlier payment	6.7%	5.3%	6.2%	6.3%

* The outlier services MAP amounts and fixed dollar loss amounts were inflation adjusted to reflect updated prices for outlier services (that is, 2014 prices in Column I and projected 2015 prices in Column II).

[1] Excludes patients for whom not all data were available to calculate projected payments. The outlier services MAP amounts are based on 2013 data. The medically unbelievable edits of 400,000 units for EPO and 1,200 mcg for Aranesp that are in place under the ESA claims monitoring policy were applied.

[2] Applied to the average outlier MAP per treatment. Standardization for outlier services is based on existing case mix adjusters for adult and pediatric patient groups.

[3] This is the amount to which the separately billable (SB) payment multipliers are applied to calculate the predicted outlier services MAP for each patient.

[4] The fixed dollar loss amounts were calculated using 2013 data to yield total outlier payments that represent 1% of total projected payments for the ESRD PPS.

As seen in Table 14, the estimated fixed dollar loss amount that determines the CY 2015 outlier threshold amount for adults (Column II) is lower than that used for the CY 2014 outlier policy (Column I). The threshold is lower in

spite of the fact that the average outlier services MAP per treatment has increased. Between 2012 and 2013, the variation in outlier services across patients declined among adults. The net result is an increase in the percentage of patient-months qualifying for outlier payment (6.3 percent based on 2013 data versus 5.3 percent based on 2012 data) but a decrease in the average outlier payment per case. The estimated fixed dollar loss amount that determines the CY 2015 outlier threshold amount for pediatric patients (Column II) is higher than that used for the CY 2014 outlier policy (Column I).

For pediatric patients, there was an increase in the overall average outlier service MAP amount between 2012 ($37.29 per treatment as shown in Column I) and 2013 ($40.05 per treatment, as shown in Column II). In addition, there was a continuing tendency in 2013 for a relatively small percentage of pediatric patients to account for a disproportionate share of the total outlier service MAP amounts. The one percent target for outlier payments is therefore expected to be achieved based on a smaller percentage of pediatric outlier cases using 2013 data compared to 2012 data (6.2 percent of pediatric patient months are expected to qualify for outlier payments rather than 6.7 percent). These patterns led to the estimated fixed dollar loss amount for pediatric patients being higher for the outlier policy for CY 2015 compared to the outlier policy for CY 2014. Generally, there is a relatively higher likelihood for pediatric patients that the outlier threshold may be adjusted to reflect changes in the distribution of outlier service MAP amounts. This is due to the much smaller overall number of pediatric patients compared to adult patients, and therefore to the fact that the outlier threshold for pediatric patients is calculated based on data for a much smaller number of pediatric patients compared to adult patients.

We propose to update the fixed dollar loss amounts that are added to the predicted MAP amounts per treatment to determine the outlier thresholds for CY 2015 from $98.67 to $85.24 for adult patients and from $54.01 to $56.30 for pediatric patients compared with CY 2014 amounts. We estimate that the percentage of patient months qualifying for outlier payments under the current policy will be 6.3 percent and 6.2 percent for adult and pediatric patients, respectively, based on the 2013 data. The pediatric outlier MAP and fixed dollar loss amounts continue to be lower for pediatric patients than adults due to the continued lower use of outlier services (primarily reflecting lower use of epoetin and other injectable drugs).

b. Outlier Policy Percentage

42 CFR 413.220(b)(4) stipulates that the per treatment base rate is reduced by 1 percent to account for the proportion of the estimated total payments under the ESRD PPS that are outlier payments. Based on the 2013 claims, outlier payments represented approximately 0.5 percent of total payments, again falling short of the 1 percent target due to further declines in the use of outlier services. Use of 2013 data to recalibrate the thresholds, which reflect lower utilization of EPO and other outlier services and reduced variation in outlier services among adults, is expected to result in aggregate outlier payments close to the 1 percent target in CY 2015. We believe the proposed update to the outlier MAP and fixed dollar loss amounts for CY 2015 will increase payments for ESRD beneficiaries requiring higher resource utilization and come closer to meeting our 1 percent outlier policy.

We note that recalibration of the fixed dollar loss amounts in this proposed rule for CY 2015 outlier payments results in no change in payments to ESRD facilities for beneficiaries with renal dialysis items and services that are not eligible for outlier payments, but increases payments to providers for beneficiaries with renal dialysis items and services that are eligible for outlier payments. Therefore, beneficiary co-insurance obligations would also increase for renal dialysis services eligible for outlier payments.

C. Restatement of Policy Regarding Reporting and Payment for More Than Three Dialysis Treatments per Week

1. Reporting More Than Three Dialysis Treatments per Week on Claims

Since the composite payment system was implemented in the 1980s, CMS has reimbursed ESRD facilities based upon three hemodialysis treatments per week and allowed for the payment of additional weekly dialysis treatments with medical justification. When a dialysis modality regimen requires more than three weekly dialysis treatments, such as with short, frequent hemodialysis (HD) and peritoneal dialysis (PD) modalities, we apply payment edits to ensure that Medicare payment on the monthly claim is consistent with the three times-weekly dialysis treatment payment limit, which translates to payment for 13 treatments for a 30-day month and 14 treatments for a 31-day month.

Under section 1881(b)(14)(C) of the Act, the ESRD PPS may provide for payment on the basis of renal dialysis services furnished during a week, or month, or such other appropriate unit of payment as the Secretary specifies. In the CY 2011 ESRD PPS final rule (75 FR 49064), CMS finalized the per treatment basis of payment in which ESRD facilities are paid for up to three treatments per week, unless there is medical justification for more than three treatments per week. We codified the per-treatment unit of payment under the ESRD PPS at 42 CFR 413.215(a). Also in the CY 2011 ESRD PPS final rule (75 FR 49078), we explained how we converted patient weeks to HD-equivalent sessions for PD patients. Specifically, we noted that one week of PD was considered equivalent to three HD treatments. For example, a patient on PD for 21 days would have (21/7) x 3 or 9 HD-equivalent sessions. Our policy is that ESRD facilities treating patients on PD or home HD will be paid for up to three HD-equivalent sessions for each week of dialysis, unless there is medical justification for furnishing additional treatments.

Increasingly, some ESRD facilities have begun to offer dialysis modalities where the standard treatment regimen is more than three treatments per week. Also, we have observed a payment variance among Medicare Administrative Contractors (MACs) in processing claims for dialysis treatments for modalities that require more frequent dialysis, resulting in payment of more than 14 treatments per month without medical justification. Lastly, CMS has received several requests for clarification regarding Medicare payment and billing policies for dialysis treatments for modalities requiring more than three treatments per week that are furnished in-facility or in the patient's home. Specifically, ESRD facilities, renal physician groups, and MACs have requested billing guidance regarding whether all of the dialysis treatments furnished to the patient during the billing month should be reported on the claim form, even though the Medicare benefit only provides for payment of three dialysis treatments per week.

For these reasons, we are reiterating our policy with respect to payment for more than three dialysis treatments per week. We note that we are not changing our policy for reporting extra non-medically necessary dialysis sessions. ESRD facility claims should continue to include all dialysis treatments furnished during the month on claims, but payment is limited to three dialysis treatments per week through the payment edits of 13 treatments for a 30-

day month or 14 treatments for a 31-day month. For example, an ESRD facility that furnishes dialysis services to patients who dialyze using modalities requiring shorter, more frequent dialysis (for example, a dialysis regimen of 4, 5, 6 or 7 days a week in-facility or at home), should report all of the patient's dialysis treatments on the monthly claim. However, payment for these services will reflect existing claims processing system edits, and the monthly Medicare payment would mirror the Medicare ESRD benefit of three dialysis treatments per week.

2. Medical Necessity for More Than Three Treatments per Week

Under the ESRD benefit, we have always recognized that some patient conditions benefit from more than three dialysis sessions per week and as such, the Medicare policy for medically necessary additional dialysis treatments was developed. Under this policy, the MACs determine whether additional treatments furnished during a month are medically necessary. While Medicare does not define specific patient conditions that meet the requirements of medical necessity, we do furnish instructions to MACs to consider appropriate patient conditions that would result in a patient's medical need for additional dialysis treatments (for example, excess fluid of five or more pounds). When such patient conditions are indicated with the claim requesting payment, we instruct MACs to consider medical justification and the appropriateness of payment for the additional sessions.

In section 50.A of the Medicare Benefit Policy Manual (Pub. 100–02), we explained our policy regarding payment for hemodialysis-equivalent PD and payment for more than three dialysis treatments per week under the ESRD PPS. We restated that ESRD facilities are paid for a maximum of 13 treatments during a 30 day month and 14 treatments during a 31-day month unless there is medical justification for additional treatments. The only time facilities should seek payment for additional dialysis sessions, including payment for shorter, more frequent modalities, is when the patient has a medical need for additional dialysis and the facility has furnished supporting medical justification for the extra treatments. Modality choice does not constitute medical justification.

D. Delay of Payment for Oral-Only Drugs Under the ESRD PPS

As we discussed in the CY 2014 ESRD PPS final rule (78 FR 72185 through 72186), section 1881(b)(14)(A)(i) of the Act, as added by section 153(b) of the Medicare Improvements for Patients and Providers Act of 2008 (MIPPA), requires the Secretary to implement a payment system under which a single payment is made to a provider of services or a renal dialysis facility for ''renal dialysis services'' in lieu of any other payment. Section 1881(b)(14)(B) of the Act defines renal dialysis services, and subclause (iii) of that section states that these services include ''other drugs and biologicals that are furnished to individuals for the treatment of ESRD and for which payment was (before the application of this paragraph) made separately under this title, and any oral equivalent form of such drug or biological[.]''

We interpreted this provision as including not only injectable drugs and biologicals used for the treatment of ESRD (other than ESAs, which are included under clause (ii) of section 1881(b)(14)(B)), but also all non-injectable oral drugs used for the treatment of ESRD furnished under title XVIII of the Act. We also concluded that, to the extent ESRD-related oral-only drugs do not fall within clause (iii) of the statutory definition of renal dialysis services, such drugs would fall under clause (iv), and constitute other items and services used for the treatment of ESRD that are not described in clause (i) of section 1881(b)(14)(B). As such, CMS finalized and promulgated the payment policies for oral-only drugs used for the treatment of ESRD in the CY 2011 ESRD PPS final rule (75 FR 49038 through 49053), and we defined ''renal dialysis services'' at 42 CFR 413.171(3) as including, among other things ''other drugs and biologicals that are furnished to individuals for the treatment of ESRD and for which payment was (prior to January 1, 2011) made separately under Title XVIII of the Act (including drugs and biologicals with only an oral form).''

Although ESRD-related oral-only drugs are included in the definition of renal dialysis services, in the CY 2011 ESRD PPS final rule (75 FR 49044), we also finalized a policy to delay payment for these drugs under the PPS until January 1, 2014. We stated that there were certain advantages to delaying the implementation of payment for oral-only drugs, including allowing ESRD facilities additional time to make operational changes and logistical arrangements in order to furnish oral-only ESRD-related drugs and biologicals to their patients. Accordingly, 42 CFR 413.174(f)(6) provides that payment to an ESRD facility for renal dialysis service drugs and biologicals with only an oral form is incorporated into the PPS payment rates effective January 1, 2014.

On January 3, 2013, the Congress enacted ATRA. Section 632(b) of ATRA states that the Secretary ''may not implement the policy under section 413.176(f)(6) of title 42, Code of Federal Regulations (relating to oral-only ESRD-related drugs in the ESRD prospective payment system), prior to January 1, 2016.'' Accordingly, in the CY 2014 ESRD PPS final rule (78 FR 72185 through 72186), we delayed payment for ESRD-related oral-only drugs under the ESRD PPS until January 1, 2016, instead of on January 1, 2014, which is the original date we finalized for payment of ESRD-related oral-only drugs under the ESRD PPS. We implemented this delay by revising the effective date for providing payment for oral-only ESRD-related drugs under the ESRD PPS at 42 CFR 413.174(f)(6) from January 1, 2014 to January 1, 2016. In addition, we also changed the date when oral-only drugs would be eligible outlier services under the outlier policy described in 42 CFR 413.237(a)(1)(iv) from January 1, 2014 to January 1, 2016.

On April 1, 2014, PAMA was enacted. Section 217(a)(1) of PAMA amended section 632(b)(1) of ATRA, which now provides that the Secretary ''may not implement the policy under section 413.174(f)(6) of title 42, Code of Federal Regulations (relating to oral-only ESRD drugs in the ESRD prospective payment system), prior to January 1, 2024.'' Accordingly, payment for ESRD-related oral-only drugs will not be made under the ESRD PPS prior to January 1, 2024 instead of on January 1, 2016, which is the date we finalized for payment of ESRD-related oral-only drugs under the ESRD PPS in the CY 2014 ESRD PPS final rule (78 FR 72186).

We propose to implement this delay by modifying the effective date for providing payment for oral-only ESRD-related drugs and biologicals under the ESRD PPS at 42 CFR 413.174(f)(6) from January 1, 2016 to January 1, 2024. We also propose to change the date in 42 CFR 413.237(a)(1)(iv) regarding outlier payments for oral-only ESRD-related drugs made under the ESRD PPS from January 1, 2016 to January 1, 2024. We continue to believe that oral-only drugs used for the treatment of ESRD are an essential part of the ESRD PPS payment bundle and should be paid for under the ESRD PPS as soon as possible, or beginning January 1, 2024.

In addition to the delay of payment for oral-only ESRD-related drugs, section 217(a)(2) of PAMA further amends section 632(b)(1) of ATRA by adding a new sentence that provides,

''[n]otwithstanding section 1881(b)(14)(A)(ii) of the Social Security Act (42 U.S.C. 1395rr(b)(14)(A)(ii)), implementation of the policy described in the previous sentence shall be based on data from the most recent year available.'' We interpret this provision to mean that we are not to use per patient utilization data from 2007, 2008, or 2009 (whichever has the lowest per patient utilization) as we were required for the original ESRD PPS in implementing payment for oral-only ESRD drugs under the ESRD PPS. We will make proposals consistent with section 632(b)(1) of ATRA, as amended by section 217(a)(2) of PAMA, in future rulemaking.

Section 217(c) of PAMA requires the Secretary, as part of the CY 2016 ESRD PPS rulemaking, to establish a process for ''(1) determining when a product is no longer an oral-only drug; and (2) including new injectable and intravenous products into the bundled payment under such system.'' Consistent with this statutory requirement, we plan to propose a drug designation process in our CY 2016 rulemaking cycle and we are seeking industry and stakeholder comments on the components and elements of such a process for our consideration next year.

E. ESRD Drug Categories Included in the ESRD PPS Base Rate

In the CY 2011 ESRD PPS final rule (75 FR 49050), we finalized Table 4, (Renal Dialysis Service ESRD Drug Categories Included in the Final ESRD PPS Base Rate), and have included Table 15 below for the purpose of this discussion. In that rule, we noted that the categories of drugs and biologicals used for access management, anemia management, anti-infectives, bone and mineral metabolism and cellular management would always be considered ESRD-related drugs when furnished to an ESRD patient, and that payment for such drugs would be included in the ESRD PPS payment bundle. As such, beginning January 1, 2011, Medicare no longer makes a separate payment when a drug or biological (except for oral-only ESRD–related drugs for which we are proposing to delay payment under the ESRD PPS until January 1, 2024) identified in the categories listed in the following table is furnished to a Medicare ESRD beneficiary.

TABLE 15—RENAL DIALYSIS SERVICE ESRD DRUG CATEGORIES INCLUDED IN THE FINAL ESRD PPS BASE RATE

Drug category	Rationale for inclusion
Access Management	Drugs used to ensure access by removing clots from grafts, reverse anticoagulation if too much medication is given, and provide anesthetic for access placement.
Anemia Management	Drugs used to stimulate red blood cell production and/or treat or prevent anemia. This category includes ESAs as well as iron.
Anti-infectives	Vancomycin and daptomycin used to treat access site infections.
Bone and Mineral Metabolism	Drugs used to prevent/treat bone disease secondary to dialysis. This category includes phosphate binders and calcimimetics.
Cellular Management	Drugs used for deficiencies of naturally occurring substances needed for cellular management. This category includes levocarnitine.

In the CY 2011 ESRD PPS final rule (75 FR 49050), we noted that we included the anti-infective drugs of vancomycin and daptomycin because these drugs were routinely furnished for the ESRD-related conditions of access site infections and peritonitis. However, in the CY 2012 ESRD PPS final rule (76 FR 70242 through 70243), we responded to public comments that noted that vancomycin is a common anti-infective drug appropriate for treating infections that are both ESRD- and non-ESRD-related by modifying our policy to eliminate the payment restriction for vancomycin when it is furnished for non-ESRD related conditions. In addition, we finalized the use of CMS payment modifier AY (Item or service furnished to an End Stage Renal Disease (ESRD) patient that is not for the treatment of ESRD) and instructed facilities to append the modifier to the claim reporting vancomycin to indicate that the drug was furnished for reasons other than ESRD. The presence of the AY modifier on the claim allows the MAC to make a separate payment for the drug when it is furnished by the facility to a Medicare beneficiary for reasons other than ESRD.

In the CY 2013 ESRD PPS final rule (77 FR 67461), we further amended this policy to allow ESRD facilities to bill separately for daptomycin when it is furnished to ESRD beneficiaries for reasons other than ESRD. Once again, we instructed facilities to append claims reporting daptomycin furnished for reasons other than ESRD with the AY modifier so that MACs would be able to make a separate payment.

Because we have removed the payment limitation for both vancomycin and daptomycin, and because we believe that anti-infectives are a drug category that may be furnished for both ESRD- and non-ESRD-related reasons, we have updated the list of drug categories that are always considered ESRD-related under the ESRD PPS by removing the drug category for anti-infectives. We have included Table 16 (Renal Dialysis Service ESRD Drug Categories Included in the ESRD PPS Base Rate and Not Separately Payable) below to appropriately recognize the drug categories that are always considered ESRD-related and we confirm that the revised table reflects policy changes made in the CY 2012 and CY 2013 ESRD PPS rulemaking cycles and does not constitute new policy.

Over the past few years, we have received payment and billing inquiries requesting clarification for the payment for drugs represented by one of the drug categories included in the ESRD PPS, but not furnished for the treatment of ESRD. Therefore, we clarify that any drug included in the drug categories of access management, anemia management, bone and mineral metabolism and cellular management is not separately paid by Medicare regardless of why the drug is being furnished. In addition, the facility may not furnish a prescription for such drugs with the expectation that a Medicare Part D payment would be made, as the payment for the drug is included in the ESRD PPS payment bundle.

TABLE 16—RENAL DIALYSIS SERVICE ESRD DRUG CATEGORIES INCLUDED IN THE ESRD PPS BASE RATE AND NOT SEPARATELY PAYABLE

Drug category	Rationale for inclusion
Access Management	Drugs used to ensure access by removing clots from grafts, reverse anticoagulation if too much medication is given, and provide anesthetic for access placement.
Anemia Management	Drugs used to stimulate red blood cell production and/or treat or prevent anemia. This category includes ESAs as well as iron.
Bone and Mineral Metabolism	Drugs used to prevent/treat bone disease secondary to dialysis. This category includes phosphate binders and calcimimetics.
Cellular Management	Drugs used for deficiencies of naturally occurring substances needed for cellular management. This category includes levocarnitine.

The drug categories that may be separately paid by Medicare when furnished for non-ESRD patient conditions are included in Table 5 (ESRD Drug Categories Included in the ESRD PPS Base Rate But May be Used for Dialysis and non-Dialysis Purposes) (75 FR 49051). This table is included below for the purpose of this discussion. When any drug identified in the drug categories listed in Table 17 (antiemetic, anti-infectives, antipruritic, anxiolytic, excess fluid management, fluid and electrolyte management or pain management), is furnished for the treatment of ESRD, payment for the drug is included in the ESRD PPS payment and may not be paid separately. If a drug represented by a drug category in Table 17 is furnished for reasons other than ESRD, a separate Medicare payment is permitted when the AY modifier is indicated on the claim line reporting the drug for payment.

TABLE 17—ESRD DRUG CATEGORIES INCLUDED IN THE ESRD BASE RATE BUT MAY BE USED FOR DIALYSIS AND NON–DIALYSIS PURPOSES

Antiemetic	Used to prevent or treat nausea and vomiting secondary to dialysis. Excludes antiemetics used in conjunction with chemotherapy as these are covered under a separate benefit category.
Anti-infectives	Used to treat infections. May include antibacterial and antifungal drugs.
Antipruritic	Drugs in this classification have multiple clinical indications and are included for their action to treat itching secondary to dialysis.
Anxiolytic	Drugs in this classification have multiple actions but are included for the treatment of restless leg syndrome secondary to dialysis.
Excess Fluid Management	Drug/fluids used to treat fluid excess/overload.
Fluid and Electrolyte Management Including Volume Expanders.	Intravenous drugs/fluids used to treat fluid and electrolyte needs.
Pain Management	Drugs used to treat graft site pain and to treat pain medication overdose.

F. Low-Volume Payment Adjustment

1. Background

Section 1881(b)(14)(D)(iii) of the Act requires a payment adjustment that ''reflects the extent to which costs incurred by low-volume facilities (as defined by the Secretary) in furnishing renal dialysis services exceed the costs incurred by other facilities in furnishing such services, and for payment for renal dialysis services furnished on or after January 1, 2011, and before January 1, 2014, such payment adjustment shall not be less than 10 percent.'' As a result of this provision and the regression analysis conducted for the ESRD PPS, effective January 1, 2011, the ESRD PPS provides a facility-level payment adjustment of 18.9 percent to ESRD facilities that meet the definition of a low-volume facility.

Under 42 CFR 413.232(b), a low-volume facility is an ESRD facility that: (1) Furnished less than 4,000 treatments in each of the 3 cost reporting years (based on as-filed or final settled 12-consecutive month cost reports, whichever is most recent) preceding the payment year; and (2) Has not opened, closed, or received a new provider number due to a change in ownership in the 3 cost reporting years (based on as-filed or final settled 12-consecutive month cost reports, whichever is most recent) preceding the payment year. Under § 413.232(c), for purposes of determining the number of treatments furnished by the ESRD facility, the number of treatments equals the aggregate number of treatments furnished by other ESRD facilities that are both under common ownership and 25 road miles or less from the ESRD facility in question. This geographic proximity criterion is only applicable to ESRD facilities that were Medicare certified on or after January 1, 2011.

For purposes of determining eligibility for the low-volume payment adjustment (LVPA), ''treatments'' means total hemodialysis (HD) equivalent treatments (Medicare and non-Medicare). For peritoneal dialysis (PD) patients, one week of PD is considered equivalent to 3 HD treatments. In the CY 2012 ESRD PPS final rule (76 FR 70236), we clarified that we base eligibility on the three years preceding the payment year and those years are based on cost reporting periods. We further clarified that the ESRD facility's cost reports for the cost reporting periods ending in the three years preceding the payment year must report costs for 12-consecutive months.

In order to receive the LVPA under the ESRD PPS, an ESRD facility must submit a written attestation statement to its Medicare Administrative Contractor (MAC) that it qualifies as a low-volume ESRD facility and that it meets all of the requirements specified at 42 CFR 413.232. In the CY 2012 ESRD PPS final rule (76 FR 70236), we finalized a yearly November 1 deadline for attestation submission and we revised the regulation at § 413.232(f) to reflect this date. We noted that this timeframe provides 60 days for a MAC to verify that an ESRD facility meets the LVPA eligibility criteria. Further information regarding the administration of the LVPA is provided in CMS Pub. 100–02, Medicare Benefit Policy Manual, chapter 11, section 60.B.1.

2. The United States Government Accountability Office Study on the LVPA

The Medicare Improvements for Patients and Providers Act of 2008 (MIPPA) required the United States Government Accountability Office (the GAO) to study the LVPA. The GAO examined (1) the extent to which the LVPA targeted low-volume, high-cost facilities that appeared necessary for ensuring access to care; and (2) CMS's implementation of the LVPA, including the extent to which CMS paid the 2011 LVPA to facilities eligible to receive the adjustment. To do this work, the GAO reviewed Medicare claims, facilities' annual cost reports, and data on dialysis facilities' locations to identify and compare facilities that were eligible for the LVPA with those that received the adjustment. The GAO published a report 13–287 on March 1, 2013, entitled, ''End-Stage Renal Disease: CMS Should Improve Design and Strengthen Monitoring of Low-Volume Adjustment''. The report found multiple discrepancies in the identification of low-volume facilities which are summarized below.

a. The GAO's Main Findings

The GAO found that many of the facilities eligible for the LVPA were located near other facilities, indicating that they might not have been necessary for ensuring access to care. They also identified certain facilities with relatively low volume that were not eligible for the LVPA but had above-average costs and appeared to be necessary for ensuring access to care. Lastly, they stated the design of the LVPA provides facilities with an adverse incentive to restrict their service provision to avoid reaching the 4,000 treatment threshold. The GAO calculated that Medicare overpaid an estimated $5.3 million for the LVPA to dialysis facilities that did not meet the eligibility requirements established by CMS. They indicated in their report that the guidance that CMS issued for implementation of the regulatory requirements was sometimes unclear and not always available when needed, and the misunderstanding of LVPA eligibility likely was exacerbated because CMS conducted limited monitoring of the Medicare contractors' administration of LVPA payments.

b. The GAO's Recommendations

In the conclusion of their study, the GAO provided Congress with the following recommendations: (1) To more effectively target facilities necessary for ensuring access to care, the Administrator of CMS should consider restricting the LVPA to low-volume facilities that are isolated; (2) To reduce the incentive for facilities to restrict their service provision to avoid reaching the LVPA treatment threshold, the Administrator of CMS should consider revisions such as changing the LVPA to a tiered adjustment; (3) To ensure that future LVPA payments are made only to eligible facilities and to rectify past overpayments, the Administrator of CMS should take the following four actions: Require Medicare contractors to promptly recoup 2011 LVPA payments that were made in error; investigate any errors that contributed to eligible facilities not consistently receiving the 2011 LVPA and ensure that such errors are corrected; take steps to ensure that CMS regulations and guidance regarding the LVPA are clear, timely, and effectively disseminated to both dialysis facilities and Medicare contractors; and improve the timeliness and efficacy of CMS's monitoring regarding the extent to which Medicare contractors are determining LVPA eligibility correctly and promptly redetermining eligibility when all necessary data become available.

In response to the GAO's recommendations, we concurred with the need to ensure that the LVPA is targeted effectively at low-volume high-cost facilities in areas where beneficiaries may lack other dialysis care options. We also agreed to take action to ensure appropriate payment is made in the following ways: (1) Evaluating our policy guidance and contractor instructions to ensure appropriate application of the LVPA; (2) using multiple methods of communication to MACs and ESRD facilities to deliver clear and timely guidance; and (3) improving our monitoring of MACs and considering measures that provide specific expectations.

3. Clarification of the LVPA Policy

For CY 2015, we are not proposing to make changes to the eligibility criteria for the adjustment or to the magnitude of the adjustment value. In accordance with section 632(c) of ATRA, for CY 2016 we will assess and address other necessary LVPA policy changes when we use updated data and reevaluate all of the patient- and facility-level adjustments together in a regression analysis similar to the analysis that is discussed in the CY 2011 ESRD PPS final rule (75 FR 49083). At this time, we are not proposing to change the criteria in such a way that the number of low-volume facilities would deviate substantially from the number of facilities originally modeled to receive the adjustment in the first year of implementation. This is because of the interaction of the LVPA with other payment adjustments under the ESRD PPS. As discussed in the CY 2011 ESRD PPS final rule (75 FR 49081), we standardized the ESRD PPS base rate to account for the payment variables and it would not be appropriate to make changes to one variable in the regression when it could potentially affect the other adjustments or the standardization factor. However, there are two clarifications under the LVPA policy (discussed below) that we can address in this year's rulemaking that we believe are responsive to stakeholder's concerns and GAO's concern that the LVPA should effectively target low-volume, high cost-facilities.

a. Hospital-Based ESRD Facilities

As stated above, for purposes of determining eligibility for the LVPA, ''treatments'' means total hemodialysis (HD) equivalent treatments (Medicare and non-Medicare) and for peritoneal dialysis (PD) patients, one week of PD is considered equivalent to 3 HD treatments. Once a MAC receives an attestation from an ESRD facility, it reviews the ESRD facility's cost reports to verify that the facility meets the low-volume criteria specified at 42 CFR 413.232(b). Specifically, the ESRD facility cost report is used to verify the total treatment count that an ESRD facility furnishes in its fiscal year, which includes Medicare and non-Medicare treatments. For independent ESRD facilities, this information is provided on Worksheet C of the Form CMS–265–11 form (previously Form CMS–265–94) and for hospital-based ESRD facilities, this information is on Worksheet I–4 of the Form CMS–2552–10.

After the LVPA was implemented, we began hearing concerns from multiple stakeholders, including members of Congress and rural hospital-based ESRD facilities, about the MACs' LVPA eligibility determinations. The stakeholders indicated that because hospital-based ESRD facilities are financially integrated with a hospital, their costs and treatment data are aggregated in the I-series of the hospital's cost report. This means that if there is more than one ESRD facility that is affiliated with a hospital, the cost and treatment data for all facilities are aggregated on Worksheet I–4, typically causing the facilities' treatment counts to exceed the 4,000-treatment criterion.

We have learned that some MACs accepted treatment counts from

hospital-based ESRD facilities other than those provided on the hospital's cost report and, as a result, certain hospital-based ESRD facilities received the LVPA. Other MACs solely used the aggregated treatment counts from the hospital's cost report to verify LVPA eligibility, which resulted in denials for many hospital-based facilities that would have qualified for the adjustment if the MACs had considered other supporting documentation.

We agree with stakeholders that limiting the MAC review to the hospital cost reports for verification of LVPA eligibility for hospital-based ESRD facilities places these facilities at a disadvantage and does not comport with the intent of our policy. We believe it can be necessary for MACs to use other supporting data to verify the treatment counts for individual hospital-based facilities that would meet the eligibility criteria for the LVPA if their treatment counts had not been aggregated with one or more other facilities on their hospitals' cost reports. Because LVPA eligibility is based on cost report information and the individual hospital-based facility treatment counts is the source of the aggregated treatment counts reported in the cost report, however, we continue to believe that cost report data is an integral part of the process of verifying whether a hospital-based facility meets the LVPA eligibility criteria.

For these reasons, we are clarifying that MACs may consider other supporting data, such as a hospital-based facility's total treatment count, along with the facility's cost reports and attestation, to verify it meets the low-volume eligibility criteria provided at 42 CFR 413.232(b). The attestation should continue to be configured around the parent hospital's cost reports, that is, it should be for the same fiscal periods. The MAC can consider other supporting data in addition to the total treatments reported in each of the 12-consecutive month cost reports, such as the individual facility's total treatment counts, rather than the hospital's cost report alone, to verify the number of treatments that were furnished by the individual hospital-based facility that is seeking the adjustment. Consistent with this policy clarification, hospital-based ESRD facilities' eligibility for the LVPA should be determined at an individual facility level and their total treatment counts should not be aggregated with other ESRD facilities that are affiliated with the hospital unless the affiliated facilities are commonly owned and within 25 miles.

MACs have discretion as to the format of the attestation and any supporting data, however, the facility must provide the total number of Medicare and non-Medicare treatments for the three cost reporting years preceding the payment year for all of the hospital-based facilities for which treatment counts appear on the hospital's cost report. This will allow MACs to determine which treatments on the cost report were furnished by the individual hospital-based facility that is seeking the LVPA and which treatments were furnished by other affiliated facilities. Finally, we propose to amend the regulation text by adding a new paragraph (h)(1) to § 413.232 to reflect this clarification of current policy under which MACs can verify hospital-based ESRD facilities' eligibility for the LVPA using supporting data in addition to hospital cost reports. We are soliciting comment on the proposed changes at § 413.232(h)(1).

b. Cost Reporting Periods Used for Eligibility

In the CY 2012 ESRD PPS final rule (76 FR 70236), we clarified that for purposes of eligibility under 42 CFR 413.232(b), we base eligibility on the three years preceding the payment year and those years are based on cost reporting periods. We further clarified that the ESRD facility's cost reports for the cost reporting periods ending in the three years preceding the payment year must report costs for 12 consecutive months.

After the LVPA was implemented, we began hearing concerns from the industry that there is a conflict within our policy. Currently, our policy allows an ESRD facility to remain eligible for the LVPA when they have a change of ownership (CHOW) that does not result in a new Provider Transaction Access Number (PTAN). However, our regulations at 42 CFR 413.232(b) suggest that MACs must verify treatment counts using cost reports for 12-consecutive month cost periods even though CHOWs often result in costs reports that are nonstandard, that is, longer or shorter than 12 months. In particular, the previous owner's final cost report may not coincide with the ESRD facility's cost report fiscal year end under its new ownership, resulting in two costs reports that are not 12-consecutive month cost reports. For example, where a CHOW occurs in the middle of the cost reporting period and the new owner wishes to retain the established cost report fiscal year end, the previous owner submits a final cost report covering their period of ownership and the new owner submits a cost report covering the remainder of the cost reporting period. Alternatively, a new owner could also choose not to retain the previous owner's established cost reporting fiscal year end, in which case the CHOW could result in a cost reports that exceed twelve months when combined. Further details regarding the policies for filing cost reports during a CHOW are available in the Provider Reimbursement Manual—Part 1, chapter 15, ''Change of Ownership.''

We agree with the industry that there is a conflict in the policies governing LVPA that may prevent an otherwise qualified ESRD facility from receiving the adjustment. We have always intended that if an ESRD facility has a CHOW where the new owner accepts the previous owner's assets and liabilities by retaining the facility's PTAN, they should continue to be eligible for the LVPA. However, some MACs used a strict reading of the regulatory language and denied these providers the LVPA. Other MACs added short cost reports together or prorated treatment counts for cost reporting periods spanning greater than 12 months.

In order to ensure consistent verification of LVPA eligibility, we are restating our intention that when there is a CHOW that does not result in a new PTAN but creates two non-standard cost reporting periods (that is, periods that are shorter or longer than 12 months) the MAC is either to add the two non-standard cost reporting periods together where combined they would equal 12 consecutive months or prorate the data when they would exceed 12 consecutive months to determine the total treatments furnished for a full cost reporting period as if there had not been a CHOW.

For example, prior to a CHOW, Facility A had a cost reporting period that spanned January 1 through December 31. Facility A had a CHOW mid-year that did not result in a new PTAN but caused a break in the cost reporting period. Consistent with the clarification of our policy, the MAC would add Facility A's cost report that spanned January 1 through May 31 to its cost report that spanned June 1 through December 31 to verify the total treatment count.

The other situation that could occur is when a CHOW results in a change of the original fiscal period. For example, prior to a CHOW, Facility B had a cost reporting period that spanned January 1 through December 31 and, based on its cost reports for 2012 and 2013, it met the LVPA eligibility criteria. Then, Facility B had a CHOW in the beginning of 2014 that did not result in a new PTAN, but changed its cost reporting period to that of its new owner, October

1, 2014 through September 30, 2015. This scenario would create a short and a long cost report that would not total 12 months that the MAC would need to review for verification. That is, Facility B would have a cost report that spanned January 1, 2014 through July 31, 2014 (7 months) and a cost report that spanned August 1, 2014 through September 30, 2015 (14 months).

In this situation, the MAC should combine the two non-standard cost reporting periods that in combination may exceed 12-consecutive months and prorate the data to equal a full 12-consecutive month period. Finally, we propose to amend the regulation text by adding a new paragraph (h)(2) to § 413.232 to clarify the verification process for ESRD facilities that experience a CHOW with no change in the PTAN. We are soliciting comments on the proposed changes at § 413.232(h)(2).

Section 413.232(f) requires ESRD facilities to submit LVPA attestations by November 1 of each year. However, the changes we are proposing to the LVPA regulation text would not be finalized in enough time to give the ESRD facilities the opportunity to learn about the policy clarifications and provide an attestation to their MAC by November 1, 2014. For these reasons, we are proposing to amend § 413.232(f) to extend the deadline for CY 2015 LVPA attestations until December 31, 2014. This timeframe would allow ESRD facilities to reassess their eligibility and apply for the LVPA for CY 2015. It would also give MACs an opportunity to verify any new attestations and reassess LVPA eligibility verifications made since 2011. We will issue guidance with additional detail regarding this policy clarification, which will include details about the process ESRD facilities should follow to seek the LVPA for past years.

G. Continued Use of ICD–9–CM Codes and Corrections to the ICD–10–CM Codes Eligible for the Comorbidity Payment Adjustment

Section 1881(b)(14)(D)(i) of the Act requires that the ESRD PPS include a payment adjustment based upon case mix that may take into account, among other things, patient comorbidities. Comorbidities are specific patient conditions that coexist with the patient's principal diagnosis that necessitates dialysis. The comorbidity payment adjustments recognize the increased costs associated with comorbidities and provide additional payment for certain conditions that occur concurrently with the need for dialysis. For a detailed discussion of our approach to developing the comorbidity payment adjustment, see the CY 2011 ESRD PPS final rule (75 FR 49094 through 49108).

In the CY 2011 ESRD PPS final rule, we finalized six comorbidity categories that are eligible for a comorbidity payment adjustment, each with associated International Classification of Diseases, 9th Revision, Clinical Modification (ICD–9–CM) diagnosis codes (75 FR 49100). These categories include three acute, short-term diagnostic categories (pericarditis, bacterial pneumonia, and gastrointestinal tract bleeding with hemorrhage) and three chronic diagnostic categories (hereditary hemolytic sickle cell anemia, myelodysplastic syndrome, and monoclonal gammopathy). The comorbidity categories eligible for an adjustment and their associated ICD–9–CM codes were published in the Appendix of the CY 2011 ESRD PPS final rule as Table E: ICD–9–CM—Codes Recognized for the Comorbidity Payment Adjustment (75 FR 49211).

In the CY 2012 ESRD PPS final rule (76 FR 70252), we clarified that the ICD–9–CM codes eligible for the comorbidity payment adjustment are subject to the annual ICD–9–CM coding updates that occur in the hospital IPPS final rule and are effective October 1st every year. We explained that any updates to the ICD–9–CM codes that affect the categories of comorbidities and the diagnoses within the comorbidity categories that are eligible for a comorbidity payment adjustment would be communicated to ESRD facilities through sub-regulatory guidance.

Together with the rest of the healthcare industry, CMS was scheduled to implement the 10th revision of the ICD coding scheme—ICD–10—on October 1, 2014. Hence, in the CY 2014 ESRD PPS (78 FR 72175 through 72179), we finalized a policy that ICD–10–CM codes will be eligible for a comorbidity payment adjustment where they crosswalk from ICD–9–CM codes that are eligible for a comorbidity payment adjustment with two exceptions.

On April 1, 2014, PAMA was enacted. Section 212 of PAMA, titled ''Delay in Transition from ICD–9 to ICD–10 Code Sets,'' provides that ''[t]he Secretary of Health and Human Services may not, prior to October 1, 2015, adopt ICD–10 code sets as the standard for code sets under section 1173(c) of the Social Security Act (42 U.S.C. 1320d–2(c)) and section 162.1002 of title 45, Code of Federal Regulations.'' On May 1, 2014, the Secretary announced that HHS expects to issue an interim final rule that will require use of ICD–10 beginning October 1, 2015 and continue to require use of ICD–9–CM through September 30, 2015. This announcement is available on the CMS Web site at *http://cms.gov/Medicare/Coding/ICD10/index.html.* Before the passage of PAMA, our policy required facilities to utilize ICD–10–CM codes to identify comorbidities eligible for the comorbidity payment adjustment beginning October 1, 2014. However, in light of section 212 of PAMA and the Secretary's announcement of the new compliance date for ICD–10, we are proposing to require use of ICD–10–CM to identify comorbidities beginning on October 1, 2015. Until that time, we will continue to require use of the ICD–9–CM codes to identify comorbidities eligible for the comorbidity payment adjustment. The ICD–9–CM codes that are eligible for the comorbidity payment adjustment are listed in the crosswalk tables below.

Because facilities will begin using ICD–10 during the calendar year to which this rule applies, we are correcting several typographical errors and omissions in the Tables that appeared in the CY 2015 ESRD PPS final rule. First, we are correcting one ICD–9–CM diagnosis code that was incorrectly identified due to a typographical error in Table 1—ONE ICD–9–CM CODE CROSSWALKS TO ONE ICD–10–CM CODE (78 FR 72176). In Table 2—ONE ICD–9–CM CODE CROSSWALKS TO MULTIPLE ICD–10–CM CODES (78 FR 72177), we are correcting two ICD–10–CM codes because of typographical errors and proposing two additional ICD–10–CM codes that were inadvertently omitted from the crosswalk. Lastly, in Table 3—MULTIPLE ICD–9–CM CODES CROSSWALK TO ONE ICD–10–CM CODE (78 FR 72178), we are proposing to include 9 additional ICD–10–CM crosswalk codes for eligibility for the comorbidity payment adjustment. These codes were omitted in error from the CY 2014 ESRD PPS final rule, and we have furnished an updated Table 20 below reflecting the additional codes.

We note that the ICD–10–CM codes that facilities will be required to use to identify eligible comorbidities when ICD–10 becomes the required medical data code set on October 1, 2015 are those that were finalized in the CY 2014 ESRD PPS final rule at 78 FR 72175 to 78 FR 72179 with the corrections and proposed additions included below.

Table 18— ONE ICD–9–CM CODE CROSSWALKS TO ONE ICD–10–CM CODE (78 FR 72175 through 78 FR 72176).

Table 18 lists all the instances in which one ICD–9–CM code crosswalks to one ICD–10–CM code. We finalized a policy in last year's rule that all identified ICD–10–CM codes would receive a comorbidity adjustment with the exception of K52.81 Eosinophilic gastritis or gastroenteritis. We have since discovered that under the section titled Myelodysplastic Syndrome, ICD–9–CM code 238.7 Essential thrombocythemia was inaccurately identified. The table below has been amended to accurately identify ICD–9–CM diagnostic code 238.71 Essential thrombocythemia.

TABLE 18—ONE ICD–9–CM CODE CROSSWALKS TO ONE ICD–10–CM CODE

ICD–9 Descriptor	ICD–10 Descriptor
Gastrointestinal Bleeding	
530.21 Ulcer of esophagus with bleeding	K22.11 Ulcer of esophagus with bleeding.
535.71 Eosinophilic gastritis, with hemorrhage	K52.81 Eosinophilic gastritis or gastroenteritis.
537.83 Angiodysplasia of stomach and duodenum with hemorrhage	K31.811 Angiodysplasia of stomach and duodenum with bleeding.
569.85 Angiodysplasia of intestine with hemorrhage	K55.21 Angiodysplasia of colon with hemorrhage.
Bacterial Pneumonia	
003.22 Salmonella pneumonia	A02.22 Salmonella pneumonia.
482.0 Pneumonia due to Klebsiella pneumonia	J15.0 Pneumonia due to Klebsiella pneumoniae.
482.1 Pneumonia due to Pseudomonas	J15.1 Pneumonia due to Pseudomonas.
482.2 Pneumonia due to Hemophilus influenzae [H. influenzae]	J14 Pneumonia due to Hemophilus influenzae.
482.32 Pneumonia due to Streptococcus, group B	J15.3 Pneumonia due to streptococcus, group B.
482.40 Pneumonia due to Staphylococcus, unspecified	J15.20 Pneumonia due to staphylococcus, unspecified.
482.41 Methicillin susceptible pneumonia due to Staphylococcus aureus.	J15.211 Pneumonia due to Methicillin susceptible Staphylococcus aureus.
482.42 Methicillin resistant pneumonia due to Staphylococcus aureus	J15.212 Pneumonia due to Methicillin resistant Staphylococcus aureus.
482.49 Other Staphylococcus pneumonia	J15.29 Pneumonia due to other staphylococcus.
482.82 Pneumonia due to escherichia coli [E. coli]	J15.5 Pneumonia due to Escherichia coli.
482.83 Pneumonia due to other gram-negative bacteria	J15.6 Pneumonia due to other aerobic Gram-negative bacteria.
482.84 Pneumonia due to Legionnaires' disease	A48.1 Legionnaires' disease.
507.0 Pneumonitis due to inhalation of food or vomitus	J69.0 Pneumonitis due to inhalation of food and vomit.
507.8 Pneumonitis due to other solids and liquids	J69.8 Pneumonitis due to inhalation of other solids and liquids.
510.0 Empyema with fistula	J86.0 Pyothorax with fistula.
510.9 Empyema without mention of fistula	J86.9 Pyothorax without fistula.
Pericarditis	
420.91 Acute idiopathic pericarditis	I30.0 Acute nonspecific idiopathic pericarditis.
Hereditary Hemolytic and Sickle Cell Anemia	
282.0 Hereditary spherocytosis	D58.0 Hereditary spherocytosis.
282.1 Hereditary elliptocytosis	D58.1 Hereditary elliptocytosis.
282.41 Sickle-cell thalassemia without crisis	D57.40 Sickle-cell thalassemia without crisis.
282.43 Alpha thalassemia	D56.0 Alpha thalassemia.
282.44 Beta thalassemia	D56.1 Beta thalassemia.
282.45 Delta-beta thalassemia	D56.2 Delta-beta thalassemia.
282.46 Thalassemia minor	D56.3 Thalassemia minor.
282.47 Hemoglobin E-beta thalassemia	D56.5 Hemoglobin E-beta thalassemia.
282.49 Other thalassemia	D56.8 Other thalassemias.
282.61 Hb-SS disease without crisis	D57.1 Sickle-cell disease without crisis.
282.63 Sickle-cell/Hb-C disease without crisis	D57.20 Sickle-cell/Hb-C disease without crisis.
282.68 Other sickle-cell disease without crisis	D57.80 Other sickle-cell disorders without crisis.
Myelodysplastic Syndrome	
238.71 Essential thrombocythemia	D47.3 Essential (hemorrhagic) thrombocythemia.
238.73 High grade myelodysplastic syndrome lesions	D46.22 Refractory anemia with excess of blasts 2.
238.74 Myelodysplastic syndrome with 5q deletion	D46.C Myelodysplastic syndrome with isolated del(5q) chromosomal abnormality.
238.76 Myelofibrosis with myeloid metaplasia	D47.1 Chronic myeloproliferative disease.

Table 19—ONE ICD–9–CM CODE CROSSWALKS TO MULIPLE ICD–10–CM CODES (78 FR 72177 through 78 FR 72178).

Table 19 lists all of the instances in which one ICD–9–CM code crosswalks to multiple ICD–10–CM codes. We finalized a policy in last year's rule that all identified ICD–10–CM codes would receive a comorbidity adjustment with the exception of D89.2 Hypergammaglobulinemia, unspecified. Under the section titled Gastrointestinal Bleeding, ICD–9–CM code 562 Diverticulosis of small intestine with hemorrhage was inaccurately identified, as the complete code number is 562.02. The table below has been amended to accurately identify ICD–9–CM diagnostic code 562.02 Diverticulosis of small intestine with hemorrhage.

Also under the section titled Gastrointestinal Bleeding, ICD–9–CM diagnostic code 562.13 Diverticulitis of colon with hemorrhage did not include a complete crosswalk to ICD–10–CM diagnostic codes. Therefore, we propose to include ICD–10–CM diagnostic codes K57.81 Diverticulitis of intestine, part unspecified, with perforation and abscess with bleeding and K57.93 Diverticulitis of intestine, part unspecified, without perforation or abscess with bleeding, in addition to the ICD–10–CM diagnostic codes K57.21, K57.33, K57.41, and K57.53, as eligible for the comorbidity payment adjustment when the use of ICD–10–CM is required, on October 1, 2015.

Under the section titled Pericarditis, ICD–10–CM code 130.1 Infective pericarditis was inaccurately identified. The table below has been amended to accurately identify the ICD–10–CM diagnostic code I30.1 Infective pericarditis as eligible for a comorbidity payment adjustment when the use of ICD–10–CM is required, on October 1, 2015.

TABLE 19—ONE ICD–9–CM CODE CROSSWALKS TO MULTIPLE ICD–10–CM CODES

ICD–9 Descriptor	ICD–10 Descriptor
Gastrointestinal Bleeding	
562.02 Diverticulosis of small intestine with hemorrhage	K57.11 Diverticulosis of small intestine without perforation or abscess with bleeding. K57.51 Diverticulosis of both small and large intestine without perforation or abscess with bleeding.
562.03 Diverticulitis of small intestine with hemorrhage	K57.01 Diverticulitis of small intestine with perforation and abscess with bleeding. K57.13 Diverticulitis of small intestine without perforation or abscess with bleeding. K57.41 Diverticulitis of both small and large intestine with perforation and abscess with bleeding. K57.53 Diverticulitis of both small and large intestine without perforation or abscess with bleeding.
562.12 Diverticulosis of colon with hemorrhage	K57.31 Diverticulosis of large intestine without perforation or abscess with bleeding. K57.91 Diverticulosis of intestine, part unspecified, without perforation or abscess with bleeding. K57.51 Diverticulosis of both small and large intestine without perforation or abscess with bleeding.
562.13 Diverticulitis of colon with hemorrhage	K57.21 Diverticulitis of large intestine with perforation and abscess with bleeding. K57.33 Diverticulitis of large intestine without perforation or abscess with bleeding. K57.41 Diverticulitis of both small and large intestine with perforation and abscess with bleeding. K57.53 Diverticulitis of both small and large intestine without perforation or abscess with bleeding. K57.81 Diverticulitis of intestine, part unspecified, with perforation and abscess with bleeding.
K57.93 Diverticulitis of intestine, part unspecified, without perforation or abscess with bleeding.	
Bacterial Pneumonia	
513.0 Abscess of lung	J85.0 Gangrene and necrosis of lung. J85.1 Abscess of lung with pneumonia. J85.2 Abscess of lung without pneumonia.
Pericarditis	
420.0 Acute pericarditis in diseases classified elsewhere	A18.84 Tuberculosis of heart. I32 Pericarditis in diseases classified elsewhere. M32.12 Pericarditis in systemic lupus erythematosus.
420.90 Acute pericarditis, unspecified	I30.1 Infective pericarditis. I30.9 Acute pericarditis, unspecified.
420.99 Other acute pericarditis.	I30.8 Other forms of acute pericarditis. I30.9 Acute pericarditis, unspecified.
Hereditary Hemolytic and sickle cell anemia	
282.2 Anemias due to disorders of glutathione metabolism	D55.0 Anemia due to glucose-6-phosphate dehydrogenase [G6PD] deficiency. D55.1 Anemia due to other disorders of glutathione metabolism.
282.3 Other hemolytic anemias due to enzyme deficiency	D55.2 Anemia due to disorders of glycolytic enzymes. D55.3 Anemia due to disorders of nucleotide metabolism. D55.8 Other anemias due to enzyme disorders. D55.9 Anemia due to enzyme disorder, unspecified.
282.42 Sickle-cell thalassemia with crisis	D57.411 Sickle-cell thalassemia with acute chest syndrome. D57.412 Sickle-cell thalassemia with splenic sequestration.

TABLE 19—ONE ICD–9–CM CODE CROSSWALKS TO MULTIPLE ICD–10–CM CODES—Continued

ICD–9 Descriptor	ICD–10 Descriptor
	D57.419 Sickle-cell thalassemia with crisis, unspecified.
282.62 Hb-SS disease with crisis	D57.00 Hb-SS disease with crisis, unspecified.
	D57.01 Hb-SS disease with acute chest syndrome.
	D57.02 Hb-SS disease with splenic sequestration.
282.64 Sickle-cell/Hb-C disease with crisis	D57.211 Sickle-cell/Hb-C disease with acute chest syndrome.
	D57.212 Sickle-cell/Hb-C disease with splenic sequestration.
	D57.219 Sickle-cell/Hb-C disease with crisis, unspecified.
282.69 Other sickle-cell disease with crisis	D57.811 Other sickle-cell disorders with acute chest syndrome.
	D57.812 Other sickle-cell disorders with splenic sequestration.
	D57.819 Other sickle-cell disorders with crisis, unspecified.
Monoclonal Gammopathy	
273.1 Monoclonal paraproteinemia	D47.2 Monoclonal gammopathy.
	D89.2 Hypergammaglobulinemia, unspecified.
Myelodysplastic Syndrome	
238.72 Low grade myelodysplastic syndrome lesions	D46.0 Refractory anemia without ring sideroblasts, so stated.
	D46.1 Refractory anemia with ring sideroblasts.
	D46.20 Refractory anemia with excess of blasts, unspecified.
	D46.21 Refractory anemia with excess of blasts 1.
	D46.4 Refractory anemia, unspecified.
	D46.A Refractory cytopenia with multilineage dysplasia.
	D46.B Refractory cytopenia with multilineage dysplasia and ring sideroblasts.
238.75 Myelodysplastic syndrome, unspecified	D46.9 Myelodysplastic syndrome, unspecified.
	D46.Z Other myelodysplastic syndromes.

Table 20—MULTIPLE ICD–9–CM CODES CROSSWALK TO ONE ICD–10–CM CODE (78 FR 72178).

Table 20 displays the crosswalk where multiple ICD–9–CM codes crosswalk to one ICD–10–CM code. We finalized a policy in last year's rule that all of the ICD–10–CM codes listed in Table 3 would be eligible for the comorbidity payment adjustment. Under the section titled Gastrointestinal Bleeding, nine ICD–10–CM codes (K25.0 Acute gastric ulcer with hemorrhage, K25.2 Acute gastric ulcer with both hemorrhage and perforation, K25.4 Chronic or unspecified gastric ulcer with hemorrhage, K25.6 Chronic or unspecified gastric ulcer with both hemorrhage and perforation, K26.0 Acute duodenal ulcer with hemorrhage, K26.2 Acute duodenal ulcer with both hemorrhage and perforation, K26.4 Chronic or unspecified duodenal ulcer with hemorrhage, K26.6 Chronic or unspecified duodenal ulcer with both hemorrhage and perforation, and K27.0 Acute peptic ulcer, site unspecified, with hemorrhage) and the corresponding ICD–9–CM codes were inadvertently omitted from the crosswalk. We propose that these ICD–10–CM diagnostic codes—K25.0, K25.2 K25.4, K25.6, K26.0, K26.2, K26.4, K26.6, K27.0—will be eligible for the comorbidity payment adjustment beginning October 1, 2015. We also propose that the corresponding ICD–9–CM codes will be eligible for the comorbidity adjustment through September 30, 2015.

TABLE 20—MULTIPLE ICD–9–CM CODES CROSSWALK TO ONE ICD–10–CM CODE

Gastrointestinal Bleeding	
531.00 Acute gastric ulcer with hemorrhage, without mention of obstruction.	K25.0 Acute gastric ulcer with hemorrhage.
531.01 Acute gastric ulcer with hemorrhage, with obstruction.	
531.20 Acute gastric ulcer with hemorrhage and perforation, without mention of obstruction.	K25.2 Acute gastric ulcer with both hemorrhage and perforation.
531.21 Acute gastric ulcer with hemorrhage and perforation, with obstruction.	
531.40 Chronic or unspecified gastric ulcer with hemorrhage, without mention of obstruction.	K25.4 Chronic or unspecified gastric ulcer with hemorrhage.
531.41 Chronic or unspecified gastric ulcer with hemorrhage, with obstruction.	
531.60 Chronic or unspecified gastric ulcer with hemorrhage and perforation, without mention of obstruction.	K25.6 Chronic or unspecified gastric ulcer with both hemorrhage and perforation.
531.61 Chronic or unspecified gastric ulcer with hemorrhage and perforation, with obstruction.	
532.00 Acute duodenal ulcer with hemorrhage, without mention of obstruction.	K26.0 Acute duodenal ulcer with hemorrhage.
532.01 Acute duodenal ulcer with hemorrhage, with obstruction.	
532.20 Acute duodenal ulcer with hemorrhage and perforation, without mention of obstruction.	K26.2 Acute duodenal ulcer with both hemorrhage and perforation.

TABLE 20—MULTIPLE ICD–9–CM CODES CROSSWALK TO ONE ICD–10–CM CODE—Continued

532.21 Acute duodenal ulcer with hemorrhage and perforation, with obstruction.	
532.40 Chronic or unspecified duodenal ulcer with hemorrhage, without mention of obstruction.	K26.4 Chronic or unspecified duodenal ulcer with hemorrhage.
532.41 Chronic or unspecified duodenal ulcer with hemorrhage, with obstruction.	
532.60 Chronic or unspecified duodenal ulcer with hemorrhage and perforation, without mention of obstruction.	K26.6 Chronic or unspecified duodenal ulcer with both hemorrhage and perforation.
532.61 Chronic or unspecified duodenal ulcer with hemorrhage and perforation, with obstruction.	
533.00 Acute peptic ulcer of unspecified site with hemorrhage, without mention of obstruction.	K27.0 Acute peptic ulcer, site unspecified, with hemorrhage.
533.01 Acute peptic ulcer of unspecified site with hemorrhage, with obstruction.	
533.20 Acute peptic ulcer of unspecified site with hemorrhage and perforation, without mention of obstruction.	K27.2 Acute peptic ulcer, site unspecified, with both hemorrhage and perforation.
533.21 Acute peptic ulcer of unspecified site with hemorrhage and perforation, with obstruction.	
533.40 Chronic or unspecified peptic ulcer of unspecified site with hemorrhage, without mention of obstruction.	K27.4 Chronic or unspecified peptic ulcer, site unspecified, with hemorrhage.
533.41 Chronic or unspecified peptic ulcer of unspecified site with hemorrhage, with obstruction.	
533.60 Chronic or unspecified peptic ulcer of unspecified site with hemorrhage and perforation, without mention of obstruction.	K27.6 Chronic or unspecified peptic ulcer, site unspecified, with both hemorrhage and perforation.
533.61 Chronic or unspecified peptic ulcer of unspecified site with hemorrhage and perforation, with obstruction.	
534.00 Acute gastrojejunal ulcer with hemorrhage, without mention of obstruction.	K28.0 Acute gastrojejunal ulcer with hemorrhage.
534.01 Acute gastrojejunal ulcer, with hemorrhage, with obstruction.	
534.20 Acute gastrojejunal ulcer with hemorrhage and perforation, without mention of obstruction.	K28.2 Acute gastrojejunal ulcer with both hemorrhage and perforation.
534.21 Acute gastrojejunal ulcer with hemorrhage and perforation, with obstruction.	
534.40 Chronic or unspecified gastrojejunal ulcer with hemorrhage, without mention of obstruction.	K28.4 Chronic or unspecified gastrojejunal ulcer with hemorrhage.
534.41 Chronic or unspecified gastrojejunal ulcer, with hemorrhage, with obstruction.	
534.60 Chronic or unspecified gastrojejunal ulcer with hemorrhage and perforation, without mention of obstruction.	K28.6 Chronic or unspecified gastrojejunal ulcer with both hemorrhage and perforation.
534.61 Chronic or unspecified gastrojejunal ulcer with hemorrhage and perforation, with obstruction.	
Bacterial Pneumonia	
482.30 Pneumonia due to Streptococcus, unspecified	J15.4 Pneumonia due to other streptococci.
482.31 Pneumonia due to Streptococcus, group A.	
482.39 Pneumonia due to other Streptococcus.	
482.81 Pneumonia due to anaerobes	J15.8 Pneumonia due to other specified bacteria.
482.89 Pneumonia due to other specified bacteria.	

III. End-Stage Renal Disease (ESRD) Quality Incentive Program (QIP)

A. Background

For more than 30 years, monitoring the quality of care provided by dialysis facilities to patients with end-stage renal disease (ESRD) has been an important component of the Medicare ESRD payment system. The ESRD Quality Incentive Program (QIP) is the most recent step in fostering improved patient outcomes by establishing incentives for dialysis facilities to meet or exceed performance standards established by CMS. The ESRD QIP is authorized by section 1881(h) of the Social Security Act (the Act), which was added by section 153(c) of the Medicare Improvements for Patients and Providers Act (MIPPA).

Specifically, section 1881(h) requires the Secretary to establish an ESRD QIP by (i) selecting measures; (ii) establishing the performance standards that apply to the individual measures; (iii) specifying a performance period with respect to a year; (iv) developing a methodology for assessing the total performance of each facility based on the performance standards with respect to the measures for a performance period; and (v) applying an appropriate payment reduction to facilities that do not meet or exceed the established Total Performance Score (TPS). This proposed rule discusses each of these elements and our proposals for their application to the ESRD QIP, including for PYs 2017 and 2018.

B. Considerations in Updating and Expanding Quality Measures Under the ESRD QIP

Throughout the past decade, Medicare has been transitioning from a program that pays for healthcare based on particular services furnished to a beneficiary to a program that bases payments to providers and suppliers on the quality of services they furnish. By paying for the quality of care rather than simply the quantity of care, and by focusing on better care and lower costs through improvement, prevention and population health, expanded healthcare coverage, and enterprise excellence, we are strengthening the healthcare system

while also advancing the National Strategy for Quality Improvement in Health Care (that is, the National Quality Strategy (NQS)). We are also working to update a set of domains and specific quality measures for our VBP programs, and to link the aims of the NQS with our payment policies on a national scale. We are working in partnership with beneficiaries, providers, advocacy groups, the National Quality Forum (NQF), the Measures Application Partnership, operating divisions within the Department of Health and Human Services (HHS), and other stakeholders to develop new measures where gaps exist, refine measures where necessary, and remove measures when appropriate. We are also collaborating with stakeholders to ensure that the ESRD QIP serves the needs of our beneficiaries and also advances the goals of the NQS to improve the overall quality of care, improve the health of the U.S. population, and reduce the cost of quality healthcare.[2]

We believe that the development of an ESRD QIP that is successful in supporting the delivery of high-quality healthcare services in dialysis facilities is paramount. We seek to adopt measures for the ESRD QIP that promote better, safer, and more coordinated care. Our measure development and selection activities for the ESRD QIP take into account national priorities such as those established by the HHS Strategic Plan (*http://www.hhs.gov/strategic-plan/priorities.html*), the NQS (*http://www.ahrq.gov/workingforquality/nqs/nqs2013annlrpt.htm*), and the HHS National Action Plan to Prevent Healthcare Associated Infections (HAIs) (*http://www.hhs.gov/ash/initiatives/hai/esrd.html*). To the extent feasible and practicable, we have sought to adopt measures that have been endorsed by a national consensus organization; recommended by multi-stakeholder organizations; and developed with the input of providers, beneficiaries, health advocacy organizations, and other stakeholders.

C. Web Sites for Measure Specifications

In an effort to ensure that facilities and the general public are able to continue accessing the specifications for the measures that are being proposed for and have been adopted in the ESRD QIP, we are now posting these measure specifications on a CMS Web site, instead of posting them on *www.dialysisreports.org* as we have in the past. Measure specifications from previous years, as well as those proposed for the PY 2017 and PY 2018 programs, can be found at: *http://www.cms.gov/Medicare/Quality-Initiatives-Patient-Assessment-Instruments/ESRDQIP/061_TechnicalSpecifications.html.*

D. Updating the NHSN Bloodstream Infection in Hemodialysis Outpatients Clinical Measure for the PY 2016 ESRD QIP and Future Payment Years

The NHSN Bloodstream Infection in Hemodialysis Outpatients clinical measure (that is, NHSN Bloodstream Infection clinical measure) that we adopted beginning with the PY 2016 ESRD QIP is based on NQF #1460. At the time we adopted it, the measure included a risk adjustment for patients' vascular access type but did not include any reliability adjustments to account for differences in the amount of exposure or opportunity for healthcare associated infections (HAIs) among patients. On April 4, 2014, in response to a measure update proposal submitted by CDC, NQF endorsed a reliability adjustment for volume of exposure and unmeasured variation across facilities to NQF #1460. This reliability adjustment is called the Reliability-Adjusted Standardized Infection Ratio or Adjusted Ranking Metric (ARM). As a result of this change to the NQF-endorsed measure specifications, a facility's performance on NQF #1460 will be adjusted towards the mean (that is, facilities with low exposure volume will be adjusted more than facilities with high exposure volume, and the performance rate will be adjusted up or down depending on the facility estimate and mean) to account for the differences in the reliability of the infection estimates based on the number of patient-months at a facility and any unmeasured variation across facilities. Because the adjustment is based on the volume of exposure, facility scores will be adjusted more if there are fewer patient-months in the denominator, and facility scores will be adjusted less if there are many patient-months in the denominator.

We propose to adopt the same reliability adjustment for purposes of calculating facility performance on the NHSN Bloodstream Infection clinical measure, beginning with the PY 2016 ESRD QIP. We believe that the inclusion of this reliability adjustment, in addition to the risk factor adjustment, will enable us to better differentiate among facility performance on this measure, because it accounts not only for the variation in patient risk by vascular access type, but also for variation in the number of patients a facility treats in a given month. The ARM will be incorporated into the existing risk-adjustment methodology, which will also continue to include a risk adjustment for patient vascular access type. Further information about the reliability adjustment, and the NHSN Bloodstream Infection measure specifications can be found at *http://www.cdc.gov/nhsn/PDFs/dialysis/NHSN–ARM.pdf, http://www.cdc.gov/nhsn/dialysis/dialysis-event.html,* and *http://www.cms.gov/Medicare/Quality-Initiatives-Patient-Assessment-Instruments/ESRDQIP/061_TechnicalSpecifications.html.*

E. Oral-Only Drugs Measures in the ESRD QIP

Section 217(d) of the Protecting Access to Medicare Act of 2014 (Pub. L. 113–93), enacted on April 1, 2014, amends section 1881(h)(2) of the Act to require the Secretary, for PY 2016 and subsequent years, to adopt measures (outcome-based, to the extent feasible) in the ESRD QIP that are specific to the conditions treated with oral-only drugs. We believe that the Hypercalcemia clinical measure adopted beginning with the PY 2016 program (78 FR 72200 through 72203) meets this new statutory requirement because hypercalcemia is a condition that is treated with oral-only drugs. The Hypercalcemia clinical measure is not an outcome-based measure, and we have considered the possibility of adopting outcomes-based measures that pertain to conditions treated with oral-only drugs. However, we have determined that it is not feasible to propose to adopt an outcome-based measure on this topic at this time because we are not aware of any outcome measures developed on this topic.

F. Proposed Requirements for the PY 2017 ESRD QIP

1. Proposed Revision to the Expanded ICH CAHPS Reporting Measure

For the ICH CAHPS reporting measure, we are proposing one change to the reporting requirements finalized in the CY 2014 ESRD PPS Final Rule for PY 2017. In the CY 2014 ESRD PPS final rule, we finalized that facilities would be eligible to receive a score on the measure if they treated 30 or more survey-eligible patients during the performance period (78 FR 72220 through 72221). Subsequently, we were made aware that facilities may not know whether they will have enough survey-eligible patients during the performance period to be eligible for the ICH CAHPS

[2] 2013 Annual Progress Report to Congress: National Strategy for Quality Improvement in Health Care, *http://www.ahrq.gov/workingforquality/nqs/nqs2013annlrpt.htm.*

measure when they are making decisions about whether or not they will contract with a vendor to administer the survey. We agree that it would be preferable if facilities knew at the beginning of the performance period if they will be eligible to receive a score on the ICH CAHPS measure, because this would allow facilities to make informed decisions about whether they should contract with a vendor to administer the survey. For this reason, we propose that beginning with the PY 2017 program, facilities will be eligible to receive a score on the ICH CAHPS measure if they treat 30 or more survey-eligible patients during the ''eligibility period,'' which we define as the CY before the performance period. However, even if a facility is eligible to receive a score on the measure because it has treated at least 30 survey-eligible patients according to the ICH CAHPS Survey measure specifications during the calendar year prior to the performance period, we are proposing that the facility will still not receive a score for performance during the performance period if it cannot collect 30 survey completes during the performance period. We believe that facilities should be able to determine quickly the number of survey-eligible patients that they treated during the eligibility period, and that reaching this determination should not impact facilities' ability to contract with a vender in time to meet the semiannual survey administration requirements. Technical specifications for the ICH CAHPS reporting measure can be found at: *http://www.cms.gov/Medicare/Quality-Initiatives-Patient-Assessment-Instruments/ESRDQIP/061_TechnicalSpecifications.html.*

We seek comments on this proposal.

2. Proposed Measures for the PY 2017 ESRD QIP

a. PY 2016 Measures Continuing in PY 2017 and Future Payment Years

We previously finalized 11 measures in the CY 2014 ESRD PPS Final Rule for the PY 2016 ESRD QIP, and these measures are summarized in Table 21 below. In accordance with our policy to continue using measures unless we propose to remove or replace them (77 FR 67477), we will continue to use 10 of these 11 measures in the PY 2017 ESRD QIP. As we discuss in more detail below, we are proposing to remove one measure, Hemoglobin Greater than 12 g/dL, beginning with the PY 2017 measure set (see Table 22 below).

TABLE 21—PY 2016 ESRD QIP MEASURES BEING CONTINUED IN PY 2017

NQF #	Measure title and description
0249	Hemodialysis Adequacy: Minimum delivered hemodialysis dose. Percent of hemodialysis patient-months with spKt/V greater than or equal to 1.2.
0318	Peritoneal Dialysis Adequacy: Delivered dose above minimum. Percent of peritoneal dialysis patient-months with spKt/V greater than or equal to 1.7 (dialytic + residual) during the four month study period.
1423	Pediatric Hemodialysis Adequacy: Minimum spKt/V. Percent of pediatric in-center hemodialysis patient-months with spKt/V greater than or equal to 1.2.
0257	Vascular Access Type: AV Fistula. Percentage of patient-months on hemodialysis during the last hemodialysis treatment of the month using an autogenous AV fistula with two needles.
0256	Vascular Access Type: Catheter > 90 days. Percentage of patient-months for patients on hemodialysis during the last hemodialysis treatment of month with a catheter continuously for 90 days or longer prior to the last hemodialysis session.
N/A [1]	National Healthcare Safety Network (NHSN) Bloodstream Infection in Hemodialysis Patients. Number of hemodialysis outpatients with positive blood cultures per 100 hemodialysis patient-months.[2]
1454	Hypercalcemia. Proportion of patient-months with 3-month rolling average of total uncorrected serum calcium greater than 10.2 mg/dL.
N/A [3]	In-Center Hemodialysis Consumer Assessment of Healthcare Providers and Systems (ICH CAHPS) Survey Administration. Facility administers, using a third-party CMS-approved vendor, the ICH CAHPS survey in accordance with survey specifications and submits survey results to CMS.
N/A [4]	Mineral Metabolism Reporting. Number of months for which facility reports serum phosphorus for each Medicare patient.
N/A	Anemia Management Reporting. Number of months for which facility reports ESA dosage (as applicable) and hemoglobin/hematocrit for each Medicare patient.

[1] We note that this measure is based on a current NQF-endorsed bloodstream infection measure (NQF#1460).

[2] We are proposing a new method of calculating performance on this measure using the ARM methodology. If we decide to finalize this proposal based on public comments, the NHSN Bloodstream Infection clinical measure description will be updated to read: ''ARM of Bloodstream Infection will be calculated among inpatients receiving hemodialysis at outpatient hemodialysis centers.''

[3] We note that a related measure utilizing the results of this survey has been NQF-endorsed (#0258). We are proposing to adopt NQF #0258 in the PY 2018 program.

[4] We note that this measure is based upon a current NQF-endorsed serum phosphorus measure (NQF #0255).

TABLE 22—MEASURE PROPOSED FOR REMOVAL BEGINNING WITH THE PY 2017 ESRD QIP

NQF#	Measure title
N/A	Anemia Management: Hgb >12. Percentage of Medicare patients with a mean hemoglobin value greater than 12 g/dL.

b. Proposal To Determine When a Measure is ''Topped-Out'' in the ESRD QIP, and Proposal To Remove a Topped-Out Measure From the ESRD QIP, Beginning With PY 2017

In the CY 2013 ESRD PPS final rule (77 FR 67475), we finalized a list of seven criteria we would consider when making determinations about whether to remove or replace a measure: ''(1) Measure performance among the majority of ESRD facilities is so high and unvarying that meaningful distinctions in improvements or performance can no longer be made; (2) performance or improvement on a measure does not result in better or the intended patient outcomes; (3) a measure no longer aligns with current clinical guidelines or practice; (4) a more broadly applicable (across settings, populations, or conditions) measure for the topic becomes available; (5) a measure that is more proximal in time to desired patient outcomes for the particular topic becomes available; (6) a measure that is more strongly associated with desired patient outcomes for the particular topic becomes available; or (7) collection or public reporting of a measure leads to negative unintended consequences.''

In the CY 2014 ESRD PPS final rule (78 FR 72192), we stated that we were in the process of evaluating all of the ESRD QIP measures against the criteria. Subsequent to the publication of the CY 2014 ESRD PPS final rule, we completed our evaluation and determined that none of the measures finalized in the PY 2016 ESRD QIP met criteria 2 through 7, as listed above. With respect to the first criterion, we are proposing to more specifically define when performance on a clinical measure is so high and unvarying that the measure no longer reflects meaningful distinctions in improvements or performance. The statistical definitions that we are proposing to adopt will align our methodology with that used by the Hospital VBP program to determine when a measure is topped out (76 FR 26496 through 26497). Under this methodology, a clinical measure is considered to be topped out if national measure data show (1) statistically indistinguishable performance levels at the 75th and 90th percentiles; and (2) a truncated coefficient of variation (CV) of less than or equal to 0.1.

To determine whether a clinical measure is topped out, we initially focused on the top distribution of facility performance on each measure and noted if their 75th and 90th percentiles were statistically indistinguishable. Then, to ensure that we properly accounted for the entire distribution of scores, we analyzed the truncated coefficient of variation (CV) for each of the clinical measures.

The CV is a common statistic that expresses the standard deviation as a percentage of the sample mean in a way that is independent of the units of observation. Applied to this analysis, a large CV would indicate a broad distribution of individual facility scores, with large and presumably meaningful differences between hospitals in relative performance. A small CV would indicate that the distribution of individual facility scores is clustered tightly around the mean value, suggesting that it is not useful to draw distinctions between individual facility performance scores. We used a modified version of the CV, namely a truncated CV, for each clinical measure, in which the 5 percent of facilities with the lowest scores, and the 5 percent of facilities with the highest scores were first truncated (set aside) before calculating the CV. This was done to avoid undue effects of the highest and lowest outlier facilities; if included, they would tend to greatly widen the dispersion of the distribution and make the clinical measure appear to be more reliable or discerning. For example, a clinical measure for which most facility scores are tightly clustered around the mean value (a small CV) might actually reflect a more robust dispersion if there were also a number of facilities with extreme outlier values, which would greatly increase the perceived variance in the measure. Accordingly, the truncated CV of less than or equal to 0.10 was added as a criterion for determining whether a clinical measure is topped out.

We seek comments on this proposal.

We evaluated each of the clinical measures finalized in the PY 2016 ESRD QIP against these proposed statistical conditions. The full analysis is available at: *http://www.cms.gov/Medicare/Quality-Initiatives-Patient-Assessment-Instruments/ESRDQIP/061_Technical Specifications.html.* The results of that analysis appear below in Table 23.

TABLE 23—PY 2016 CLINICAL MEASURES USING CROWNWEB AND MEDICARE CLAIMS DATA FROM JANUARY 2013–DECEMBER 2013

Measure	N	75th percentile	90th percentile	Std. error	Statistically indistin-guishable	Truncated CV	TCV <0.10
Adult HD Kt/V	5665	96.1	97.4	0.13	No	0.04	Yes.
Adult PD Kt/V	1176	92.9	94.8	0.55	No	0.15	No.
Pediatric HD Kt/V	10	94.5	97.1	2.71	Yes	0.08	Yes.
Hgb > 12	5521	0.0	0.0	0.02	Yes	< 0.01	Yes.
Fistula Use	5561	72.3	77.0	0.16	No	0.14	No.
Catheter Use	5586	5.9	2.8	0.10	No	≤ 0.01	Yes.
Hypercalcemia	5685	0.3	0.0	0.04	No	≤ 0.01	Yes.

As the information presented in Table 23 suggests, the Hemoglobin Greater than 12 g/dL measure meets the proposed criteria for determining when a clinical measure is topped-out in the ESRD QIP. Accordingly, we propose to remove the Hemoglobin Greater than 12 g/dL measure from the ESRD QIP, beginning with the PY 2017 program. We recognize that the Pediatric Hemodialysis Adequacy measure also meets the conditions for being a topped-out clinical measure in the ESRD QIP. However, we are not proposing to remove the Pediatric Hemodialysis Adequacy measure from the ESRD QIP because we have determined that removing the measure will not be useful for dialysis facilities. There are currently very few measures available that focus on the care furnished to

pediatric patients with ESRD, and we are reticent to remove a measure that addresses the unique needs of this population. In addition, although only 10 facilities were eligible to receive a score on the Pediatric Hemodialysis Adequacy measure (based on CY 2013 data), we believe that the publicly reported performance of these facilities can influence the standard of care furnished by other facilities that treat pediatric patients, even if a facility does not treat a sufficient number of pediatric patients to be eligible to be scored on the measure.

For these reasons, we believe that the drawbacks of removing a topped out clinical measure could be outweighed by the other benefits to retaining the measure. Accordingly, we propose that even if we determine that a clinical measure is topped out according to the statistical criteria we apply, we will not remove or replace it if we determine that its continued inclusion in the ESRD QIP measure set will continue to set a high standard of care for dialysis facilities.

We seek comments on these proposals.

c. New Measures Proposed for PY 2017 and Future Payment Years

As the program evolves, we believe it is important to continue to evaluate and expand the measures selected for the ESRD QIP. Therefore, for the PY 2017 ESRD QIP and future payment years, we are proposing to adopt one new clinical measure that addresses care coordination (see Table 24).

TABLE 24—NEW MEASURE PROPOSED FOR THE PY 2017 ESRD QIP

NQF#	Measure title
N/A [1]	Standardized Readmission Ratio, a clinical measure. Risk-adjusted standardized hospital readmissions ratio.

[1] We note that this measure is currently under review at NQF.

i. Proposed Standardized Readmission Ratio (SRR) Clinical Measure

Background

At the end of 2011, 615,899 patients were being dialyzed, 115,643 of whom were new (incident) patients with ESRD.[3] The SRR measure assesses the rate of unplanned readmissions of ESRD patients to an acute care hospital within 30 days of an index discharge from an acute care hospital, thereby identifying potentially poor or incomplete quality of care in the dialysis facility. In addition, the SRR reflects an aspect of ESRD care that is especially resource-intensive. In 2011, the total amount paid by Medicare for the ESRD program was approximately $34.3 billion, a 5.4 percent increase from 2010.[2] In particular, Medicare paid more than $10.5 billion for costs associated with hospitalized ESRD patients in 2011. In 2011, ESRD dialysis patients were admitted to the hospital twice on average, and spent an average of 12 total days in the hospital over the year, accounting for approximately 38 percent of Medicare expenditures for patients with ESRD.[2] Furthermore, a substantial percentage (30 percent) of ESRD patients discharged from the hospital have an unplanned readmission within 30 days.[2] In the non-ESRD population, clinical studies have demonstrated that improved care coordination and discharge planning may reduce readmission rates. The literature also reports a wide range of estimates of the percentage of readmissions that may be preventable. One literature review of more than 30 studies found the median proportion of readmissions that may be preventable was 27%, with a range of 5% to 79%.[4] Preventability varied widely across diagnoses. Readmissions were more likely to be preventable in patients with more severe conditions. Therefore, a systematic measure on unplanned readmissions is essential for controlling escalating medical costs; it can identify where readmission rates are unusually high, and help facilities to provide cost-effective healthcare.

Overview of Measure

The SRR is a one-year risk-standardized measure of a facility's 30-day, all-cause rate of unplanned hospital readmissions among Medicare-covered ESRD dialysis patients. The number of expected readmissions is determined by a risk-adjustment model that accounts for the hospital where the index discharge took place, certain patient characteristics (including age, sex, and comorbidities), and the national median expected performance for all dialysis facilities, given the same patient case mix.

We are proposing to adopt the SRR measure currently under review by NQF (NQF #2496). Section 1881(h)(2)(B)(i) of the Act requires that, unless the exception set forth in section 1881(h)(2)(B)(ii) of the Act applies, the measures specified for the ESRD QIP under section 1881(h)(2)(A)(iv) of the Act must have been endorsed by the entity with a contract under section 1890(a) of the Act (that entity currently is NQF). Under the exception set forth in section 1881(h)(2)(B)(ii) of the Act, in the case of a specified area or medical topic determined appropriate by the Secretary for which a feasible and practical measure has not been endorsed by the entity with a contract under section 1890(a) of the Act, the Secretary may specify a measure that is not so endorsed, so long as due consideration is given to measures that have been endorsed or adopted by a consensus organization identified by the Secretary.

We have given due consideration to endorsed measures, as well as those adopted by a consensus organization, and we are proposing this measure under the authority of 1881(h)(2)(B)(ii) of the Act. Although the NQF has endorsed an all-cause hospital readmission measure (NQF #1789), we do not believe it is feasible to adopt this measure in the ESRD QIP because NQF #1789 is specified for use in hospitals, not dialysis facilities. In addition, NQF #1789 is intended to evaluate readmissions across all patient types, whereas the proposed SRR measure is specified for the unique population of ESRD dialysis patients, which have a different risk profile than the general population captured in NQF #1789. Because the proposed SRR measure has been developed specifically for the dialysis-facility setting, and because the measure has the potential to improve clinical practice and decrease healthcare costs, we believe it is appropriate to adopt the SRR in the ESRD QIP at this time.

We have analyzed the measure's reliability, the results of which are provided below and in greater detail in the SRR Measure Methodology report, available at: *http://www.cms.gov/Medicare/Quality-Initiatives-Patient-Assessment-Instruments/ESRDQIP/061_TechnicalSpecifications.html.* The Inter-Unit Reliability (IUR) was calculated for the proposed SRR using data from 2012 and a ''bootstrap'' approach, which uses a resampling scheme to estimate the within-facility variation that cannot be directly estimated by the analysis of variance (ANOVA). The SRRs that we calculated for purposes of this analysis were for dialysis facilities that had at least 11 patients who had been discharged from a hospital during 2012. A small IUR (near 0) reveals that most of the variation of the measures between

[3] United States Renal Data System, USRDS 2013 Annual Data Report: Atlas of Chronic Kidney Disease and End-Stage Renal Disease in the United States, National Institutes of Health, National Institute of Diabetes and Digestive and Kidney Diseases, Bethesda, MD, 2013.

[4] van Walraven C, Bennett C, Jennings A, Austin PC, Forster AJ. Proportion of hospital readmissions deemed avoidable: a systematic review. CMAJ. 2011;183(7):E391–E402.

facilities is driven by ''random noise,'' indicating the measure would not be a reliable characterization of the differences among facilities, whereas a large IUR (near 1) indicates that most of the variation between facilities is due to the real differences between facilities. The IUR for the proposed SRR measure was found to be 0.49, indicating that about one-half of the variation in the SRR can be attributed to between-facility differences, and about half to within-facility variation. This value of IUR indicates that an average-size facility would achieve a moderate degree of reliability for this measure. This level of reliability is consistent with the reliability of other outcome measures in CMS quality-reporting and VBP programs, such as the 30-day Risk-Standardized All-Cause Acute Myocardial Infarction, Heart Failure, and Pneumonia Readmission and Mortality measures used in the Hospital IQR and VBP Programs. We therefore believe that facilities can be reliably scored on the proposed SRR measure.

We convened a technical expert panel (TEP) in May 2012 for the purpose of evaluating this measure, but the TEP did not reach a final consensus and declined to support the measure. Some members of the TEP were concerned that we did not risk-adjust for the nephrologist treating the patients, because actions taken by nephrologists can impact readmission rates. After reviewing the TEP's arguments, we determined that the suggested risk adjustment for nephrologist care would constitute a reversal of CMS policy not to risk adjust for factors related to care for which the provider is responsible. We do not think that it is appropriate to risk-adjust the measure for the nephrologist because the nephrologist is part of the facility's multi-disciplinary team, and medical directors, as employees of the dialysis facilities, are responsible for ensuring that appropriate care is provided by a multi-disciplinary team. The Measures Application Partnership reviewed this measure in February 2013 and supported the direction of the measure, advising CMS that the measure would require additional development prior to implementation. Subsequently, we released draft specifications for the measure to the public for a 30-day comment period and, based on comments received, finalized measure specifications in September 2013. We also, on a voluntary basis, provided individual dialysis facilities with a facility-specific report that calculated their SRR measure results and compared those results to SRR measure results at the state and national level, as well as discharge-level data upon request. Facilities also had an opportunity to submit questions to CMS regarding the measure and their reports. We therefore believe that the proposed SRR measure risk-adjusts appropriately for patient condition and comorbidities at the start of care for which the facility is not responsible. We also believe that the measure is ready for adoption because, as explained above, it achieves a moderate degree of reliability.

Data Sources

The data we will use to calculate the proposed SRR measure come from various CMS-maintained data sources for ESRD patients including the CROWNWeb database, the CMS Annual Facility Survey (Form CMS–2744), Medicare claims, the CMS Medical Evidence Form (Form CMS–2728), transplant data from the Organ Procurement and Transplant Network (OPTN), the Death Notification Form (Form CMS–2746), the Nursing Home Minimum Dataset, and the Social Security Death Master File. These data sources include all Medicare-covered patients with ESRD. Information on hospitalizations is obtained from Medicare Inpatient Claims Standard Analysis Files (SAFs) and past-year comorbidity is obtained from Medicare Claims SAFs (inpatient, outpatient, physician/supplier, home health, hospice, and skilled nursing facility claims).

Outcome

The outcome for this measure is 30-day all-cause, unplanned readmission defined as a hospital readmission for any cause beginning within 30 days of the discharge date of an index discharge, with the exclusion of planned readmissions. This 30-day readmission period is consistent with other publicly reported readmission measures endorsed by NQF and currently implemented in the Hospital Inpatient Quality Reporting Program and Hospital Readmission Reduction Program, and reflects an industry standard.

Cohort

All discharges of Medicare ESRD dialysis patients from an acute care hospital in a calendar year are considered eligible for this measure, with the exception of the exclusions listed in the next section.

Inclusion and Exclusion Criteria

The proposed SRR measure excludes from the measure cohort hospitalizations: (1) Where the patient died during the index hospitalization; (2) where the patient dies within 30 days of the index discharge with no readmission; (3) where the patient is discharged against medical advice; (4) where the patient was admitted with a primary diagnosis of certain conditions related to cancers, mental health conditions, or rehabilitation procedures (because these patients possess radically different risk profiles, and therefore cannot reasonably be compared to other patients discharged from hospitals); (5) where the patient is discharged from a PPS-exempt cancer hospital (because these hospitals care for a unique population of patients that cannot reasonably be compared to the patients admitted to other hospitals); (6) where the patient is transferred to another acute care hospital; and (7) where the patient has already been discharged 12 times during the same calendar year (to respond to concerns raised by the TEP that patients who are hospitalized this frequently during a calendar year could unduly skew the measure rates for small facilities).

Risk Adjustment

The measure adjusts for differences across facilities with regard to their patient case mix. Consistent with NQF guidelines, the model does not adjust for socioeconomic status or race, because risk adjusting for these characteristics would hold facilities with a large proportion of patients who are minorities and/or who have low socioeconomic status to a different standard of care than other facilities. One goal of this measure is to illuminate quality differences that such risk adjustment would obscure. As with the Hospital-Wide Readmission measure employed by the Hospital Readmissions Reduction program, the SRR employs a hierarchical logistic regression model to estimate the expected number of readmissions to an acute care hospital, taking into account the performance of all dialysis facilities, the discharging hospital, and the facility's patient case-mix.

Although the SRR risk-adjustment model is generally aligned with the Hospital-Wide Readmission measure risk-adjustment methodology, we are proposing to modify it to account for comorbidities and patient characteristics relevant to the ESRD population. The proposed SRR measure includes the following patient characteristics as risk adjustors, which are obtained from the following data sources:

Risk adjustor	Data source
Sex	CMS Form 2728.
Age	REMIS database.
Years on ESRD	CMS Form 2728.
Diabetes as cause of ESRD	CMS Form 2728.
BMI at incidence of ESRD	CMS Form 2728.
Days hospitalized during index admission	Part A Medicare Inpatient Claims SAFs.
23 past-year comorbidities (e.g., cardiorespiratory failure/shock; drug and alcohol disorders).	Medicare Claims SAFs: Part A Inpatient, home health, hospice, and skilled nursing facility; and Part B Outpatient.
Discharged with any of 11 high-risk conditions (for example, cystic fibrosis, and hepatitis).	Part A Medicare Inpatient Claims SAFs.

More details on the risk-adjustment calculations, and the rationale for selecting these risk adjustors and not others, can be found at: *http://www.cms.gov/Medicare/Quality-Initiatives-Patient-Assessment-Instruments/ESRDQIP/061_Technical Specifications.html.* We are proposing to risk adjust the proposed SRR measure based on sex, because we have determined that patients' sex affects the measure in ways that are beyond the control of dialysis facilities. We reached this determination by examining the effects of the risk adjusters, both independently and in combination, on rates of unplanned readmissions. This analysis yielded two conclusions. First, the analysis indicated that females are generally more likely than males to experience an unplanned readmission, even when accounting for the other risk adjustors. Second, the disparate effects of gender were substantially impacted by the effects of age: Females aged 15 to 45 were much more likely to experience an unplanned readmission than males of the same age, but this disparity was significantly reduced for men and women younger than 15 and older than 45. Based on these two conclusions, we believe that women in the 15–45 age range face a greater risk of experiencing an unplanned readmission, as compared to men of the same age with similar risk profiles. This does not appear to be a consequence of facility performance, however, because the disparity is not generally applicable to women, but only to a limited age group. We therefore believe it is essential to risk-adjust for sex to ensure that facilities with larger numbers of women aged 15 to 45 are not inappropriately disadvantaged, because not risk-adjusting for sex would potentially incentivize facilities to deny access to these individuals.

As indicated in the table above, the measure is risk-adjusted, in part, based on 23 comorbidities that develop in the year prior to the index hospitalization, as well as 11 high-risk conditions that are present at the time of the index discharge. These data are taken from Medicare claims submitted by hospitals, dialysis facilities, and other types of long-term and post-acute care facilities.

We believe that this proposed approach to risk-adjusting the SRR measure is consistent with NQF guidelines for measure developers. NQF evaluates measures on the basis of four criteria: Importance, scientific acceptability, feasibility, and usability. The validity and reliability of a measure's risk-adjustment calculations fall under the ''scientific acceptability'' criterion, and Measure Evaluation Criterion 2b4 specifies NQF's preferred approach for risk-adjusting outcome measures (*http://www.qualityforum.org/docs/measure_evaluation_criteria.aspx#scientific*). This criterion states that patient comorbidities should only be included in risk-adjustment calculations if they are (1) present at the start of care and (2) not indicative of disparities or deficiencies in the quality of care provided. As indicated in the ''Inclusion and Exclusion Criteria'' subsection above, as well as the measure specifications that are currently under review at NQF, the start of care is defined as the index hospitalization. Accordingly, we believe that NQF Measure Evaluation Criterion 2b4 supports risk adjusting the proposed SRR measure on the basis of patient comorbidity data collected in the year prior to the index hospitalization, because these comorbidities are likely present at the start of care (that is, the date(s) that the patient spends in the hospital during the index hospitalization). For these reasons, we believe that the risk-adjustment methodology for the proposed SRR measure is consistent with NQF guidelines for measure developers and is appropriate for this measure.

Full documentation of the SRR risk-adjustment methodology is available at: *http://www.cms.gov/Medicare/Quality-Initiatives-Patient-Assessment-Instruments/ESRDQIP/061_Technical Specifications.html.*

Calculating the SRR Measure

The SRR measure is calculated as the ratio of the number of observed unplanned readmissions to the number of expected unplanned readmissions. Facilities that have more unplanned readmissions than would be expected for an average facility with a similar case-mix would have a ratio greater than one. Facilities having fewer unplanned readmissions than would be expected for an average facility with a similar case-mix would have a ratio less than one. This ratio calculation is consistent with that employed by one NQF-endorsed outcome measure for ESRD, the Standardized Hospitalization Ratio (NQF #1463).

Hospitalizations are counted as events in the numerator if they meet the definition of unplanned readmission—which is that they (a) occurred within 30 days of the index discharge and (b) are not preceded by a ''planned'' readmission that also occurred within 30 days of the index discharge. Planned readmissions are defined as readmissions that do not bear on the quality of care furnished by the dialysis facility, that occur as a part of ongoing appropriate care of patients, or that involve elective care. Building on the algorithm developed for the Hospital-Wide Readmission measure (NQF #1789), the proposed planned readmission list incorporates minor changes appropriate to the ESRD population as suggested by technical experts. The full planned readmission list and algorithm are available at: *http://www.cms.gov/Medicare/Quality-Initiatives-Patient-Assessment-Instruments/ESRDQIP/061_Technical Specifications.html.* In general, a readmission is considered ''planned'' under two scenarios.

1. The patient undergoes a procedure that is always considered planned (example, bone marrow transplant) or has a primary diagnosis that always indicates the hospitalization is planned (for example, maintenance chemotherapy).

2. The patient undergoes a procedure that *may* be considered planned if it is not accompanied by an acute diagnosis. For example, a hospitalization involving a heart-valve procedure accompanied by

a primary diagnosis of acute myocardial infarction would be considered unplanned, whereas a hospitalization involving a heart-valve procedure accompanied by a primary diagnosis of diabetes would be considered planned (because acute myocardial infarction is a plausible alternative acute indication for hospitalization).

The expected number of readmissions is calculated using hierarchical logistic modeling (HLM). This approach accounts for the hospital from which the patient was discharged and the patient case mix (as defined by factors such as age, sex, and patient comorbidities), as well as the national median performance of all dialysis facilities. The HLM is an appropriate statistical approach to measuring quality based on patient outcomes when patients are clustered within facilities (and therefore the patients' outcomes are not statistically independent), and when the number of qualifying patients for the measure varies from facility to facility. The HLM approach is also currently used to calculate readmission and mortality measures that are used in several quality-reporting and VBP programs by CMS, such as the Heart Failure and Pneumonia Mortality measures in the Hospital IQR and Hospital VBP Programs.

The proposed SRR measure is a point estimate—the best estimate of a facility's readmission rate based on the facility's case mix. For more information on the proposed calculation methodology, please refer to our Web site at: *http://www.cms.gov/Medicare/Quality-Initiatives-Patient-Assessment-Instruments/ESRDQIP/061_Technical Specifications.html.*

Figure 1: Summary of Proposed PY 2017 Measure Set

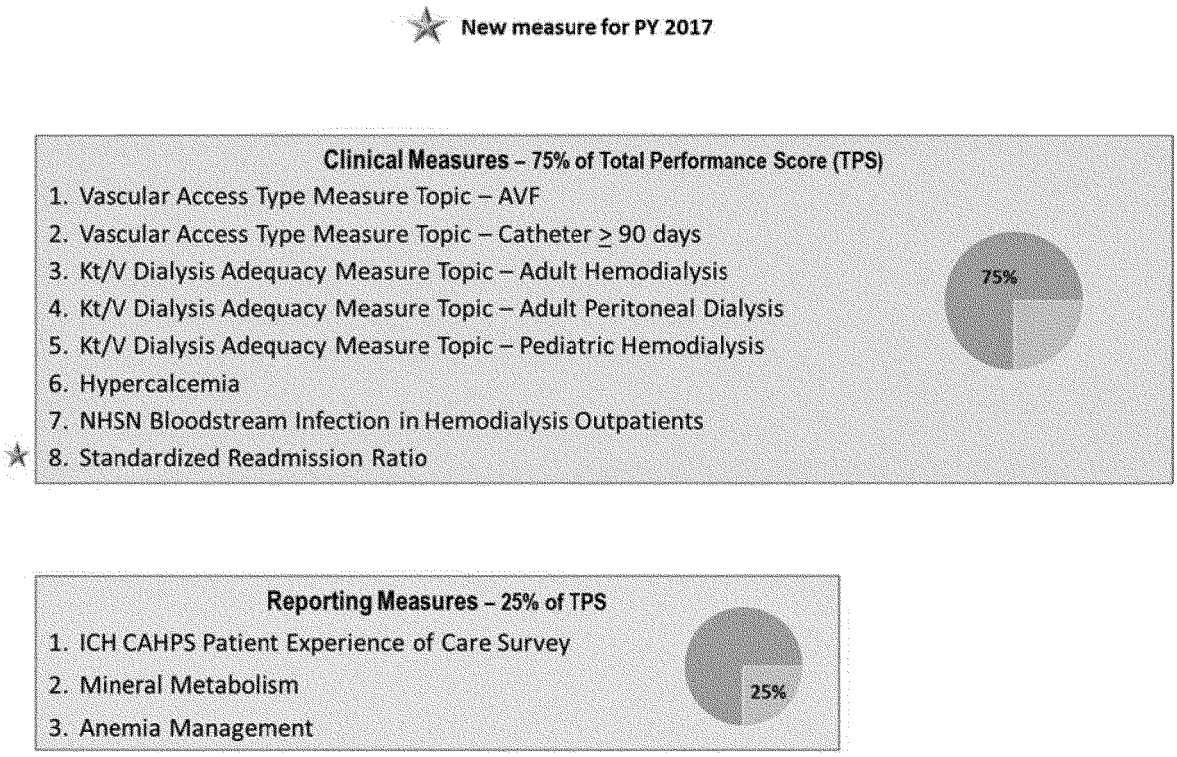

3. Proposed Performance Period for the PY 2017 ESRD QIP

Section 1881(h)(4)(D) of the Act requires the Secretary to establish the performance period with respect to a payment year, and that the performance period occur prior to the beginning of such year. In the CY 2013 ESRD PPS Final Rule (77 FR 67500), we stated our belief that, for most measures, a 12-month performance period is the most appropriate for the program because this period accounts for any potential seasonal variations that might affect a facility's score on some of these measures, and also provides adequate incentive and feedback for facilities and Medicare beneficiaries. CY 2015 is the latest period of time during which we can collect a full 12 months of data and still implement the PY 2017 payment reductions. Therefore, we propose to establish CY 2015 as the performance period for PY 2017 ESRD QIP.

We seek comments on this proposal.

4. Proposed Performance Standards, Achievement Thresholds, and Benchmarks for the PY 2017 ESRD QIP

We are proposing to adopt performance standards for the PY 2017 ESRD QIP measures similar to those we finalized for PY 2016 (78 FR 72211 through 72213). Section 1881(h)(4)(A) of the Act provides that ''the Secretary shall establish performance standards with respect to measures selected . . . for a performance period with respect to a year.'' Section 1881(h)(4)(B) of the Act further provides that the ''performance standards . . . shall include levels of achievement and improvement, as determined appropriate by the Secretary.'' We use the performance standards to establish the minimum score a facility must achieve to avoid a Medicare payment reduction. We use achievement thresholds and benchmarks to calculate scores on the clinical measures.

a. Proposed Performance Standards, Achievement Thresholds, and Benchmarks for the Clinical Measures in the PY 2017 ESRD QIP

With the exception of the NHSN Bloodstream Infection clinical measure, we propose to set the performance standards, achievement thresholds, and benchmarks for the PY 2017 clinical measures at the 50th, 15th, and 90th percentile, respectively, of national performance in CY 2013, because this will give us enough time to calculate and assign numerical values to the proposed performance standards for the PY 2017 program prior to the beginning of the performance period. We continue to believe that these standards will provide an incentive for facilities to continuously improve their performance, while not reducing incentives to facilities that score at or above the national performance rate for the clinical measures. As stated in the CY 2014 ESRD PPS Final Rule (78 FR 72213 through 72215), CY 2014 is the first year for which we will have data for the NHSN Bloodstream Infection clinical measure. Accordingly, we propose to set the performance standard, achievement threshold, and benchmark for the NHSN Bloodstream Infection clinical measure based on the 50th, 15th, and 90th percentiles, respectively, of national performance in CY 2014.

We seek comments on these proposals.

b. Estimated Performance Standards, Achievement Thresholds, and Benchmarks for the Clinical Measures Proposed for the PY 2017 ESRD QIP

At this time, we do not have the necessary data to assign numerical values to the proposed performance standards, achievement thresholds, and benchmarks for the clinical measures, because we do not yet have complete data from CY 2013. Nevertheless, we are able to estimate these numerical values based on the most recent data available. For all of the proposed clinical measures except the proposed SRR measure, this partial data comes from the period of January through December 2013. For the proposed SRR measure, this partial data comes from the period of January through December 2012. In Table 25, we have provided the estimated numerical values for all of the proposed PY 2017 ESRD QIP clinical measures except the NHSN Bloodstream Infection clinical measure. We will publish updated values for the clinical measures, using data from the first part of CY 2014, in the CY 2015 ESRD PPS final rule.

TABLE 25—ESTIMATED NUMERICAL VALUES FOR THE PERFORMANCE STANDARDS FOR THE PY 2017 ESRD QIP CLINICAL MEASURES USING THE MOST RECENTLY AVAILABLE DATA

Measure	Performance standard	Achievement threshold	Benchmark
Vascular Access Type:			
%Fistula	64.49%	52.43%	78.64%
%Catheter	9.9%	18.36%	3.21%
Kt/V:			
Adult Hemodialysis	93.65%	86.97%	97.55%
Adult Peritoneal Dialysis	87.50%	70.42%	95.74%
Pediatric Hemodialysis	92.48%	79.55%	97.98%
Hypercalcemia	1.32%	4.78%	0.00%
NHSN Bloodstream Infection	50th percentile of eligible facilities' performance during CY 2014.	15th percentile of eligible facilities' performance during CY 2014.	90th percentile of eligible facilities' performance during CY 2014.
Standardized Readmission Ratio	0.996	1.242	0.658

We believe that the ESRD QIP should not have lower performance standards than in previous years. In accordance with our statements in the CY 2012 ESRD PPS final rule (76 FR 70273), if the final numerical value for a performance standard, achievement threshold, and/or benchmark is worse than it was for that measure in the PY 2016 ESRD QIP, then we propose to substitute the PY 2016 performance standard, achievement threshold, and/or benchmark for that measure.

We seek comments on this proposal.

c. Proposed Performance Standards for the PY 2017 Reporting Measures

In the CY 2014 ESRD PPS Final Rule, we finalized performance standards for the Anemia Management, Mineral Metabolism, and ICH CAHPS reporting measures (78 FR 72213). We are proposing to continue to use these performance standards for these measures in the PY 2017 ESRD QIP. We seek comments on this proposal.

5. Proposal for Scoring the PY 2017 ESRD QIP Measures

a. Scoring Facility Performance on Clinical Measures Based on Achievement

In the CY 2014 ESRD PPS Final Rule, we finalized a policy for scoring performance on clinical measures based on achievement (78 FR 72215). In determining a facility's achievement score for each measure under the PY 2017 ESRD QIP, we propose to continue using this methodology for all clinical measures. Under this methodology, facilities receive points along an achievement range based on their performance during the proposed performance period for each measure, which we define as a scale between the achievement threshold and the benchmark.

b. Scoring Facility Performance on Clinical Measures Based on Improvement

In the CY 2014 ESRD PPS Final Rule, we finalized a policy for scoring performance on clinical measures based on improvement (78 FR 72215 through 72216). In determining a facility's improvement score for each measure under the PY 2017 ESRD QIP, we propose to continue using this methodology for all clinical measures. Under this methodology, facilities receive points along an improvement range, defined as a scale running between the improvement threshold and the benchmark. We propose to define the improvement threshold as the facility's performance on the measure during CY 2014. The facility's improvement score would be calculated by comparing its performance on the measure during CY 2015 (the proposed performance period) to its performance rate on the measure during CY 2014.

6. Weighting the Total Performance Score

We continue to believe that while the reporting measures are valuable, the clinical measures evaluate actual patient care and therefore justify a higher

combined weight (78 FR 72217). We are therefore not proposing to change our policy, finalized most recently in the CY 2014 ESRD PPS (78 FR 72217), to weight clinical measures as 75 percent and reporting measures as 25 percent of the TPS. We are also not proposing any changes to the policy that facilities must be eligible to receive a score on at least one reporting measure and at least one clinical measure to be eligible to receive a TPS, or the policy that a facility's TPS will be rounded to the nearest integer, with half of an integer being rounded up.

7. Proposed Minimum Data for Scoring Measures for the PY 2017 ESRD QIP and Proposal for Changing Attestation Process for Patient Minimums

For the same reasons described in the CY 2013 ESRD PPS final rule (77 FR 67510 through 67512), for PY 2017 we propose to only score facilities on clinical and reporting measures for which they have a minimum number of qualifying patients during the performance period. Our current policy is that a facility must treat at least 11 qualifying patients during the performance period in order to be scored on a clinical measure (77 FR 67510 through 67511). We are not proposing any changes to this policy.

However, with respect to the proposed SRR measure, we propose that facilities with fewer than 11 index discharges will not be eligible to receive a score on that measure. We considered proposing to adopt the 11 qualifying patient minimum that we use for the other clinical measures. We decided, however, to base facility eligibility for the measure on the number of index discharges attributed to a facility, because the measure calculations are determined by the number of index discharges, adjusted for patient case-mix. We decided to set the minimum number of index discharges at 11 because this is consistent with reporting for the proposed SRR measure during the dry run conducted earlier this year, as well as with the implementation of outcome measures in the Hospital Readmission Reduction Program, which base case minimums on the number of index discharges attributable to the facility.

Additionally, for the proposed SRR measure, we propose to apply the small-facility adjuster to facilities that treat 41 or fewer index discharges because we determined that this was the minimum number of index discharges needed to achieve an IUR of 0.4 (that is, moderate reliability) for the proposed SRR measure. Because the small-facility adjuster gives facilities the benefit of the doubt when measure scores can be unduly influenced by a few outlier patients, we believe that setting the threshold at 41 index discharges will not unduly penalize facilities that treat small numbers of patients.

In the CY 2014 ESRD PPS Final Rule, we finalized that the case minimum for the Mineral Metabolism and Anemia Management reporting measures is one, and that facilities that treat one qualifying patient could attest to this in CROWNWeb in order to avoid being scored on the measures (78 FR 72197 through 72199 and 72220 through 72221). In the process of responding to questions from facilities about the attestation requirements for the PY 2015 program, however, we found that facilities were confused by this requirement. For this reason, we propose to remove the option for facilities to attest that they did not meet the case minimum for these measures. Accordingly, facilities that meet the case minimum of one qualifying patient would be scored on these measures, facilities with between 2 and 11 qualifying patients would be required to report data for all but one qualifying patient, and facilities with 11 or more qualifying patients would be required to report data for all patients. Due to facility confusion with the attestation process, we also propose to remove the option for facilities to attest that they did not meet the case minimum for the ICH CAHPS survey reporting measure. As we stated above, we are not proposing any further changes to the 30 survey-eligible case minimum for this measure. We are proposing that the ESRD QIP program will determine facility eligibility for these measures based on available data submitted to CROWNWeb, in Medicare claims, and to other CMS administrative data sources.

We seek comments on this proposal.

We are proposing to continue our policies that govern when a newly opened facility would be eligible to be scored on measures as follows.

- Facilities with a CCN open date on or after July 1 of the performance period (for PY 2017, this would be July 1, 2015) are not eligible to be scored on any reporting measures except the ICH CAHPS reporting measure.
- Facilities with a CCN open date on or after January 1 of the performance period (for PY 2017, this would be January 1, 2015) are not eligible to receive a score on the ICH CAHPS reporting measure in the PY 2017 program, due to the time it takes to contract with a CMS-approved third-party vendor to administer the survey.
- Facilities are eligible to receive a score on all of the clinical measures except the NHSN Bloodstream Infection clinical measure if they have a CCN open date at any time before the end of the performance period.
- Facilities with a CCN open date after January 1 of the performance period (for PY 2017, this would be January 1, 2015) are not eligible to receive a score on the NHSN Bloodstream Infection clinical measure, due to the need to collect 12 months of data to accurately score the measure.

We are also proposing to continue our policy that a facility will not receive a TPS unless it receives a score on at least one clinical measure and at least one reporting measure. We note that as a result, facilities will not be eligible for a payment reduction under the PY 2017 ESRD QIP if they have a CCN open date on or after July 1, 2015.

We seek comments on these proposals.

Table 26 displays the proposed patient minimum requirements for each of the reporting measures, as well as the CCN open dates after which a facility will not be eligible to receive a score on a reporting measure.

TABLE 26—PROPOSED MINIMUM DATA REQUIREMENTS FOR THE PY 2017 ESRD QIP

Measure	Minimum data requirements	CCN Open date	Small facility adjuster
Adult Hemodialysis Adequacy (Clinical).	11 qualifying patients	N/A	11–25 patients.
Adult Peritoneal Dialysis Adequacy (Clinical).	11 qualifying patients	N/A	11–25 patients.
Pediatric Hemodialysis Adequacy (Clinical).	11 qualifying patients	N/A	11–25 patients.

TABLE 26—PROPOSED MINIMUM DATA REQUIREMENTS FOR THE PY 2017 ESRD QIP—Continued

Measure	Minimum data requirements	CCN Open date	Small facility adjuster
Vascular Access Type: Catheter (Clinical).	11 qualifying patients	N/A	11–25 patients.
Vascular Access Type: Fistula (Clinical).	11 qualifying patients	N/A	11–25 patients.
Hypercalcemia (Clinical)	11 qualifying patients	N/A	11–25 patients.
NHSN Bloodstream Infection (Clinical).	11 qualifying patients	On or before January 1, 2015.	11–25 patients.
SRR (Clinical)	11 index discharges	N/A	11–41 index discharges.
ICH CAHPS (Reporting)	Facilities with 30 or more survey-eligible patients during the calendar year preceding the performance period must submit survey results. Facilities will not receive a score if they do not obtain a total of at least 30 completed surveys during the performance period.	Before January 1, 2015	N/A.
Anemia Management (Reporting).	Facilities with 11 or more qualifying patients must report data for all patients. Facilities with between 2 and 11 qualifying patients must report data on all but 1 qualifying patient. Facilities with 1 qualifying patient must report for that patient.	Before July 1, 2015	N/A.
Mineral Metabolism (Reporting).	Facilities with 11 or more qualifying patients must report data for all patients. Facilities with between 2 and 11 qualifying patients must report data on all but 1 qualifying patient. Facilities with 1 qualifying patient must report for that patient.	Before July 1, 2015	N/A.

8. Proposed Payment Reductions for the PY 2017 ESRD QIP

Section 1881(h)(3)(A)(ii) of the Act requires the Secretary to ensure that the application of the scoring methodology results in an appropriate distribution of payment reductions across facilities, such that facilities achieving the lowest TPSs receive the largest payment reductions. For PY 2017, we are proposing that a facility will not receive a payment reduction if it achieves a minimum TPS that is equal to or greater than the total of the points it would have received if:

- It performed at the performance standard for each clinical measure;
- It received zero points for each clinical measure that does not have a numerical value for the performance standard established through the rulemaking process before the beginning of the PY 2017 performance period; and
- It received 10 points (which is the 50th percentile of facility performance on the PY 2015 reporting measures) for each reporting measure.

We recognize that these conditions are more stringent than the conditions used to establish the minimum TPS in the PY 2016 ESRD QIP, because this proposal increases the number of points a facility would have to receive on each reporting measure from 5 to 10. The PY 2015 program is the most recent year for which we will have calculated final measure scores before the beginning of the proposed performance period for PY 2017 (i.e., CY 2015). We note that facility performance on the Anemia Management, Mineral Metabolism, NHSN Dialysis Event, and ICH CAHPS reporting measures in the PY 2015 program is so high that the median score on each of the measures was 10 points. We are proposing to increase the number of points a facility would have to achieve for each reporting measure to the 50th percentile of facility performance on the PY 2015 reporting measures (i.e., the average of the median scores for each reporting measure), because a score of 5 on each of these reporting measures is indicative of a below-average performance, and we want to incentivize facilities to provide above-average care.

We seek comments on this proposal.

Section 1881(h)(3)(A)(ii) of the Act requires that facilities achieving the lowest TPSs receive the largest payment reductions. In the CY 2014 ESRD PPS Final Rule (78 FR 72223 through 72224), we finalized a payment reduction scale for PY 2016 and future payment years, such that for every 10 points a facility falls below the minimum TPS, the facility would receive an additional 0.5 percent reduction on its ESRD PPS payments, with a maximum reduction of 2.0 percent. We are not proposing any changes to this policy at this time.

Because we are not yet able to calculate the performance standards for each of the clinical measures, we are likewise not able to calculate the minimum TPS at this time. Based on the estimated performance standards listed above, we estimate that a facility must meet or exceed a minimum TPS of 58 for PY 2017. For all of the clinical measures except the NHSN Bloodstream Infection clinical measure, these data come from CY 2013. For the NHSN Bloodstream Infection clinical measure, we set the performance standard to zero for purposes of this estimate, because we are not able to establish a numerical value for the performance standard through the rulemaking process before the beginning of the PY 2017 performance period. We are proposing that facilities failing to meet the minimum TPS, as established in the CY 2015 ESRD PPS Final Rule, will receive payment reductions based on the estimated TPS ranges indicated in Table 27 below.

TABLE 27—ESTIMATED PAYMENT REDUCTION SCALE FOR PY 2017 BASED ON THE MOST RECENTLY AVAILABLE DATA FROM CY 2013

Total performance score	Reduction (%)
100—58	0
57—48	0.5
47—38	1.0
37—28	1.5
27—0	2.0

9. Proposal for Data Validation

One of the critical elements of the ESRD QIP's success is ensuring that the data submitted to calculate measure scores and TPSs are accurate. We began a pilot data-validation program in CY 2013 for the ESRD QIP, and we have

procured the services of a data-validation contractor that is tasked with validating a national sample of facilities' records as they report CY 2014 data to CROWNWeb. Our first priority was to develop a methodology for validating data submitted to CROWNWeb under the pilot data-validation program, and this continues to be our goal. Once this methodology has been fully developed, we will propose to adopt it through the rulemaking process. For the PY 2016 ESRD QIP (78 FR 72223 through 72224), we finalized a requirement to sample approximately 10 records from 300 randomly selected facilities; these facilities will have 60 days to comply once they receive requests for records. We are proposing to continue this pilot for the PY 2017 ESRD QIP. Under this continued validation study, we will sample the same number of records (approximately 10 per facility) from the same number of facilities (that is, 300) during CY 2015. If a facility is randomly selected to participate in the pilot validation study but does not provide CMS with the requisite medical records within 60 days of receiving a request, then we propose to deduct 10 points from the facility's TPS. Once we have developed and adopted a methodology for validating the CROWNWeb data, we intend to consider whether payment reductions under the ESRD QIP should be based, in part, on whether a facility has met our standards for data validation.

We seek comments on this proposal.

We are also proposing a feasibility study for validating data reported to CDC's NHSN Dialysis Event Module for the NHSN Bloodstream Infection clinical measure. HAIs are relatively rare, and we are proposing that the feasibility study would target records with a higher probability of including a dialysis event, because this would enrich the validation sample while reducing the burden on facilities. The methodology for this proposed feasibility study would resemble the methodology used by the Hospital Inpatient Quality Reporting Program to validate the central line-associated bloodstream infection measure, the catheter-associated urinary tract infection measure, and the surgical site infection measure (77 FR 53539 through 535553).

Specifically, we propose to randomly select nine facilities to participate in the feasibility study. A CMS contractor will send these facilities quarterly requests for lists of all positive blood cultures drawn from its patients during the quarter, including any positive blood cultures that were collected from the facility's patients on the day of, or the day following, their admission to a hospital. Facilities will have 60 days to respond to quarterly requests for lists of positive blood cultures. A CMS contractor will then develop a methodology for determining when a positive blood culture qualifies as a ''candidate dialysis event,'' and is therefore appropriate for further validation. Once the contractor determines a methodology for identifying candidate dialysis events, the contractor will analyze the records of patients who had a positive blood culture in order to determine if the facility reported dialysis events for those patients in accordance with the NHSN Dialysis Event Protocol. If the contractor determines that additional medical records are needed from a facility to validate whether the facility accurately reported the dialysis events, then the contractor will send a request for additional information to the facility, and the facility will have 60 days from the date of the letter to respond to the request. Overall, we estimate that, on average, quarterly lists will include two positive blood cultures per facility, but we recognize these estimates may vary considerably from facility to facility. If a facility is randomly selected to participate in the feasibility study but does not provide CMS with the requisite lists of positive blood cultures or the requisite medical records within 60 days of receiving a request, then we propose to deduct 10 points from the facility's TPS.

The goals of the proposed feasibility study will be five-fold: (1) To estimate the burden and associated costs to facilities of validating the NHSN Bloodstream Infection clinical measure; (2) to assess the costs to CMS to validate this measure; (3) to develop a methodology for identifying candidate dialysis events from lists of positive blood cultures; (4) to develop a methodology for determining whether a facility accurately reported dialysis events under the NHSN Bloodstream Infection clinical measure; and (5) to reach some preliminary conclusions about whether facilities are accurately reporting data under the NHSN Bloodstream Infection clinical measure. Based on the results of this study, we will consider the feasibility of proposing in future rulemaking to validate the NHSN Bloodstream Infection clinical measure for all facilities.

We seek comments on this proposal.

10. Proposal To Monitor Access to Dialysis Facilities

Public comments on the proposal to adopt the Standardized Hospitalization Ratio measure in the PY 2014 ESRD QIP (76 FR 70267) expressed concerns that ''the measure may lead to 'cherry-picking' of patients based on their risk of hospitalizations, causing access to care issues for patients with more severe illness.'' We share commenters' concerns about the SHR measure, and we believe that these concerns equally apply to other outcome measures proposed for the ESRD QIP. We recognize that, in general, inadequate risk adjustment in outcome measure calculations can create an incentive for facilities to deny services to sicker patients, because these patients' illnesses would not be properly accounted for in the risk-adjustment calculations. We believe that outcome measures proposed and adopted for the ESRD QIP properly risk adjust for patients with severe illnesses, but we remain concerned that misperceptions to the contrary might negatively impact access to dialysis therapy.

Since we are proposing to adopt the SRR clinical measure for the PY 2017 program, and below we are proposing to adopt the STrR clinical measure for the PY 2018 program, we propose to initiate a monitoring program focused on access to dialysis therapy. This program would compare dialysis data before and after the adoption of an outcome measure, looking for changes in admission and discharge practices, as well as changes in rates and patterns of involuntary discharges. Specifically, this program would assess and analyze the characteristics of beneficiaries admitted to dialysis centers (stratified by location, size, and setting) in order to determine when and if selective admission and discharge practices are coupled with negative patient attributes and trends over time. We believe this program will enable us to identify patterns that are indicative of diminished access to dialysis therapy.

We seek comments on this proposal.

11. Proposed Extraordinary Circumstances Exception

Many comments on the CY 2014 ESRD PPS proposed rule included the recommendation to exempt a facility from all the requirements of the ESRD QIP clinical and reporting measures during the time the facility was forced to close temporarily due to a natural disaster or other extraordinary circumstances. In response to these comments, we agreed that ''there are times when facilities are unable to submit required quality data due to extraordinary circumstances that are not within their control, and we do not wish to penalize facilities for such circumstances or unduly increase their

burden during these times'' (78 FR 72209).

Section 1881(h)(3)(A)(i) of the Act states, ''[T]he Secretary shall develop a methodology for assessing the total performance of each provider of services and renal dialysis facility based on performance standards with respect to the measures selected under paragraph (2) for a performance period established under paragraph (4)(D).'' Given the possibility that facilities could be unfairly penalized for circumstances that are beyond their control, we believe the best way to implement an extraordinary circumstances exception is under the authority of this section. We are therefore proposing to interpret section 1881(h)(3)(A)(i) of the Act to enable us to configure the methodology for assessing facilities' total performance such that we will not require a facility to submit, nor penalize a facility for failing to submit, data on any ESRD QIP quality measure data from any month in which a facility is granted an extraordinary circumstances exception.

Under this policy, we propose that, in the event of extraordinary circumstances not within the control of the facility (such as a natural disaster), for the facility to receive consideration for an exception from all ESRD QIP requirements during the period in which the facility was closed, the facility would need to submit a CMS Disaster Extension/Exception Request Form through *www.qualitynet.org* within 90 calendar days of the date of the disaster or extraordinary circumstance. We are proposing that the facility would need to provide the following information on the form:

- Facility CCN;
- Facility name;
- CEO name and contact information;
- Additional contact name and contact information;
- Reason for requesting an exception;
- Dates affected;
- Date facility will start submitting data again, with justification for this date; and
- Evidence of the impact of the extraordinary circumstances, including but not limited to photographs, newspaper, and other media articles.

Incomplete forms will be returned to the facility without further review of their content. We will evaluate the request and provide the facility with a response. If we determine that the facility was, in fact, closed for a period of time due to extraordinary circumstances, then we will exempt the facility from the ESRD QIP requirements for any month during which the facility was closed due to the extraordinary circumstances. As such, a facility granted a temporary exception will be scored on each measure only for the months during a performance period not covered by the exception. For example, if a facility is granted an extraordinary circumstances exception for the time period between January 15 and February 15, 2015, then the facility will not be required to report, and will not be penalized for not reporting, data on any ESRD QIP measure data for January and February of CY 2015. The effect of this proposal is that if a facility, because it has been granted an exception, cannot meet the reporting requirements that apply to a measure, the facility will not receive a score on the measure. For example, if a facility is granted an extraordinary circumstances exception for February 2015, then that facility would not be scored on the NHSN Bloodstream Infection clinical measure for the applicable payment year, because this measure requires facilities to submit 12 months of data in order to avoid receiving zero points on the measure.

This policy does not preclude us from granting exceptions to facilities that have not requested them when we determine that an extraordinary circumstance (for example, a hurricane or other act of nature) affects an entire region or locale. If we make the determination to grant an exception to facilities in a region or locale, then we propose to communicate this decision through routine communication channels to facilities, vendors, and Networks, including but not limited to issuing memoranda, emails, and notices on a CMS-approved Web site.

We seek comments on this proposal.

G. Proposed Requirements for the PY 2018 ESRD QIP

1. Proposal To Modify the Mineral Metabolism Reporting Measure Beginning in PY 2018

In the CY 2013 ESRD QIP, we adopted a reporting measure focused on mineral metabolism, which was based in part on NQF #0255 (77 FR 67487 through 67487). In the CY 2014 ESRD PPS, we finalized two revisions to the Mineral Metabolism reporting measure: (1) To include home peritoneal dialysis patients in the measure; and (2) to remove serum calcium reporting from the measure because of its reporting under the Hypercalcemia clinical measure (78 FR 72197 through 72198). Accordingly, in order to meet the requirements for the Mineral Metabolism reporting measure, facilities currently must report serum phosphorus values for each qualifying patient treated at the facility on a monthly basis.

Since the publication of the CY 2014 ESRD PPS final rule, members of the renal community requested an ad hoc NQF review of measure #0255, focusing in particular on whether the measure should be updated to allow for the reporting of plasma phosphorus data. The NQF Consensus Standards Approval Committee (CSAC) reviewed the measure and recommended that the phosphorus reporting measure (NQF #0255) be modified to allow for the reporting of plasma phosphorus data as an alternative to serum phosphorus data. Although our TEP reviewed this issue and concluded that measure #0255 should remain unchanged, we concur with the CSAC's recommendation due to the CSAC's ad hoc review of lab data demonstrating the equivalency of plasma and serum measurements of phosphorus, as well as an additional concurrent internal review of the data by CMS and our measure development contractor. We are in agreement with the CSAC that readings of phosphorus using either plasma or serum are appropriate for the measure. As the measure developer for NQF #255, we are also in the process of revising the specifications for that measure and plan to submit the revised measure specifications to the NQF for endorsement. We believe the change to these specifications is non-substantive because plasma readings are an alternative method of reporting on phosphorus data and, as we state above, are roughly equivalent to serum phosphorus readings.

We considered proposing to allow facilities to report plasma phosphorus data for the Mineral Metabolism reporting measure in the PY 2017 program, but we have determined that it is not operationally feasible to configure the relevant data fields in CROWNWeb to accept plasma phosphorus readings prior to January 1, 2015, the beginning of the performance period for that program year. For this reason, we propose to modify the measure specifications for the Mineral Metabolism reporting measure to allow facilities to report either serum phosphorus data or plasma phosphorus data, beginning with the PY 2018 program. We further clarify that we are not proposing any other changes to the measure specifications for the Mineral Metabolism reporting measure.

2. Proposed New Measures for the PY 2018 ESRD QIP and Future Payment Years

For the PY 2018 ESRD QIP, we are proposing to continue to use all of the

measures proposed for the PY 2017 ESRD QIP, with the exception of the ICH CAHPS reporting measure, which we are proposing to convert to a clinical measure. We are also proposing to adopt five new measures. The proposed new measures include one new outcome measure evaluating transfusions in the ESRD population, one measure on pediatric peritoneal dialysis adequacy, one measure on pain assessment, one measure on clinical depression screening, and one measure on healthcare personnel influenza vaccination (see Table 28).

TABLE 28—NEW MEASURES PROPOSED FOR THE PY 2018 ESRD QIP

NQF#	Measure title
N/A	Pediatric Peritoneal Dialysis Adequacy, a clinical measure. Percentage of pediatric peritoneal dialysis patient-months with spKt/V greater than or equal to 1.8 (dialytic + residual).
0258	In-Center Hemodialysis Consumer Assessment of Providers and Systems Survey,[1] a clinical measure. Proportion of responses to rating items grouped into three composite measures and three global ratings.
N/A	Standardized Transfusion Ratio, a clinical measure. Risk-adjusted standardized transfusion ratio for dialysis facility patients.
N/A[2]	Pain Assessment and Follow-Up, a reporting measure. Percentage of adult patients with documentation of pain assessment through discussion with the patient including the use of a standardized tool(s) on each visit and documentation of a follow-up place when pain is present.
N/A[3]	Depression Screening and Follow-Up, a reporting measure. Percentage of adult patients screened for clinical depression using a standardized tool and follow-up plan is documented.
N/A[4]	NHSN Healthcare Personnel Influenza Vaccination, a reporting measure.

[1] The proposed dimensions of the ICH CAHPS survey for use in the PY 2018 ESRD QIP are: Nephrologists' Communication and Caring, Quality of Dialysis Center Care and Operations, Providing Information to Patients, Overall Rating of the Nephrologists, Overall Rating of the Dialysis Center Staff, and Overall Rating of the Dialysis Facility.
[2] We note that the NQF has previously endorsed a pain measure (NQF #0420) upon which this measure is based.
[3] We note that the NQF has previously endorsed a depression measure (NQF #0418) upon which this measure is based.
[4] We note that the NQF has previously endorsed a vaccination measure (NQF #0431) upon which this measure is based.

a. Proposed Standardized Transfusion Ratio (STrR) Clinical Measure

Background

We are concerned that the inclusion of erythropoiesis-stimulating agents (ESAs) in the ESRD PPS and the removal of the Hemoglobin Less than 10 g/dL clinical measure from the ESRD QIP measure set could result in the underutilization of ESAs to manage anemia in ESRD patients, with the result that these patients have lower achieved hemoglobin levels and more frequently need red-blood-cell transfusions.

In addition, patients with ESRD who are eligible to receive a kidney transplant and are transfused risk becoming sensitized to the donor pool, thereby making it less likely that a transplant will be successful. Blood transfusions also carry a small risk of transmitting blood-borne infections to the patient, and the patient could additionally develop a transfusion reaction. Furthermore, using infusion centers or hospitals to transfuse patients is expensive, inconvenient, and could compromise future vascular access.

Overview of Measure

The Standardized Transfusion Ratio (STrR) for all adult Medicare ESRD patients is a ratio of the number of observed eligible blood transfusion events occurring in patients dialyzing at a facility to the number of eligible transfusions that would be expected from a predictive model that accounts for patient characteristics within each facility. Eligible transfusions are those that do not have any claims pertaining to the comorbidities identified for exclusion in the 12 months immediately prior to the transfusion date.

We plan to submit the STrR measure to NQF for review at the next available call for measures. Section 1881(h)(2)(B)(i) of the Act requires that, unless the exception set forth in section 1881(h)(2)(B)(ii) of the Act applies, the measures specified for the ESRD QIP under section 1881(h)(2)(A)(iv) of the Act must have been endorsed by the entity with a contract under section 1890(a) of the Act (which is currently NQF). Under the exception set forth in section 1881(h)(2)(B)(ii) of the Act, in the case of a specified area or medical topic determined appropriate by the Secretary for which a feasible and practical measure has not been endorsed by the entity with a contract under section 1890(a) of the Act, the Secretary may specify a measure that is not so endorsed, so long as due consideration is given to measures that have been endorsed or adopted by a consensus organization identified by the Secretary.

We have given due consideration to endorsed measures, as well as those adopted by a consensus organization, and we are proposing this measure under the authority of 1881(h)(2)(B)(ii) of the Act. NQF has not endorsed and a consensus organization has not adopted a measure on transfusions. Because the proposed STrR measure has the potential to decrease transfusions resulting from underutilization of anemia medications, we believe it is appropriate to adopt the STrR in the PY 2018 ESRD QIP. We considered proposing to adopt the measure for the PY 2017, but we recognized that this is a new measure, and wanted to give facilities more time to familiarize themselves with it. The Measure Application Partnership, in its February 1, 2013 Pre-Rulemaking Report, supported the direction of the measure, stating that it ''addresses an important concept, but the establishment of guidelines for hemoglobin range is needed.'' We have received public comments and input from a TEP that we convened on a prototype STrR measure, and finalized development of the proposed STrR measure in September 2013. The resulting measure specifications did not include hemoglobin thresholds, as no input from the TEP or public comments supported moving forward with thresholds included in the measure. We therefore believe these efforts meet the requirements for further development of the STrR prior to implementation in the ESRD QIP.

In the process of preparing to submit the measure for NQF review, we conducted analyses on the reliability of the STrR measure. The full analysis is available at: *http://www.cms.gov/Medicare/Quality-Initiatives-Patient-Assessment-Instruments/ESRDQIP/061_TechnicalSpecifications.html.* The STrR is not a simple average; instead, we estimate the IUR using a bootstrap approach, which uses a resampling

scheme to estimate the within facility variation that cannot be directly estimated by ANOVA. A small IUR (near 0) reveals that most of the variation of the measures between facilities is driven by ''random noise,'' indicating the measure would not be a reliable characterization of the differences among facilities, whereas a large IUR (near 1) indicates that most of the variation between facilities is due to the real difference between facilities. We have determined that the average IUR for the STrR measure is 0.54, meaning that about half of the variation in the measure can be attributed to between-facility differences, and about half to within-facility variation. This value of IUR indicates a moderate degree of reliability and is consistent with the reliability of other outcome measures in CMS quality reporting and VBP programs. We therefore believe that facilities can be reliably scored on the proposed STrR measure.

Data Sources

Data for the measure come from various CMS-maintained data sources for ESRD patients including Program Medical Management and Information System (PMMIS/REMIS), Medicare claims, the CROWNWeb database, the CMS Annual Facility Survey (Form CMS–2744), Medicare dialysis and hospital payment records, the CMS Medical Evidence Form (Form CMS–2728), transplant data from the OPTN, the Death Notification Form (Form CMS–2746), the Nursing Home Minimum Dataset, and the Social Security Death Master File. These data sources include all Medicare patients. Information on transfusions is obtained from Medicare Inpatient and Outpatient Claims SAFs.

Outcome

The outcome of interest for the STrR is blood transfusion events (defined as the transfer of one or more units of blood or blood products into the recipient's blood stream) among Medicare ESRD patients dialyzing at the facility during the inclusion time periods.

Cohort

The cohort for the STrR includes all adult Medicare ESRD dialysis patients who have been documented as having had ESRD for at least 90 days.

Inclusion and Exclusion Criteria

Patients will not be included in the STrR during the first 90 days of ESRD dialysis treatment. Starting with day 91 after onset of ESRD, a patient is attributed to a facility once he or she has been receiving dialysis there for 60 days. When a patient transfers from one facility to another, we are proposing that the patient would continue to be attributed to the original facility for 60 days from the date of the transfer. Starting on day 61, the patient would be attributed to the transferee facility. Patients would be excluded from the measure for three days prior to the date they receive a transplant to avoid including transfusions associated with the transplant hospitalization.

We are also proposing to require that patients reach a certain level of Medicare-paid dialysis bills to be included in the STrR, or that patients have Medicare-paid inpatient claims during the period. This requirement is intended to assure completeness of transfusion information for all patients included in the measure calculation by excluding non-Medicare patients and patients for whom Medicare is a secondary payer, because they are not expected to have complete information on transfusion available in the claims data. For each patient, a month is included as a month at risk for transfusion if that month in the period is considered ''eligible.'' A month is considered eligible if it is within two months of a month in which a patient has $900 of Medicare-paid claims or at least one Medicare-paid inpatient claim. The $900 amount represents approximately the tenth percentile of monthly dialysis claims per patient.

In addition, a transfusion event is eligible for inclusion in the STrR measure if the patient did not present with certain comorbid conditions during the 12 month period immediately prior to the date of the transfusion event. We are proposing to exclude these transfusion events because the identified comorbid conditions are associated with a higher risk of transfusion and require different anemia management practices that the measure is not intended to address. Specifically, we are proposing that a transfusion event will be excluded from the measure if the patient, during the 12 month look back period, had a Medicare claim for: hemolytic and aplastic anemia; solid organ cancer (breast, prostate, lung, digestive tract and others); lymphoma; carcinoma in situ; coagulation disorders; multiple myeloma; myelodysplastic syndrome and myelofibrosis; leukemia; head and neck cancer; other cancers (connective tissue, skin, and others); metastatic cancer; or sickle cell anemia. The specific diagnoses used to identify each of these conditions are listed in the proposed measure specifications, which are available at: *http://www.cms.gov/Medicare/Quality-Initiatives-Patient-Assessment-Instruments/ESRDQIP/061_TechnicalSpecifications.html.*

Risk Adjustment

The denominator of the STrR uses expected transfusions calculated from a Cox model that is extended to handle repeated events. For computational purposes, the proposed STrR measure adopts a model with piecewise-constant baseline rates. A stage 1 model is fitted to the national data with piecewise-constant baseline rates across facilities. Transfusion rates are adjusted for: patient age; diabetes as a cause of ESRD; duration of ESRD; nursing home status; BMI at incidence; comorbidity index at incidence; and calendar year. This model allows baseline transfusion rates to vary between facilities, and applies the regression coefficients for the risk-adjustment model to each facility identically. This approach is robust to possible differences between facilities in the patient mix being treated. The second stage uses the risk-adjustment factor from the first stage as an offset. The stage 2 model then calculates the national baseline transfusion rate.

The STrR measure includes the following risk adjustors, which are obtained from the following data sources:

Risk adjustor	Data source
Age	REMIS database.
Diabetes as cause of ESRD	CMS Form 2728.
BMI at incidence of ESRD	CMS Form 2728.
Comorbidity index	CMS Form 2728.
Nursing home status	Nursing Home Minimum Dataset.
Duration of ESRD	CMS Form 2728.

More details on the risk-adjustment calculations, and the rationale for selecting these risk adjustors and not others, can be found at: *http://www.cms.gov/Medicare/Quality-Initiatives-Patient-Assessment-Instruments/ESRDQIP/061_Technical Specifications.html.*

As indicated in the table above, the proposed STrR measure risk adjusts predominantly on the basis of patient characteristics collected on CMS Form 2728, and we believe that this risk-adjustment methodology is reliable and valid.

NQF evaluates measures on the basis of four criteria: importance, scientific acceptability, feasibility, and usability. The validity and reliability of a measure's risk-adjustment calculations fall under the ''scientific acceptability'' criterion, and Measure Evaluation Criterion 2b4 specifies NQF's preferred approach for risk adjusting outcome measures (*http://www.qualityforum.org/docs/measure_evaluation_criteria.aspx#scientific*). This criterion states that patient comorbidities should only be included in risk-adjustment calculations if they are (1) present at the start of care and (2) not indicative of disparities or deficiencies in the quality of care provided. As indicated in the ''Inclusion and Exclusion Criteria'' subsection above, the proposed STrR clinical measure includes Medicare patients who have been documented as having had ESRD for at least 90 days and are not excluded for other reasons. Accordingly, we believe that NQF Measure Evaluation Criterion 2b4 supports risk-adjusting the proposed STrR measure on the basis of incident patient comorbidity data collected on CMS Form 2728, because these comorbidities are likely present at the start of care. Moreover, comorbidities that develop after the 90th day of chronic dialysis treatment, and are statistically associated with transfusions, can be reflective of the quality of care provided by the facility. Therefore, we do not believe that NQF Measure Evaluation Criterion 2b4 supports risk adjusting the proposed STrR measure on the basis of updated comorbidity data, because doing so may mask disparities or deficiencies in the quality of care provided, thereby obscuring assessments of facility performance. For these reasons, we believe that the risk-adjustment methodology for the proposed STrR measure is consistent with NQF guidelines for measure developers. Testing that we have undertaken has confirmed the validity and reliability of the proposed STrR measure using these data. We anticipate submitting the measure to the NQF for endorsement in CY 2015.

Full documentation of the STrR risk-adjustment methodology is available at: *http://www.cms.gov/Medicare/Quality-Initiatives-Patient-Assessment-Instruments/ESRDQIP/061_Technical Specifications.html.*

Calculating the STrR Measure

The STrR measure is calculated as the ratio of the number of observed transfusions to the number of expected transfusions. The ratio is greater than one for facilities that have more transfusions than would be expected for an average facility with similar cases, and less than one if the facility has fewer transfusions than would be expected for an average facility with similar cases. This ratio is calculated in terms of patient-years at risk. ''Patient-year at risk'' means that the denominator of the rate calculation is obtained by adding exposure times of all patients until a censoring event (that is, death, transplant, or end of the time period) because each patient's time at risk varies based on these censoring events. Time at risk is the time period in which each patient is eligible to have the transfusion event occur for the purposes of the measure calculation, exclusive of all days that have claims pertaining to the exclusionary comorbidities identified within the previous 12 months.

The predicted value from stage 1 of the model and the baseline rate from stage 2 of the model, as described above, are then used to calculate the expected number of transfusion events for each patient over the period during which the patient is seen to be at risk for a transfusion event.

The STrR is a point estimate—the best estimate of a facility's transfusion rate based on the facility's case mix. For more detailed information on the calculation methodology, please refer to our Web site at: *http://www.cms.gov/Medicare/Quality-Initiatives-Patient-Assessment-Instruments/ESRDQIP/061_TechnicalSpecifications.html.*

We seek comments on this proposal to adopt the proposed STrR clinical measure.

b. Proposal To Adopt the Pediatric Peritoneal Dialysis Adequacy Clinical Measure and Add the Proposed Measure to the Dialysis Adequacy Measure Topic

Section 1881(h)(2)(A)(i) states that the ESRD QIP must evaluate facilities based on measures of dialysis adequacy. Beginning with the PY 2018 ESRD QIP, we propose to add a new measure of pediatric peritoneal dialysis adequacy to the Dialysis Adequacy measure topic. If this proposal is finalized, then the modified Dialysis Adequacy measure topic would include four clinical measures on dialysis adequacy—(1) Adult Hemodialysis Adequacy; (2) Adult Peritoneal Dialysis Adequacy; and (3) Pediatric Hemodialysis Adequacy; and (4) Pediatric Peritoneal Dialysis Adequacy.

Approximately 900 pediatric patients in the United States receive peritoneal dialysis.[5] Although recent studies suggest improvement in mortality rates among pediatric patients receiving maintenance dialysis over time, mortality in this patient population remains high.[6] Despite a lack of long-term outcome studies on pediatric peritoneal dialysis patients, outcome studies performed in the adult ESRD population have shown an association between the dose of peritoneal dialysis and clinical outcomes,[7] which could suggest that improved quality of dialysis care in the fragile pediatric patient population may further improve survival in those patients.

Section 1881(h)(2)(A)(iv) gives the Secretary authority to adopt measures for the ESRD QIP that cover a wide variety of topics. Section 1881(h)(2)(B)(ii) of the Act states that ''In the case of a specified area or medical topic determined appropriate by the Secretary for which a feasible and practical measure has not been endorsed by the entity with a contract under section 1890(a) of Act [in this case NQF], the Secretary may specify a measure that is not so endorsed so long as due consideration is given to measures that have been endorsed or adopted by a consensus organization identified by the Secretary.'' We have given due consideration to endorsed measures, as well as those adopted by a consensus organization. Because no NQF-endorsed measures or measures adopted by a consensus organization on

[5] U.S. Renal Data System, USRDS 2012 Annual Data report: Atlas of Chronic Kidney Disease and End-stage Renal Disease in the United States, National Institutes of Health, National Institute of Diabetes and Digestive and Kidney Diseases, Bethesda, MD, 2012.

[6] U.S. Renal Data System, USRDS 2012 Annual Data report: Atlas of Chronic Kidney Disease and End-stage Renal Disease in the United States, National Institutes of Health, National Institute of Diabetes and Digestive and Kidney Diseases, Bethesda, MD, 2012.

[7] Paniagua R, Amato D, Vonesh E, et al. ''Effects of increased peritoneal clearance on mortality rates in peritoneal dialysis: ADEMEX, a prospective, randomized, controlled trial.'' *Journal of the American Society of Nephrology: JASN* (2002) 13:1307–1320. PMID: 11961019; *See also* Lo WK, Lui SL, Chan TM, et al. ''Minimal and optimal peritoneal Kt/V targets: Results of anuric peritoneal dialysis patient's survival analysis.'' *Kidney international* (2005) 67:2032–2038. PMID: 15840054.

pediatric peritoneal dialysis adequacy currently exist, we are proposing to adopt the Pediatric Peritoneal Dialysis Adequacy clinical measure under the authority of section 1881(h)(2)(B)(ii) of the Act.

The Measure Application Partnership expressed conditional support for measure XCBMM, ''Pediatric Peritoneal Dialysis Adequacy: Achievement of Target Kt/V'' in its January 2014 Pre-Rulemaking Report, noting it would ''consider this measure for inclusion in the program once it has been reviewed for endorsement.'' However, we believe the measure is ready for adoption in the ESRD QIP because it has been fully tested for reliability and has received consensus support from the TEP that was tasked with developing it. We intend to submit this measure to the NQF for endorsement in late 2014 or early 2015.

For PY 2018 and future payment years, we propose to adopt the Pediatric Peritoneal Dialysis Adequacy clinical measure, which assesses the percentage of eligible pediatric peritoneal dialysis patient-months in which a Kt/V of greater than or equal to 1.8 was achieved during the performance period. Qualifying patient-months are defined as months in which a peritoneal dialysis patient is under the age of 18 and has been receiving peritoneal dialysis treatment for 90 days or longer. Performance on this measure will be expressed as a proportion of patient-months meeting the measure threshold of 1.8, and the measure will be scored based on Kt/V data entered on Medicare 72x claims. The measure is a complement to the existing Kt/V dialysis adequacy measures previously adopted in the ESRD QIP. Technical specifications for the proposed pediatric peritoneal dialysis adequacy clinical measure can be found at: *http://www.cms.gov/Medicare/Quality-Initiatives-Patient-Assessment-Instruments/ESRDQIP/061_Technical Specifications.html.*

We seek comments on this proposal to adopt the Pediatric Peritoneal Dialysis Adequacy measure.

c. Proposed ICH CAHPS Clinical Measure

Section 1881(h)(2)(A)(ii) of the Act states that the Secretary shall specify, to the extent feasible, measures of patient satisfaction. Patients with ESRD are an extremely vulnerable population: They are completely reliant on ESRD providers for life-saving care, and they are often reluctant to express concerns about the care they receive from an array of staff, both professional and non-professional. Patient-centered experience is an important measure of the quality of patient care, and it is a component of the 2013 NQS, which emphasizes patient-centered care by rating patient experience as a means for empowering patients and improving the quality of their care.

Following a rigorous process, the ICH CAHPS Survey was developed to capture the experience of in-center hemodialysis patients. The NQF endorsed and the Measures Application Partnership supported this quality measure (NQF #0258: CAHPS In-Center Hemodialysis Survey). The ICH CAHPS Survey captures the experience of in-center hemodialysis patients on three dimensions: ''nephrologists' communication and caring;'' ''quality of dialysis center care and operations;'' and ''providing information to patients.'' Three global ratings are also part of the standardized ICH CAHPS Survey: Rating of the nephrologist; rating of the staff; and rating of the facility.

We believe that this measure enables patients to rate their experience of in-center dialysis treatment without fear of retribution. Public reporting of results from the ICH CAHPS survey, once enough data are available, will satisfy requests to provide consumers (patients and family members alike) with desired information on viewpoints from patients. In addition, collecting and reporting ICH CAHPS survey results assists facilities with their internal quality improvement efforts and external benchmarking with other facilities, and it provides CMS with information that can be used to monitor the experience of patients with ESRD.

Starting with the PY 2014 program, we have taken steps to develop the baseline data necessary to propose and implement NQF #0258 as a clinical measure in PY 2018. In the PY 2014 and PY 2015 programs, we adopted a reporting measure related to the ICH CAHPS survey, which required that facilities attest they had administered the survey according to the specifications set by the Agency for Healthcare Research and Quality (AHRQ). In the CY 2014 ESRD PPS final rule, we: (1) Expanded the ICH CAHPS reporting measure to require facilities to submit (via CMS-approved vendors) their survey results to CMS; (2) increased the patient minimum for the measure from 11 to 30 survey-eligible patients; (3) required that facilities (via CMS-approved vendors) administer the survey according to specifications set by CMS; and (4) required facilities (via CMS-approved vendors) to administer the survey twice during each performance period, and to report both sets of survey results by the date specified on *http://ichcahps.org,* starting in PY 2017 (78 FR 72193 through 72196).

By CY 2016 (the proposed performance period for the PY 2018 ESRD QIP), we will have worked with dialysis facilities for four years to help them become familiar with the ICH CAHPS survey. By that time, we believe that facilities will be sufficiently versed in the survey administration process to be reliably evaluated on the NQF-endorsed ICH CAHPS measure (NQF #0258). Because facilities (and CMS-approved vendors) will be familiar enough with the ICH CAHPS survey instrument to be reliably scored on the basis of their survey results, we believe it is reasonable to expand the ICH CAHPS reporting measure into a clinical measure for the PY 2018 ESRD QIP.

For these reasons, and because a clinical measure would have a greater impact on clinical practice by holding facilities accountable for their actual performance, we propose to replace the ICH CAHPS reporting measure that we adopted in the CY 2014 ESRD PPS Final Rule with a new clinical measure for PY 2018 and future payment years. This proposed ICH CAHPS clinical measure is NQF #0258: CAHPS In-Center Hemodialysis Survey. We are not proposing to change the semiannual survey administration and reporting requirements. The proposed scoring methodology for the ICH CAHPS clinical measure is discussed below in section III.G.4.c. Technical specifications for the ICH CAHPS clinical measure can be found at: *http://www.cms.gov/Medicare/Quality-Initiatives-Patient-Assessment-Instruments/ESRDQIP/061_Technical Specifications.html.*

We seek comments on this proposal.

d. Proposed Screening for Clinical Depression and Follow-Up Reporting Measure

Depression is the most common psychological disorder in patients with ESRD. Depression causes suffering, a decrease in quality of life, and impairment in social and occupational functions; it is also associated with increased health care costs. Current estimates put the depression prevalence rate as high as 20 percent to 25 percent in patients with ESRD.[8] Studies have also shown that depression and anxiety are the most common comorbid

[8] Kimmel PL, Cuckor D, Cohen SD, Peterson RA. Depression in end-stage renal disease patients: a critical review. Advances in Chronic Kidney Disease. 2007:14(4):328–34.

illnesses in patients with ESRD.[9] Moreover, depressive affect and decreased perception of social support have been associated with higher rates of mortality in the ESRD population, and some studies suggest that this association is as strong as that between medical risk factors and mortality.[10] Nevertheless, depression and anxiety remain under-recognized and under-treated, despite the availability of reliable screening instruments.[11] Therefore, a measure that assesses whether facilities screen patients for depression, and develop follow-up plans when appropriate, offers an opportunity to improve the health of patients with ESRD.

We are proposing to adopt a depression measure that is based on an NQF-endorsed measure (NQF #0418: Screening for Clinical Depression). NQF #0418 assesses the percentage of patients screened for clinical depression using an age-appropriate standardized tool and documentation of a follow-up plan where necessary. The Measures Application Partnership supported the use of NQF #0418 in the ESRD QIP in its January 2014 Pre-Rulemaking Report, because the measure ''addresses a National Quality Strategy [NQS] aim not adequately addressed in the program measure set'' and promotes person- and family-centered care. We are proposing to adopt a reporting measure based on this NQF-endorsed measure so that we can collect data that we can use in the future to calculate both achievement and improvement scores, should we propose to adopt the clinical version of this measure in future rulemaking. Although we recognize that we recently adopted the NHSN Bloodstream Infection clinical measure despite a lack of baseline data to calculate achievement and improvement scores, we believe that measure warranted special treatment in light of the fact that it addresses patient safety. Because the proposed screening for clinical depression measure addresses quality of life and patient well-being, and not patient safety, we think it is appropriate to adopt it as a reporting measure until such time that we can collect the baseline data needed to score it as a clinical measure.

Section 1881(h)(2)(B)(ii) of the Act states that ''In the case of a specified area or medical topic determined appropriate by the Secretary for which a feasible and practical measure has not been endorsed by the entity with a contract under section 1890(a) [in this case NQF], the Secretary may specify a measure that is not so endorsed as long as due consideration is given to measures that have been endorsed or adopted by a consensus organization identified by the Secretary.'' Because we have given due consideration to endorsed measures as well as those adopted by a consensus organization and determined it is not practical or feasible to adopt NQF #0418 as a clinical measure in the ESRD QIP at this time, we are proposing to adopt the Screening for Clinical Depression and Follow-Up Plan reporting measure under the authority of section 1881(h)(2)(B)(ii) of the Act.

For PY 2018 and future payment years, we propose that facilities must report one of the following conditions in CROWNWeb, at least once per performance period, for each qualifying patient (defined below):

1. Screening for clinical depression is documented as being positive, and a follow-up plan is documented.
2. Screening for clinical depression documented as positive, and a follow-up plan not documented, and the facility possess documentation stating the patient is not eligible.
3. Screening for clinical depression documented as positive, the facility possesses no documentation of a follow-up plan, and no reason is given.
4. Screening for clinical depression is documented as negative, and a follow-up plan is not required.
5. Screening for clinical depression not documented, but the facility possesses documentation stating the patient is not eligible.
6. Clinical depression screening not documented, and no reason is given.

For this proposed measure, qualifying patients are defined as patients 12 years or older who have been treated at the facility for 90 days or longer. This proposed measure will collect the same data described in NQF #0418, but we are proposing to score facilities based on whether they successfully report the data, and not the measure results. More specifically, facilities will be scored on whether they report one of the above conditions for each qualifying patient once before February 1 of the year directly following the performance period. Technical specifications for the Screening for Clinical Depression and Follow-Up reporting measure can be found at: *http://www.cms.gov/Medicare/Quality-Initiatives-Patient-Assessment-Instruments/ESRDQIP/061_Technical Specifications.html.*

We seek comments on these proposals.

e. Proposed Pain Assessment and Follow-Up Reporting Measure

Pain is one of the most common symptoms in patients with ESRD.[12] Studies have shown that pain is a significant problem for more than 50 percent of patients with ESRD, and up to 82 percent of those patients report moderate to severe chronic pain.[13] Pain is commonly associated with quality of life in early- and late-stage chronic kidney disease patients, but it is not effectively managed in the ESRD patient population and chronic pain often goes untreated.[14] Observational studies suggest that under-managed pain has the potential to induce or exacerbate comorbid conditions in ESRD, which may in turn adversely affect dialysis treatment.[15] Patients with ESRD frequently experience pain that has a debilitating impact on their daily lives, and research has shown a lack of effective pain management strategies currently in place in dialysis facilities.[16] Therefore, a measure that assesses whether facilities regularly assess their patients' pain, and develop follow-up plans as necessary, offers the possibility

[9] Feroze, U., Martin, D., Reina-Patton, A., Kalantar-Zadeh, K., & Kopple, J. D. (2010). Mental health, depression, and anxiety in patients on maintenance dialysis. *Iranian Journal of Kidney Diseases,* 4(3), 173–80.

[10] Cukor, D., Cohen, S. D., Peterson, R. A., & Kimmel, P. L. (2007). Psychosocial aspects of chronic disease: ESRD as a paradigmatic illness. *Journal of the American Society of Nephrology,* 18(12), 3042–3055; and Kimmel, P. L., Peterson, R. A., Weihs, K. L., Simmens, S. J., Alleyne, S., Cruz, I., & Veis, J. H. (2000). Multiple measurements of depression predict mortality in a longitudinal study of chronic hemodialysis outpatients. *Kidney International,* 57(5), 2093–2098.

[11] Preljevic, V. T., Østhus, T. B. H., Sandvik, L., Opjordsmoen, S., Nordhus, I. H., Os, I., & Dammen, T. (2012). Screening for anxiety and depression in dialysis patients: Comparison of the Hospital Anxiety and Depression Scale and the Beck Depression Inventory. *Journal of Psychosomatic Research,* 73(2), 139–144.

[12] Cohen, S. D., Patel, S. S., Khetpal, P., Peterson, R. A., & Kimmel, P. L. (2007). Pain, sleep disturbance, and quality of life in patients with chronic kidney disease. *Clinical Journal of the American Society of Nephrology,* 2(5), 919–925.

[13] Davison SN. Pain in hemodialysis patients: prevalence, cause, severity, and management. *American Journal of Kidney Disease.* 2003; 42:1239–1247

[14] Davison, S. N. (2007). The prevalence and management of chronic pain in end-stage renal disease. *Journal of Palliative Medicine,* 10(6), 1277–1287.

[15] De Castro C. (2013). Pain assessment and management in hemodialysis patients. *CANNT Journal;* 23(3):29–32; Weisbord SD, Fried LF, Arnold RM, Fine MJ, Levenson DJ, et al. Prevalence, severity, and importance of physical and emotional symptoms in chronic hemodialysis patients. (2005) *Journal of the American Society of Nephrology;* 16(8):2487–2494.

[16] De Castro C. (2013). Pain assessment and management in hemodialysis patients. *CANNT Journal;* 23(3):29–32; Wyne A, Rai R, Cuerden M, Clark WF, Suri RS. (2011). Opioid and benzodiazepine use in end-stage renal disease: a systematic review. *Clinical Journal of the American Society of Nephrology.* 6(2):326–333.

of improving the health and well-being of patients with ESRD.

We are proposing to adopt a pain measure that is based on an NQF-endorsed measure (NQF #0420: Pain Assessment and Follow-Up). NQF #0420 assesses the percentage of patients with documentation of a pain assessment using a standardized tool, and documentation of a follow-up plan when pain is present. The Measures Application Partnership supported the use of NQF #0420 in the ESRD QIP in its January 2014 Pre-Rulemaking Report, because the measure ''addresses a National Quality Strategy [NQS] aim not adequately addressed in the program measure set'' and promotes person- and family-centered care. We are proposing to adopt a reporting measure based on this NQF-endorsed measure so that we can collect data that we can use in the future to calculate both achievement and improvement scores, should we propose to adopt the clinical version of this measure in future rulemaking. Although we recognize that we recently adopted the NHSN Bloodstream Infection clinical measure despite a lack of baseline data to calculate achievement and improvement scores, we believe that measure warranted special treatment in light of the fact that it addresses patient safety. Because the proposed screening for pain measure addresses quality of life and patient well-being, and not patient safety, we think it is appropriate to adopt it as a reporting measure until such time that we can collect the baseline data needed to score it as a clinical measure.

Section 1881(h)(2)(B)(ii) of the Act states that ''In the case of a specified area or medical topic determined appropriate by the Secretary for which a feasible and practical measure has not been endorsed by the entity with a contract under section 1890(a) of the Act [in this case NQF], the Secretary may specify a measure that is not so endorsed so long as due consideration is given to measures that have been endorsed or adopted by a consensus organization identified by the Secretary.'' Because we have given due consideration to endorsed measures, as well as those adopted by a consensus organization, and determined it is not practical or feasible to adopt those measures in the ESRD QIP, we are proposing to adopt the Pain Assessment and Follow-Up reporting measure under the authority of section1881(h)(2)(B)(ii) of the Act.

For PY 2018 and future payment years, we propose that facilities must report one of the following conditions in CROWNWeb, once every six months per performance period, for each qualifying patient (defined below):

1. Pain assessment using a standardized tool is documented as positive, and a follow-up plan is documented.
2. Pain assessment documented as positive, a follow-up plan is not documented, and the facility possesses documentation that the patient is not eligible.
3. Pain assessment documented as positive using a standardized tool, a follow-up plan is not documented, and no reason is given.
4. Pain assessment using a standardized tool is documented as negative, and no follow-up plan required.
5. No documentation of pain assessment, and the facility possesses documentation the patient is not eligible for a pain assessment using a standardized tool.
6. No documentation of pain assessment, and no reason is given.

For this measure, a qualifying patient is defined as a patient aged 18 years or older who has been treated at the facility for 90 days or longer. This proposed measure will collect the same data described in NQF #0420, but we are proposing a few modifications to the NQF-endorsed version. First, we are proposing that facilities must report data for each patient once every six months, whereas NQF #0420 requires facilities to report the data based on each visit. We are proposing this modification because we agree with public comments reflected on the Measures Application Partnership's January 2014 Pre-Rulemaking Report, which stated that conducting a pain assessment every time a patient receives dialysis would be unduly burdensome for facilities. Second, we are proposing that conditions covering the first six months of the performance period must be reported in CROWNWeb before August 1 of the performance period, and that conditions covering the second six months of the performance period must be reported in CROWNWeb before February 1 of the year directly following the performance period. We believe this reporting schedule will ensure regular monitoring and follow-up of patients' pain without imposing an undue burden on facilities. Third, we are proposing to score facilities based on whether they successfully report the data, and not based on the measure results. Technical specifications for the Pain Assessment and Follow-Up reporting measure can be found at: *http://www.cms.gov/Medicare/Quality-Initiatives-Patient-Assessment-Instruments/ESRDQIP/061_TechnicalSpecifications.html*.

We seek comments on this proposal.

f. Proposed NHSN Healthcare Personnel Influenza Vaccination Reporting Measure

Infection is the second most common cause of death in patients with ESRD, following cardiovascular causes,[17] and influenza accounts for significant morbidity and mortality in patients receiving hemodialysis.[18] Healthcare personnel (HCP) can acquire influenza from patients and transmit influenza to patients and other HCP; decreasing transmission of influenza from HCP to persons at high risk likely reduces influenza-related deaths among persons at high risk for complications from influenza, including patients with ESRD.[19] Vaccination is an effective preventive measure against influenza that can prevent many illnesses, deaths, and losses in productivity.[20] In addition, HCP are considered high priorities for vaccine use. Achieving and sustaining high influenza vaccination coverage among HCP is intended to help protect HCP and their patients, and to reduce disease burden and healthcare costs. Results of studies in post-acute care settings similar to the ESRD facility setting indicate that higher vaccination coverage among HCP is associated with lower all-cause mortality.[21] We therefore propose to adopt an NHSN HCP Influenza Vaccination reporting measure for PY 2018 and future payment years.

We are proposing to use a measure that is based on an NQF-endorsed measure (NQF #0431: Influenza Vaccination Coverage Among Healthcare Personnel) of the percentage of qualifying HCP who (a) received an influenza vaccination; (b) were determined to have a medical

[17] Soni R, Horowitz B, Unruh M. Immunization in end-stage renal disease: Opportunity to improve outcomes. Semin, Dial. 2013 Jul–Aug;26(4):416–26.

[18] Fiore AE, Shay DK, Haber P, et al. Prevention and control of influenza. Recommendations of the Advisory Committee on Immunization Practices (ACIP). MMWR Recomm Rep. 2007;56:1–54.

[19] Pearson ML, Bridges CM, Harper SA. Influenza vaccination of health-care personnel: Recommendations of the Healthcare Infection Control Practices Advisory Committee (HICPAC) and the Advisory Committee on Immunization Practices (ACIP). MMWR. 2006:55:1–16.

[20] Talbot TR, Bradley SE., Cosgrove SE., et al. Influenza vaccination of healthcare workers and vaccine allocation for healthcare workers during vaccine shortages. Infect Control Hosp Epidemiol. 2005;26(11):882–90.

[21] Carman WF, Elder AG, Wallace LA, et al. Effects of influenza vaccination of health-care workers on mortality of elderly people in long-term care: a randomized controlled trial. Lancet. 2000;355(9198):93–7; *see also* Potter J, Stott DJ, Roberts MA, et al. Influenza vaccination of health care workers in long-term-care hospitals reduces the mortality of elderly patients. J infect Dis. 1997;175(1):1–6.

contraindication; (c) declined influenza vaccination; or (d) were of an unknown vaccination status. A ''qualifying HCP'' is defined as an employee, licensed independent practitioner, or adult student/trainee/volunteer who works in a facility for at least one day between October 1 and March 31. The Measures Application Partnership supported the use of NQF #0431 in the ESRD QIP in its January 2014 Pre-Rulemaking Report because the measure is NQF-endorsed for use in the dialysis facility care setting. We are proposing to adopt a reporting measure based on this NQF-endorsed measure so that we can collect data that we can use in the future to calculate both achievement and improvement scores, should we propose to adopt the clinical version of this measure in future rulemaking. Although we recognize that we recently adopted the NHSN Bloodstream Infection clinical measure despite a lack of baseline data to calculate achievement and improvement scores, we believe that measure warranted special treatment in light of the fact that it addresses patient safety. Because the proposed NHSN HCP Influenza Vaccination reporting measure addresses population health, and not patient safety, we think it is appropriate to adopt it as a reporting measure until such time that we can collect the baseline data needed to score it as a clinical measure.

Section 1881(h)(2)(B)(ii) of the Act states that ''In the case of a specified area or medical topic determined appropriate by the Secretary for which a feasible and practical measure has not been endorsed by the entity with a contract under section 1890(a) [in this case, NQF], the Secretary may specify a measure that is not so endorsed as long as due consideration is given to measures that have been endorsed or adopted by a consensus organization identified by the Secretary.'' Because we have given due consideration to endorsed measures as well as those adopted by a consensus organization, and determined it is not practical or feasible to adopt this measure in the ESRD QIP, we are proposing to adopt the NHSN Healthcare Personnel Influenza Vaccination reporting measure under the authority of section 1881(h)(2)(B)(ii) of the Act.

For PY 2018 and future payment years, we propose that facilities must submit, on an annual basis, an HCP Influenza Vaccination Summary Form to CDC's NHSN system, according to the specifications available in the NHSN Healthcare Personnel Safety Component Protocol (*http://www.cdc.gov/nhsn/PDFs/HPS-manual/vaccination/HPS-flu-vaccine-protocol.pdf*). This proposed measure differs from NQF #0431 in that we are proposing to collect the same data but will score facilities on the basis of whether they submit this data, rather than on the percentage of HCP vaccinated. We propose that the deadline for reporting this information to NHSN be May 15th of each year. This date is consistent with the reporting deadline established by CMS for other provider types reporting HCP vaccination data to NHSN. Because the flu season typically spans from October to April, NHSN protocols submitted by May 15 would document vaccinations received during the preceding flu season. For example, NHSN HCP Influenza Vaccination Summary Forms submitted by May 15, 2016, would contain data from October 1, 2015 to March 31, 2016, and would be used for the PY 2018 ESRD QIP; NHSN protocols submitted by May 15, 2017, would contain data from October 1, 2016 to March 31, 2017, and would be used for the PY 2019 ESRD QIP, and so on. Technical specifications for this measure can be found at: *http://www.cms.gov/Medicare/Quality-Initiatives-Patient-Assessment-Instruments/ESRDQIP/061_Technical Specifications.html*.

We request comments on this proposal.

Figure 2: Summary of Proposed PY 2018 Measures

★ New measure for PY 2018

Clinical Measures

1. Vascular Access Type Measure Topic – AVF
2. Vascular Access Type Measure Topic – Catheter ≥ 90 days
3. Kt/V Dialysis Adequacy Measure Topic – Adult Hemodialysis
4. Kt/V Dialysis Adequacy Measure Topic – Adult Peritoneal Dialysis
5. Kt/V Dialysis Adequacy Measure Topic – Pediatric Hemodialysis
6. ★ Kt/V Dialysis Adequacy Measure Topic – Pediatric Peritoneal Dialysis
7. Hypercalcemia
8. NHSN Bloodstream Infection in Hemodialysis Outpatients
9. Standardized Readmission Ratio
10. ★ Standardized Transfusion Ratio
11. ★ ICH CAHPS Patient Experience of Care Survey

Reporting Measures

1. Mineral Metabolism
2. Anemia Management
3. ★ Clinical Depression Screening and Follow-Up
4. ★ Pain Assessment and Follow-Up
5. ★ NHSN Healthcare Personnel Influenza Vaccination

2. Proposed Performance Period for the PY 2018 ESRD QIP

Section 1881(h)(4)(D) of the Act requires the Secretary to establish the performance period with respect to a year, and that the performance period occur prior to the beginning of such year. In accordance with our proposal to adopt CY 2015 as the performance period for the PY 2017 ESRD QIP, as well as our policy goal to collect 12 months of data on each measure when feasible, we are proposing to adopt CY 2016 as the performance period for the PY 2018 ESRD QIP. With respect to the NHSN Healthcare Personnel Influenza Vaccination Reporting measure, we are proposing that the performance period will be from October 1, 2015 through March 31, 2016, which is consistent with the length of the 2015–2016 influenza season.

We seek comments on these proposals.

3. Proposed Performance Standards, Achievement Thresholds, and Benchmarks for the PY 2018 ESRD QIP

a. Proposed Performance Standards, Achievement Thresholds, and Benchmarks for the Clinical Measures in the PY 2018 ESRD QIP

For the same reasons stated in the CY 2013 ESRD PPS final rule (77 FR 67500 through 76502), we are proposing for PY 2018 to set the performance standards, achievement thresholds, and benchmarks based on the 50th, 15th, and 90th percentile, respectively, of national performance in CY 2014 for all the clinical measures except for the proposed ICH CAHPS clinical measure. As finalized in the CY 2014 ESRD PPS Final Rule (78 FR 72213), facilities are not required to administer the ICH CAHPS survey (via a CMS-approved third-party vendor) on a semiannual basis until CY 2015, the proposed performance period for the PY 2017 ESRD QIP. We believe that ICH CAHPS data collected during CY 2014 will not be reliable enough to use for the purposes of establishing performance standards, achievement thresholds, and benchmarks, because facilities are only required to administer the survey once in CY 2014. Therefore, we propose to set the performance standards, achievement thresholds, and benchmarks based on the 50th, 15th, and 90th percentile, respectively, of national performance in CY 2015 for the proposed ICH CAHPS clinical measure.

We seek comments on these proposals.

b. Estimated Performance Standards, Achievement Thresholds, and Benchmarks for the Clinical Measures Proposed for the PY 2018 ESRD QIP

At this time, we do not have the necessary data to assign numerical values to the proposed performance standards for the clinical measures, because we do not yet have data from CY 2014 or the first portion of CY 2015. We will publish values for the clinical measures, using data from CY 2014 and the first portion of CY 2015, in the CY 2016 ESRD PPS Final Rule.

c. Proposed Performance Standards for the PY 2018 Reporting Measures

In the CY 2014 ESRD PPS Final Rule, we finalized performance standards for the Anemia Management and Mineral Metabolism reporting measures (78 FR 72213). We are not proposing any changes to this policy beyond the proposal to modify the reporting requirements for the Mineral Metabolism reporting measure, which appears above in Section III.G.1.

For the Screening for Clinical Depression and Follow-Up reporting measure, we propose to set the performance standard as successfully reporting one of the above-listed clinical depression and follow-up screening conditions for each qualifying patient in CROWNWeb before the February 1st

directly following the performance period.

For the Pain Assessment and Follow-Up reporting measure, we propose to set the performance standard as successfully reporting one of the above-listed pain assessment and follow-up conditions for each qualifying patient in CROWNWeb twice annually: once before August 1st for the first 6 months of the performance period, and once before the February 1st directly following the performance period for the last six months of the performance period.

For the NHSN Healthcare Provider Influenza Vaccination reporting measure, we propose to set the performance standard as successfully submitting the HCP Influenza Vaccination Summary Form to CDC's NHSN system by May 15, 2017.

We seek comments on these proposals.

4. Proposal for Scoring the PY 2018 ESRD QIP Measures

a. Scoring Facility Performance on Clinical Measures Based on Achievement

In the CY 2014 ESRD PPS Final Rule, we finalized a policy for scoring performance on clinical measures based on achievement (78 FR 72215). In determining a facility's achievement score for each measure under the PY 2018 ESRD QIP, we propose to continue using this methodology for all clinical measures except the ICH CAHPS clinical measure. Under this methodology, facilities receive points along an achievement range based on their performance during the proposed performance period for each measure, which we define as a scale between the achievement threshold and the benchmark.

b. Scoring Facility Performance on Clinical Measures Based on Improvement

In the CY 2014 ESRD PPS Final Rule, we finalized a policy for scoring performance on clinical measures based on improvement (78 FR 72215 through 72216). In determining a facility's improvement score for each measure under the PY 2018 ESRD QIP, we propose to continue using this methodology for all clinical measures except the ICH CAHPS clinical measure. Under this methodology, facilities receive points along an improvement range, defined as a scale running between the improvement threshold and the benchmark. We propose to define the improvement threshold as the facility's performance on the measure during CY 2015. The facility's improvement score would be calculated by comparing its performance on the measure during CY 2016 (the proposed performance period) to its performance rate on the measure during CY 2015.

c. Proposal for Scoring the ICH CAHPS Clinical Measure

For PY 2018 and future payment years, we propose the following scoring methodology for the ICH CAHPS clinical measure. We propose to score the measure on the basis of three composite measures and three global ratings.

Composite Measures:

- Nephrologists' Communication and Caring;
- Quality of Dialysis Center Care and Operations; and
- Providing Information to Patients.

Global Ratings:

- Overall rating of the nephrologists (Question 8)
- Overall rating of the dialysis center staff (Question 32)
- Overall rating of the dialysis facility (Question 35)

The composite measures are groupings of questions that measure the same dimension of healthcare. (Groupings of questions and composite measures can be found at *https://ichcahps.org/Portals/0/ICH_Composites_English.pdf.*) Global ratings questions employ a scale of 0 to 10, worst to best; each of the questions within a composite measure use either ''Yes'' or ''No'' responses, or response categories ranging from ''Never'' to ''Always,'' to assess the patient's experience of care at a facility. Facility performance on each composite measure will be determined by the percent of patients who choose ''top-box'' responses (i.e., most positive or ''Always'') to the ICH CAHPS survey questions in each domain. Examples of questions and top-box responses are displayed below:

Q11: In the last 3 months, how often did the dialysis center staff explain things in a way that was easy for you to understand?

Top-box response: ''Always''

Q19: The dialysis center staff can connect you to the dialysis machine through a graft, fistula, or catheter. Do you know how to take care of your graft, fistula or catheter?

Top-box response: ''Yes''

We propose that a facility will receive an achievement score and an improvement score for each of the composite measures and global ratings in the ICH CAHPS survey instrument. For purposes of calculating achievement scores for the ICH CAHPS clinical measure, we propose to base the score on where a facility's performance rate falls relative to the achievement threshold and the benchmark for that measure. We propose that facilities will earn between 0 to 10 points for achievement based on where its performance for the measure falls relative to the achievement threshold. If a facility's performance rate during the performance period is:

- Equal to or greater than the benchmark, then the facility would receive 10 points for achievement;
- Less than the achievement threshold, then the facility would receive 0 points for achievement; or
- Equal to or greater than the achievement threshold, but below the benchmark, then the following formula would be used to derive the achievement score: [9 * ((Facility's performance period rate − achievement threshold)/(benchmark − achievement threshold))] + .5, with all scores rounded to the nearest integer, with half rounded up.

For the purposes of calculating improvement scores for the ICH CAHPS clinical measure, we propose that the improvement threshold will be defined as facility performance in CY 2015, and further propose to base the score on where a facility's performance rate falls relative to the improvement threshold and the benchmark for that measure. We propose that a facility can earn between 0 to 9 points based on how much its performance on the measure during the performance period improves from its performance on the measure during the baseline period. If a facility's performance rate during the performance period is:

- Less than the improvement threshold, then the facility would receive 0 points for improvement; or
- Equal to or greater than the improvement threshold, but below the benchmark, then the following formula would be used to derive the improvement score: [10 * ((Facility performance period rate − Improvement threshold)/(Benchmark − Improvement threshold))] − .5, with all scores rounded to the nearest integer, with half rounded up.

We further propose that a facility's ICH CAHPS score will be based on the higher of the facility's achievement or improvement score for each of the composite measures and global ratings. Additionally, we propose that achievement and/or improvement scores on the three composite measures and the three global ratings will be averaged together to yield an overall score on the ICH CAHPS clinical measure.

The timing and frequency of administering the ICH CAHPS survey is critical to obtaining reliable results. For

example, if a facility did not conduct two semiannual surveys during a given performance period, then patient experiences during the 6-month period(s) covered by the missed survey(s) would not be captured. Additionally, if facilities (via CMS-approved vendors) do not report their ICH CAHPS survey results to CMS, then these results cannot be taken into account when establishing national performance standards for the measure, thereby diminishing the measure's reliability. Because timely survey administration and data reporting is critical to reliably scoring ICH CAHPS as a clinical measure in the ESRD QIP, we propose that a facility will receive a score of 0 on the measure if it does not meet the survey administration and reporting requirements finalized in the CY 2014 ESRD PPS Final Rule (78 FR 72193 through 72196).

We seek comments on these proposals to score the ICH CAHPS clinical measure.

d. Proposals for Calculating Facility Performance on Reporting Measures

In the CY 2014 ESRD PPS Final Rule, we finalized policies for scoring performance on the Anemia Management and Mineral Metabolism reporting measures in the ESRD QIP (78 FR 72216). We are not proposing any changes to these policies beyond the proposals that were made beginning with the PY 2017 program, which appear in section III.F.7 above.

With respect to the Screening for Clinical Depression and Follow-up, Pain Assessment and Follow-Up, and NHSN Healthcare Provider Influenza Vaccination reporting measures, we propose that facilities will receive a score of 10 on the measures if they meet the proposed performance standards for the measures, and a score of 0 on the measure if they do not. We are proposing to score these reporting measures differently than the Anemia Management and Mineral Metabolism reporting measures because they require annual or semiannual reporting, and therefore scoring based on monthly reporting rates is not feasible.

We seek comments on these proposals.

5. Proposed Minimum Data for Scoring Measures for the PY 2018 ESRD QIP

With the following exceptions discussed below, we are not proposing to change the minimum data policies for the PY 2018 ESRD QIP from that proposed above for the PY 2017 ESRD QIP. We are also proposing that the 30 survey-eligible patient minimum during the eligibility period and 30 survey complete minimum during the performance period that we proposed to adopt for the ICH CAHPS reporting measure will also apply to the ICH CAHPS clinical measure. We have determined that the ICH CAHPS survey is satisfactorily reliable when a facility obtains a total of at least 30 completed surveys during the performance period. Therefore, even if a facility meets the 30 survey-eligible patient minimum during the eligibility period and the survey administration and reporting requirements, if the facility is only able to obtain 29 or fewer survey completes during the performance period, the facility will not be eligible to receive a score on the ICH CAHPS clinical measure.

We further propose the facilities with fewer than 10 patient-years at risk will not be eligible to receive a score on the proposed STrR clinical measure. We considered adopting the 11-patient minimum requirement that we use for the other clinical measures. We decided, however, to base facilities' eligibility for the measure in terms of the number of patient-years at risk, because facility performance rates are based on the number of patient-years at risk, not the number of patients. Additionally, we decided to set the minimum data requirements at 10 patient-years at risk because, based on national average event rates, this is the time required to achieve an average of 5 transfusion events. The 5 expected transfusion events requirement translates to a standard deviation of approximately 0.45 if the facility has rates exactly corresponding to the national average. In addition, 10 patient-years at risk is the threshold used in the Dialysis Facility Compare program, and we believe that public-reporting and VBP programs for ESRD should adopt consistent measure specifications where feasible.

For the proposed STrR measure, we propose to apply the small-facility adjuster to facilities with 21 or fewer patient-years at risk. We decided to base the threshold for applying the small-facility adjuster on the number of patient-years at risk, because facility performance rates are based on the number of patient-years at risk, not the number of patients. We are proposing to set the threshold at 21 patient-years at risk, because we determined that this was the minimum number of patient-years at risk needed to achieve an IUR of 0.4 (that is, moderate reliability) for the proposed STrR measure. Because the small-facility adjuster gives facilities the benefit of the doubt when measure scores can be unduly influenced by a few outlier patients, we believe that setting the threshold at 21 qualifying patient-years at risk will not unduly penalize facilities that treat small numbers of patients on the proposed STrR clinical measure.

With these exceptions, we are not proposing to change the policy, finalized most recently in the CY 2014 ESRD PPS Final Rule (78 FR 72220 through 72221), that facilities must have at least 11 qualifying patients for the entire performance period in order to be scored on a clinical measure.

We currently have a policy, most recently finalized in the CY 2014 ESRD PPS final rule (78 FR 72197 through 72198 and 72220 through 72221), to score facilities on reporting measures only if they have a minimum number of qualifying patients during the performance period. As discussed in Section III.F.7 above, we are proposing to modify the case minimum requirements for the Anemia Management and Mineral Metabolism reporting measures beginning with the PY 2017 ESRD QIP. We are not proposing any additional changes in the patient minimum requirements for the Anemia Management and Mineral Metabolism reporting measures in the PY 2018 program.

For the Screening for Clinical Depression and Follow-Up and the Pain Assessment and Follow-Up reporting measures, we propose a case minimum of one qualifying patient. We believe this patient minimum requirement will enable us to gather a sufficient amount of data to calculate future performance standards, benchmarks, and achievement thresholds, should we propose to adopt clinical versions of these measures in the future.

As discussed in Section III.G.2.f, we are not proposing that a facility will have to meet a patient minimum in order to receive a score on the NHSN Healthcare Provider Influenza Vaccination reporting measure. We believe it is standard practice for all HCP to receive influenza vaccinations and, as discussed above, HCP vaccination is likely to reduce influenza-related deaths and complications among the ESRD population. Accordingly, we are proposing that all facilities, regardless of patient population size, will be scored on the influenza vaccination measure.

Under our current policy, we begin counting the number of months for which a facility is open on the first day of the month after the facility's CCN open date. Only facilities with a CCN open date before July 1, 2016, are eligible to be scored on the Anemia Management and Mineral Metabolism reporting measures in the PY 2018

program. We are proposing to apply this finalized policy to the proposed Screening for Depression and Follow-Up and the Pain Assessment and Follow-Up reporting measures. We further propose that facilities with a CCN open date after January 1, 2016, will not be eligible to receive a score on the NHSN Healthcare Personnel Influenza Vaccination reporting measure in the PY 2018 program. Due to the time it takes for facilities to register with NHSN and become familiar with the NHSN Healthcare Personnel Safety Component Protocol, we do not believe it is reasonable to expect facilities with CCN open dates after January 1, 2016, to submit an HCP Influenza Vaccination Summary Form to CDC's NHSN system before the May 15, 2016, deadline.

As finalized in the CY 2014 ESRD PPS Final Rule (78 FR 72220), facilities are generally eligible to receive a score on the clinical measures if their CCN open date occurs before the end of the performance period. However, facilities with a CCN open date after January 1 of the performance period are not eligible to receive a score on the NHSN Bloodstream Infection clinical measure, due to the need to collect 12 months of data to accurately score the measure. We are now proposing that facilities with a CCN open date after January 1, 2016, will also not be eligible to receive a score on the ICH CAHPS clinical measure in the PY 2018 program. Due to the additional time needed to arrange to contract with CMS-approved third-party vendors, and for vendors to administer the survey twice and report the results to CMS, we do not believe facilities with CCN open dates after January 1, 2016, can reasonably be expected to meet the requirements associated with the proposed ICH CAHPS clinical measure for that performance period.

As discussed in the Section III.G.7 below, we are continuing our policy that a facility will not receive a TPS unless it receives a score on at least one clinical measure and at least one reporting measure. We note that finalizing the above proposals would result in facilities not being eligible for a payment reduction for the PY 2018 ESRD QIP if they have a CCN open date on or after July 1, 2016.

We seek comments on these proposals.

Table 29 displays the proposed patient minimum requirements for each of the measures, as well as the proposed CCN open dates after which a facility will not be eligible to receive a score on a reporting measure.

TABLE 29—PROPOSED MINIMUM DATA REQUIREMENTS FOR THE PY 2018 ESRD QIP

Measure	Minimum data requirements	CCN Open date	Small facility adjuster
Adult Hemodialysis Adequacy (Clinical).	11 qualifying patients	N/A	11–25 patients.
Adult Peritoneal Dialysis Adequacy (Clinical).	11 qualifying patients	N/A	11–25 patients.
Pediatric Hemodialysis Adequacy (Clinical).	11 qualifying patients	N/A	11–25 patients.
Pediatric Peritoneal Dialysis Adequacy (Clinical).	11 qualifying patients	N/A	11–25 patients.
Vascular Access Type: Catheter (Clinical).	11 qualifying patients	N/A	11–25 patients.
Vascular Access Type: Fistula (Clinical).	11 qualifying patients	N/A	11–25 patients.
Hypercalcemia (Clinical)	11 qualifying patients	N/A	11–25 patients.
NHSN Bloodstream Infection (Clinical).	11 qualifying patients	Before January 1, 2016	11–25 patients.
SRR (Clinical)	11 index discharges	N/A	11–41 index discharges.
STrR (Clinical)	10 patient-years at risk	N/A	10–21 patient-years at risk.
ICH CAHPS (Clinical)	Facilities with 30 or more survey-eligible patients during the calendar year preceding the performance period must submit survey results. Facilities will not receive a score if they do not obtain a total of at least 30 completed surveys during the performance period.	Before January 1, 2016	N/A.
Anemia Management (Reporting).	Facilities with 11 or more qualifying patients must report data for all patients. Facilities with between 2 and 11 qualifying patients must report data on all but 1 qualifying patient. Facilities with 1 qualifying patient must report for that patient.	Before July 1, 2016	N/A.
Mineral Metabolism (Reporting).	Facilities with 11 or more qualifying patients must report data for all patients. Facilities with between 2 and 11 qualifying patients must report data on all but 1 qualifying patient. Facilities with 1 qualifying patient must report for that patient.	Before July 1, 2016	N/A.
Depression Screening and Follow-Up (Reporting).	One qualifying patient	Before July 1, 2016	N/A.
Pain Assessment and Follow-Up (Reporting).	One qualifying patient.	Before July 1, 2016	N/A.
NHSN HCP Influenza Vaccination (Reporting).	N/A	Before January 1, 2016	N/A.

6. Proposal for Calculating the Clinical Measure Domain Score

As the ESRD QIP evolves and we continue to adopt new clinical measures that track the goals of the NQS, we do not believe that the current scoring methodology provides the program with enough flexibility to strengthen incentives for quality improvement in areas where quality gaps continue to exist. Therefore, under the authority of Section 1881(h)(3)(A)(i) of the Act, we are proposing to revise the scoring methodology beginning with the PY 2018 ESRD QIP so that we assign measure scores on the basis of two domains: a Clinical Measure Domain and a Reporting Measure Domain.

First, we propose to establish a Clinical Measure Domain, which we define as an aggregated metric of facility performance on the clinical measures and measure topics in the ESRD QIP. Under this proposed approach, we would score individual clinical measures and measure topics using the methodology we finalize for that measure or measure topic. Clinical measures and measure topics would then be grouped into subdomains within the Clinical Measure Domain, according to quality categories. Within these subdomains, measure scores would be multiplied by a weighting coefficient, weighted measure scores would be summed together to determine subdomain scores, and then subdomain scores would be summed together to determine a facility's Clinical Measure Domain score. This scoring methodology provides more flexibility to focus on quality improvement efforts, because it makes it possible to group measures according to quality categories and to weight each category according to opportunities for quality improvement.

We further propose to divide the clinical measure domain into three subdomains for the purposes of calculating the Clinical Measure Domain score:

- Safety
- Patient and Family Engagement/Care Coordination
- Clinical Care

We took several considerations into account when selecting these particular subdomains. First, safety, patient engagement, care coordination, and clinical care are all NQS goals for which the ESRD QIP has proposed and/or finalized measures. We are attempting to align all CMS quality improvement efforts with the NQS because its patient-centered approach prioritizes measures across our quality reporting and pay-for-performance programs to ensure that the measurement approaches in these programs, as a whole, can make meaningful improvements in the quality of care furnished in a variety of settings. We also believe that adopting an NQS-based subdomain structure for the clinical measures in the ESRD QIP is responsive to stakeholder requests that we align our measurement approaches across HHS programs.

Second, we are proposing to combine the NQS goals of Care Coordination and Patient- and Caregiver-Centered Experience of Care into one subdomain because we believe the two goals complement each other. ''Care Coordination'' refers to the NQS goal of promoting effective communication and coordination of care. ''Patient- and Caregiver-Centered Experience of Care'' refers to the NQS goal of ensuring that each patient and family is engaged as a partner in care. In order to engage patients and families as partners, we believe that effective communication and coordination of care must coexist, and that patient and family engagement cannot occur independently of effective communication and care coordination. We therefore believe that it is appropriate to combine measures of care coordination with those of patient and family engagement for the purposes of calculating a facility's clinical measure domain score.

For PY 2018 and future payment years, we propose to include the following measures in the following subdomains of the proposed clinical measure domain (see Table 30):

TABLE 30—PROPOSED SUBDOMAINS IN THE CLINICAL MEASURE DOMAIN

Subdomain	Measures and measure topics
Safety Subdomain	NHSN Bloodstream Infection measure.
Patient and Family Engagement/Care Coordination Subdomain	ICH CAHPS measure. SRR measure.
Clinical Care Subdomain	STrR measure. Dialysis Adequacy measure topic. Vascular Access Type measure topic. Hypercalcemia measure.

We seek comments on these proposals to adopt a Clinical Measure Domain that includes three subdomains (safety, patient and family engagement/care coordination, and clinical care) for the purpose of calculating a facility's clinical measure domain score for PY 2018.

In deciding how to weight the proposed subdomains that comprise the clinical measure domain score, we took the following considerations into account: (1) the number of measures and measure topics in a proposed subdomain; (2) how much experience facilities have had with the measures and measure topics in a proposed subdomain; and (3) how well the measures align with CMS's highest priorities for quality improvement for patients with ESRD. Because the proposed Clinical Care subdomain contains the largest number of measures, and facilities have the most experience with the measures in this subdomain, we are proposing to weight the Clinical Care subdomain significantly higher than the other subdomains. Facilities have more experience with the NHSN Bloodstream Infection measure in the proposed Safety subdomain than they do with the SRR measure in the proposed Patient and Family Engagement/Care Coordination subdomain, but we are proposing to include a larger number of measures in the Patient and Family Engagement/Care Coordination subdomain. We are proposing to give the Patient and Family Engagement/Care Coordination subdomain slightly more weight than the Safety subdomain, because it includes two measures, whereas only one measure appears in the proposed Safety subdomain. In future rulemaking, we will consider revising these weights based on facility experience with the measures contained within these proposed subdomains.

For these reasons, we propose the following weights for the three subdomains in the clinical measure domain score for PY 2018:

Subdomain	Weight in the clinical measure domain score (%)
Safety	20
Patient and Family Engagement/Care Coordination	30
Clinical Care	50

We seek comments on this proposal.

In deciding how to weight measures and measure topics within a proposed subdomain, we took into account the same considerations we considered when deciding how to weight the proposed subdomains. Because the NHSN Bloodstream Infection clinical measure is the only measure in the proposed Safety subdomain, we are proposing to assign the entire subdomain weight to that measure. We additionally note that improving patient safety and reducing bloodstream infections in patients with ESRD is one of our highest priorities for quality improvement, so we believe it is appropriate to weight the NHSN Bloodstream Infection clinical measure at 20 percent of a facility's Clinical Measure Domain Score. Because facilities have substantially more experience with the ICH CAHPS clinical measure, as compared with the SRR clinical measure, we are proposing to give the proposed ICH CAHPS measure twice as much weight as the proposed SRR measure. Additionally, we note that improving patients' experience of care is as high a priority for CMS quality improvement efforts as improving patient safety, so we believe it is appropriate to assign the ICH CAHPS clinical measure the same weight as the NHSN Bloodstream Infection clinical measure. We are proposing to give the Dialysis Adequacy and Vascular Access Type measure topics the most weight in the Clinical Care subdomain because facilities have substantially more experience with these measure topics, as compared to the other measures in the Clinical Care subdomain. We are proposing to assign equal weights to the STrR and Hypercalcemia measures because PY 2018 would be the first program year in which facilities are measured on the STrR measure, and because the clinical significance of the Hypercalcemia measure is diminished in the absence of other information about mineral metabolism (for example, a patient's phosphorus and plasma parathyroid hormone levels), which would provide a more comprehensive assessment of mineral metabolism (78 FR 72217). For these reasons, we propose to use the following weighting system for calculating a facility's Clinical Measure domain score:

Measures/measure topics by subdomain	Measure weight in the clinical measure domain score (%)
Safety Subdomain	20
NHSN Bloodstream Infection measure	20
Patient and Family Engagement/Care Coordination Subdomain	30
ICH CAHPS measure	20
SRR measure	10
Clinical Care Subdomain	50
STrR measure	7
Dialysis Adequacy measure topic	18
Vascular Access Type measure topic	18
Hypercalcemia measure	7

We seek comments on this proposal for weighting individual measures within the Clinical Measure Domain.

7. Proposal for Calculating the Reporting Measure Domain Score, the Reporting Measure Adjuster, and the TPS for the PY 2018 ESRD QIP

Starting with the PY 2014 program, the ESRD QIP has used a scoring methodology in which the clinical measures receive substantially more weight than the reporting measures in the TPS, and the weighting coefficients for the two types of measures total 100 percent of the TPS. We continue to believe it is appropriate to incorporate reporting measure scores in the TPS calculations because ''reporting is an important component in quality improvement'' (76 FR 70274); we also continue to believe that clinical measures should carry substantially more weight than reporting measures because clinical measures ''score providers/facilities based upon actual outcomes'' (76 FR 70275). These statements reflect the fact that clinical and reporting measures serve different functions in the ESRD QIP. Clinical measures provide a direct assessment of the quality of care a facility provides, relative to either the facility's past performance or standards of care nationwide. Reporting measures create an incentive for facilities to monitor significant indicators of health and illness, and they help facilities become familiar with CMS data systems. In addition, they allow the ESRD QIP to collect the robust clinical data needed to establish performance standards for clinical measures.

As we continue to add reporting measures to the ESRD QIP measure set, it becomes increasingly challenging to not weight them so heavily that they dilute the significance of the clinical measures, while still ensuring that we do not weight the reporting measures so lightly that facilities are not incentivized to meet the reporting measure requirements.

Although we considered the possibility of abandoning the use of reporting measures, we determined that this is not feasible because doing so would make it impossible to calculate performance standards for many clinical measures that promise to promote high-quality care. We also considered the possibility of weighting the reporting measures such that each reporting measure comprised a smaller percentage of the TPS. We believe, however, that doing so would result in the reporting measures not carrying enough weight to provide facilities with an incentive to meet the reporting requirements, particularly if additional reporting measures were added to the program. For example, if 5 reporting measures were adopted in the ESRD QIP, and the reporting measures collectively were weighted at 5 percent of a facility's TPS (in order to preserve the significance of the clinical measures), then each reporting measure would only comprise 1 percent of a facility's TPS. Under such conditions, we believe that facilities

may choose not to meet the reporting measure requirements, because not doing so would have a negligible impact on their overall TPS. If enough facilities reached this determination, then we would not be able to establish reliable baselines, should we propose to adopt clinical measure versions of the reporting measures. For these reasons, we are proposing the following scoring methodology for determining the impact of reporting measure scores on a facility's payment reductions.

For PY 2018 and future payment years, we propose to establish a new Reporting Measure Domain. We further propose that a facility's reporting measure domain score will be the sum of all the reporting measure scores that the facility receives. We strive to expand reporting measures into clinical measures in the ESRD QIP as quickly as measure development and administrative processes permit. Therefore, unlike the case with clinical measures in the Clinical Domain Score, we do not intend to continue to use any particular reporting measure in the ESRD QIP for an indefinite period of time. For this reason, we believe that it would be unnecessarily opaque and confusing to group reporting measures into subdomains, as we are proposing for the clinical measures in the Clinical Measure Domain.

Additionally, we propose to establish a Reporting Measure Adjuster (RMA), which will provide the ESRD QIP with an index of facility performance on reporting measures within the Reporting Measure Domain. We propose to use the following general formula to determine a facility's RMA, based on its reporting measure domain score:

$$\left[\text{(available Reporting Measure points)} - \text{(Reporting Measure Domain score)}\right] \times \text{(coefficient } C\text{)}$$

This formula is constructed such that a high RMA is indicative of low performance on the reporting measures, and a low RMA is indicative of high performance. A facility's Reporting Measure Domain score (that is, the sum of its scores on the reporting measures) is subtracted from the total number of points a facility could earn on the reporting measures for which it was eligible. This result is then multiplied by ''C,'' which is a coefficient used to translate reporting measure points into TPS points. As C increases, so too does the TPS ''value'' of a reporting measure point. For example, if C is set to 2, then 1 reporting measure point is worth 2 TPS points. If C is set to 0.5, then 1 reporting measure point is worth one-half of a TPS point. The value of C is in not tied to the number of reporting measures in the ESRD QIP; rather, it represents how much value we place on the reporting measures' contribution to the quality goals of the ESRD QIP. We will use the rulemaking process to set the value for C for each program year.

For the PY 2018 ESRD QIP, we propose to use the following formula to determine a facility's RMA:

$$\left[\text{(eligible Reporting Measure points)} - \text{(Reporting Measure Domain score)}\right] \times 5/6$$

We set coefficient C at five-sixths for the PY 2018 program because each reporting measure point in the PY 2016 program, and the proposed PY 2017 program, is equivalent to five-sixths of a TPS point (that is, 30 points for three reporting measures comprised 25 TPS points). We believe it is important to maintain as much consistency as possible in the transition to the proposed scoring methodology. Therefore, we are proposing that the ''value'' of a reporting measure point in the TPS, as finalized in the PY 2016 program and proposed for the PY 2017 program, will remain constant in PY 2018.

For the reasons described above, we continue to believe that the clinical measures are considerably more important than the reporting measures in the ESRD QIP. We therefore believe that a facility's TPS should be predominantly determined by its Clinical Measure Domain score, and that a facility's TPS should be downwardly adjusted in the case of noncompliance with the reporting measure requirements. The RMA, as described above, is constructed such that a high RMA value indicates low reporting measure scores and a low RMA value indicate high reporting measure scores. As a result, a facility's TPS would be entirely determined by its Clinical Measure Domain score if it receives full credit on the reporting measures; the TPS would be slightly decreased if the facility received high (but not perfect) scores on the reporting measures; and the TPS would be significantly decreased if it performed poorly on the reporting measures. For these reasons, we propose to calculate a facility's TPS by subtracting the facility's RMA from its Clinical Measure Domain score. Additionally, we propose to continue our policy to require a facility to be eligible for a score on at least one reporting and one clinical measure in order to receive a TPS (78 FR 72217).

In an effort to estimate the impact of this proposed change for the ESRD QIP's scoring methodology, we conducted an analysis of how the proposed scoring methodology affected payment reduction distributions, based on data from CY 2012 and CY 2013. This analysis compared the scoring methodology proposed in this section and the previous section to the scoring methodology finalized for the PY 2016 program. In order to ensure that the analysis reliably estimated the impact on facilities' payment reductions, the proposed scoring methodology and the methodology finalized for the PY 2016 program were each applied to the PY 2016 measure set. The full analysis is available at: *http://www.cms.gov/Medicare/Quality-Initiatives-Patient-Assessment-Instruments/ESRDQIP/061_TechnicalSpecifications.html*. The results of this analysis are presented below in Table 31.

TABLE 31—EXPECTED IMPACT OF PROPOSED SCORING METHODOLOGY ON THE DISTRIBUTION OF PAYMENT REDUCTIONS, USING MEASURES AND MEASURE WEIGHTS FINALIZED FOR THE PY 2016 ESRD QIP AND DATA FROM CY 2012 AND CY 2013

Payment reduction (%)	Finalized scoring methodology for PY 2016, applied to measures and measure weights finalized in the PY 2016 program		Proposed scoring methodology for PY 2018, applied to measures and measure weights finalized in the PY 2016 program	
	Number of facilities	Percent	Number of facilities	Percent
0	4,828	79.4	4,606	75.7
0.5	884	14.5	739	12.2
1.0	242	4.0	306	5.0
1.5	69	1.1	108	1.8
2.0	59	1.0	323	5.3

As illustrated in Table 31, we expect that 4.3 percent more facilities (222 overall) would receive a payment reduction under the proposed methodology for PY 2018, as compared with the scoring methodology that we will use for the PY 2016 program. We therefore believe that adopting the scoring methodology proposed in this section and the previous section will not appreciably change the distribution of facility payment reductions, as is our intention.

We seek comments on these proposals for calculating a facility's reporting measure domain score, to calculate the RMA, and to determine the TPS.

Although we believe advantages are afforded by adopting the scoring methodology proposed in this section and the previous section, we also recognize that there may be advantages associated with maintaining consistency with previous years' scoring methodology. Accordingly, as an alternative to the scoring methodology proposed in this section and the previous section, we are also seeking public comments on whether we should continue to use the same methodology we currently use to weight measures in the ESRD QIP and calculate a facility's TPS, with the exception that the clinical and reporting measures would be weighted at 90 percent and 10 percent, respectively, of a facility's TPS.

8. Example of the Proposed PY 2018 ESRD QIP Scoring Methodology

In this section, we provide an example to illustrate the proposed scoring methodology for PY 2018 and future payment years. Figures 3–7 illustrate how to calculate the clinical measure domain score, the reporting measure domain score, the RMA, and the TPS. Note that for this example, Facility A, a hypothetical facility, has performed very well. Figure 1 illustrates the general methodology used to calculate domain scores for the clinical measure domain, as well as the example calculations for Facility A.

Figure 3

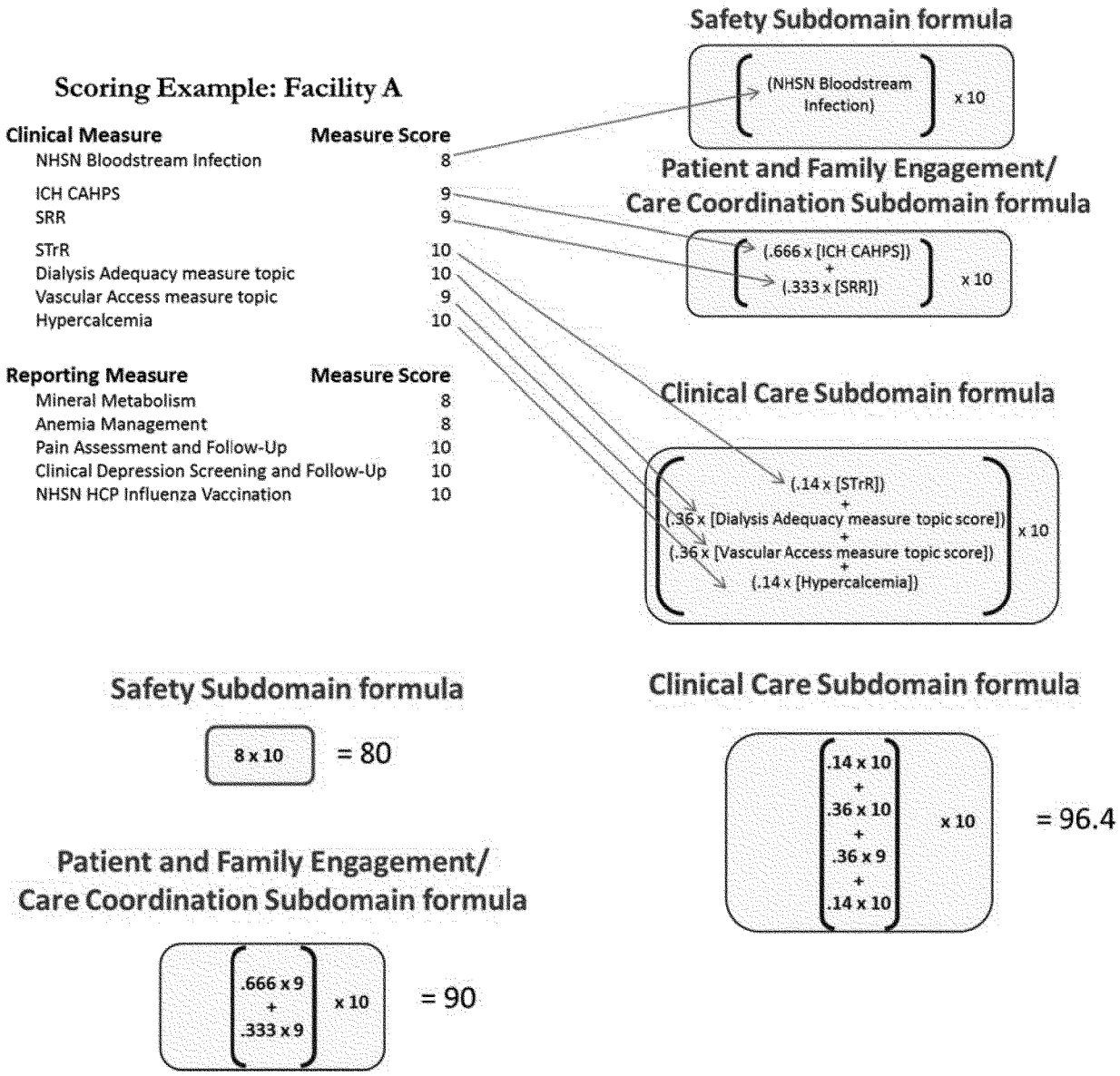

Figure 2 illustrates the general methodology for weighting subdomains in the clinical measure domain, as well as the example calculations for Facility A's clinical measure domain score.

Figure 4

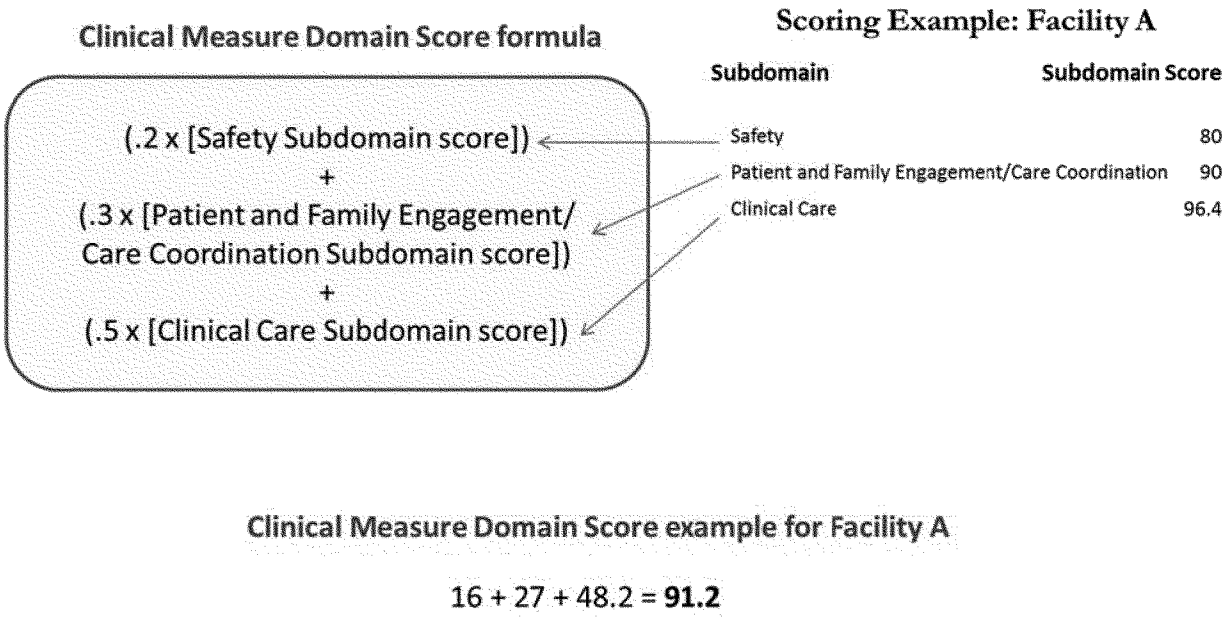

Figure 3 illustrates the general methodology for calculating a facility's reporting measure domain score, as well as the example calculations for Facility A.

Figure 5

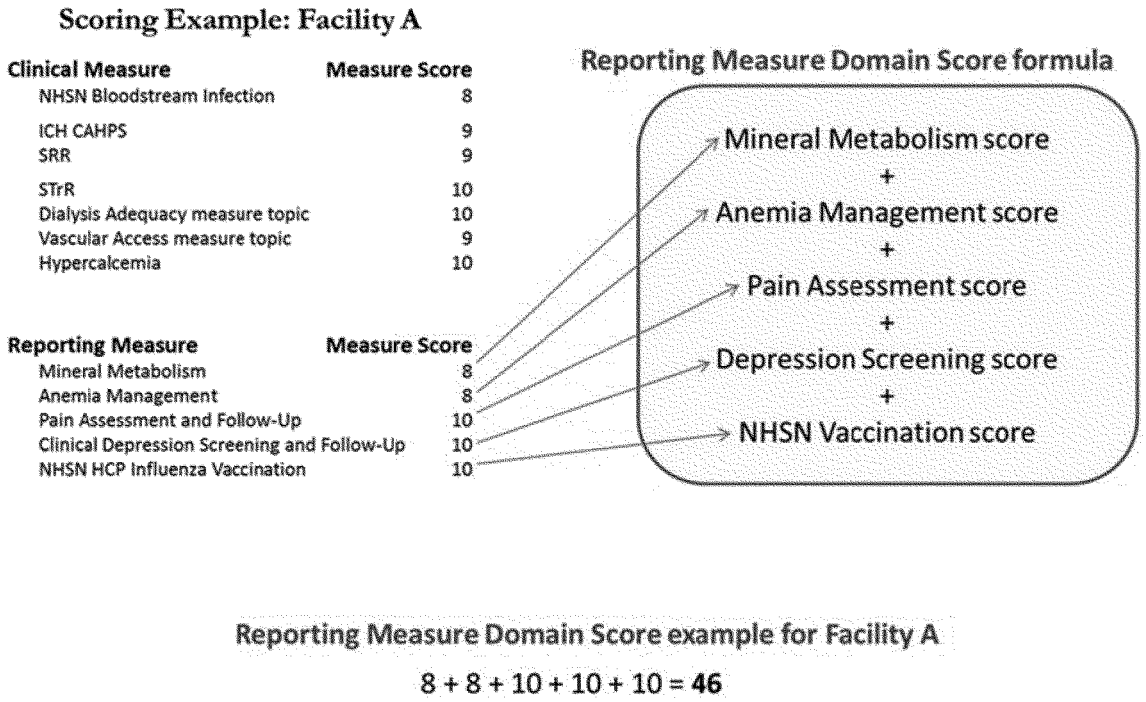

Figure 4 illustrates the general methodology for calculating a facility's RMA, as well as the example calculations for Facility A.

Figure 6

Reporting Measure Adjuster formula

$$\left[\text{(eligible Reporting Measure points)} - \text{(Reporting Measure Domain score)}\right] \times 5/6$$

Reporting Measure Adjuster example for Facility A

$$(50 - 46) \times (5/6) = \mathbf{3.3}$$

Figure 5 illustrates the general methodology for calculating a facility's TPS, as well as the example calculations for Facility A.

Figure 7

TPS formula

$$\text{(Clinical Measure Domain Score)} - \text{(Reporting Measure Adjuster)}$$

TPS example for Facility A

$$91.2 - 3.3 = 87.9, \text{ rounded to } \mathbf{88}$$

9. Proposed Payment Reductions for the PY 2018 ESRD QIP

Section 1881(h)(3)(A)(ii) of the Act requires the Secretary to ensure that the application of the scoring methodology results in an appropriate distribution of payment reductions across facilities, such that facilities achieving the lowest TPSs receive the largest payment reductions. For the same reasons described in Section III.F.8 above, we propose that a facility would not receive a payment reduction for PY 2018 if it achieves a minimum TPS that is equal to or greater than the total of the points it would have received if:

- It performed at the performance standard for each clinical measure;
- It received the number of points for each reporting measure that corresponds to the 50th percentile of facility performance on each of the PY 2016 reporting measures.

The PY 2016 program is the most recent year for which we will have calculated final measure scores before the beginning of the proposed performance period for PY 2018 (i.e., CY 2016). Because we have not yet calculated final measure scores, we are unable to determine the 50th percentile of facility performance on the PY 2016 reporting measures. We will publish that value in the CY 2016 ESRD PPS final rule once we have calculated final measure scores for the PY 2016 program.

We seek comments on this proposal.

Section 1881(h)(3)(A)(ii) of the Act requires that facilities achieving the lowest TPSs receive the largest payment reductions. In the CY 2014 ESRD PPS Final Rule (78 FR 72223 through 72224), we finalized a payment reduction scale for PY 2016 and future payment years: For every 10 points a facility falls below the minimum TPS, the facility would receive an additional 0.5 percent reduction on its ESRD PPS payments for PY 2016 and future payment years, with a maximum reduction of 2.0 percent. We are not proposing any changes to this policy at this point.

Because we are not yet able to calculate the performance standards for each of the clinical measures, we are also not able to calculate a proposed minimum TPS at this time. We will publish the minimum TPS, based on data from CY 2014 and the first part of

CY 2015, in the CY 2016 ESRD PPS Final Rule.

We seek comments on this proposal.

H. Future Considerations for Stratifying ESRD QIP Measures for Dual-Eligible Beneficiaries

CMS recognizes that individuals with both Medicare and Medicaid (also known as ''dual-eligible beneficiaries''), comprise a relatively large proportion of Medicare enrollees with ESRD. Because ESRD programs have a long history of performance measurement linked with public reporting, and because there are a large number of dual-eligible beneficiaries receiving ESRD care, we are considering stratifying ESRD QIP measures for Medicare-Medicaid enrollees.

Measure reporting under the ESRD QIP does not currently allow us to separately review results for dual-eligible beneficiaries or compare those results with results achieved by other patients with ESRD, so it is not currently known if their experiences are better, worse, or the same as other patients. Even the basic demographics of dual-eligible beneficiaries receiving ESRD care are not well understood. After discussion of the pros and cons that included input from the ESRD provider community, the Measures Application Partnership's dual-eligible workgroup recommended that CMS take the first step in exploring the feasibility of requiring facilities to separately report ESRD QIP measures for Medicare-Medicaid enrollees by analyzing the composition of the dual-eligible beneficiary population receiving ESRD care and determining potential ways in which stratified reporting may further quality improvement efforts. Furthermore, the Measures Application Partnership recommended, in the context of measure development, that CMS explore whether other risk factors unique to the dual-eligible population receiving ESRD care would present significant hurdles to measure stratification along these lines. We are therefore seeking comments on whether it would be feasible to stratify ESRD QIP measures based on whether the beneficiary is a dual eligible. We are interested in whether stakeholders recommend stratification and, if so, for what specific measures stakeholders would find stratification most compelling.

We are particularly interested in public comments on whether Medicare-Medicaid stratified quality measures under the ESRD QIP should be reported publicly, and how we should factor those measures into our scoring methodology. We seek comments on the meaningfulness of stratifying measures, and the feasibility and burden associated with reporting stratified measures.

IV. Technical Corrections for 42 Part 405

In the April 15, 2008, final rule ''Conditions for Coverage for End-Stage Renal Disease Facilities,'' (73 FR 20370) we revised the health and safety standards for Medicare-participating End-Stage Renal Disease (ESRD) facilities. This rule made the first comprehensive revisions to the ESRD Conditions for Coverage (CfCs) since they were adopted in 1976. The original ESRD CfCs at 42 CFR Part 405 Subpart U were deleted and new conditions were issued at 42 CFR Part 494. Subpart U now only addresses certain requirements for ESRD networks.

As a part of these revisions, we intended to delete most of the terms and definitions set out in Part 405 Subpart U, and create new definitions in Part 494. This is discussed in the 2008 final rule and in the corresponding proposed rule (70 FR 6184), and is laid out in the final rule crosswalk (comparing the old CfCs with the new ones) at 73 FR 20451.

While we intended to delete most of the definitions at Part 405 Subpart U, we inadvertently omitted the regulations text that would have made those changes. Subpart U, at § 405.2102, still has 32 definitions, most of them unnecessary and several of them obsolete. This creates confusion for ESRD stakeholders, patients, and suppliers.

We propose to make a technical correction that deletes the outdated terms and definitions at § 405.2102. Specifically, we propose to delete these terms and definitions: agreement, arrangement, dialysis, end-stage renal disease (ESRD), ESRD facility, renal dialysis center, renal dialysis facility, self-dialysis unit, special purpose renal dialysis facility, ESRD service, dialysis service, inpatient dialysis, outpatient dialysis, staff-assisted dialysis, self-dialysis, home dialysis, self-dialysis and home dialysis training, furnishes directly, furnishes on the premises, medical care criteria, medical care norms, medical care standards, medical care evaluation study (MCE), qualified personnel, chief executive officer, dietitian, medical record practitioner, nurse responsible for nursing service, physician-director, and social worker. We also propose to delete the term and definition for ''ESRD network organization,'' as it is duplicated within § 405.2102 as ''network organization.'' We would retain the terms and definitions for ''network, ESRD,'' and ''network organization.'' These changes are also outlined in Table 32 below.''

TABLE 32—TECHNICAL CORRECTIONS TO § 405.2102

Term	Proposed action	Other FR location
Agreement	Delete	
Arrangement	Delete	
Dialysis	Delete	
End-Stage Renal Disease (ESRD)	Delete	406.13(b).
ESRD facility introductory text	Delete	
Renal dialysis center	Delete	
Renal dialysis facility	Delete	494.10.
Self-dialysis unit	Delete	
Special purpose renal dialysis facility	Delete	494.120.
ESRD Network organization	Delete	
ESRD service introductory text	Delete	
Dialysis service	Delete	
Inpatient dialysis	Delete	
Outpatient dialysis	Delete	
Staff-assisted dialysis	Delete	
Self-dialysis	Delete	494.10.
Home dialysis	Delete	494.10.
Self-dialysis and home dialysis training	Delete	

TABLE 32—TECHNICAL CORRECTIONS TO § 405.2102—Continued

Term	Proposed action	Other FR location
Furnishes directly	Delete	494.10.
Furnishes on the premises	Delete	494.180(d)
Medical care criteria	Delete	
Medical care norms	Delete	
Medical care standards	Delete	
Medical care evaluation study (MCE)	Delete	
Network, ESRD	Retain	N/A.
Network organization	Retain	N/A.
Qualified personnel	Delete	
Chief executive officer	Delete	
Dietitian	Delete	494.140(c).
Medical record practitioner	Delete	
Nurse responsible for nursing service	Delete	494.140(b).
Physician-director	Delete	494.140(a).
Social worker	Delete	494.140(d).

V. Methodology for Adjusting DMEPOS Payment Amounts Using Information From Competitive Bidding Programs

A. Background

1. Payment Basis for Certain DMEPOS

Section 1834(a) of the Act governs payment for durable medical equipment (DME) covered under Part B and under Part A for a home health agency and provides for the implementation of a fee schedule payment methodology for DME furnished on or after January 1, 1989. Sections 1834(a)(2) through (a)(7) of the Act set forth separate payment categories of DME and describe how the fee schedule for each of the following categories is established:

- Inexpensive or other routinely purchased items,
- Items requiring frequent and substantial servicing,
- Customized items,
- Oxygen and oxygen equipment,
- Other covered items (other than DME), and
- Other items of DME (capped rental items).

Section 1834(h) of the Act governs payment for prosthetic devices, prosthetics, and orthotics (P&O) and sets forth fee schedule payment rules for P&O. Effective for items furnished on or after January 1, 2002, payment is also made on a national fee schedule basis for parenteral and enteral nutrition (PEN) in accordance with the authority under section 1842(s) of the Act. The term ''enteral nutrition'' will be used throughout this document to describe enteral nutrients supplies and equipment covered as prosthetic devices in accordance with section 1861(s)(8) of the Act and paid for on a fee schedule basis and enteral nutrients under DMEPOS Competitive Bidding Program (CBP), as authorized under section 1847(a)(2)(B) of the Act. Section 1842(o)(1)(D) of the Act mandates that payment for infusion drugs furnished through a covered item of DME on or after January 1, 2004, is equal to 95 percent of the average wholesale price for such drug in effect on October 1, 2003.

For DMEPOS items subject to payment under 1834 of the Act (not subject to the CBP), the Medicare's allowed payment amount is equal to the lesser of the actual charge for the item or the fee schedule amount for the item. The fee schedule amounts are based on average payments made under the previous payment methodology of reasonable charges, which utilized supplier charges for furnishing items and services in local areas throughout the nation to establish the Medicare allowed payment amounts for the items and services. The reasonable charge data used is from a specific period of time that varies slightly by payment class (for example, July 1986 through June 1987 for inexpensive DME). The fee schedule amounts for most items are updated on an annual basis by covered item update factors provided in the statute for DME under section 1834(a)(14) of the Act, for P&O under section 1834(h)(4)(A) of the Act, and for enteral nutrition under section 1842(s)(1)(B) of the Act.

The rules pertaining to the calculation of reasonable charges are located at 42 CFR Part 405, Subpart E of our regulations. Under this general methodology, several factors were taken into consideration in determining the reasonable charge for an item. Each supplier's ''customary charge'' for an item, or the 50th percentile of charges for an item over a 12-month period, was one factor used in determining the reasonable charge. The ''prevailing charge'' in a local area, or the 75th percentile of suppliers' customary charges for the item in the locality, was also used in determining the reasonable charge. For PEN items and services only, the ''lowest charge level (LCL)'' was also taken into consideration and was based on the 25th percentile of all charges for an item. For the purpose of calculating prevailing charges, a ''locality'' is defined at 42 CFR 405.505 and ''may be a State (including the District of Columbia, a territory, or a Commonwealth), a political or economic subdivision of a state, or a group of states.'' The regulation further specifies that the locality ''should include a cross section of the population with respect to economic and other characteristics.'' For PEN items and services only, the entire nation was used as the locality for the purpose of calculating the LCL and prevailing charges.

Effective for items furnished on or after October 1, 1985, an additional factor, the inflation-indexed charge (IIC) as cited at 42 CFR 405.509, was added to the factors taken into consideration in determining the reasonable charge for an item. The IIC is equal to the lowest of the customary charge, prevailing charge, LCL (if applicable), and IIC from the previous year updated by an inflation adjustment factor. To summarize, the reasonable charges for each item that were used to calculate the fee schedule amounts are equal to the lower of:

- the supplier's actual charge on the claim;
- the supplier's customary charge for the item;
- the prevailing charge in the locality for the item;
- the LCL in the locality for the item, if applicable; or
- the IIC.

Under the reasonable charge payment methodology, it is assumed that suppliers took all of their costs of

furnishing various items and services in various localities throughout the nation into account in setting the prices they charge for covered items and services.

We implemented the fee schedule payment methodologies for PENs at 42 CFR Part 414, Subparts C, and for DME prosthetic devices, prosthetics, orthotics, and surgical dressings at 42 CFR Part 414, Subpart D of our regulations. In accordance with section 1834(a)(10) of the Act, the Secretary may adjust DMEPOS fee schedule amounts in situations where it is determined that the amounts are not inherently reasonable. This ''inherent reasonableness'' authority for adjusting fee schedule payment amounts is governed by paragraphs (8) and (9) of section 1842(b) of the Act and implemented at 42 CFR Part 405, Subpart E of our regulations. Finally, in the case of DMEPOS furnished on or after January 1, 2011, under section 1834(a)(1)(F)(ii) of the Act, the Secretary may (in beginning January 1, 2016, must) use information on the payment determined under the CBP in accordance with section 1847 of the Act to adjust the fee schedule payment amounts for DME that are not in a competitive bidding area (CBA), and the inherent reasonableness authority does not apply. Adjustment of fee schedule amounts based on CBP payment information (and the limitation on using inherent reasonableness) is also authorized under section 1834(h)(1)(H)(ii) of the Act for certain orthotics and section 1842(s)(3)(B) of the Act for enteral nutrition in non-competitive bid areas.

2. Fee Schedule Payment Methodologies

Section 4062(b) of the Omnibus Budget Reconciliation Act of 1987 (OBRA 87), Public Law 100–203, added section 1834(a) of the Act and mandated the implementation of local fee schedule amounts in 1989 for DME and P&O based on the average of reasonable charges for items and services furnished in carrier service areas throughout the United States. The carriers were (now Medicare administrative contractors) responsible for processing claims for Part B items and services in accordance with section 1842(a) of the Act. The carrier service areas used in establishing the fee schedule amounts could not exceed an entire state. A few states were made up of two carrier service areas and the State of New York had three carrier service areas. A carrier service area is not to be confused with a locality established for the purpose of calculating reasonable charges as described above. For example, although claims for items furnished in the State of Texas were processed by a single carrier, for reasonable charge calculation purposes, Texas was divided into more than 50 different localities. In 1993, the local fee schedule amounts for states with more than one carrier service areas were transitioned to statewide fee schedule amounts. The reasonable charge data used to calculate the statewide fee schedule amounts therefore reflected the average payment made under the supplier charge based reasonable charge payment methodology for items and services furnished throughout the state, including both rural and urban areas of the state.

Section 4062(b) of OBRA 87 mandated that local fee schedule amounts for both DME and P&O be transitioned to regional fee schedule amounts as part of a multi-year phase in ending in 1993. Section 4152(b) of the Omnibus Budget Reconciliation Act of 1990 (OBRA 90), Public Law 101–508, eliminated the regional fee schedule transition for DME and amended section 1834(a) of the Act to mandate that the local (statewide) fee schedule amounts be limited by a national ceiling (upper) limit, based on the median of the statewide fee schedule amounts, and a national floor (lower limit), based on 85 percent of the median of the statewide fee schedule amounts. The fee schedule ceiling and floor limits for DME were phased in from 1991 through 1993. The conversion to regional fee schedule amounts therefore never took place for DME and instead the statewide fee schedule amounts were limited so that they could not vary by more than 15 percent from the national ceiling to the national floor. The fee schedule amounts for areas outside the contiguous United States are not subject to the national ceiling and floor limits. The transition to regional fee schedule amounts was retained for P&O, although OBRA 90 changed the phase in schedule so that the regional fee schedule amounts were not fully phased in until January 1, 1994, rather than January 1, 1993. As explained in more detail below, the regional fee schedule methodology allows for regional geographic variation in fee schedule payment amounts and a wider range in fees across the nation than the fee schedule methodology used for DME which caps the local, statewide fee schedule amounts at the national median. That being said, we have not seen any problems associated with access to either P&O or DME in rural areas or any areas of the country since payments have been made based on these fee schedule methodologies. This has been the case even though the average reasonable charges used to compute the statewide fee schedule amounts include a comingling of reasonable charge data for items and services furnished in both urban and rural areas. In addition, we have not seen any problems with access to PEN in rural areas or any areas of the country since payments have been made based on national fee schedule amounts.

3. Regional Fee Schedule Payment Methodology for P&O

The regional fee schedules for P&O are mandated by section 1834(h)(2)(B) of the Act. The regional fee schedule amounts only apply to areas within the contiguous United States. The regional fee schedule amounts are calculated based on the weighted average (weighted by total Part B claims volume) of statewide fee schedule amounts for states in each of the ten CMS Regional Office boundaries identified below. The statewide fee schedule amounts are based on average reasonable charges (statewide fees) for items furnished from July 1, 1986 through June 30, 1987.

The ten CMS Regional Office boundaries are:

- Boston (Region One), including the six states of Connecticut, Maine, Massachusetts, New Hampshire, Rhode Island and Vermont;
- New York (Region Two), including the two states of New Jersey and New York;
- Philadelphia (Region Three), including the five states of Delaware, Maryland, Pennsylvania, Virginia, West Virginia and the District of Columbia;
- Atlanta (Region Four), including the eight states of Alabama, North Carolina, South Carolina, Florida, Georgia, Kentucky, Mississippi, and Tennessee;
- Chicago (Region Five), including the six states of Illinois, Indiana, Michigan, Minnesota, Ohio and Wisconsin;
- Dallas (Region Six), including the five states of Arkansas, Louisiana, New Mexico, Oklahoma and Texas;
- Kansas City (Region Seven), including the four states of Iowa, Kansas, Missouri and Nebraska;
- Denver (Region Eight), including the six states of Colorado, Montana, North Dakota, South Dakota, Utah and Wyoming;
- San Francisco (Region Nine), including the three states of Arizona, California and Nevada; and
- Seattle (Region Ten), including the three states of Idaho, Oregon and Washington.

As an example, the regional fee schedule amounts for Region Nine are based on the weighted average of the

statewide fees for Arizona, California, and Nevada. Since California accounts for the largest volume of Part B claims in the region, the California statewide fees are weighted more heavily in determining the regional fee schedule amounts than the statewide fees for Arizona or Nevada. Once all of the regional fee schedule amounts are established, the regional fee schedule amounts are further limited by a national ceiling equal to 120 percent of the average of the regional fee schedule amounts for all the states and a national floor equal to 90 percent of the average of the regional fee schedule amounts for all the states.

The national ceiling and floor limits for DME and P&O set national parameters on how much the statewide or regional fee schedule amounts can vary. For DME, the upper payment limit or ceiling is based on the national median of the statewide fees, essentially bringing half of the state fees down to the national median. The lower limit or floor is based on 85 percent of the national median and brings those state fees below the floor amount up to the floor amount. In contrast, the national ceiling and floor parameters for P&O are based on 120 percent and 90 percent, respectively, of the average of the various regional fee schedule amounts. Differences in reasonable charge based fees in various geographic regions of the country are maintained within the parameters of the national ceilings and floors for P&O.

4. DMEPOS Competitive Bidding Programs Payment Rules

Section 1847(a) of the Act, as amended by section 302(b)(1) of the Medicare Prescription Drug, Improvement, and Modernization Act of 2003 (MMA) (Pub. L. 108–173), requires the Secretary to establish and implement CBPs in CBAs throughout the United States for contract award purposes for the furnishing of certain competitively priced DMEPOS items and services. The programs mandated by section 1847(a) of the Act are collectively referred to as the ''Medicare DMEPOS Competitive Bidding Program.'' Section 1847(a)(2) of the Act provides that the items and services to which competitive bidding applies are:

- Off-the-shelf (OTS) orthotics for which payment would otherwise be made under section 1834(h) of the Act;
- Enteral nutrients, equipment and supplies described in section 1842(s)(2)(D) of the Act; and
- Certain DME and medical supplies, which are covered items (as defined in section 1834(a)(13) of the Act) for which payment would otherwise be made under section 1834(a) of the Act.

The DME and medical supplies category includes items used in infusion and drugs (other than inhalation drugs) and supplies used in conjunction with DME, but excludes class III devices under the Federal Food, Drug, and Cosmetics Act and Group 3 or higher complex rehabilitative power wheelchairs and related accessories when furnished with such wheelchairs. Sections 1847(a) and (b) of the Act specify certain requirements and conditions for implementation of the Medicare DMEPOS CBP.

On July 15, 2008, the Medicare Improvements for Patients and Providers Act (MIPPA) was enacted. Section 154 of the MIPPA amended section 1847 of the Act to make certain limited changes to the Medicare DMEPOS CBP, including a revised timeframe for phasing in the programs.

On March 23, 2010, the Affordable Care Act was enacted. Section 6410(a) of the Affordable Care Act amended section 1847(a)(1) of the Act, mandating the phase in of 21 additional Metropolitan Statistical Areas (MSAs).

Section 1847(a) of the Act requires that the DMEPOS CBP be phased in so that competition under the programs occurs in 9 of the largest Metropolitan Statistical Areas (MSAs) in 2009, 91 additional large MSAs in 2011, and additional areas after 2011 (or, in the case of national mail order for items and services, after 2010). Section 1847(a)(1)(D)(ii) of the Act provides discretion to subdivide MSAs and through notice and comment rulemaking we subdivided the New York-Northern New Jersey-Long Island, NY-NJ-PA; Los Angeles-Long Beach-Santa Ana, CA; and Chicago-Naperville-Joliet, IL-IN-WI MSAs. The final rule was published in the **Federal Register** on November 29, 2010 (75 FR 73454) and divided the New York-Northern New Jersey-Long Island, NY-NJ-PA MSA into six CBAs. In addition, the Los Angeles-Long Beach-Santa Ana, CA MSA was divided into two CBAs and the Chicago-Naperville-Joliet, IL-IN-WI MSA was divided into four CBAs (75 FR 73460). Altogether this created a total of 100 CBAs for the competitions occurring in the 91 MSAs in 2011, or a total of 109 CBAs for the competitions occurring in 100 MSAs in 2009 and 2011.

Finally, section 1847(a)(1)(D)(iii) of the Act specifies that competitions occurring before 2015 for items and services other than national mail order, may not include rural areas or MSAs with a population of less than 250,000.

In addition to the national mail order program for diabetic supplies, the product categories (PCs) that have been phased in thus far in 100 Round 2 CBAs and 9 Round 1 CBAs include the following:

Round 2 CBAs (Contract Period July 1, 2013, Thru June 30, 2016)

- Oxygen, oxygen equipment, and supplies
- Standard (Power and Manual) wheelchairs, scooters, and related accessories
- Enteral nutrients, equipment, and supplies
- Continuous Positive Airway Pressure (CPAP) devices and Respiratory Assist Devices (RADs) and related supplies and accessories
- Hospital beds and related accessories
- Walkers and related accessories
- Negative Pressure Wound Therapy pumps and related supplies and accessories
- Support surfaces (Group 2 mattresses and overlays)

Round 1 CBAs (Contract Period January 1, 2014, Thru December 31, 2016)

- Respiratory Equipment and Related Supplies and Accessories
  - includes oxygen, oxygen equipment, and supplies; CPAP devices and RADs and related supplies and accessories; and standard nebulizers
- Standard Mobility Equipment and Related Accessories
  - includes walkers, standard power and manual wheelchairs, scooters, and related accessories
- General Home Equipment and Related Supplies and Accessories
  - includes hospital beds and related accessories, group 1 and 2 support surfaces, transcutaneous electrical nerve stimulation (TENS) devices, commode chairs, patient lifts, and seat lifts
- Enteral Nutrients, Equipment and Supplies
- Negative Pressure Wound Therapy Pumps and Related Supplies and Accessories
- External Infusion Pumps and Supplies

In addition, contracts and SPAs were in effect in the 9 Round 1 CBAs from January, 1 2011 thru December 31, 2013, for the items listed below which are not included in current Round 1 or 2 PCs:

- Complex Rehabilitative Power Wheelchairs and Related Accessories (Group 2)
- Adjustable Wheelchair Seat Cushions

5. Adjusting Payment Amounts Using Information From the DMEPOS Competitive Bidding Program

Section 1834(a)(1)(F)(ii) of the Act provides authority for using information from the DMEPOS CBPs to adjust the DME payment amounts for covered items furnished on or after January 1, 2011, in areas where competitive bidding is not implemented for the items. Similar authority exists at section 1834(h)(1)(H)(ii) of the Act for OTS orthotics, and at section 1842(s)(3)(B) of the Act for enteral nutrition. Section 1834(a)(1)(F) also requires adjustments to the payment amounts for all DME items subject to competitive bidding furnished in areas where CBPs have not been implemented on or after January 1, 2016.

For items furnished on or after January 1, 2016, section 1834(a)(1)(F)(iii) requires us to continue to make such adjustments to DME payment amounts where CBPs have not been implemented, as additional covered items are phased in or information is updated as contracts are recompeted.

Section 1834(a)(1)(G) of the Act requires that the methodology used to adjust payment amounts for DME and OTS orthotics using information from the CBPs be promulgated through notice and comment rulemaking, which is the purpose of this proposed rule. Section 1834(a)(1)(G) of the Act also requires that we consider the ''costs of items and services in areas in which such provisions [sections 1834(a)(1)(F)(ii) and 1834(h)(1)(H)(ii)] would be applied compared to the payment rates for such items and services in competitive acquisition [competitive bidding] areas.'' We are proposing to apply the same methodology for making adjustments to the payment amounts for enteral nutrition as authorized by section 1842(s)(3)(B) of the Act.

6. Diversity of Costs

As mentioned above, under section 1834(a)(1)(G) of the Act we must consider the costs of furnishing items and services in areas where prices will be adjusted compared to the payment rates for the items and services furnished in CBAs. We believe that the methodology for using the single payment amounts (SPAs) as a basis for adjusting payment rates in other areas needs to ensure that adjusted payment amounts in an area are adequate to cover the unique costs of furnishing the items and services in those areas.

The SPAs are based on the median of successful bids for furnishing items and services in MSAs, which are mainly urban areas, from suppliers with costs and characteristics that may or may not be similar to suppliers in other areas. In addition, under the DMEPOS CBP, many low population density areas within MSAs were excluded from the CBAs as authorized by statute, making the geographic bidding areas smaller and more densely populated than they would have been if the initial MSA boundaries had been retained for bidding purposes.

Regarding the size of suppliers submitting the bids used to generate the SPAs compared to the size of suppliers in areas where price adjustments based on the SPAs would occur, it is important to note that small suppliers are given special considerations under the CBP and that a majority of contracts are offered to small suppliers. Section 1847(b)(6)(D) of the Act requires that, in developing procedures relating to bidding and the awarding of contracts, CMS ''take appropriate steps to ensure that small suppliers of items and services have an opportunity to be considered for participation in the program.'' We have established a number of provisions to ensure that small suppliers are given an opportunity to participate in the DMEPOS CBP. For example, under 42 CFR 414.414(g)(1)(i), we have established a 30 percent target for small supplier participation; thereby, ensuring efforts are made to award at least 30 percent of contracts to small suppliers. Also, CMS worked in coordination with the Small Business Administration (SBA) to develop an appropriate definition of a ''small supplier'' for this program. Under 42 CFR 414.402, a small supplier is one that generates gross revenues of $3.5 million or less in annual receipts, including Medicare and non-Medicare revenue. Under 42 CFR 414.418, small suppliers may join together in ''networks'' in order to submit bids that meet the various program requirements. For contracts taking effect on July 1, 2013 in Round 2, in 100 CBAs throughout the country, 63 percent of all contract suppliers are small suppliers, with only 10 percent of contract suppliers being new to the areas. In addition, for contracts taking effect on January 1, 2014 in the Round 1 Recompete, in the 9 initial CBAs, 58 percent of all contract suppliers are small suppliers, with only 3 percent of contract suppliers being new to the areas. Therefore, the majority of bids used in establishing the SPAs come from small suppliers with a history of furnishing the items in the CBAs.

Prior to awarding contracts, each supplier is carefully screened to ensure that it is accredited under applicable Medicare quality standards and meets rigid financial standards, specific Medicare supplier enrollment requirements, and applicable state licensing standards. Each bid is screened to ensure that it is a bona fide bid, and those that fail are excluded from the competition. Approximately 94 percent of bids screened as part of the Round 2 and Round 1 Recompete competitions were determined to be bona fide. The invoices and purchase orders submitted by bidding suppliers to support their bids reflected prices already paid by the supplier (that is, prior to becoming a contract supplier) and for the most part did not reflect large volume purchasing discounts. Once non-bona fide bids are excluded, suppliers are ranked in order based on bid amounts, and the median of bids from the number of suppliers determined to be necessary to meet projected demand are used to establish the SPAs. The projected demand for items and services in a CBA is intentionally overstated for the purpose of ensuring that contracts are awarded to more than a sufficient number of suppliers to serve the beneficiaries in the area. The establishment of the demand level is explained in detail in the competitive bidding final rule (Medicare Program; Competitive Acquisition for Certain DMEPOS and Other issue) published April 10, 2007 (72 FR 18039). Thus, the SPAs are higher than they would otherwise be if demand was not overstated because the high demand generally results in an increase in the number of contract suppliers which in most cases increases the median bid amount. CMS also conducts its review of supplier capacity and expansion plans during the bid evaluation process. If a supplier is new to an area, new to a PC, or submits estimated capacity that represents substantial growth over current levels, CMS may conduct a more detailed evaluation of that supplier's expansion plan to verify the supplier's ability to provide items and services in the CBA on day one of the contract period. If a bidder's financial data and expansion plan do not support the supplier's estimated capacity, CMS will adjust the capacity to the supplier's historic level, which would be zero for a new supplier. CMS uses the estimated capacity information and the bid amounts to determine the array of winning suppliers in a CBA.

Under Round 2 and the Round 1 Recompete competitions, 92 percent of suppliers accepted contract offers at the SPAs set through the competitions. In addition, CMS reviewed all contract

suppliers based on financial standards when evaluating their bids. This process includes review of tax records, credit reports, and other financial data, which leads to the calculation of a score, similar to processes used by lenders when evaluating the viability of a company. All contract suppliers met the financial standards established for the program.

From January 1, 2011, when the initial Round 1 contracts and SPAs took effect, to present, we have seen no indication that beneficiaries have been denied access to necessary items and services subject to the programs in CBAs as a result of the SPAs. In addition, we have been closely monitoring inquiries as well as real time claims and health outcomes data and have seen no negative impacts on access to items and services under the program. Therefore, the SPAs appear to be sufficient to cover the costs of the suppliers furnishing items in the 109 CBAs.

In previous legislation, which we will discuss below, the Congress mandated that the costs of furnishing DME in different geographic regions of the country be studied. Section 135 of the Social Security Act Amendments of 1994, Public Law 103–432, required an examination of the geographic variations in DME supplier costs in order to determine whether the fee schedules are reasonably adjusted to account for any geographic differences. Jing Xing Health and Safety Resources, Inc. provided assistance to the Health Care Financing Administration, now CMS, in conducting this study. The project entitled ''Durable Medical Equipment Supplier Product and Service Cost Study'', was completed under Contract Number HCFA 500–95–0044 and submitted to the agency in June 1996. As part of the study, a Federal Advisory Panel was convened, a formal meeting with representatives of the DME industry was held, and a literature review was conducted. The general consensus among industry representatives and government agencies that participated in the study was that there is no conclusive evidence that urban and rural costs differed significantly or that the costs of furnishing DME items and services were higher in urban areas versus rural areas or vice versa.

The 109 CBAs where competitive bidding has been phased in include a wide range of different size urban areas with surrounding counties, and suppliers take the costs of furnishing items and services in these different areas into account when submitting bids under the programs. They include one CBA (Honolulu, HI) that is not within the contiguous Unites States and CBAs that range in population size from approximately 300 thousand to 10 million (See Table 33). There are 7 CBAs with a population of less than 500,000, 42 CBAs with a population of more than 500,000, but less than 1 million, 27 CBAs with a population of more than 1 million, but less than 2 million, 19 CBAs with a population of 2 to 4 million, and 14 CBAs with a population of over 4 million.

TABLE 33—CBA POPULATION SIZE

CBA	Population
Los Angeles County CBA	9,453,357
Nassau-Brooklyn-Queens-Richmond County Metro CBA	6,630,278
Dallas-Fort Worth-Arlington, TX	6,554,334
Central-Chicago Metro CBA	6,179,455
Houston-Sugar Land-Baytown, TX	6,152,650
Philadelphia-Camden-Wilmington, PA-NJ-DE-MD	5,995,992
Washington-Arlington-Alexandria, DC-VA-MD-WV	5,662,358
Miami-Fort Lauderdale-Pompano Beach, FL	5,604,979
Atlanta-Sandy Springs-Marietta, GA	5,293,136
Boston-Cambridge-Quincy, MA-NH	4,595,431
San Francisco-Oakland-Fremont, CA	4,407,286
Detroit-Warren-Livonia, MI	4,256,579
Phoenix-Mesa-Glendale, AZ	4,251,146
Riverside-San Bernardino-Ontario, CA	4,157,332
Seattle-Tacoma-Bellevue, WA	3,522,509
Northern NJ Metro CBA	3,473,815
Minneapolis-St. Paul-Bloomington, MN-WI	3,326,864
San Diego-Carlsbad-San Marcos, CA	3,118,844
Orange County CBA	3,067,829
Southern NY Metro CBA	3,015,460
Bronx-Manhattan NY CBA	2,983,009
St. Louis, MO-IL	2,844,160
Tampa-St. Petersburg-Clearwater, FL	2,810,479
Baltimore-Towson, MD	2,751,529
Denver-Aurora-Broomfield, CO	2,568,221
Pittsburgh, PA	2,361,317
Portland-Vancouver-Hillsboro, OR-WA	2,259,089
San Antonio-New Braunfels, TX	2,223,779
Orlando-Kissimmee-Sanford, FL	2,176,846
Sacramento-Arden-Arcade-Roseville, CA	2,174,556
Cincinnati-Middletown, OH-KY-IN	2,121,660
Cleveland-Elyria-Mentor, OH	2,074,790
Kansas City, MO-KS	2,050,306
Las Vegas-Paradise, NV	1,967,341
San Jose-Sunnyvale-Santa Clara, CA	1,898,173
Columbus, OH	1,844,571
Charlotte-Gastonia-Rock Hill, NC-SC	1,832,391
Austin-Round Rock-San Marcos, TX	1,813,495
Indianapolis-Carmel, IN	1,764,136
Virginia Beach-Norfolk-Newport News, VA-NC	1,673,547
Nashville-Davidson-Murfreesboro-Franklin, TN	1,607,708

TABLE 33—CBA POPULATION SIZE—Continued

CBA	Population
Providence-New Bedford-Fall River, RI-MA	1,603,029
Milwaukee-Waukesha-West Allis, WI	1,570,548
Suffolk County CBA	1,488,017
South-West-Chicago-Metro CBA	1,464,818
Jacksonville, FL	1,371,407
North East NY CBA Metro	1,363,882
Memphis, TN-MS-AR	1,309,806
Louisville/Jefferson County, KY-IN	1,277,282
Oklahoma City, OK	1,276,642
Richmond, VA	1,262,088
Hartford-West Hartford-East Hartford, CT	1,214,313
Raleigh-Cary, NC	1,190,534
Northern-Chicago Metro CBA	1,187,661
New Orleans-Metairie-Kenner, LA	1,182,382
Salt Lake City, UT	1,158,617
Buffalo-Niagara Falls, NY	1,133,325
Birmingham-Hoover, AL	1,121,219
Rochester, NY	1,062,561
Tucson, AZ	1,004,374
Honolulu, HI	962,112
Fresno, CA	949,093
Tulsa, OK	945,366
Bridgeport-Stamford-Norwalk, CT	922,063
Albuquerque, NM	896,202
Omaha-Council Bluffs, NE-IA	883,233
Albany-Schenectady-Troy, NY	866,077
New Haven-Milford, CT	862,551
Dayton, OH	839,984
Oxnard-Thousand Oaks-Ventura, CA	830,680
Allentown-Bethlehem-Easton, PA-NJ	826,740
El Paso, TX	826,163
Baton Rouge, LA	811,243
Bakersfield-Delano, CA	810,348
Worcester, MA	800,404
McAllen-Edinburg-Mission, TX	799,023
Grand Rapids-Wyoming, MI	783,733
Columbia, SC	767,793
Greensboro-High Point, NC	746,685
Little Rock-North Little Rock-Conway, AR	710,371
North Port-Bradenton-Sarasota, FL	708,687
Indiana-Chicago Metro CBA	706,110
Knoxville, TN	705,446
Springfield, MA	698,926
Akron, OH	687,788
Stockton, CA	685,542
Greenville-Mauldin-Easley, SC	683,793
Charleston-North Charleston-Summerville, SC	682,539
Syracuse, NY	671,076
Poughkeepsie-Newburgh-Middletown, NY	665,524
Colorado Springs, CO	665,484
Toledo, OH	649,956
Wichita, KS	634,116
Boise City-Nampa, ID	634,037
Cape Coral-Fort Myers, FL	631,611
Lakeland-Winter Haven, FL	602,671
Augusta-Richmond County, GA-SC	570,656
Scranton-Wilkes-Barre, PA	556,282
Youngstown-Warren-Boardman, OH-PA	553,382
Palm Bay-Melbourne-Titusville, FL	550,416
Jackson, MS	544,285
Chattanooga, TN-GA	533,309
Deltona-Daytona Beach-Ormond Beach, FL	501,906
Visalia-Porterville, CA	439,968
Flint, MI	435,877
Asheville, NC	434,665
Beaumont-Port Arthur, TX	397,872
Ocala, FL	323,229
Huntington-Ashland, WV-KY-OH	289,474

Source: U.S. Census Bureau, Population Division, 2012 Population Estimates. Population estimates for MSAs and counties were adjusted to reflect CBA boundaries.

7. Advanced Notice of Proposed Rulemaking

CMS issued an Advance Notice of Proposed Rulemaking (ANPRM): Medicare Program; Methodology for Adjusting Payment Amounts for Certain Durable Medical Equipment, Prosthetics, Orthotics, and Supplies (DMEPOS) using Information From Competitive Bidding Programs. The ANPRM was published in the **Federal Register** on February 26, 2014 (79 FR 10754) and solicited comments on several aspects to consider in developing the proposed methodology to adjust DMEPOS fee schedule amounts or other payment amounts in non-competitive areas based on DMEPOS competitive bidding payment information. Specific questions related to this topic were presented in the notice, including:

- Do the costs of furnishing various DMEPOS items and services vary based on the geographic area in which they are furnished?
- Do the costs of furnishing various DMEPOS items and services vary based on the size of the market served in terms of population and/or distance covered or other logistical or demographic reasons?
- Should an interim or different methodology be used to adjust payment amounts for items that have not yet been included in all CBPs (for example, items such as TENS devices that have only been phased into the nine Round 1 areas thus far)?

The comment period for the ANPRM ended on March 28, 2014, and CMS received approximately 185 comments from suppliers, manufacturers, professional, state and national trade associations, physicians, physical therapists, beneficiaries and their caregivers, and one state government office.

Commenters generally agreed that costs do vary by geographic region and that costs in rural and non-contiguous areas are higher than costs in urban areas. However, few commenters offered specific proposals or suggestions for addressing these costs differences and the suggestions that were provided were vague (for example, use the 75th percentile of SPAs rather than the national median SPA). Several commenters stated that the costs of furnishing DMEPOS items and services in different regions of the country do vary. One commenter representing many suppliers said that there exists no reliable cost data. Another commenter representing many manufacturers and suppliers listed several key variables or factors that influence the cost of furnishing items and services in different areas that should be considered, but the commenter did not provide information on how valid and reliable information related to these factors could be obtained. This commenter stated that information of all bids submitted under the programs should also be considered and not just the bids of winning suppliers. Some commenters expressed concern that the SPAs assume a significant increase in volume to offset lower payment amounts. Some commenters suggested that the price adjustments be phased in rather than making full, one-time adjustments.

B. Proposed Provisions

We propose establishing three methodologies for adjusting DMEPOS fee schedule amounts in areas where CBPs have not been established for these items and services based on SPAs established in accordance with the payment rules at § 414.408. Use of SPAs that may be established in accordance with the special payment rules proposed in section V to adjust DMEPOS fee schedule amounts in areas where CBPs have not been established for these items and services would be addressed in future notice and comment rulemaking. One proposed methodology is described in subsection 1 below and would utilize regional adjustments limited by national parameters for items bid in more than 10 CBAs throughout the country. A second proposed methodology is described in subsection 2 below and would be used for lower volume items or other items that were bid in no more than 10 CBAs for various reasons. A third proposed methodology is described in subsection 5 and would be used for mail order items furnished in the Northern Mariana Islands. We are also proposing rules that would apply to all of these proposed methodologies.

1. Proposed Regional Adjustments Limited by National Parameters

CBPs are currently in place in 100 of the largest MSAs in the country for items and services that make up over 80 percent of the total allowed charges for items subject to the DMEPOS CBP. SPAs are currently used in 109 CBAs that include areas in every state throughout the country except for Alaska, Maine, Montana, North Dakota, South Dakota, Vermont, and Wyoming. The number of CBAs, as listed in Table 33 that are fully or partially located within a given state range from one to twelve. The Honolulu CBA was phased in under Round 2 of the program. Suppliers submitting bids for furnishing items and services in these areas have received extensive education that they should factor all costs of furnishing items and services in an area as well as overhead and profit into their bids.

For items and services that are subject to competitive bidding and have been included in more than 10 CBAs throughout the country, we propose to adjust the fee schedule payment amounts for these items and services using a methodology that is modeled closely after the regional fee schedule payment methodology in effect for P&O to allow for variations in payment based on bids for furnishing items and services in different parts of the country. Under the proposed methodology, adjusted fee schedule amounts for areas within the contiguous United States would be determined based on regional SPAs or RSPAs limited by a national floor and ceiling. The RSPA would be established using the average of the SPAs for an item from all CBAs that are fully or partially located in the region. The adjusted payment amount for the item would be equal to its RSPA but not less than 90 percent and not more than 110 percent of the national average, which is the average of the RSPAs weighted by the number of states in the region.

We believe modeling the proposed methodology on the regional fee schedule payment methodology for P&O is appropriate because the regional fee schedule payment methodology for P&O allows for variations in Medicare fee schedule amounts based on supplier charges for furnishing items and services in different regions of the country. The regional fee schedule payment methodology for P&O adjusts the Medicare allowed payments for entire regions of the country, including low population density or rural areas, based primarily on supplier information for furnishing items and services in urban areas. The regional fee schedule payment methodology for P&O has been fully phased in since 1994 in the contiguous United States and has not resulted in any barriers to access since then in any specific region of the country in which it has been applied. The DME and P&O fee schedule amounts are based in a part on statewide average reasonable charges calculated using supplier charges for furnishing items and services in localities throughout each state. Supplier charges for furnishing items in rural areas of the state are combined with charges for furnishing items in urban areas of the state, which represents the bulk of the charges since the vast majority of beneficiaries in each state reside in urban areas rather than rural areas. Although the fee schedule

payments are based heavily on charges for furnishing items and services in urban areas, this has not affected access to items and services in rural areas that are paid based on these fee schedule amounts.

We considered modeling the proposed methodology on the fee schedule payment methodology for DME which establishes an upper limit on all fee schedule amounts based on the median of the state fee schedule amounts; however, this methodology does not allow for regional variations in fee schedule amounts, allows for 0 percent variations in state fee schedule amounts above the national median amount, and only allows for up to 15 percent variation in state fee schedule amounts below the national median amount. The statewide average reasonable charges for DME are updated by an annual covered item update factor and are then limited by a national ceiling and floor based on the median of the statewide amounts and 85 percent of the median of the statewide amounts. The DME fee schedule methodology allows for no variation in payment whatsoever above the national median statewide amount. The maximum variation in fee schedule amounts that is allowed is 15 percent below the national median statewide amount. By contrast, the regional fee schedule methodology for P&O allows for regional variation in fee schedule payment amounts by as much as 10 percent below the national average amount and 20 percent above the national average amount. Similarly, the fee schedules for enteral nutrition are based on national average reasonable charges, and therefore, do not allow for any regional variation in fee schedule amounts. We believe that the model whereby regional fee schedule amounts for P&O are based on supplier charges for furnishing items and services within each region should be adopted when using SPAs to adjust fee schedule payment amounts in a way that reflects bidding in different regions of the country. The regional adjusted amounts are based on supplier bids for furnishing items and services within each region, as explained below.

a. Regional Payment Adjustments

Rather than adjusting state, regional, or national fee schedule amounts or infusion drug payment amounts based on all bids for an item in all CBAs across the country or based on all bids for an item in all CBAs within each state, we propose to adjust the payment amounts based on the average of bids for an item in CBAs that are fully or partially located in different regions of the country. In the first step of the proposed methodology we propose to calculate RSPAs or the average of the SPAs for an item and service in different regions of the country. In keeping with the example established by the P&O regional fee schedule payment methodology, this would allow variation in payment amounts for different regions of the country. For the purpose of establishing the boundaries for the regions, we propose using 8 regions developed for economic analysis purposes by the Bureau of Economic Analysis (BEA) within the Department of Commerce. These regions are proposed based on research and analysis conducted by the BEA indicating that the states in each region share economic ties. Further information can be obtained at *https://www.bea.gov/regional/definitions/nextpage.cfm?key=Regions*.

The information provided at this link states that:

> BEA Regions are a set of Geographic Areas that are aggregations of the states. The following eight regions are defined: Far West, Great Lakes, Mideast, New England, Plains, Rocky Mountain, Southeast, and Southwest. The regional classifications, which were developed in the mid-1950s, are based on the homogeneity of the states in terms of economic characteristics, such as the industrial composition of the labor force, and in terms of demographic, social, and cultural characteristics. For a brief description of the regional classification of states used by BEA, see U.S. Department of Commerce, Census Bureau, Geographic Areas Reference Manual, Washington, DC, U.S. Government Printing Office, November 1994, pp. 6–18;6–19.

Therefore, we propose to revise the definition of *region* in § 414.202 to mean a region developed for economic analysis purposes by the Bureau of Economic Analysis (BEA) within the Department of Commerce for the purpose of calculating regional single payment amounts (RSPAs); the definition of region for the purposes of the P&O regional fee schedule would also continue to apply for those items and services not adjusted based on prices in competitively bid areas. According to the BEA, the regional classifications are based on the homogeneity of the states in terms of economic characteristics, such as the industrial composition of the labor force, and in terms of demographic, social, and cultural characteristics. The contiguous areas of the United States that fall under the 8 BEA regions under our proposal are listed in Table 34 below. Further information can be obtained at *http://www.bea.gov/*.

TABLE 34—BUREAU OF ECONOMIC ANALYSIS REGIONS

Region	Name	States/Areas (count)
1	New England	Connecticut, Maine, Massachusetts, New Hampshire, Rhode Island, and Vermont (6).
2	Mideast	Delaware, District of Columbia, Maryland, New Jersey, New York, and Pennsylvania (6).
3	Great Lakes	Illinois, Indiana, Michigan, Ohio, and Wisconsin (5).
4	Plains	Iowa, Kansas, Minnesota, Missouri, Nebraska, North Dakota, and South Dakota (7).
5	Southeast	Alabama, Arkansas, Florida, Georgia, Kentucky, Louisiana, Mississippi, North Carolina, South Carolina, Tennessee, Virginia, and West Virginia (12).
6	Southwest	Arizona, New Mexico, Oklahoma, and Texas (4).
7	Rocky Mountain	Colorado, Idaho, Montana, Utah, and Wyoming (5).
8	Far West	California, Nevada, Oregon, and Washington (4).

We are soliciting public comments on whether different regional boundaries (e.g. CMS regions or Census Divisions) should be considered that would better reflect potential regional differences in the costs of furnishing items and services subject to the DMEPOS CBP. In addition to the CMS regions listed in section A.3 above, other established regional boundaries include those defined by the United States Census Bureau in the Department of Commerce for the purpose of reporting and analyzing census data. The Census Bureau uses 4 regions that are further divided into 9 divisions. The Census divisions are as follows:

- New England (Division 1); including the 6 states Connecticut, Maine, Massachusetts, New Hampshire, Rhode Island and Vermont.

• Middle Atlantic (Division 2); including the 3 states New Jersey, New York and Pennsylvania.

• East North Central (Division 3); including the 5 states Illinois, Indiana, Michigan, Ohio and Wisconsin.

• West North Central (Division 4); including the 7 states Iowa, Kansas, Minnesota, Missouri, Nebraska, North Dakota and South Dakota.

• South Atlantic (Division 5); including the 9 states Delaware, District of Columbia, Florida, Georgia, Maryland, North Carolina, South Carolina, Virginia and West Virginia.

• East South Central (Division 6); including the 4 states Alabama, Kentucky, Mississippi and Tennessee.

• West South Central (Division 7); including the 4 states Arkansas, Louisiana, Oklahoma, and Texas.

• Mountain (Division 8); including the 8 states Arizona, Colorado, Idaho, Montana, Nevada, New Mexico, Utah and Wyoming.

• Pacific (Division 9); including the 5 states Alaska, California, Hawaii, Oregon and Washington.

Table 35 below lists the states and number of CBAs located in each of the CMS regions, BEA regions, and census divisions.

TABLE 35—STATES AND NUMBER OF CURRENT CBAS PER CMS REGION, BEA REGION, AND CENSUS DIVISION

10 CMS Regions			9 Census Divisions			8 BEA Regions		
Region	States	CBAs	Division	States	CBAs	Region	States	CBAs
Boston	CT, ME, MA, NH, RI, VT.	7	New England	CT, ME, MA, NH, RI, VT.	7	New England	CT, ME, MA, NH, RI, VT.	7
New York	NJ, NY	13	Middle Atlantic	NJ, NY, PA	15	Mideast	DE, DC, MD, NJ, NY, PA.	17
Phila	DE, DC, MD, PA, VA, WV.	9						
Atlanta	AL, FL, GA, KY, MS, NC, SC, TN.	28	South Atlantic	DE, DC, FL, GA, MD, NC, SC, VA, WV.	30	Southeast	AL, AR, FL, GA, KY, LA, MS, NC, SC, TN, VA, WV.	34
			East South Central.	AL, KY, MS, TN	7			
Chicago	IL, IN, MI, MN, OH, WI.	19	East North Central.	IN, IL, MI, OH, WI.	19	Great Lakes	IL, IN, MI, OH, WI.	19
Dallas	AR, LA, NM, OK, TX.	14	West South Central.	AR, LA, OK, TX	13	Southwest	AZ, NM, OK, TX	11
Kansas City	IA, KS, MO, NE	4	West North Central.	IA, KS, MN, MO, NE, ND, SD.	5	Plains	IA, KS, MN, MO, NE, ND, SD.	5
Denver	CO, MT, ND, SD, UT, WY.	3	Mountain	AZ, CO, ID, NM, MT, UT, NV, WY.	8	Rocky Mountain	CO, ID, MT, UT, WY.	4
San Fran	AZ, CA, NV	16	Pacific	CA, OR, WA	15	Far West	CA, NV, OR, WA	16
Seattle	ID, OR, WA	3						

The regional fee schedule amounts for P&O are based on the average of the statewide fees for P&O, weighted by total Part B claims for paid claims with dates of service from July 1, 1991, thru June 30, 1992, which results in fees for states with a greater volume of Part B claims having more influence on the regional fee schedule amounts than states with a smaller volume of Part B claims. We believe this aspect of the regional fee schedule payment methodology for P&O tends to favor more heavily populated states. The statewide fees for larger, more urban states where the most Medicare claims are processed, for example, Massachusetts for Region 1, play a larger role in determining the regional price than the statewide fees for smaller, more rural states in the region, for example, Vermont. Table 36 below shows the relative weighs applied to the statewide fees used in calculating the regional P&O fees for the CMS Boston Region or Region 1.

TABLE 36—P&O REGIONAL FEE WEIGHTS—CMS REGION 1 (BOSTON) (WEIGHTED BY TOTAL PAID CLAIMS FOR DATES OF SERVICE FROM JULY 1, 1991, THRU JUNE 30, 1992)

State	Total part B claims	Percent of total for Region
MA	11,710,121	48%
CT	6,288,638	26%
RI	2,251,892	9%
ME	2,012,385	8%
NH	1,571,936	6%
VT	759,242	3%
Region	24,594,214	

As can be seen in this table, the regional P&O fees for the Boston Region are weighted heavily in favor of the statewide fees and average reasonable charges from 1986/87 for the more heavily populated urban states of Massachusetts and Connecticut with a greater utilization of Part B items and services, whereas the fees for more rural States like Vermont and Maine have a very minor impact in determining the regional fees. In contrast, we are proposing that the RSPAs be calculated based on a simple average of the SPAs for CBAs in each region, without weighting in favor of larger, more heavily populated CBAs. Using the New England BEA Region that is comprised of the same 6 states that make up the CMS Boston Region as an example, the proposed RSPA for this region would be based on the average of the SPAs for the following 7 CBAs, with estimated 2012 population in parentheses:

• Boston-Cambridge-Quincy, MA–NH (4,640,802)

• Providence-New Bedford-Fall River, RI–MA (1,601,374)

• Hartford-West Hartford-East Hartford, CT (1,214,400)

• Bridgeport-Stamford-Norwalk, CT (933,835)

• Worcester, MA (923,762)

• New Haven-Milford, CT (862,813)

• Springfield, MA (625,718)

Therefore, rather than weighting the average of the SPAs in favor of more

heavily populated CBAs, we propose that the RSPA be based on the simple average of the SPAs for the CBAs in the region, with the SPA for the much smaller Springfield, MA CBA and the SPA for the much larger Boston-Cambridge-Quincy, MA–NH Springfield, MA CBA contributing equally toward calculation of the RSPA. We believe this approach would result in adjustments that factor in the regional costs associated with furnishing items and services in the New England region of the country, while not giving undue weight to the costs of furnishing items and services in larger markets.

b. National Parameters

As explained above, the regional fee schedule amounts for P&O are limited by a national ceiling equal to 120 percent of the average of the regional fee schedule amounts for all the states and a national floor equal to 90 percent of the average of the regional fee schedule amounts for all the states. This limits the range in the regional fee schedule amounts from highest to lowest to no more than 30 percent, 20 percent above the national average and 10 percent below the national average. By contrast, the fee schedule payment methodology for DME only allows for a variation in statewide fees of 15 percent below the median of statewide fees for all the states. The national limits to the fee schedule amounts for P&O and DME have not resulted in a barrier to access to items and services in any part of the country. We believe this reflects the fact that the costs of furnishing DMEPOS items and services do not vary significantly from one part of the country to another and that national limits on regional prices is warranted. We therefore propose to limit the variation in the RSPAs using a national ceiling and floor in order to prevent unnecessarily high or low regional amounts that vary significantly from the national average prices for the items and services. The national ceiling and floor limits would be based on 110 percent and 90 percent, respectively, of the average of the RSPAs applicable to each of the 48 contiguous states and the District of Columbia (that is, the average of RSPAs is weighted by the number of contiguous states including the District of Columbia per region). We propose that any RSPA above the national ceiling would be brought down to the ceiling and any RSPA below the national floor would be brought up to the floor. We propose that the national ceiling would exceed the average of the RSPAs by the same percentage that the national floor would be under the average of the RSPAs. This allows for a maximum variation of 20 percent from the lowest RSPA to the highest RSPA. We believe that a variation in payment amounts both above and below the national average price should be allowed, and we believe that allowing for the same degree of variation (10 percent) above and below the national average price is more equitable and less arbitrary than allowing a higher degree of variation (20 percent) above the national average price than below (10 percent), as in the case of the national ceiling and floor for the P&O fee schedule, or allowing for only 15 percent variation below the national average price, as in the case of the national ceiling and floor for the DME fee schedule.

c. Rural and Frontier State Adjustments

Under the DMEPOS CBP, the statute prohibits competitions before 2015 in new CBAs that are rural areas or MSAs with a population of less than 250,000. Even if competitions were to begin in these areas in 2015, it is very unlikely that the SPAs from these areas would be computed and finalized by January 1, 2016. Therefore, we propose that the proposed RSPAs initially be based solely on information from existing programs implemented in 100 MSAs, which are generally comprised of more densely populated, urban areas than areas outside MSAs. We therefore believe that the initial RSPAs would not directly account for unique costs that may be associated with furnishing DMEPOS in states that have few MSAs and are predominantly rural or cover large geographic areas and are sparsely populated. However, in keeping with the discussion above, we do not believe that the cost of furnishing DMEPOS in these areas should deviate significantly from the national average price established based on supplier bids for furnishing items and services in different areas throughout the country.

As explained above, the DMEPOS fee schedule amounts are based primarily on supplier charges for furnishing items and services in urban areas and this has not resulted in problems associated with access to these items and services in rural areas or large, sparsely populated areas. Nonetheless, for the purpose of ensuring access to necessary items and services in states that are more rural or sparsely populated than others, we propose that the adjusted fee schedule amounts for states that are more rural than urban and defined as ''rural states'' or states where a majority of the counties are sparsely populated and defined as ''frontier states'' would be no lower than the national ceiling amount discussed in section b above.

We propose in § 414.202 that a *rural state* be defined as a state where more than 50 percent of the population lives in rural areas within the state as determined through census data, since a majority of the general population of the state lives in rural areas, it is likely that a majority of DMEPOS items and services are furnished in rural settings in the state. This is in contrast to other states where the majority of the general population of the state lives in urban areas, making it more likely that a majority of DMEPOS items and services are furnished in urban settings or in MSAs. We believe that for states where a majority of the general population lives in rural areas, adjustments to the fee schedule amounts should be based on the national ceiling amount if the RSPA is lower than the national ceiling amount. This higher level of payment would provide more assurance that access to items and services in states within a region that are more rural than urban is preserved in the event that costs of furnishing DMEPOS items and services in rural areas is higher than the costs of furnishing DMEPOS items and services in urban areas.

We propose in § 414.202 that a *frontier state,* would be defined as a state where at least 50 percent of counties in the state have a population density of 6 people or less per square mile. In such states, the majority of counties where DMEPOS items and services may be needed are very sparsely populated and suppliers may therefore have to drive considerably longer distances in furnishing these items and services as opposed to other states where the beneficiaries live closer to one another. The designation of states as frontier states or frontier areas is currently used under Medicare Part A to make adjustments to the wage index for hospitals in these remote areas in order to ensure access to services in these areas. The definition of frontier state that is proposed above for the purpose of implementing section 1834(a)(1)(F) and (G) of the Act is consistent with the current definition in section 1886(d)(3)(E)(iii)(II) and (III) of the Act and 42 CFR 412.64(m) of the regulations related to implementation of the hospital wage index adjustments and prospective payment system for hospitals under Part A. We believe that states designated as frontier states have a significant amount of area that is sparsely populated and are more likely to be geographically removed from (that is, a considerable driving distance from) areas where population is more concentrated. However, we solicit

comments on alternative definitions of frontier states.

Based on the 2010 Census data, states designated as rural would include Vermont, Maine, West Virginia, and Mississippi. Other than one CBA that is fully located in Mississippi, one CBA that is partially located in Mississippi, and two CBAs that are partially located in West Virginia, the RSPAs would not include SPAs that reflect the costs of furnishing items and services in these states based on where the CBAs are currently located. Current frontier states include North Dakota, South Dakota, Montana, and Wyoming, and the RSPAs would not include SPAs that reflect the costs of furnishing items and services in any of these states based on where the CBAs are currently located. We propose that the designation of rural and frontier states could change as the U.S. Census information changes. We propose that when a state that is not designated as a rural state or frontier becomes a rural state or frontier state based on new, updated information from the U.S. Census Bureau, that adjustments to the fee schedule amounts in accordance with the proposed provision of this section would take effect as soon as such changes can be implemented. Likewise, we propose that at any time a state that is designated as a rural state or frontier no longer meets the proposed definition in this section for rural state or frontier state based on new, updated information from the U.S. Census Bureau, that adjustments to the fee schedule amounts in accordance with the proposed provision of this section would take effect as soon as such changes can be implemented. We propose that the changes to the state designation would occur based on the decennial Census. The decennial Census uses total population of the state to determine whether the state is predominately rural or frontier. The U.S. Census Bureau also uses current population estimates every 1, 3, and 5 years through the American Community Survey but only samples a small percentage of the population every year, not the total population. Therefore, we propose that the designation of a rural or frontier state occur approximately every 10 years when the total population data is available. For the current proposed fee schedule adjustments, we propose to use the 2010 Census Data. The next update would reflect the 2020 Census Data and any changes in the designation of a rural or frontier state and corresponding fee schedule changes would be implemented after the 2020 Census Data becomes available. For this and subsequent updates, we propose to include a listing of the qualifying rural and frontier States in program guidance that is issued quarterly and to provide at least 6 months advance notice of any adjustments.

Some of the comments received on the ANPRM indicated that the costs of furnishing DMEPOS items and services in rural areas is significantly higher than the costs of furnishing DMEPOS items and services in urban areas. Other commenters suggested that the adjustments to the payment amounts based on information from CBPs be phased in to give suppliers time to adjust to the new payment levels. Although we believe that the costs of furnishing items and services in rural areas are different than the costs of furnishing items and services in urban areas, there is no evidence to support a statement that the difference in costs is significant. However, in order to proceed cautiously on this matter in the interest of ensuring access to covered DMEPOS items and services, we are proposing to phase in the price adjustments, as explained below, so that we can monitor the impact of the adjustments as they are gradually phased in.

In summary, we propose that adjustments to payment amounts for areas within different regions of the contiguous United States would be based on the un-weighted average of SPAs from CBAs that are fully or partially located within these regions. The regional amounts would be limited by a national ceiling and floor and the adjusted payment amounts for all states designated as rural or frontier states would be equal to the national ceiling. In addition, we are soliciting public comments on whether payment in rural areas of states that are not designated as rural or frontier states should be set differently.

d. Areas Outside the Contiguous United States

Given the unique costs of furnishing DMEPOS items and services in remote, isolated areas outside the contiguous United States such as Alaska, Guam, Hawaii, Puerto Rico, the United States Virgin Islands and other areas, we propose that any SPAs from programs in these areas be excluded from the calculation of the RSPAs in section a. In addition, we propose that the adjustments to the fee schedule amounts for areas outside the contiguous United States would not be based on the RSPAs. Rather, we propose that the adjustments to the fee schedule amounts for these areas be based on the higher of the average of SPAs for CBAs in areas outside the contiguous United States (for example, Honolulu) or the national ceiling limit applied to the payment adjustments for areas within the contiguous United States. We believe that, to the extent that SPAs from non-contiguous areas are available, these amounts should be used in making adjustments to the payment amounts for other areas outside the contiguous United States since the challenges and costs of furnishing DMEPOS items and services in all remote, isolated areas is similar. We also believe that the payment adjustments for these areas, like those for the proposed rural and frontier states, should not be lower than the national ceiling established for items and services furnished in the contiguous United States. Areas outside the contiguous United States generally have higher shipping fees and other costs. We believe the SPAs in Honolulu and other areas outside the contiguous United States reflect these costs and could be used to adjust the fee schedule amounts for these areas without limiting access to DMEPOS items and services. However, in the event that the national ceiling limit described in section b above is greater than the average of the SPAs for CBPs in areas outside the contiguous United States, we propose that the higher national ceiling amount be used in adjusting the fee schedule amounts for areas outside the contiguous United States in order to better ensure access to DMEPOS items and services.

We are soliciting comments on these proposals.

2. Methodology for Items and Services Included in Limited Number of Competitive Bidding Programs

In some cases, there may not be a sufficient number of CBAs and SPAs available for use in computing RSPAs, and therefore, a different methodology for implementing section 1834(a)(1)(F)(ii) of the Act would be necessary. For items and services that are subject to competitive bidding and have been included in CBP in no more than 10 CBAs, we propose that payment amounts for these items in all non-competitive bidding areas be adjusted based on 110 percent of the average of the SPAs for the areas where CBPs are implemented. Using a straight average of the SPAs rather than a weighted average of the SPAs gives SPAs for the various CBAs equal weight regardless of the size of the CBA. We believe this avoids giving undo weight to SPAs for more heavily populated areas. We are proposing the additional 10 percent adjustment to the average of the SPAs to account for unique costs such as

delivering items in remote, isolated locations, but would make this a uniform adjustment for program simplification purposes. This issue is discussed in more detail below.

Under the DMEPOS CBP, there may be items and services for which implementation of CBPs could generate significant savings for the beneficiary and/or program, but which are furnished infrequently in most MSAs. In some cases, such items and services could be combined with other items and services under larger PCs or included in mail order competitions, to the extent that these are feasible options. For example, combining infrequently used traction equipment and frequently used hospital beds in the same product for bidding purposes would ensure that any beneficiary that needs traction equipment in the CBA would have access to the item from the suppliers also contracted to furnish hospital beds in the area. This would make it feasible to include traction equipment in numerous MSAs throughout the country and would allow use of the RSPA methodology described above. However, if a PC was established just for traction equipment for bidding purposes, the volume of items furnished in certain MSAs may not be sufficient to generate viable competitions under the program because there may be a limited number of suppliers interested in competing to furnish the items in local areas. Nonetheless, if significant savings for the beneficiary and/or program are possible for the equipment, we are mandated to phase the items in under the DMEPOS CBP.

In addition, for lower volume items within large PCs, such as wheelchair accessories, we propose to include these items in a limited number of local competitions rather than in all CBAs to reduce the burden for suppliers submitting bids under the programs as a whole. In these cases, for the purposes of implementing section 1834(a)(1)(G) of the Act, we propose that payment amounts for these items in all areas where CBPs are not implemented be adjusted based on 110 percent of the average of the SPAs for the areas where CBPs are implemented. We are proposing the additional 10 percent adjustment to the national average price to account for unique costs in certain areas of the country such as delivering items in remote, isolated locations. For example, the PC for standard mobility in the 9Round 1 CBAs includes 25 HCPCS codes for low volume wheelchair accessories that are not included in the PC for standard wheelchairs, scooters, and related accessories in the 100 Round 2 CBAs. We propose that payment amounts for these items in areas where CBPs are not implemented be adjusted based on 110 percent of the average of the SPAs for the 9Round 1 areas where CBPs are implemented. Alternatively, we could include these low volume items in all PCs in all 109 CBAs and suppliers would need to develop bid amounts and enter bids for these 25 codes for low volume items such as toe loop holders, shock absorbers and IV hangers. Including these 25 Healthcare Common Procedure Coding System (HCPCS) codes for low volume wheelchair accessories in the PCs under the 9 Round 1CBAs means that suppliers submitting bids for wheelchairs have 25 bid amounts to develop and enter per CBA for these items, or a total of 225 bid amounts to develop and enter for these low volume items if bidding for wheelchairs in all 9 Round 1 CBAs. In contrast, including these codes in the PCs under all 109CBAs means that suppliers submitting bids for wheelchairs have 2,725 bid amounts to develop and enter for these low volume items, if bidding for wheelchairs in all 109 CBAs. We believe that adjusting fee schedule amounts based on SPAs from 10 or fewer CBAs achieve the savings mandated by the statute for these items while greatly reducing the burden on suppliers and the program in holding competitions for these items in all 109 CBAs across the country.

Finally, if contracts and SPAs for low volume items included in a limited number of CBAs expire and the items are not included in future CBPs, we propose to use the information from the past competitions to adjust the payment amounts for these items nationally based on 110 percent of the average of the SPAs for the areas where CBPs were implemented. Even though the SPAs may no longer be in effect, we believe it is reasonable to use the information to reduce excessive payment amounts for items and services as long as the SPAs did not result in a negative impact on access to quality items and services while they were in effect and as long as the amounts are adjusted to account for increases in costs over time. For example, 4 codes for adjustable wheelchair seat cushions were included in the Round 1 Rebid, with SPAs that were approximately 25 percent below the fee schedule amounts being in effect in 9 CBAs from January 2011 thru December 2013. These items were not bid in future rounds due to the low volume of use relative to other wheelchair seat cushions. During the course of the 3-year contract period when the SPAs were in effect in the 9 areas, there were no reports of access problems and there were no negative health outcomes as a result of including these items under CBPs. For the future, savings for these items could be achieved by including them in future competitions or by using the previous SPAs, updated by an economic update factor to account for increases in costs. If the decision is made not to include these items in future competitions, we believe savings can and should still be obtained based on information from the previous competitions.

We are soliciting comments on these proposals.

3. Adjusted Payment Amounts for Accessories Used With Different Types of Base Equipment

There may be situations where the same accessory or supply identified by a HCPCS code is used with different types of base equipment, and the item (HCPCS code) is included in one or more PCs under competitive bidding for use with some, but not all of the different types of base equipment it is used with. For these situations, we propose to use the weighted average of the SPAs from CBPs and PCs where the item is included for use in adjusting the payment amounts for the item (HCPCS code). We believe that it would be unnecessarily burdensome to have different fee schedule amounts for the same item (HCPCS code) when it is used with similar, but different types of base equipment. We believe that the costs of furnishing the accessory or supply should not vary significantly based on the type of base equipment it is used with.

Therefore, we seek public comments on addressing situations where an accessory or supply identified by a HCPCS code is included in one or more PCs under competitive bidding for use with more than one type of base equipment. In these situations, we propose to calculate the SPA for each CBA by weighting the SPAs from each PC in that CBA by national allowed services. This would result in the calculation of a single SPA for the item for each CBA. The single SPA per code per CBA would then be used in applying the payment adjustment methodologies proposed above. For example, HCPCS code Exxx1 describes a tray used on a wheelchair. Exxx1 was included in a PC for manual wheelchairs in all CBAs and in a separate, second PC for power wheelchairs in all CBAs. SPAs for Exxx1 under the manual wheelchair PC are different than the SPAs for Exxx1 under the power wheelchair PC.

Under the proposal, national allowed services would be used to compute a weighted average of the SPAs for Exxx1 in each of the CBAs. So, rather than having 2 different SPAs for the same code in the same CBA, we would have 1 SPA for the code for the CBA. If the item is included in only one PC, we propose to use the SPAs for the item from that PC in applying the payment adjustment methodologies proposed above.

We are soliciting comments on these proposals.

4. Adjustments to Single Payment Amounts That Result From Unbalanced Bidding

Within the HCPCS there are instances where there are multiple codes for an item that are distinguished by the addition of a hierarchal feature(s). For example, one code may describe an enteral nutrition infusion pump with an alarm and another code may describe a less sophisticated pump without an alarm. Under competitive bidding, the code with the higher utilization would receive a higher weight and the bid for this item would have a greater impact on the composite bid and competitiveness of the supplier's overall bid for the PC within the CBP than the bid for the less frequently used alternative. This can result in unbalanced bidding where the bids and SPAs for the item without the additional features is higher than the bids and SPAs for the item with the additional features due to the fact that the item with the features is utilized more than the item without the features and therefore receives a higher weight. We believe that it is not inherently reasonable for payment amounts for equipment with fewer features or functionality to be higher than payment amounts for equipment with additional features or functionality.

For example, HCPCS code B9000 describes an enteral nutrition infusion pump without alarm, whereas code B9002 describes an enteral nutrition infusion pump with alarm. Both codes have identical fee schedule amounts. Based on paid claims data, only 176 Medicare beneficiaries received the pump without the alarm in 2012, whereas 52,531 Medicare beneficiaries received the pump with the alarm in 2012. Both pumps are included in the PC for enteral nutrients, supplies, and equipment. As a result of the significantly higher utilization of code B9002, this code received a much higher item weight under the CBP than code B9000, and, as a result, a supplier could submit a much higher bid for B9000 than for B9002 with virtually no impact on their composite bid. Under Round 2, unbalanced bidding resulted in SPAs for code B9000 without the alarm being 6 percent higher on average than the SPAs for code B9002 with alarm. Unbalanced bidding also occurred under Round 2 in the case of standard power wheelchairs, with SPAs for infrequently used Group 1, standard weight power wheelchairs (codes K0815 and K0816) being 16 percent higher on average than the SPAs for the much more frequently used Group 2 versions (codes K0822 and K0823). Based on paid claims data, only 474 Medicare beneficiaries received Group 1 power wheelchairs described by codes K0815 and K0816 in 2012, whereas 196,968 Medicare beneficiaries received higher performing Group 2 power wheelchairs described by codes K0822 and K0823 in 2012. The long term solution for avoiding cases of unbalanced bidding is to eliminate duplicate codes in the HCPCS. For the purpose of implementing section 1834(a)(1)(G) of the Act, and in making adjustments to payment amounts under sections 1834(a)(1)(F)(ii), 1834(h)(1)(H)(ii), and 1842(s)(3)(B) of the Act, we propose that the payment amounts for infrequently used codes that describe items and services with fewer features than codes with more features be adjusted so that they are no higher than the payment amounts for the more frequently used codes with more features. For example, the adjusted fee schedule amounts for code B9000 would be set so that they are no higher than the adjusted fee schedule amounts for code B9002. We believe that without this provision, unbalanced bidding could result in fee schedule amounts for items that essentially represent lower levels of service being higher than fee schedule amounts for items representing higher levels of service, based on bids being higher for infrequently used items with lower weights and less features than bids for frequently used items with higher weights and more features. This could result in beneficiaries receiving the item with fewer features and functionality simply because the supplier has a financial incentive to furnish that item. This is especially important in light of the fact that use of the inherent reasonableness authority provided by section 1842(b)(8) and (9) of the Act cannot be used to further adjust payment amounts that are adjusted based on the mandate of section 1834(a)(1)(F)(ii) and the authority provided by sections 1834(h)(1)(H)(ii) and 1842(s)(3)(B) of the Act.

We seek public comments on this issue and our proposed provision to address this issue.

5. National Mail Order Program—Northern Mariana Islands

While Section 1847(a)(1)(A) of the Act provides that CPBs be established throughout the United States, the definition of United States at section 210(i) of the Act does not include the Northern Mariana Islands. We therefore previously determined that the Northern Mariana Islands are not considered an area eligible for inclusion under a national mail order CBP. For the purpose of implementing the requirements of section 1834(a)(1)(F)(ii) of the Act, we are proposing that the payment amounts established under a national mail order CBP would be used to adjust the fee schedule amounts for mail order items furnished to beneficiaries in the Northern Mariana Islands. We propose that the adjusted fee schedule amounts would be equal to 100 percent of the amounts established under the national mail order CBP.

We are soliciting comments on these proposals.

6. Updating Adjusted Payment Amounts

In accordance with section 1834(a)(1)(F)(iii) of the Act, the adjusted payment amounts for DME must be updated as additional items are phased in or information is updated. We propose to add regulation text indicating that we would revise the adjusted payment amounts for DME, enteral nutrients, supplies, and equipment, and OTS orthotics each time a SPA is updated following one or more new competitions, which may occur at the end of a contract period, as additional items are phased in, or as new programs in new areas are phased in. This is required by section 1834(a)(1)(F)(iii) for DME. Since we believe it is reasonable to assume that updated information from CBPs would better reflect current costs for furnishing items and services, we are proposing regulations to require similar updates for enteral nutrients, supplies, and equipment, and OTS orthotics.

As we indicated above, if the only SPAs available for an item are those that were established under CBP that are no longer in effect, we propose to use these SPAs to adjust payment amounts using the methodologies described above and we propose to do so following application of inflation adjustment factors. We propose that the inflation adjustment factor would be based on the percentage change in the Consumer Price Index for all Urban Consumers (CPI–U) from the mid-point of the last

year the SPAs were in effect to the month ending 6 months prior to the date the initial payment adjustments would go into effect. The adjusted payment amounts would continue to be updated every 12 months using the percentage change in the CPI–U for the 12-month period ending 6 months prior to the date the updated payment adjustments would go into effect. Use of the CPI–U as the update factor is consistent with how pricing amounts for DMEPOS have been updated since October 1, 1985, when the CPI–U was used in calculating the IIC for use in calculating reasonable charges. The CPI–U was used in updating reasonable charge data for use in calculating the initial fee schedule amounts and is used in determining the covered item update factors at sections 1834(a)(14), 1834(h)(4)(A), 1834(i)(1)(B), 1842(s)(1)(B) of the Act. If CBPs are subsequently established for the item, we propose that the SPAs established under these programs would be used in applying the payment adjustment methodologies described above.

If finalized, the payment amounts that would be adjusted in accordance with sections 1834(a)(1)(F)(ii) and (iii) of the Act for DME, section 1834(h)(2)(H)(ii) of the Act for orthotics, and section 1842(s)(2)(B) of the Act for enteral nutrients, supplies, and equipment shall be used to limit bids submitted under future competitions of the DMEPOS CBP in accordance with regulations at § 414.414(f). Section 1847(b)(2)(A)(iii) prohibits the awarding of contracts under a CBP unless we are sure that total payments made to contract suppliers in the CBA are less than the payment amounts that would otherwise be made. In order to assure savings under a CBP, the fee schedule amount that would otherwise be paid is used to limit the amount a supplier may submit as their bid for furnishing the item in the CBA. If finalized, the payment amounts that would be adjusted in accordance with sections 1834(a)(1)(F)(ii) and (iii) of the Act for DME, section 1834(h)(2)(H)(ii) of the Act for orthotics, and section 1842(s)(2)(B) of the Act for enteral nutrients, supplies, and equipment would be the payment amounts that would otherwise be made if payments for the items and services were not made through implementation of a CBP. Therefore, the adjusted fee schedule amounts would become the new bid limits.

We are soliciting comments on these proposals.

7. Summary of Proposed Methodologies

To summarize, under the proposed methodology in subsection 1 above which applies to items and services included in more than 10 CBAs, adjusted fee schedule amounts would be determined based on RSPAs limited by a national floor and ceiling. The RSPA would be established using the average of the SPAs for an item from all CBAs that are fully or partially located in the region. The payment amount for the item, with limited exceptions for areas outside the contiguous United States, would be equal to its RSPA but not less than 90 percent and not more than 110 percent of the national average, which is the average of the RSPAs weighted by the number of states in the region. The proposed methodology is modeled closely after the regional fee schedule payment methodology in effect today for P&O. For the purpose of establishing the regional boundaries, we propose to use 8 regions developed by the Bureau of Economic Analysis (BEA) within the Department of Commerce: New England, Mideast, Great Lakes, Plains, Southeast, Southwest, Rocky Mountain, and Far West. For rural and frontier states, we propose that the payment amount would be 110 percent of the national average. For areas outside the contiguous United States, the payment amount would be the greater of the average of the SPAs in the non-contiguous areas or 110 percent of the national average. As described in subsection 2 above, we propose a different methodology for low volume items with a limited number of SPAs. In addition, we propose to apply update factors to SPAs no longer in effect to adjust fee schedule amounts if no other data is available. Finally, we propose that adjustments would be made to account for SPAs for lower levels of service that are higher than SPAs for higher levels of service.

A summary of the proposed methodologies is provided in Table 37 below.

TABLE 37—SUMMARY OF PROPOSED METHODOLOGIES FOR ADJUSTING PAYMENT IN NON-BID AREAS

Proposed methodology	Calculations
1) Adjustments for Items Included in More than 10 CBAs*	
Regional Adjustments Limited by National Parameters for Items Furnished Within the Contiguous United States.	Adjusted payment equal to the RSPA (calculated using the un-weighted average of SPAs from CBAs that are fully or partially located with a BEA region) limited by a national floor and ceiling. The national ceiling and floor would be set at 110 percent and 90 percent, respectively, of the national weighted RSPA average (average of the RSPAs applicable to each of the 48 contiguous states and DC).
Adjustments for Rural and Frontier States ..	Adjusted payment for designated States based on 110 percent of the national weighted RSPA average.
Adjustments for Items Furnished Outside the Contiguous United States.	Adjusted payment for non-contiguous areas (e.g., Alaska, Guam, Hawaii) based on the higher of the average of SPAs for CBAs in areas outside the contiguous U.S. or 110 percent of the national weighted RSPA average applied to adjustments within the contiguous U.S.
2) Adjustments for Lower Volume or Other Items Included in 10 or Fewer CBAs*.	Adjusted payment based on 110 percent of the un-weighted average of the SPAs for the areas where CBPs are implemented for contiguous and non-contiguous areas of the United States.
3) Adjustments for Items Where the Only Available SPA is from a CBP No Longer in Effect.	Payment based on adjusted payment determined under 1) or 2) above and adjusted on an annual basis based on the CPI–U update factors from the mid-point of the last year the SPAs were in effect to the month ending 6 months prior to the date the initial payment adjustments would go into effect.
4) Adjustments for Accessories Used with Different Types of Base Equipment	
Adjustments for Accessories Included in One CBP Product Category.	SPAs for the item from that one Product Category would be used in determining the adjusted payment amounts under methodologies 1) or 2).
Adjustments for Accessories Included in One or More CBP Product Category.	A weighted average of the SPAs for the item in each CBA where the item is included in more than one Product Category would be used to determine the adjusted payment amounts under methodologies 1) or 2).

TABLE 37—SUMMARY OF PROPOSED METHODOLOGIES FOR ADJUSTING PAYMENT IN NON-BID AREAS—Continued

Proposed methodology	Calculations
5) Payment Adjustments to Northern Mariana Islands Using the National Mail Order SPAs.	Fee schedule amounts adjusted to equal the SPAs under the national mail order CBP.

* Note: We are also proposing to adjust the SPAs for a lower level of service item to not exceed the SPAs of a higher level of service item prior to applying the methodologies in 1) and 2) above in instances where the SPA for the lower level of service item exceeds the higher level of service item.

VI. Proposed Payment Methodologies and Payment Rules for Durable Medical Equipment and Enteral Nutrition Furnished Under the Competitive Bidding Program

A. Background

The payment rules for DME have changed significantly over the years since 1965, resulting in the replacement of the original monthly rental payment methodology with lump sum purchase and capped rental payment rules, as well as separate payment for repairs, maintenance and servicing, and replacement of expensive accessories for beneficiary-owned equipment. In our experience, these payment rules have been burdensome to administer and have added program costs associated with expensive wheelchair repairs and payment for loaner equipment, and have significantly increased costs associated with frequent replacement of expensive accessories at regular intervals for items such as CPAP devices. We estimate that separate payments for CPAP accessories have increased annual expenditures by approximately $200 million. In some cases, the costs associated with maintaining DME owned by beneficiaries equals or exceeds any savings that might be generated from capping rental payments. In the case of repairs, suppliers are not mandated to service the equipment they furnish once title transfers to the beneficiary—any supplier can provide these services. This could create a hardship for the beneficiary since they must find a supplier willing to repair the equipment and their separate coinsurance payments could be substantial if the repair services are extensive. According to § 414.408(h)(3) of our regulations, payment on a capped rental basis also results in the restart of periods of continuous use for capped rental items, and according to § 414.408(i)(2) of our regulations, an extension in the rental cap periods for oxygen equipment when a beneficiary transitions from a non-contract supplier to a contract supplier at the start of a new CBP. These issues were discussed in the February 26, 2014, ANPRM noted above (79 FR 10758). It is not clear, however, the extent to which the capped rental requirement, combined with separate payments for supplies, accessories, repairs, and program administration, overall results in net savings or net costs to the Medicare program, particularly if we examine the effects of the policy on specific DME items and services.

Under the Social Security Amendments of 1965 (Pub. L. 89–97) enacted on July 30, 1965, Medicare Part B covered only rental of DME items. The Social Security Amendments of 1967 (Pub. L. 90–248), approved January 2, 1968, revised the statute to provide authority for making payment for DME on a purchase basis as well as on a rental basis. On May 12, 1972, the Government Accountability Office (GAO) issued a report to the Congress entitled ''Need for Legislation to Authorize More Economical Ways of Providing Durable Medical Equipment under Medicare'' (B–164031(4), May 12, 1972) that led to Social Security Amendment (section 245) in 1972. Section 245 of the Social Security Amendments of 1972 (Pub. L. 92–603) enacted on October 30, 1972, modified the payment provisions for specific equipment items to LCL of reasonable charges to contain the costs of DME. This law allowed the Department of Health and Human Services (HHS) to experiment with reimbursement approaches and implement any purchase approach found to be feasible and economical in order to avoid prolonged rental payments for expensive DME. Furthermore, section 16 of the Medicare-Medicaid Anti-Fraud and Abuse Amendments (Pub. L. 95–142), enacted on October 25, 1977, amended section 1833(f) of the Act to read as follows:

> In the case of durable medical equipment to be furnished an individual as described in section 1861(s)(6), the Secretary shall determine, on the basis of such medical and other evidence as he finds appropriate (including certification by the attending physician with respect to expected duration of need), whether the expected duration of the medical need for the equipment warrants a presumption that purchase of the equipment would be less costly or more practical than rental. If the Secretary determines that such a presumption does exist, he shall require that the equipment be purchased, on a lease-purchase basis or otherwise, and shall make payment in accordance with the lease-purchase agreement (or in a lump sum amount if the equipment is purchased other than on a lease-purchase basis); except that the Secretary may authorize the rental of the equipment notwithstanding such determination if he determines that the purchase of the equipment would be inconsistent with the purposes of this title or would create an undue financial hardship on the individual who will use it.

This law required HHS to make lease-purchase decisions on a case-by-case basis based on whether purchase would be less costly or more practical than rental and reimburse on the basis of a lump-sum purchase or a lease/purchase arrangement. To implement the change in the law, HHS issued final regulations (45 FR 44287) on July 1, 1980. This regulation provided that the purpose of the lease purchase payment arrangement for new and used DME was to reduce program costs caused by long and costly rentals of the equipment and reduce beneficiary expenses for annual deductibles and coinsurance for unnecessarily long rentals. However, the regulations were not implemented until 1985 because of uncertainty as to whether they would result in program savings. During the same time period, amidst growing concerns by the agency about prolonged and excessive rentals, Williams College under a grant administered by HCFA (now CMS) issued a report entitled ''Determinants of Current and Future Expenditures on Durable Medical Equipment by Medicare and its Program Beneficiaries'' on April 1983. This report estimated the excess rentals at about 14 percent of rental payments. Following this report, a GAO report titled ''Procedures for avoiding excess rental payments for durable medical equipment should be modified'' issued on July 30, 1985, showed that excess rentals represented about 54 percent of the amounts allowed for lower cost items ($120 or less) and 34 percent for higher cost items. In the GAO report, excess rental payments represented the difference between total Medicare rental payments for an item of equipment and Medicare reimbursement for the item if it had been purchased. GAO data showed substantially fewer short-term rentals

than Williams' data (22 percent versus 64 percent for episodes lasting 1 or 2 months) and substantially more long-term rentals (33 percent. versus 8 percent for episodes lasting more than 12 months).

GAO concluded that savings would result for reimbursing low-cost items on a purchase basis because about two-thirds of the rented items in its study costing $100 or less would have been cheaper to buy. GAO also found that sufficient data was not available to reliably predict when purchasing a high cost item would be less costly than renting it. The report indicated that purchase price was reached by about month 7, with additional monthly rental payments beyond month 7 resulting in excess rental payments cost thereafter. Because of the uncertainty with respect to the high-cost items, GAO recommended alternative reimbursement approaches such as adjustment of the rental rate and requirements that suppliers accept whatever percentage is adopted.

The report further discussed HHS and supplier comments on the GAO report draft. HHS also commented that the cap proposal did not address the issues associated with ownership of DME after the maximum amount of the cap had been reached. The supplier comments included recommendations from National Association of Medical Equipment Suppliers (NAMES) proposal for considering alternative methods that limited rental payments after a specified number of months such as 24 months for non-oxygen-related DME items (wheelchairs and hospital beds). At the end of the 2-year period, any item still being rented would be subject to a monthly maintenance fee in lieu of rental based on 30 percent of the latest allowable rental charge. Title to the items would remain with the supplier, and the item would be returned when no longer needed.

Section 4062 of the Omnibus Budget Reconciliation (OBRA) Act of 1987 (Pub. L. 100–203), was enacted on December 22, 1987. This legislation added section 1834(a) to the Act, which mandated payment categories and rules for DME that dictated whether payment would be made on a rental and/or purchase basis for items in each category. These changes were intended to align payment rates and achieve savings in the Medicare program. The new payment categories mandated by section 1834(a) of the Act were promulgated via regulation at § 414.210. Sections 1834(a)(2) through (a)(5) and 1834(a)(7) of the Act set forth separate payment categories of DME and describe how the fee schedule for each of the following categories is established: Inexpensive or other routinely purchased items; Items requiring frequent and substantial servicing; Customized items; Oxygen and oxygen equipment; and Other items of DME or capped rental items.

Section 13543 of the Omnibus Budget Reconciliation Act (OBRA) of 1993 (Pub. L. 103–66), was enacted on August 10, 1993, and amended section 1834(a) to reclassify nebulizers, CPAP devices, aspirators or suction pumps, and intermittent assist or respiratory assist devices from the category of items requiring frequent and substantial servicing to the capped rental payment category. It also mandated separate payment for accessories used in conjunction with these items. Section 4315 of the Balanced Budget Act of 1997 (Pub. L. 105–33), enacted on August 5, 1997, added section 1842(s) to the Act, to authorize a fee schedule for PEN, which was promulgated via regulations at § 414.100 (66 FR 45173, August 28, 2001). In 42 CFR Part 414, Subpart C of the regulations, govern payment on a fee schedule basis for PEN nutrients, equipment and supplies. Payment for PEN items and services is made in a lump sum for nutrients and supplies that are purchased and on a monthly basis for equipment that is rented.

Section 1847 of the Act establishes the Medicare DMEPOS Competitive Bidding Program (CBP) (''Competitive Bidding Program''). Under the CBP, Medicare sets payment amounts for selected DMEPOS items and services furnished to beneficiaries in CBAs based on bids submitted by qualified suppliers and accepted by Medicare. For competitively bid items, these new payment amounts, referred to as ''single payment amounts,'' replace the fee schedule payment amounts. Section 1847(b)(5) of the Act provides that Medicare payment for competitively bid items and services is made on an assignment-related basis equal to 80 percent of the applicable SPA amount, less any unmet Part B deductible.

Payment errors and increased costs can occur as a result of paying separately for equipment, repairs, accessories, and routine maintenance and servicing associated with beneficiary ownership of DME after the 13-month capped rental period or initial lump sum purchase, which have increased the risk for improper payments. The findings published in the August 2010 OIG report (OEI–07–08–00550) titled ''A review of claims for capped rental durable medical equipment'' reveal that from 2006 to 2008, Medicare erroneously paid separately for these services. Medicare paid $2.2 million for routine maintenance and servicing of capped rental DME; from 2006 to 2008, Medicare erroneously allowed nearly $4.4 million for repairs for beneficiary-owned capped rental DME that failed to meet payment requirements; and in 2007, Medicare allowed nearly $27 million for repair claims of beneficiary-owned capped rental DME that failed to meet payment requirements.

Based upon our experience, the ownership of equipment by beneficiary after lump sum purchase or after the end of 13 months capped rental period leads to complicated administrative procedures. The program must keep track of separate payment, coverage, medical necessity, and other rules for a number of related codes for replacement supplies and accessories used with the base equipment as well as labor and parts associated with repairing patient-owned equipment. In addition, claims processing systems must count rental months and contractors must identify when legitimate breaks in continuous use occur and can result in the start of new capped rental periods. This leads to costly and complicated claims processing systems edits for processing millions of claims for these items and services. Payment on a purchase or capped rental basis results in the need to process and pay separately for numerous items that are not DME but are related to furnishing DME such as repair of equipment or replacement of supplies and accessories used with patient-owned equipment necessary for the effective use of DME.

B. Proposed Provisions

We believe that we have general authority under section 1847(a) and (b) of the Act to establish payment rules for DME and enteral nutrition equipment that are different than the rules established under section 1834(a) of the Act for DME, section 1842(s) for enteral nutrients, supplies, and equipment, and, section 6112(b) of Omnibus Budget Reconciliation (OBRA) Act of 1989 (Pub. L. 101–239) for enteral pumps. We believe that lump sum purchase and capping rentals for certain DME and enteral nutrition may no longer be necessary to achieve savings under the program when competitive bidding can be used to establish a reasonable monthly payment. We also believe that payment on a continuous rental basis—that is, ongoing monthly payments not subject to a cap—could help to ensure that medically necessary DME and enteral nutrition equipment is kept in good working order for the entire duration of medial need and would make it easier for beneficiaries to change

from one supplier to another since the new supplier would not be faced with a finite number of rental payments. Currently, there is no requirement that a supplier take responsibility for repairing equipment once it is owned by a beneficiary, which may cause difficulties for the beneficiary to find a supplier to undertake such services. We believe that continuous rental payment would eliminate such issues because the supplier of the rented equipment would always be responsible for keeping the equipment in good working order. We do not believe that continuous monthly rental payments for DME and enteral nutrition would negatively impact access to items and services and could potentially be implemented in a manner that does not increase program expenditures since suppliers would be paid based on bids for furnishing the same general items and services they would otherwise provide. In addition, since Medicare payment for rental of DME and enteral nutrition equipment include payment for maintenance and servicing of the rented equipment, the suppliers would be directly responsible for meeting the monthly needs of the beneficiary in terms of keeping the rented equipment in good working order.

As indicated in section IV above, CMS issued an ANPRM: Medicare Program; Methodology for Adjusting Payment Amounts for Certain Durable Medical Equipment, Prosthetics, Orthotics, and Supplies (DMEPOS) using Information From Competitive Bidding Programs on February 26, 2014 (79 FR 10754). As part of this ANPRM, comments were solicited on whether payment on a bundled, continuous rental basis for DME and enteral nutrition should be adopted under the DMEPOS CBP. Some commenters were concerned that services such as replacement of CPAP masks and equipment repairs would not be provided if they were not paid for separately. Some commenters supported bundling payments for oxygen and enteral nutrition. Some commenters suggested that the bundling methodology be tested first before it is utilized on a wide scale basis. Thirteen commenters that included beneficiaries, beneficiary advocacy organizations, occupational therapists, and physical therapists raised concerns that access to items such as highly configured wheelchairs and speech generated devices might be disrupted under a continuous monthly bundled rental payment that includes equipment rental, replacement accessories and repairs. They felt that payment on a rental basis would result in patients losing access to these devices when they entered institutions such as hospitals and skilled nursing facilities where separate payment for DME is prohibited by section 1861(n) of the Act.

For items that continue to be paid for on a lump sum purchase basis or a capped rental basis where ownership of equipment transfers to the beneficiary following the capped rental period, we solicited comments on whether the supplier of the equipment should be responsible for repairing the equipment following transfer of title. Some commenters were opposed to the idea of making contract suppliers of purchased equipment responsible for ongoing repairs of equipment following transfer of title to the beneficiary. They stated that it would be a significant burden on suppliers to provide ongoing maintenance of equipment they furnished on a purchase basis, especially if the beneficiary moved out of the area.

After carefully considering comments received in response to the ANPRM, we are proposing to update the regulations to include proposed special payment rules described below that would be utilized in paying claims for certain DME or enteral nutrition under a limited number of CBPs. As explained in more detail in the sections that follow below, we propose to revise the regulation by adding a new section at 42 CFR 414.409 with special payment rules to replace specific payment rules at § 414.408 for these items and services in these CBPs. We also propose to revise § 414.412 regarding submission of bids for furnishing items and services paid in accordance with these special payment rules. We seek comments on these proposals.

We propose to phase-in the special payment rules described in sections 1 and 2 below in a limited number of areas for a limited number of items initially to determine whether it is in the best interest of the Medicare program and its beneficiaries to phase these rules in on a larger scale based on evaluation of the rules' effects on Medicare program costs, and quality of/access to care. In order to monitor the impact of phasing in the special payment rules in no more than 12 CBAs, we propose that, at a minimum, we would utilize evaluation criteria that are consistent with the current evaluation criteria for monitoring the impact of the CBP on utilizers of items and services in CBAs. To evaluate the quality of care for beneficiaries affected by the special payment rules, we propose that, at a minimum, we would utilize health status outcomes based criteria that would measure specific indicators such as mortality, morbidity, hospitalizations, emergency room and other applicable indicators unique to each product category. To evaluate beneficiary access to necessary items and services we propose that, at a minimum, we would monitor utilization trends for each product category and track beneficiary complaints related to access issues. To evaluate the cost of the program, we propose that, at a minimum, we would analyze the claims data for allowed services and allowed cost for each product category and the associated accessories, supplies and repair cost in the 12 CBAs and the comparator CBAs. We propose to analyze the effect of the proposed payment rules on beneficiary cost sharing.

We propose that in any competition where these rules are applied, suppliers and beneficiaries would receive advance notice about the rules at the time the competitions that utilize the rules are announced. The combined, total number of CBAs where the proposed rules in either section 1 or 2 would apply would be limited to twelve. In other words, it would not be twelve CBAs for the rules in section 1 and an additional twelve CBAs for the rules in section 2, but 12 CBAs total. In addition, we propose that the PCs listed below would be phased in to include one or more of the CBAs that would number no more than twelve total. In addition, if a determination is made to phase-in these rules on a larger scale in additional areas and for additional items based on program evaluation results regarding cost, quality, and access, the process for phasing in the rules and the criteria for determining when the rules would be applied would be addressed in future notice and comment rulemaking. This rulemaking would also address how the methodology for using these SPAs to adjust fee schedule amounts would need to be revised.

The Affordable Care Act (Patient Protection and Affordable Care Act of 2010, Pub. L. 111–148 (March 23, 2010), Sec. 3021) establishes the Center for Medicare and Medicaid Innovations (CMMI) which is authorized to test models to reduce Medicare and Medicaid expenditures while preserving or improving quality for beneficiaries of those two programs. The provision includes appropriations of $10 billion for fiscal years 2011 through 2019. We solicit comments on the option for testing the above special payment rules for DME and enteral nutrition using the CMMI demonstration authority in no more than 12 CBAs that would allow us to test and evaluate the special payment rules on a wider scale and determine

whether the special payment rules reduce Medicare expenditure while preserving or improving the quality for Medicare beneficiaries. Regardless of the authority used to phase in or test these special payment rules, we would undertake rigorous evaluation to determine the rules' effects on program costs, quality, and access.

We seek comments on the specific proposals below.

1. Payment on a Continuous Rental Basis for Select Items

We propose to revise the regulation at 42 CFR 414.409 to allow for payment on a continuous monthly rental basis under future competitions in no more than 12 CBAs for one or more of the following categories of items and services: enteral nutrition, oxygen and oxygen equipment, standard manual wheelchairs, standard power wheelchairs, CPAP and respiratory assist devices, and hospital beds. We believe that 12 CBAs represents a limited number of CBAs yet would allow testing in different regions of the country. We propose that the SPAs established under the special payment rules would be based on bids submitted and accepted for furnishing rented DME and enteral nutrition on a monthly basis. We propose that the SPAs would represent a monthly payment for each month that rented DME or enteral nutrition is medically necessary. The SPA for the monthly rental of DME would include payment for each item and service associated with the rental equipment including the ongoing maintenance and servicing of the rental equipment, and replacement of supplies and accessories that are necessary for the effective use of the equipment. In the case of enteral nutrition, we propose that the monthly SPA would include payment for all nutrients, supplies and equipment. Suppliers would be responsible for furnishing all items and services in the applicable CBA needed each month based on the physician's order. For example, in addition to furnishing the CPAP device, the supplier would be responsible for furnishing the accessories used with the device such as masks, tubing, headgear, humidifiers, etc., as well as all maintenance and servicing of the equipment. For wheelchairs, the supplier would be responsible for furnishing the type of wheelchair and all options and accessories used with the wheelchair that are needed by the patient, as well as well as all maintenance and servicing of the equipment. For hospital beds, the supplier would be responsible for furnishing the type of hospital bed and all accessories used with the hospital bed (for example, mattresses, side rails, trapeze bars, etc.) needed by the patient, as well as all maintenance and servicing of the equipment. As discussed in more detail below, phasing in these rules would help us determine the impact on Medicare expenditures as well as beneficiary access to items and services and other possible costs and benefits.

We seek comments on this proposal.

a. Enteral Nutrition

We propose to implement future competitions for enteral nutrition in no more than 12 CBAs, where payment would be based on bids submitted for furnishing all enteral nutrients, supplies, and equipment needed on a monthly basis. We propose that the suppliers would submit a single bid for each CBA for furnishing all items and services related to furnishing such enteral nutrients, supplies, and equipment in the applicable CBA needed by a beneficiary on a monthly basis. We are soliciting comments on whether alternatives to submitting a single bid for enteral nutrition should be considered, such as having separate categories based on mode of delivery (syringe fed, pump fed, or gravity fed) or separate categories based on the type of nutrients delivered. We selected the category of enteral nutrition because we believe that payment on a separate, piecemeal basis for daily supplies, calories of nutrients furnished, and monthly rental of equipment the pumps is unnecessary and overly complex. For example, for a pump-fed patient, the beneficiary must choose whether they wish to rent the pump or purchase the pump. If the beneficiary chooses to rent the pump, the supplier is required to continue furnishing the pump until the capped rental period is over, but then is allowed to bill for maintenance and servicing of the pump once every 6 month, but only if maintenance and servicing is needed and furnished. The supplier must also submit claims for daily supply kits as well as feeding tubes furnished in addition to billing for every 100 calories of enteral nutrient furnished. Finally, the supplier must bill for the pole used to hold the pump; however, the monthly rental payments for the pole are not subject to the cap on rentals that the statute specifically requires for the pump and this is confusing. In addition, issues have been raised regarding replacement parts and supplies for beneficiary-owned enteral nutrition infusion pumps when the manufacturer elects to discontinue the brand and model of pump owned by the beneficiary. Neither the beneficiary nor the supplier is able to obtain supplies that the manufacturer no longer sells and the Medicare rules would generally not allow for the purchase of a new pump since this would be duplicate equipment. We seek comments on this proposal.

b. Oxygen and Oxygen Equipment

We propose to implement future competitions for oxygen and oxygen equipment in no more than 12 CBAs, where payment would be based on bids submitted for furnishing all oxygen and oxygen equipment needed on a monthly basis. We propose that the suppliers would submit a single bid for each CBA for furnishing all items and services needed on a monthly basis, including all rented equipment and related accessories such as regulators, flowmeters, nasal cannulas, masks, tubing, humidifier bottles, tank stands and carts, and transtracheal catheters, as well as all maintenance and servicing of the equipment and delivery of oxygen contents. We selected the category of oxygen and oxygen equipment because we believe the rental cap for oxygen equipment generates very little savings under CBPs. A small percentage of beneficiaries, approximately 25 percent based on our review of Medicare claims, reach the 36-month cap, which is extended by as much as 9 months at the start of a CBP, and the SPAs for oxygen contents furnished after the cap are roughly the same as the SPAs for furnishing oxygen and oxygen equipment during the 36-month rental cap period. In addition, recent issues related to suppliers abandoning beneficiaries after the rental cap has resulted in the need to pay for lost oxygen and oxygen equipment, eliminating any savings the rental cap might have achieved. Although section 1834(a)(5)(F)(ii)(I) of the Act mandates that the supplier receiving payment for the 36th month of continuous use must continue to furnish the oxygen and oxygen equipment for any period of medical need for the duration of the reasonable useful lifetime of the equipment, certain suppliers have failed to continue providing oxygen and oxygen equipment despite this requirement.

Section 414.226 provides that for oxygen and oxygen equipment, Medicare payments are modality neutral, with the exception that the portable oxygen equipment add-on payment for oxygen generating portable equipment (OGPE) is higher than the add-on payment for liquid and gaseous portable oxygen equipment. The Medicare monthly payment for oxygen and oxygen equipment includes payment for stationary equipment

(concentrators, liquid, or gaseous stationary equipment) as well as payment for oxygen contents (stationary and portable). The add-on payment is only for the portable oxygen equipment and does not include payment for the portable oxygen contents. This fact is often confused and the portable oxygen add-on payment is erroneously viewed as a payment for portable oxygen contents as well as portable oxygen equipment. In a majority of cases, beneficiaries receive both stationary oxygen and oxygen equipment and portable oxygen and oxygen equipment, so having a separate add-on payment for portable oxygen equipment only seems unnecessary. Under our proposal, for oxygen and oxygen equipment payment under the select CBPs, we propose to eliminate the 36-month cap on equipment payments and eliminate separate add-on payments for portable equipment and separate payment for oxygen contents. Under our proposal, the contract suppliers would continue to be responsible for furnishing equipment consistent with the requirements in § 414.420.

We seek comments on this proposal.

c. Standard Manual Wheelchairs

We propose to implement future competitions for standard manual wheelchairs in no more than 12 CBAs, where payment would be based on bids submitted for furnishing standard manual wheelchairs and all accessories used in conjunction with the wheelchairs on a monthly basis. We propose that the suppliers would submit a single bid for each HCPCS code describing the wheelchair for each CBA for furnishing the wheelchair and all accessories and services needed on a monthly basis. We are soliciting on this proposal as well as comments on whether all standard manual wheelchairs should be described under one HCPCS code in order to simplify bidding and claims processing procedures. The current HCPCS codes for standard manual wheelchairs include standard, hemi (low seat), lightweight, high strength lightweight, heavy duty, and extra heavy duty wheelchairs described by codes K0001 thru K0004, K0006, and K0007 in the HCPCS. In view of comments to the ANPRM expressing concern regarding beneficiary impact of bundled arrangements for users of highly configured manual wheelchairs, we are requesting comment on what safeguards and monitoring approaches we should use to ensure that access to these items is not disrupted for individuals transitioning between settings and/or residing in remote areas. We seek comments on this proposal.

d. Standard Power Wheelchairs

We propose to implement future competitions for standard power wheelchairs in no more than 12 CBAs, where payment would be based on bids submitted for furnishing standard power wheelchairs and all accessories used in conjunction with the wheelchairs on a monthly basis. We propose that the suppliers would submit a single bid for each HCPCS code describing the wheelchair for each CBA for furnishing the wheelchair and all accessories (including batteries) and services needed on a monthly basis. We are soliciting comments on whether all standard power wheelchairs should be described under one HCPCS code in order to simplify bidding and claims processing procedures. The current HCPCS codes for standard power wheelchairs include all group 1 and group 2 power wheelchairs that cannot accommodate rehabilitative accessories and features described by codes K0813 thru K0829 in the HCPCS. In view of comments to the ANPRM expressing concern regarding beneficiary impact of bundled arrangements for users of highly configured manual wheelchairs, we are requesting comment on what safeguards and monitoring approaches we should use to ensure that access to these items is not disrupted for individuals transitioning between settings and/or residing in remote areas.

We selected the categories of standard manual and power wheelchairs because we believe that payment on a separate, piecemeal basis for hundreds of various wheelchair options and accessories is unnecessary and overly complex. In addition, issues have been raised regarding access to repair of beneficiary-owned wheelchairs following the 13-month capped rental period. For example, there are hundreds of codes for various wheelchair accessories and separate payment for each of these items in addition to the payment for the wheelchair. The separate billing, processing and payment of these claims would not be necessary given that the supplier can factor the costs of accessories into their bid for furnishing the rented equipment. In addition, the beneficiary's needs may change such that the beneficiary needs a different type of accessory from the one that was initially furnished by the supplier. Under the current rules, the accessory may not be covered if it is similar to the one that was already paid for by Medicare. If payments for all types of accessories are included in an ongoing, monthly rental amount for the wheelchair, the beneficiary can receive other accessories included in the program, provided such accessories are medically necessary.

We seek comments on this proposal.

e. CPAP and Respiratory Assist Devices

We propose to implement future competitions for CPAP and respiratory assist devices in no more than 12 CBAs, where payment would be based on bids submitted for furnishing the CPAP or respiratory assist device and supplies, accessories, and services needed on a monthly basis. We propose that the suppliers would submit a single bid for each device for each CBA for furnishing all items and services needed on a monthly basis. We are soliciting comments on our proposal as well as whether all CPAP and respiratory assist devices should be described under one HCPCS code in order to simplify bidding and claims processing procedures. We selected the category of CPAP and respiratory assist devices because we believe the cost of paying separately for the expensive accessories used with these devices may exceed the amount of savings achieved from capping the rental payments for the equipment. We seek comments on this proposal.

f. Hospital Beds

We propose to implement future competitions for hospital beds in no more than 12 CBAs, where payment would be based on bids submitted for furnishing hospital beds and all accessories used in conjunction with the hospital beds on a monthly basis. We propose that the suppliers would submit a single bid for each HCPCS code describing the hospital bed for each CBA for furnishing the hospital bed and all accessories and services needed on a monthly basis. We are soliciting comments on whether all hospital beds should be described under one HCPCS code in order to simplify bidding and claims processing procedures. We selected the category of hospital beds to allow us to determine the impact of the continuous monthly rental payment rule under CBP on beneficiary access, utilization rate and cost for an item that currently does not have beneficiary access issues or issues related to excessive cost for repair and accessories. We seek comments on this proposal.

g. Transition Rules

We propose to revise the regulation at 42 CFR 414.409 to include supplier transition rules for enteral nutrition, oxygen and oxygen equipment, standard manual wheelchairs, standard power wheelchairs, CPAP and respiratory

assist devices, and hospital beds that would be paid in accordance with the rules proposed in this section. We also propose to revise the regulation at 42 CFR 414.408 to provide a cross reference to proposed § 414.409. We propose that changes in suppliers from a non-contract supplier to a contract supplier at the beginning of the CBP where the proposed payment rules would apply would simply result in the contract supplier taking on responsibility for meeting all of the beneficiary's monthly needs while receiving payment for each month of service. We developed these proposed rules based on that fact that for capped rented DME and oxygen and oxygen equipment, since rental caps would not apply under the proposed rules, there would be no need to restart or extend capped rental periods when a beneficiary transitions from a non-contract supplier to a contract supplier. We propose that supply arrangements for oxygen and oxygen equipment, and rental agreements for standard manual wheelchairs, standard power wheelchairs, CPAP devices, respiratory assist devices, and hospital beds entered into before the start of a CBP and application of the payment rules proposed in this section would be allowed to continue so long as the supplier agrees to furnish all necessary supplies and accessories used in conjunction with the rented equipment and needed on a monthly basis. We propose that non-contract suppliers in these cases would have the option to continue rental agreements; however, we propose that as part of the process of allowing the rental agreements to continue, the grandfathered supplier would be paid based on the payment rules proposed in this section and based on the SPAs established under the CBPs incorporating the proposed rules.

We solicit comments on this proposed process.

We propose that in the event that a beneficiary relocates from a CBA where the rules proposed in this section apply to an area where rental cap rules apply, that a new period of continuous use would begin for the capped rental item, enteral nutrition equipment, or oxygen equipment as long as the item is determined to be medically necessary. We believe these rules that would result in a new period of continuous use are necessary to safeguard beneficiary access to covered items and services and plan to closely monitor the impact these rules have on beneficiary cost sharing before phasing in these rules in more than a limited number of CBAs.

We seek comments on these proposals.

h. Beneficiary-Owned Equipment

We propose that separate payment for all repairs, maintenance and servicing, and replacement of supplies and accessories for beneficiary-owned DME or enteral nutrition equipment would cease in the CBAs where the payment rules proposed under this section are in effect. We propose that if the beneficiary has a medical need for the equipment, the contract supplier would be responsible for furnishing new equipment and servicing that equipment. This option would ensure that beneficiaries continue to receive medically necessary equipment, including the supplies, accessories, maintenance and servicing that may be needed for such equipment. Please note that this would not apply to items which are not paid on a bundled, continuous rental basis. We propose to revise the regulations at § 414.409 to specify that any beneficiary who owns DME or enteral nutrition equipment and continues to have a medical need for the items should these rules take effect in a CBA where they reside, would have the option to obtain new equipment, if medically necessary, and related servicing from a contract supplier. We are requesting comment as to whether a transitional process should be considered when claims are selected for review to determine whether they are reasonable and necessary and other safeguards are required to ensure timely delivery of the replacement DME so that individuals' mobility and ability to live independently is not adversely impacted by delays. While this could potentially increase beneficiary cost sharing, it would eliminate issues associated with repair of beneficiary-owned equipment. We plan to closely monitor the impact of this proposed provision, should it be finalized.

We seek comments on this proposal, including issues related to the ability of low income beneficiaries to afford additional cost sharing, and how best to monitor beneficiary impact within the 12 CBAs in which these new rules would be phased in.

2. Responsibility for Repair of Beneficiary-Owned Power Wheelchairs Furnished Under CBPs

We propose to revise the regulation at 42 CFR 414.409 to add a new payment rule that would apply to future competitions for standard power wheelchairs in no more than 12 CBAs where payment is made on a capped rental basis and not on the basis of the rules proposed under § 1 above. In these CBPs, we propose that contract suppliers for power wheelchairs would be responsible for all necessary repairs and maintenance and servicing of any power wheelchairs they furnish during the contract period under the CBP, including repairs and maintenance and servicing of power wheelchairs after they have transferred title to the equipment to the beneficiary. We propose that this responsibility would end when the reasonable useful lifetime established for the power wheelchair expires, medical necessity for the power wheelchair ends, the contract period ends, or the beneficiary relocates outside the CBA. We propose that the contract supplier would not receive separate payment for these services and would factor the costs of these services into their bids. We believe that based on existing maintenance and servicing requirements, suppliers could project the cost of continuing to repair and service equipment of various ages once title to the equipment has transferred to the beneficiary. As indicated above, under existing rules, the supplier that transfers title to the equipment to the beneficiary after the 13 month period of continuous use is not held responsible for repairing the equipment they furnish after the beneficiary takes over ownership of the equipment. Therefore, we believe the propose rule would safeguard the beneficiary and better ensure that the beneficiary continues to have equipment in good working order to meet their needs. We propose that the contract supplier would not be responsible for repairing power wheelchairs they did not furnish. We propose that services to repair beneficiary-owned equipment furnished prior to the start of the contract period would be paid in accordance with the standard payment rules at § 414.210(e).

We seek comments on this proposal.

3. Phasing in the Proposed Payment Rules in CBAs

We propose that the CBAs where the proposed rules in §§ 1 or 2 above would be applied would be for MSAs with a general population of at least 250,000 and a Medicare Part B enrollment population of at least 20,000 that are not already included in Round 1 or 2. Based on 2012 population estimates from the Census Bureau and 2011 Medicare enrollment data, there are approximately 80 MSAs that would satisfy this criteria. Selecting MSAs not already included in Round 1 or 2 would allow competitions and rules associated with these competitions to begin after the final rule would take effect in areas that are comparable to existing CBAs. We propose that the boundaries of the CBAs would be established in accordance with the rules set forth at

§§ 414.406 and 414.410. We propose that additional CBPs for the items identified in §§ 1 and 2 above be established in ''comparator'' CBAs concurrent with CBPs where the proposed rules would be applied. Payment for items and services in the comparator CBAs would be made in accordance with the existing payment rules in § 414.408. We propose that these additional comparator CBAs and CBPs be established to facilitate our analysis of the effect of the payment rules proposed in sections 1 and 2 above compared to the effect of the existing payment rules in § 414.408. We propose that for each CBP where either the rules in section 1 or 2 above are implemented, a comparator CBA and CBP would be established. We propose that the comparator CBAs be selected so that they are located in the same state as the CBA where the special payment rules would apply and are similar to the CBAs in which the proposed payment rules would be implemented based on a combination of factors that could include geographic location (region of the country), general population, beneficiary population, patient mix, and utilization of items. We are proposing to establish the comparator CBAs and CBPs to enable us to review the impact of the proposed payment rules on expenditures, quality, and access to items and services in order to determine whether to pursue future rulemaking to expand the proposed payment rules to additional areas and or items.

We seek comments on this proposal.

4. Submitting Bids for Items Paid on a Continuous Rental Basis

In accordance with section 1847(b)(2)(A)(iii) of the Act, before contracts can be awarded, a determination must be made that the total amounts to be paid to contract suppliers under a CBP are expected to be less than the total amounts that would otherwise be paid. In accordance with § 414.414(f) of the regulations, under the DMEPOS CBP, bids amounts for an item or service are limited to the fee schedule amount that would otherwise be paid for the item or service. We propose that in order to apply the proposed rental payment rules, we would establish the bid limits for enteral nutrition, oxygen and oxygen equipment, standard manual wheelchairs, standard power wheelchairs, and hospital beds that would be paid in accordance with the proposed payment rules in sections 1 and 2 above based on average monthly expenditures per beneficiary in an area for the items and services related to furnishing the DME. For example, the bid limit for the continuous monthly rental of a standard manual wheelchair in a CBA would be based on the total payment amounts per month in the area for the wheelchair, repair, maintenance and servicing of the wheelchair, and accessories used with the wheelchair, divided by the unduplicated number of beneficiaries receiving these items and services. We propose to revise § 414.412 to specify that the supplier's bid for furnishing enteral nutrition, oxygen and oxygen equipment, standard manual wheelchairs, standard power wheelchairs, and hospital beds on a continuous monthly rental basis could not be higher than the average monthly payment made in the area for the items and services prior to the start of the competition. In the case of CPAP devices and respiratory assist devices, these items were paid on a bundled, continuous rental fee schedule basis from 1989 thru 1993, based on the rules mandated by section 4062(b) of OBRA 87, prior to the change by section 13543 of OBRA 93 that moved them from the payment class for items requiring frequent and substantial servicing to the payment class for capped rental items. Payment on a bundled, continuous rental fee schedule basis was mandated by OBRA 87 from 1989 thru 1993. The fee schedule for 1993 is the most current fee schedule where payment was based on a bundled, continuous rental basis. We propose to revise § 414.412 to specify that the supplier's bid for furnishing CPAP devices and respiratory assist devices on a continuous monthly rental basis could not be higher than the 1993 fee schedule amounts for these items, increased by the covered item update factors provided for these items in section 1834(a)(14) of the Act. We seek comments on this proposal.

We seek public comments on phasing in the proposed rules described in section 1 through 4 above.

VII. Scope of Hearing Aid Coverage Exclusion

A. Background

Section 1862(a)(7) of the Act states notwithstanding any other provision of title XVIII, no payment may be made under part A or part B for any expenses incurred for items or services ''where such expenses are for . . . hearing aids or examinations therefor. . . .'' This policy is codified in the regulation at 42 CFR 411.15(d), which specifically states that hearing aids or examination for the purpose of prescribing, fitting, or changing hearing aids are excluded from Medicare coverage. At the time of passage of the Social Security Amendments of 1965 (Pub. L. 97, 89th Congress), which added the Medicare coverage exclusion for hearing aids at section 1862(a)(7) of the Act, all hearing aids utilized functional air and/or bone conduction pathways to facilitate hearing.

In general, to be covered by Medicare, an item or service must fall within one or more benefit categories contained within Part A or Part B, and must not be otherwise excluded from coverage. With regard to section 1862(a)(7) of the Act, we consider that a hearing aid provides assistance or ''aid'' to hearing that already exists via a functioning ear. Cochlear implants were the first hearing device that was not considered a hearing aid and met the benefit category of a prosthetic device. Prosthetic devices are a Medicare benefit category defined at section 1861(s)(8) of the Act which, in part, states a ''prosthetic devices (other than dental) which replace all or part of an internal body organ.'' A cochlear implant is considered a prosthetic device primarily because it replaces the function of the cochlea. A cochlear implant device differs from a hearing aid in that it is an electronic instrument, part of which is implanted surgically to directly stimulate auditory nerve fibers, and part of which is worn or carried by the individual to capture, analyze and code sound. Both cochlear devices and brain stem implants, which function in a similar manner, create the perception of sound rather than aid hearing that already exists. We interpret the statute as excluding devices that provide aid to extant hearing (or hearing aids) rather than devices that create the perception of sound and hearing, given that devices with technology that utilize either air or bone conduction via mechanical stimulation to aid extant hearing were primarily utilized when the statute was written. Moreover, we believe that prosthetic hearing devices are not ''hearing aids'' given that such devices do more than ''aid'' in hearing and instead replace the function of an internal body organ (i.e., a part of the ear).

Historically, CMS has periodically addressed the scope of the Medicare hearing aid coverage exclusion through program instructions and national coverage policies or determinations. We briefly discuss the relevant changes that have occurred over time with regard to Medicare coverage and payment of hearing devices.

Cochlear implants were the first device covered for Medicare payment for adult beneficiaries in October 1986, when no other hearing device was being covered under Medicare, and such

coverage was supported by the Office of Health Technology Assessment's ''Public Health Service Assessment of Cochlear Implant Devices for the Profoundly Hearing Impaired'', dated June 30, 1986 found at *https://archive.org/stream/cochlearimplantd00feig/cochlearimplantd00feig_djvu.txt.* Medicare coverage was restricted to cochlear implants that treated patients with post lingual, profound, bilateral, sensorineural deafness who are stimulable and who lack the unaided residual auditory ability to detect sound.

Effective January 1, 2003, we clarified that the hearing aid exclusion broadly applied to all hearing aids that utilized functional air and/or bone conduction pathways to facilitate hearing (see section 15903, Hearing Aid Exclusion, Medicare Carriers Manual, Part 3—Claims Process (HCFA-Pub. 14–3), which was later moved to section 100, Hearing Aids and Cochlear Implants, of Chapter 16, of the Medicare Benefit Policy Manual, CMS-Pub. 100–02). Any device that does not produce at its output an electrical signal that directly stimulates the auditory nerve is a hearing aid for purposes of coverage under Medicare. Devices that produce air conduction sound into the external auditory canal, devices that produce sound by mechanically vibrating bone, or devices that produce sound by vibrating the cochlear fluid through stimulation of the round window are considered hearing aids and excluded from Medicare coverage.

Effective April 4, 2005, Medicare's national coverage policy for cochlear implants was modified through the NCD process (see section 65–14 of the Medicare Coverage Issues Manual (HCFA-Pub. 6), which was later moved to section 50.3, Cochlear Implantation, of Chapter 1, Part 1 of the Medicare National Coverage Determinations Manual (CMS-Pub. 100–03)). Our findings under the NCD, in part, state that ''CMS has determined that cochlear implants fall within the benefit category of prosthetic devices under section 1861(s)(8) of the Social Security Act.'' Medicare is a defined benefit program. An item or device must not be statutorily excluded and fall within a benefit category as a prerequisite to Medicare coverage. We believe that prosthetic hearing devices are not ''hearing aids'' given that such devices do more than ''aid'' in hearing and instead replace the function of an internal body organ (i.e., a part of the ear). Additional changes, regarding coverage criteria, have been made to NCD 50.3 over time, however, the NCD decision regarding benefit category and Medicare coverage for cochlear implantation has remained consistent. The NCD states that a cochlear implant device is an electronic instrument, part of which is implanted surgically to stimulate auditory nerve fibers, and part of which is worn or carried by the individual to capture, analyze, and code sound. Cochlear implant devices are available in single-channel and multi-channel models. The purpose of implanting the device is to provide awareness and identification of sounds and to facilitate communication for persons who are moderately to profoundly hearing impaired.

The regulations at 42 CFR 419.66 were revised to add new requirements, effective January 1, 2006, for transitional pass-through payments for medical devices. The auditory osseointegrated device, referred to as a bone anchored hearing aid (BAHA), was determined to be a new device category according to the new requirements for transitional pass-through payment. Medicare coverage was also expanded to cover auditory osseointegrated and auditory brainstem devices as prosthetic devices. Currently, section 100 of Chapter 16 of the Medicare Benefit Policy Manual (CMS Pub. 100–02) reads as follows:

> Hearing aids are amplifying devices that compensate for impaired hearing. Hearing aids include air conduction devices that provide acoustic energy to the cochlea via stimulation of the tympanic membrane with amplified sound. They also include bone conduction devices that provide mechanical energy to the cochlea via stimulation of the scalp with amplified mechanical vibration or by direct contact with the tympanic membrane or middle ear ossicles.
>
> Certain devices that produce perception of sound by replacing the function of the middle ear, cochlea, or auditory nerve are payable by Medicare as prosthetic devices. These devices are indicated only when hearing aids are medically inappropriate or cannot be utilized due to congenital malformations, chronic disease, severe sensorineural hearing loss or surgery.
>
> The following are considered prosthetic devices:
>
> • Cochlear implants and auditory brainstem implants, that is, devices that replace the function of cochlear structures or auditory nerve and provide electrical energy to auditory nerve fibers and other neural tissue via implanted electrode arrays.
>
> • Osseointegrated implants, that is, devices implanted in the skull that replace the function of the middle ear and provide mechanical energy to the cochlea via a mechanical transducer.

B. Current Issues

We have received several benefit category determination requests in recent years for the consideration of non-implanted, bone conduction hearing aid devices for single-sided deafness, as prosthetic devices under the Medicare benefit. We have received similar requests for several other types of implanted and non-implanted devices as well. In response to these requests, we have re-examined the scope of the statutory hearing aid exclusion. Currently, we consider all air or bone conduction hearing devices, whether external, internal, or implanted, including, but not limited to, middle ear implants, osseointegrated devices, dental anchored bone conduction devices, and other types of external or non-invasive devices that mechanically stimulate the cochlea, as hearing aids. All of these devices provide traditional ''aid'' to hearing and are excluded in accordance with section 1862(a)(7) of the Act. In order for an item to be covered by Medicare, it must fall into a Medicare benefit category and not be statutorily excluded. Not only are these devices statutorily excluded they do not fall in a benefit category. Specifically, they do not meet the statutory definition of a prosthetic device found at section 1861(s)(8) of the Act which, in part, states a ''prosthetic devices (other than dental) which replace all or part of an internal body organ.'' They do not replace the function of an internal body organ and thus are not considered prosthetic devices under Medicare payment policy. In regard to BAHA, it is a bone conduction hearing aid device that is osseointegrated. There are currently only two hearing devices that are not statutorily excluded and are a covered Medicare item that fall into the prosthetic benefit category; namely, the cochlear implant and the auditory brainstem device. These two devices meet the definition of a prosthetic device in that they replace the function of the inner ear consistent with the definition of prosthetic devices described in section 1861(s)(8) of the Act.

C. Proposed Provisions

After further considering the statutory Medicare hearing aid exclusion under section 1862(a)(7) of the Act, and re-examining the different types of external and implanted devices, we propose to interpret the term ''hearing aid'' to include all types of air or bone conduction hearing aid devices, whether external, internal, or implanted, including, but not limited to, middle ear implants, osseointegrated devices, dental anchored bone conduction devices, and other types of external or non-invasive devices that mechanically stimulate the cochlea. We believe, based on our understanding of

how such devices function, that such devices are hearing aids that are not otherwise covered as prosthetic devices, in that they do not replace all or part of an internal body organ. Therefore, we propose to modify the regulation at § 411.15(d)(1) to specify that the hearing aid exclusion encompasses all types of air conduction and bone conduction hearing aids (external, internal, or implanted). Osseointegrated devices such as the BAHA are bone conduction hearing aids that mechanically stimulate the cochlea; therefore, we believe that the hearing aid exclusion applies to these devices and propose that Medicare should not cover these devices, consistent with our interpretation of section 1862(a)(7) of the Act. In addition, an NCD was issued for cochlear implant devices with the result that this determination and recent requests to expand coverage of hearing devices raises serious questions about the intent and scope of the Medicare coverage exclusion for hearing aids. It is for these reasons that we are addressing the hearing aid coverage exclusion in notice and comment rulemaking, and believe that the BAHA device qualifies as a hearing aid because it functions like other bone conduction hearing aids that are subject to the Medicare statutory coverage exclusion for hearing aids.

We continue to believe that the hearing aid exclusion does not apply to brain stem implants and cochlear implants because these devices directly stimulate the auditory nerve, replacing the function of the inner ear rather than aiding the conduction of sound as hearing aids do. Therefore, we are not proposing any changes to our current policy about brain stem implants and cochlear implants and how such implants fall outside of the hearing aid statutory exclusion (that is, such devices would fall outside the Medicare coverage exclusion for hearing aids and remain covered subject to the Medicare NCD 50.3 found at *https://www.cms.gov/Regulations-and-Guidance/Guidance/Manuals/downloads/ncd103c1_Part1.pdf*). We propose, however, to modify § 411.15(d)(2) to specifically note that such devices do not fall within the hearing aid exclusion.

We seek public comment on this proposal.

VIII. Definition of Minimal Self-Adjustment of Orthotics Under Competitive Bidding

A. Background

Section 1847 (a)(1)(A) of the Act mandates the implementation of CBPs throughout the United States for awarding contracts for furnishing competitively priced items and services, including OTS orthotics described in section 1847(a)(2)(C) of the Act (leg, arm, back or neck braces described in section 1861(s)(9) of the Act for which payment would otherwise be made under section 1834(h)) which require minimal self-adjustment for appropriate use and do not require expertise in trimming, bending, molding, assembling, or customizing to fit the individual. The regulation at 42 CFR 414.402 currently defines ''minimal self-adjustment'' as ''an adjustment that the beneficiary, caretaker for the beneficiary, or supplier of the device can perform and does not require the services of a certified orthotist (that is, an individual who is certified by either the American Board for Certification in Orthotics and Prosthetics, Inc., or the Board for Orthotist/Prosthetist Certification) or an individual who has specialized training.'' This current definition was proposed in the 71 FR 25669 (May 1, 2006) Notice for Proposed Rulemaking (NPRM) but did not include the term ''individual with specialized training.'' The definition was finalized in the 72 FR 18022 (April 10, 2007) Final Rule with the term ''individual with specialized training'' added after receiving comments that disagreed with the May 2006 definition and pointed out that occupational therapists, physical therapists, and physicians are licensed and trained to provide orthotics.

B. Current Issues

Since adoption of the minimal self-adjustment definition there has been some concerns raised by industry and other stakeholders regarding who is considered an individual with specialized training. We have had many inquiries and comments that this term is too ambiguous and left open for interpretation. In order to identify OTS orthotics for the purpose of implementing CBPs for these items and services in accordance with the statute, we need a clearer distinction between OTS orthotics and those that require more than minimal self-adjustment and expertise in custom fitting. In doing so, we believe it is essential to identify the credentials and training a supplier needs to have in order to be considered a supplier with expertise in custom fitting; therefore, we believe the term ''individual with specialized training'' must be clarified. We believe these professionals must have specialized training equivalent to a certified orthotist for the provision of custom fitted orthotic devices such that these professionals satisfy requirements concerning higher education, continuing education requirements, licensing, and certification/registration requirements so that they meet a minimum professional skill level in order to ensure the highest standard of care and safety for Medicare beneficiaries.

This would also help to prevent any supplier without expertise in custom fitting orthotics from potentially circumventing the competitive bidding process by furnishing custom fitting they are not qualified to provide in the event that they are not awarded a contract for furnishing OTS orthotics in their service area as the custom fitted devices are not statutorily included in the CBP.

In addition, for claims processing and payment system purposes under the CBP, we need to identify OTS orthotics, which we accomplish with codes in the HCPCS. The HCPCS codes are used on claims to identify the items and services furnished to the beneficiary, that is, to identify orthotics that are furnished OTS and subject to the CBP and to identify orthotics that have been custom fitted by suppliers with expertise. On February 9, 2012, CMS issued initial guidance identifying specific HCPCS codes considered OTS orthotics and provided a 60-day comment period posted at *http://www.cms.gov/Medicare/Medicare-Fee-for-Service-Payment/DMEPOSFeeSched/OTS_Orthotics.html.* We received 185 comments. There was no general consistency between the various commenters on which specific HCPCS codes the commenters believed were appropriately deemed OTS. Many commenters expressed their support for the proposed list while others made numerous useful recommendations to improve the OTS list. We considered each comment and performed a thorough review of the individual HCPCS codes and devices included in the codes to assess appropriate orthotic categorization. Through this process we identified HCPCS codes that described items that we believe are never furnished OTS, HCPCS codes that described items that are always furnished OTS, and HCPCS codes that described items that may or may not be furnished OTS, depending on whether more than minimal fitting and adjustment of a particular device by an expert is necessary for a particular patient. In order to address this issue we decided to create HCPCS codes for items that may or may not be custom fitted, depending on individual patient's needs, into separate codes that described the item when it has been furnished OTS and when it has been custom fitted. The new HCPCS codes

were published and became effective January 1, 2014 and are published at *http://www.cms.gov/Medicare/Medicare-Fee-for-Service-Payment/DMEPOSFeeSched/OTS_Orthotics.html.*

C. Proposed Provisions

Prefabricated orthotics are either furnished OTS or with custom fitting and are identified in the HCPCS. As noted above, with regard to minimal self-adjustment, § 414.402 in part identifies an individual with expertise in fitting as a certified orthotist or an individual with specialized training. Recently a DME Medicare Administrative Contractor (MAC) Web site Article entitled ''Correct Coding—Definitions used for Off-the-Shelf versus Custom Fitted Prefabricated Orthotics (Braces)—Revised,'' was published March 27, 2014, and included: A physician, a treating practitioner, an occupational therapist, or physical therapist in compliance with all applicable Federal and State licensure and regulatory requirements. The DME MAC published this article following the change in 2014 HCPCS codes for OTS and custom fitted orthotics as an education tool for Medicare enrolled DMEPOS suppliers. We believe physicians, treating practitioners, occupational therapists, and physical therapists are considered ''individuals with specialized training'' that possess training equivalent to a certified orthotist for the provision of custom fitted orthotic devices through their individual degree programs and continuing education requirements. In addition, physicians, treating practitioners, occupational therapists, and physical therapists possess equivalent or higher educational degrees, continuing education requirements, licensing, and certification and/or registration requirements. We believe these professionals meet a minimum professional skill level in order to ensure the highest standard of care and safety for Medicare beneficiaries. Each of these professionals has undergone medical training in various courses such as kinesiology and anatomy. For example, through coursework the named medical professionals gain a clinical understanding of the human body, proper alignment, normal range of motion, agonist and antagonist relationship, and biomechanics necessary to modify a custom fitted orthotic device properly.

Clinical providers such as assistants, fitters, and manufacturer representatives that work under the supervision of the individual with specialized training must do so as required under their governing body Code of Ethics and supervision standards as well as state licensure requirements. These individuals are not considered to have specialized training for the purposes of providing custom fitting; therefore, orthotics adjusted by these individuals but not by individuals with specialized training would still be considered OTS.

The current regulation of orthotic provision in the U.S. is inconsistent between individual States. There are currently 17 States that require licensure in P&O. In States that do require licensure for the provision of orthotics, individual states do not all recognize certified orthotic fitters and do not provide licensure for this level of provider. This inconsistency also prompts us to provide clarification on the individuals who are recognized as having specialized training for the purposes of determining what constitutes minimal self-adjustment of OTS orthotics.

We propose to update the definition of minimal self-adjustment in § 414.402 to codify an individual with specialized training includes: a physician defined in section 1861(r) of the Act, a treating practitioner defined at section 1861(aa)(5) (physician assistant, nurse practitioner, or clinical nurse specialist), an occupational therapist defined at 42 CFR 484.4, or physical therapist defined at 42 CFR 484.4, who is in compliance with all applicable Federal and State licensure and regulatory requirements for reasons discussed above. We seek comments on this proposal.

IX. Revision To Change of Ownership Rules To Allow Contract Suppliers To Sell Specific Lines of Business

A. Background

Section 1847(a) of the Act, as amended by section 302(b)(1) of the Medicare Prescription Drug, Improvement, and Modernization Act of 2003 (MMA) (Pub. L. 108–173), requires the Secretary to establish and implement CBPs in CBAs throughout the United States for contract award purposes for the furnishing of certain competitively priced DMEPOS items and services. The programs mandated by section 1847(a) of the Act are collectively referred to as the ''Medicare DMEPOS Competitive Bidding Program.'' The 2007 DMEPOS competitive bidding final rule (Medicare Program; Competitive Acquisition for Certain DMEPOS and Other Issues published in the **Federal Register** on April 10, 2007 (71 FR 17992)), required CBPs for certain Medicare Part B covered items of DMEPOS throughout the United States. The CBP, which was phased in over several years, utilizes bids submitted by qualified suppliers to establish applicable payment amounts under Medicare Part B for certain DMEPOS items for beneficiaries receiving services in designated CBAs.

CMS awards contracts to those suppliers who meet all of the competitive bidding requirements and whose composite bid amounts fall at or below the pivotal bid (the bid at which the capacity provided by qualified suppliers meets the demand for the item). These qualified suppliers will be offered a competitive bidding contract for that PC, provided there are a sufficient number of qualified suppliers (there must be at a minimum of 2) to serve the area. Contracts are awarded to multiple suppliers for each PC in each CBA and will be re-competed at least once every 3 years.

CMS specifies the duration of the contracts awarded to each contract supplier in the Request for Bid Instructions. We also conduct extensive bidder education where we inform bidders of the requirements and obligations of contract suppliers. Each winning supplier is awarded a single contract that includes all winning bids for all applicable CBAs and PCs. A competitive bidding contract cannot be subdivided. For example, if a contract supplier breaches its contract, the entire contract is subject to termination. In the Physician Fee Schedule final rule published on November 29, 2010, we stated that ''once a supplier's contract is terminated for a particular round due to breach of contract under the DMEPOS CBP, the contract supplier is no longer a DMEPOS contract supplier for any DMEPOS CBP PC for which it was awarded under that contract. This termination applies to all areas and PCs because there is only one contract that encompasses all CBAs and PCs for which the supplier was awarded a contract.'' (75 FR 73578)

A competitive bidding contract cannot be sold. However, CMS may permit the transfer of a contract to an entity that merges with or acquires a competitive bidding contract supplier if the new owner assumes all rights, obligations, and liabilities of the competitive bidding contract pursuant to regulations at 42 CFR 414.422(d).

For the transfer of a contract to be considered, the CHOW must include the assumption of the entire contract, including all CBAs and PCs awarded under the contract.

B. Proposed Provisions

We propose to revise § 414.422(d) to permit transfer of part of a competitive bidding contract under specific

circumstances. We believe requiring a transfer of the entire contract to a successor entity in all circumstances may be overly restrictive, and may be preventing routine merger and acquisition activity. To maintain integrity of the bidding process we award one contract that includes all the CBA/PCs combinations for which the supplier qualifies for and accepts as a contract supplier. This proposed rule would establish an exception to the prohibition against transferring part of a contract by allowing a contract supplier to sell a distinct company (for example, an affiliate, subsidiary, sole proprietor, corporation, or partnership) which furnishes one or more specific PCs or serves one or more specific CBAs and transfer the portion of the contract initially serviced by the distinct company, including the PC(s), CBA(s), and location(s), to a qualified successor entity who meets all competitive bidding requirements (i.e., financial standards, licensing, and accreditation). The proposed exception would not apply to existing contracts but would apply to contracts issued in all future rounds of the program, starting with the Round 2 Recompete. As required in § 414.422(d) we are also requiring a contract supplier that wants to sell a distinct company which furnishes one or more specific PCs or serves one or more specific CBAs to notify CMS 60 days before the anticipated date of a change of ownership. If documentation is required to determine if a successor entity is qualified that documentation must be submitted within 30 days of anticipated change of ownership, pursuant to § 414.422(d)(2)(ii). We propose that CMS would then modify the contract of the original contract supplier by removing the affected PC(s), CBA(s) and locations from the original contract. For CMS to approve the transfer, we propose that several conditions would have to be met. First, we propose that every CBA, PC, and location of the company being sold must be transferred to the new owner. Second, we propose that all CBAs and PC's in the original contract that are not explicitly transferred by CMS must remain unchanged in that original contract for the duration of the contract period unless transferred by CMS pursuant to a subsequent CHOW. Third, we propose that all requirements in 42 CFR 414.422(d)(2) must be met. Fourth, we propose that the sale of the company must include all of the company's assets associated with the CBA and/or PC(s). Finally, we propose that CMS must determine that transferring part of the original contract will not result in disruption of service or harm to beneficiaries. No transfer will be permitted for purposes of this program if we determine that the new supplier does not meet the competitive bidding requirements (such as financial requirements) and does not possess all applicable licenses and accreditation for the product(s). In order for the transfer to occur, the contract supplier and successor entity must enter into a novation agreement with CMS and the successor entity must accept all rights, responsibilities and liabilities under the competitive bidding contract. Part of a novation agreement requires successor entity to ''seamlessly continue to service beneficiaries.'' We believe that these proposed conditions are necessary for proper administration of the program, to ensure that payments are made correctly and also to ensure continued contract accountability and viability along with continuity of service and access to beneficiaries. We specifically invite comments on whether more or different conditions would be appropriate.

In addition, we are proposing to update the current CHOW regulation, § 414.422(d) to clarify the language to make it easier to comprehend. The proposed changes reformat the regulation so that the requirements applicable to successor entities and new entities are listed separately. These proposed changes to the regulation are technical, and not substantive in nature. CMS seeks comments on all changes proposed for § 414.422.

X. Proposed Changes to the Appeals Process for Termination of Competitive Bidding Contract

We propose to modify the DMEPOS CBP's appeals process for termination of competitive bidding contracts under § 414.423. First, we propose to modify the effective date of termination in the termination notice CMS sends to a contract supplier found to be in breach of contract. Currently, the regulation at 42 CFR 414.423(b)(2)(vi) indicates that the effective date of termination is 45 days from the date of the notification letter unless a timely hearing request ''has been'' filed or corrective action plan ''has been'' submitted within 30 days of the effective date of the notification letter (emphasis added). We propose to change these references to provide additional clarification. This change would emphasize that the contract will automatically be terminated if the supplier does not time file a hearing request or submit corrective action plan. This proposed change is also being addressed at 42 CFR 414.423(l). We propose deleting the lead-in sentence, as it does not properly lead into the first paragraph. Additionally, we propose inserting language from the lead-in sentence in the second paragraph to indicate that the contract supplier, ''whose contract has been terminated,'' must notify beneficiaries of the termination of their contract. Second, we propose to modify the deadline by which a supplier whose competitive bidding contract is being terminated must notify affected beneficiaries that it is no longer a contract supplier. Current regulations at 42 CFR 414.423(l)(2)(i) require a contract supplier to provide this notice within 15 days of receipt of a final notice of termination. We propose to change the beneficiary notification deadline to no later than 15 days prior to the effective date of termination. This proposed change is intended to provide beneficiaries with the protection of advanced notice prior to a contract supplier being terminated from the CBP so they have sufficient time to plan/coordinate their current and future DMEPOS needs.

XI. Technical Change Related To Submitting Bids for Infusion Drugs Under the DMEPOS Competitive Bidding Program

The standard payment rules for drugs administered through infusion pumps covered as DME are located at section 1842(o)(1)(D) of the Act, and mandate that payment for infusion drugs furnished through a covered item of DME on or after January 1, 2004, is equal to 95 percent of the average wholesale price for such drug in effect on October 1, 2003. The regulations implementing section 1842(o)(1)(D) of the Act are located at 42 CFR 414.707(a), under Subpart I of Part 414. Section 1847(a)(2)(A) of the Act mandates the establishment of CBPs for covered items defined in section 1834(a)(13), for which payment would otherwise be made under section 1834(a), including items used in infusion and drugs (other than inhalation drugs) and supplies used in conjunction with DME. Section 1847(b)(2)(A)(iii) of the Act prohibits the awarding of contracts under a CBP unless the total amounts to be paid to contract suppliers are expected to be less than would otherwise be paid. The regulations implementing section 1847(b)(2)(A)(iii) of the Act with respect to items paid on a fee schedule basis under Subparts C and D of Part 414 are located at 42 CFR 414.412(b)(2), and specify that ''the bids submitted for each item in a PC cannot exceed the payment amount that would otherwise apply to the item under Subpart C or Subpart D of this part.'' In addition, the regulations regarding the conditions for awarding

contracts under the DMEPOS CBP at 42 CFR 414.414(f) state that ''a contract is not awarded under this subpart unless CMS determines that the amounts to be paid to contract suppliers for an item under a CBP are expected to be less than the amounts that would otherwise be paid for the same item under subpart C or subpart D.'' The regulations implementing of section 1847(b)(2)(A)(iii) of the Act did not address payments for drugs under subpart I, which was an oversight. We therefore propose to revise §§ 414.412(b)(2) and 414.414(f) to include a reference to drugs paid under subpart I in addition to items paid under subparts C or D. We propose to revise § 414.412(b)(2) to specify that the bid amounts submitted for each drug in a PC cannot exceed the payment limits that would otherwise apply to the drug under subpart I of part 414. This concerns certain infusion drugs with payment limits equal to 95 percent of the average wholesale price for the drug in effect on October 1, 2003, in accordance with § 414.707(a)(3). See *http://www.ecfr.gov/cgi-bin/text-idx?c=ecfr&SID=7065f17b411e37b3788b6e7fcce21f89&rgn=div8&view=text&node=42:3.0.1.1.1.9.1.3&idno=42*. We propose to revise § 414.414(f) to specify that a contract is not awarded under this subpart unless CMS determines that the amounts to be paid to contract suppliers for infusion drugs provided with respect to external infusion pumps under a CBP are expected to be less than the amounts that would otherwise be paid to suppliers for the same drug under subpart I of part 414. We seek comments on this proposal.

XII. Accelerating Health Information Exchange

HHS believes all patients, their families, and their healthcare providers should have consistent and timely access to their health information in a standardized format that can be securely exchanged between the patient, providers, and others involved in the patient's care. (HHS August 2013 Statement, ''Principles and Strategies for Accelerating Health Information Exchange''). The Department is committed to accelerating health information exchange (HIE) through the use of electronic health records (EHRs) and other types of health information technology (HIT) across the broader care continuum through a number of initiatives including: (1) Alignment of incentives and payment adjustments to encourage provider adoption and optimization of HIT and HIE services through Medicare and Medicaid payment policies, (2) adoption of common standards and certification requirements for interoperable HIT, (3) support for privacy and security of patient information across all HIE-focused initiatives, and (4) governance of health information networks. These initiatives are designed to encourage HIE among health care providers, including professionals and hospitals eligible for the Medicare and Medicaid EHR Incentive Programs and those who are not eligible for the EHR Incentive programs, and are designed to improve care delivery and coordination across the entire care continuum. For example, the Transition of Care Measure #2 in Stage 2 of the Medicare and Medicaid EHR Incentive Programs requires HIE to share summary records for at least 10 percent of care transitions. In addition, to increase flexibility in ONC's regulatory certification structure and expand HIT certification, ONC has proposed a voluntary 2015 Edition EHR Certification rule to more easily accommodate HIT certification for technology used by all health care settings to facilitate greater HIE across the entire care continuum.

We believe that HIE and the use of certified EHRs can effectively and efficiently help ESRD facilities and nephrologists improve internal care delivery practices, support management of patient care across the continuum, and support the reporting of electronically specified clinical quality measures (eCQMs). More information on the 2015 Edition EHR certification rule can be found at: *http://healthit.gov/policy-researchers-implementers/standards-and-certification-regulations*.

XIII. Collection of Information Requirements

A. Legislative Requirement for Solicitation of Comments

Under the Paperwork Reduction Act of 1995, we are required to provide 60-day notice in the **Federal Register** and solicit public comment before a collection of information requirement is submitted to the Office of Management and Budget (OMB) for review and approval. In order to fairly evaluate whether an information collection requirement should be approved by OMB, section 3506(c)(2)(A) of the Paperwork Reduction Act of 1995 requires that we solicit comment on the following issues:

- The need for the information collection and its usefulness in carrying out the proper functions of our agency.
- The accuracy of our estimate of the information collection burden.
- The quality, utility, and clarity of the information to be collected.
- Recommendations to minimize the information collection burden on the affected public, including automated collection techniques.

B. Requirements in Regulation Text

In section II.F of this proposed rule, we are proposing changes to regulatory text for the ESRD PPS in CY 2015. However, the changes that are being proposed do not impose any new information collection requirements.

C. Additional Information Collection Requirements

This proposed rule does not impose any new information collection requirements in the regulation text, as specified above. However, this proposed rule does make reference to several associated information collections that are not discussed in the regulation text contained in this document. The following is a discussion of these information collections.

1. ESRD QIP

The information collection requirements associated with the ESRD QIP are currently approved under OMB control number 0938–0386.

a. Data Validation Requirements for the PY 2017 ESRD QIP

Section III.F.9 in this proposed rule outlines our data validation proposals for PY 2017. Specifically, we propose to randomly sample records from 300 facilities as part of our continuing pilot data-validation program. Each sampled facility would be required to produce approximately 10 records, and the sampled facilities will be reimbursed by our validation contractor for the costs associated with copying and mailing the requested records. The burden associated with these validation requirements is the time and effort necessary to submit the requested records to a CMS contractor. We estimate that it will take each facility approximately 2.5 hours to comply with this requirement. If 300 facilities are asked to submit records, we estimate that the total combined annual burden for these facilities will be 750 hours (300 facilities × 2.5 hours). According to the Bureau of Labor Statistics, the mean hourly wage of a registered nurse is $33.13/hour. Since we anticipate that nurses (or administrative staff who would be paid at a lower hourly wage) would submit this data, we estimate that the aggregate cost of the CROWNWeb data validation would be $24,847.50 (750 hours × $33.13/hour) total or $82.83 ($24,847.50/300 facilities) per facility in the sample.

Under the proposed feasibility study for validating data reported to the NHSN Dialysis Event Module, we propose to randomly select nine facilities to provide CMS with a quarterly list of all positive blood cultures drawn from their patients during the quarter, including any positive blood cultures collected on the day of, or the day following, a facility patient's admission to a hospital. A CMS contractor will review the lists to determine if dialysis events for the patients in question were accurately reported to the NHSN Dialysis Event Module. If we determine that additional medical records are needed to validate dialysis events, facilities will be required to provide those records within 60 days of a request for this information. We estimate that the burden associated with this feasibility study will be the time and effort necessary for each selected facility to compile and submit to CMS a quarterly list of positive blood cultures drawn from its patients. We estimate that it will take each participating facility approximately two hours per quarter to comply with this submission. If nine facilities are asked to provide lists, we estimate the quarterly burden for these facilities would be 72 hours per year (9 facilities × 2 hours/quarter × 4 quarters/year). Again, we estimate the mean hourly wage of a registered nurse to be $33.13/hour, and we anticipate nurses (or administrative staff who would be paid at a lower hourly wage) would be responsible for preparing and submitting the list. Because we anticipate nurses (or administrative staff who would be paid at a lower hourly rate) would compile and submit these data, we estimate that the aggregate annual cost of the feasibility study to validate NHSN data would be $2,385.36 (72 hours × $33.13/hour) total or $265.04 per facility ($2,385.36/9 facilities).

b. Proposed NHSN Healthcare Personnel Influenza Vaccination Reporting Measure for PY 2018

We are proposing to include, beginning with the PY 2018 ESRD QIP, a measure requiring facilities to report healthcare personnel influenza vaccination data to NHSN. The NHSN is a secure, Internet-based surveillance system which is maintained and managed by CDC. Many dialysis facilities already submit NHSN Bloodstream Infection clinical measure data to NHSN. Specifically, we are proposing to require facilities to submit on an annual basis an HCP Influenza Vaccination Summary Form to NHSN, according to the specifications available in the NHSN Healthcare Personnel Safety Component Protocol. We estimate the burden associated with this measure to be the time and effort necessary for facilities to complete and submit the HCP Influenza Vaccination Summary Form on an annual basis. We estimate that approximately 5,996 facilities will treat ESRD patients in PY 2018. We estimate it will take each facility approximately 75 minutes to collect and submit the data necessary to complete the Healthcare Personnel Influenza Vaccination Summary Form on an annual basis. Therefore, the estimated total annual burden associated with reporting this measure in PY 2018 is 7,495 hours [(75/60) hours × 5,996 facilities]. Again, we estimate the mean hourly wage of a registered nurse to be $33.13, and we anticipate nurses (or administrative staff who would be paid at a lower hourly wage) would be responsible for this reporting. In total, we believe the cost for all ESRD facilities to comply with the reporting requirements associated with the NHSN Healthcare Personnel Influenza Vaccination reporting measure would be approximately $248,309 (7,495 hours × $33.13/hour) total, or $41.37 ($248,309/5,996 facilities) per facility.

XIV. Response to Comments

Because of the large number of public comments we normally receive on **Federal Register** documents, we are not able to acknowledge or respond to them individually. We will consider all comments we receive by the date and time specified in the **DATES** section of this preamble, and, when we proceed with a subsequent document, we will respond to the comments in the preamble to that document.

XV. Economic Analyses

A. Regulatory Impact Analysis

1. Introduction

We examined the impacts of this proposed rule as required by Executive Order 12866 (September 30, 1993, Regulatory Planning and Review) and Executive Order 13563 on Improving Regulation and Regulatory Review (January 11, 2011). Executive Orders 12866 and 13563 direct agencies to assess all costs and benefits of available regulatory alternatives and, if regulation is necessary, to select regulatory approaches that maximize net benefits (including potential economic, environmental, public health and safety effects, distributive impacts, and equity). Executive Order 13563 emphasizes the importance of quantifying both costs and benefits of reducing costs, harmonizing rules, and promoting flexibility. This rule has been designated economically significant under section 3(f)(1) of Executive Order 12866. Accordingly, the rule has been reviewed by the Office of Management and Budget. We have prepared a Regulatory Impact Analysis that to the best of our ability presents the costs and benefits of the proposed rule. We solicit comments on the regulatory impact analysis provided.

2. Statement of Need

This rule proposes a number of routine updates for renal dialysis services in CY 2015 and proposes several policy changes to the ESRD PPS. The routine updates include proposed updates to the wage index values, the wage index budget-neutrality adjustment factor, and the outlier payment threshold amounts. The proposed policy changes to the ESRD PPS include the revisions to the ESRDB market basket, changes in the CBSA delineations, changes to the labor-related share, clarifications in the low-volume payment adjustment, and additions and corrections to the ICD–10 codes that will be used for the comorbidity payment adjustment when compliance with ICD–10 is required beginning October 1, 2015. In addition, this rule implements sections 1881(b)(14)(F)(i) and (I), as amended by section 217 (b)(1) and (2) of PAMA, under which the drug utilization adjustment transition is eliminated and a 0.0 percent update to the ESRD PPS base rate is imposed in its place. This rule also implements the delay in payment for oral-only drugs used for the treatment of ESRD under the ESRD PPS until January 1, 2024 as required by section 217(a) of PAMA. Failure to publish this proposed rule would result in ESRD facilities not receiving appropriate payments in CY 2015.

This rule proposes to implement requirements for the ESRD QIP by proposing to adopt measure sets for the PYs 2017 and 2018 programs, as directed by section 1881(h) of the Act. Failure to propose requirements for the PY 2017 ESRD QIP would prevent continuation of the ESRD QIP beyond PY 2016. In addition, proposing requirements for the PY 2018 ESRD QIP provides facilities with more time to review and fully understand new measures before their implementation in the ESRD QIP.

This proposed rule proposes to establish a methodology for adjusting DMEPOS payment amounts using information from the Medicare DMEPOS CBP. The proposed rule would also phase in special payment rules for certain DME and enteral nutrition in a limited number of areas

under the Medicare DMEPOS CBP. This proposed rule also proposes to clarify the Medicare hearing aid coverage exclusion under section 1862(a)(7). In addition, this proposed rule would modify the definition of minimal self-adjustment at § 414.402 to indicate what specialized training is needed by suppliers to provide custom fitting services if they are not certified orthotists. Finally, if finalized, this proposed rule would provide clarification of the CHOW under the Medicare DMEPOS CBP.

3. Overall Impact

We estimate that the proposed revisions to the ESRD PPS will result in an increase of approximately $30 million in payments to ESRD facilities in CY 2015, which includes the amount associated with updates to outlier threshold amounts, updates to the wage index, changes in CBSA delineations, and the labor-related share.

For PY 2017, we estimate that the proposed requirements related to the ESRD QIP will cost approximately $27 thousand total, and the payment reductions will result in a total impact of approximately $16 million across all facilities. For PY 2018, we estimate that the proposed requirements related to the ESRD QIP will cost approximately $248 thousand total, and the payment reductions will result in a total impact of approximately $6.4 million across all facilities, resulting in a total impact from the proposed ESRD QIP of approximately $6.6 million.

We estimate that the proposed methodology for adjusting DMEPOS payment amounts using information from DMEPOS CBPs would save over $7 billion over FY 2016–2020. The savings would be primarily achieved from the reduced payment amounts for items and services.

We estimate the special payment rules would not have a negative impact on beneficiaries and suppliers, or on the Medicare program. Contract suppliers are responsible for furnishing items and services needed by the beneficiary, and the cost to suppliers for furnishing these items and services generally would not change based on whether or not the equipment and related items and services are paid for separately under a capped rental payment method. Because the supplier's bids would reflect the cost of furnishing items in accordance with the new payment rules, we expect the overall savings generally would be the same as they are under the current payment rules. Furthermore, as indicated above, the special payment rules would be phased in under a limited number of areas first to determine impact on the program, beneficiaries, and suppliers, including their effects on cost, quality, and access before expanding to other areas after notice and comment rulemaking, if supported by evaluation results. We believe that the special payment rules would give beneficiaries more choice and flexibility in changing suppliers. We estimate the proposed clarification of the statutory Medicare hearing aid coverage exclusion leading to withdrawal of coverage for bone anchored hearing aid (BAHA) devices would not have a significant fiscal impact on the Medicare program because the Medicare program expenditure for BAHA paid under Medicare during the period CY2005 through CY 2013 was less than 9,000,000 per year. This proposed regulation would provide guidance as to coverage of DME with regard to the statutory exclusion. The proposed rule proposes to specify that cochlear implants and brain stem implants are not hearing aids subject to the statutory exclusion and therefore, proposes no change to the current Medicare coverage status for these items.

We estimate that the proposed clarification of the definition of minimal self-adjustment would have no significant impact on program expenditures or access to orthotics. This proposed clarification would impact suppliers furnishing custom fitted orthotics that do not have the expertise necessary to make more than minimal adjustments to an orthotic that a beneficiary or caregiver could be trained to make. The impact on these few suppliers will vary according to the caseload of custom fitted orthotics provided by an individual supplier. However, we believe the majority of custom fitted devices are currently being furnished by an individual with expertise.

We estimate clarifying the CHOW under the Medicare DMEPOS CBP would have no significant impact to DMEPOS suppliers.

B. Detailed Economic Analysis

1. CY 2015 End-Stage Renal Disease Prospective Payment System

a. Effects on ESRD Facilities

To understand the impact of the changes affecting payments to different categories of ESRD facilities, it is necessary to compare estimated payments in CY 2014 to estimated payments in CY 2015. To estimate the impact among various types of ESRD facilities, it is imperative that the estimates of payments in CY 2014 and CY 2015 contain similar inputs. Therefore, we simulated payments only for those ESRD facilities for which we are able to calculate both current payments and new payments.

For this proposed rule, we used the December 2013 update of CY 2013 National Claims History file as a basis for Medicare dialysis treatments and payments under the ESRD PPS. We updated the 2013 claims to 2014 and 2015 using various updates. The updates to the ESRD PPS base rate are described in section II.B of this proposed rule. Table 38 shows the impact of the estimated CY 2015 ESRD payments compared to estimated payments to ESRD facilities in CY 2014.

TABLE 38—IMPACT OF PROPOSED CHANGES IN PAYMENTS TO ESRD FACILITIES OR CY 2015 PROPOSED RULE

Facility type	Number of facilities	Number of treatments (in millions)	Effect of 2015 changes in outlier policy %	Effect of 2015 changes in wage indexes, CBSA designations and labor-related share %	Effect of 2015 changes in payment rate update %	Effect of total 2015 changes %
	A	B	C	D	E	F
All Facilities	5,996	39.1	0.3	0.0	0.0	0.3
Type:						
Freestanding	5,520	36.6	0.3	0.0	0.0	0.3
Hospital based	476	2.5	0.3	0.2	0.0	0.5
Ownership Type:						

TABLE 38—IMPACT OF PROPOSED CHANGES IN PAYMENTS TO ESRD FACILITIES OR CY 2015 PROPOSED RULE—Continued

Facility type	Number of facilities	Number of treatments (in millions)	Effect of 2015 changes in outlier policy %	Effect of 2015 changes in wage indexes, CBSA designations and labor-related share %	Effect of 2015 changes in payment rate update %	Effect of total 2015 changes %
	A	B	C	D	E	F
Large dialysis organization	4,150	27.5	0.3	−0.1	0.0	0.2
Regional chain	871	5.9	0.2	0.2	0.0	0.4
Independent	582	3.6	0.2	0.2	0.0	0.4
Hospital based [1]	393	2.1	0.3	0.1	0.0	0.4
Geographic Location:						
Rural	1,212	5.9	0.3	−0.8	0.0	−0.5
Urban	4,784	33.3	0.3	0.1	0.0	0.4
Census Region:						
East North Central	979	5.8	0.3	−0.3	0.0	0.0
East South Central	497	2.9	0.3	−1.2	0.0	−0.9
Middle Atlantic	661	4.8	0.3	0.9	0.0	1.1
Mountain	352	1.9	0.2	−0.1	0.0	0.1
New England	177	1.3	0.3	1.3	0.0	1.5
Pacific [2]	710	5.4	0.2	1.5	0.0	1.7
Puerto Rico and Virgin Islands	42	0.3	0.3	−3.9	0.0	−3.6
South Atlantic	1,333	9.1	0.3	−0.6	0.0	−0.3
West North Central	438	2.0	0.3	−0.2	0.0	0.0
West South Central	807	5.6	0.3	−0.6	0.0	−0.3
Facility Size:						
Less than 4,000 treatments [3]	1,086	2.7	0.3	−0.3	0.0	0.0
4,000 to 9,999 treatments	2,226	10.5	0.3	−0.3	0.0	0.0
10,000 or more treatments	2,523	25.7	0.3	0.1	0.0	0.4
Unknown	161	0.3	0.3	−0.1	0.0	0.2
Percentage of Pediatric Patients:						
Less than 2%	5,885	38.7	0.3	0.0	0.0	0.3
Between 2 and 19%	48	0.4	0.3	0.0	0.0	0.2
Between 20 and 49%	12	0.0	0.1	−0.4	0.0	−0.3
More than 50%	51	0.0	0.0	0.2	0.0	0.3

[1] Includes hospital-based ESRD facilities not reported to have large dialysis organization or regional chain ownership.
[2] Includes ESRD facilities located in Guam, American Samoa, and the Northern Mariana Islands.
[3] Of the 1,086 ESRD facilities with less than 4,000 treatments, approximately 422 would be expected to qualify for the low-volume adjustment in 2015. This estimate is based on actual claims for 2013 plus the number of hospital-based facilities that may newly qualify with a change in policy. The low-volume adjustment is mandated by Congress, and is not applied to pediatric patients. The impact to these low-volume facilities is a 0.4 percent decrease in payments.
Note: Totals do not necessarily equal the sum of rounded parts, as percentages are multiplicative, not additive.

Column A of the impact table indicates the number of ESRD facilities for each impact category and column B indicates the number of dialysis treatments (in millions). The overall effect of the proposed changes to the outlier payment policy described in section II.B.4 of this proposed rule is shown in column C. For CY 2015, the impact on all ESRD facilities as a result of the changes to the outlier payment policy will be a 0.3 percent increase in estimated payments. The estimated impact of the changes to outlier payment policy ranges from a 0.0 percent to a 0.3 percent increase. Nearly all ESRD facilities are anticipated to experience a positive effect in their estimated CY 2015 payments as a result of the proposed outlier policy changes.

Column D shows the effect of the wage index, new CBSA delineations, and labor-related share on ESRD facilities and reflects the CY 2015 wage index values for the ESRD PPS payments. Facilities located in the census region of Puerto Rico and the Virgin Islands would receive a 3.9 percent decrease in estimated payments in CY 2015. Since most of the facilities in this category are located in Puerto Rico, the decrease is primarily due to the change in the labor-related share. The other categories of types of facilities in the impact table show changes in estimated payments ranging from a 3.9 percent decrease to a 1.5 percent increase due to the update of the wage indexes, CBSA delineations and labor-related share.

Column E shows the effect of the ESRD PPS payment rate update of 0.0 percent as required by section 1881(b)(14)(F) and (I) as amended by section 217 of PAMA.

Column F reflects the overall impact (that is, the effects of the proposed outlier policy changes, the proposed wage index, the proposed CBSA delineations, the proposed labor-related share, and the effect of the payment rate update. We expect that overall ESRD facilities will experience a 0.3 percent increase in estimated payments in 2015. ESRD facilities in Puerto Rico and the Virgin Islands are expected to receive a 3.6 percent decrease in their estimated payments in CY 2015. This larger decrease is primarily due to the negative impact of the change in the labor-related share. The other categories of types of facilities in the impact table show impacts ranging from a decrease of 0.9 percent to increase of 1.7 percent in their 2015 estimated payments.

b. Effects on Other Providers

Under the ESRD PPS, ESRD facilities are paid directly for the renal dialysis bundle and other provider types such as laboratories, DME suppliers, and pharmacies, may no longer bill Medicare directly for renal dialysis services. Rather, effective January 1, 2011, such other providers can only furnish renal dialysis services under arrangements with ESRD facilities and must seek payment from ESRD facilities rather than Medicare. Under the ESRD PPS, Medicare pays ESRD facilities one payment for renal dialysis services, which may have been separately paid to suppliers by Medicare prior to the implementation of the ESRD PPS. Therefore, in CY 2015, we estimate that the proposed ESRD PPS will have zero impact on these other providers.

c. Effects on the Medicare Program

We estimate that Medicare spending (total Medicare program payments) for ESRD facilities in CY 2015 will be approximately $9.1 billion. This estimate takes into account a projected increase in fee-for-service Medicare dialysis beneficiary enrollment of 3.2 percent in CY 2015.

d. Effects on Medicare Beneficiaries

Under the ESRD PPS, beneficiaries are responsible for paying 20 percent of the ESRD PPS payment amount. As a result of the projected 0.3 percent overall increase in the proposed ESRD PPS payment amounts in CY 2015, we estimate that there will be an increase in beneficiary co-insurance payments of 0.3 percent in CY 2015, which translates to approximately $10 million.

e. Alternatives Considered

For this proposed rule, we proposed to implement a 50/50 blended wage index for CY 2015 that would apply to all ESRD facilities. Specifically, the proposal would transition all ESRD facilities experiencing an impact, or not, due to the implementation of the new CBSA delineations. We considered proposing to implement the new CBSA delineations without a transition; however we decided to mitigate the impact this change would have on ESRD facilities that may experience a decrease in payments due to the change.

In addition, for CY 2015 we proposed to implement a revised 50.673 percent labor-related share using a 2-year transition. This proposal would transition all ESRD facilities from the current labor-related share of 41.737 percent to the revised labor-related share of 50.673 percent. We considered proposing to implement the labor-related share without a transition; however we decided to mitigate the impact this change would have on ESRD facilities that may experience a decrease in payments due to the change.

2. End-Stage Renal Disease Quality Incentive Program

a. Effects of the PY 2017 ESRD QIP

The ESRD QIP provisions are intended to prevent possible reductions in the quality of ESRD dialysis facility services provided to beneficiaries as a result of payment changes under the ESRD PPS. The methodology that we are proposing to use to determine a facility's TPS for PY 2017 is described in section III.F.5 of this proposed rule. Any reductions in ESRD PPS payments as a result of a facility's performance under the PY 2017 ESRD QIP would affect the facility's reimbursement rates in CY 2017.

We estimate that, of the total number of dialysis facilities (including those not receiving a TPS), approximately 20 percent or 1,227 of the facilities would likely receive a payment reduction in PY 2017. Facilities that do not receive a TPS are not eligible for a payment reduction.

In conducting our impact assessment, we have assumed that there will be an initial count of 5,996 dialysis facilities paid under the ESRD PPS. Table 39 shows the overall estimated distribution of payment reductions resulting from the PY 2017 ESRD QIP.

TABLE 39—ESTIMATED DISTRIBUTION OF PY 2017 ESRD QIP PAYMENT REDUCTIONS

Payment reduction (percent)	Number of facilities	Percent of facilities
0.0	4,484	78.5
0.5	887	15.5
1.0	264	4.6
1.5	58	1.0
2.0	18	0.3

Note: This table excludes 285 facilities that we estimate will not receive a payment reduction because they will not report enough data to receive a Total Performance Score.

To estimate whether or not a facility would receive a payment reduction in PY 2017, we scored each facility on achievement and improvement on several measures we have previously finalized and for which there were available data from CROWNWeb and Medicare claims. Measures used for the simulation are shown in Table 40.

TABLE 40—DATA USED TO ESTIMATE PY 2017 ESRD QIP PAYMENT REDUCTIONS

Measure	Period of time used to calculate achievement thresholds, performance standards, benchmarks, and improvement thresholds	Performance period
Vascular Access Type:		
% Fistula	Jan 2012—Dec 2012	Jan 2013—Dec 2013.
% Catheter	Jan 2012—Dec 2012	Jan 2013—Dec 2013.
Kt/V:		
Adult HD	Jan 2012—Dec 2012	Jan 2013—Dec 2013.
Adult PD	Jan 2012—Dec 2012	Jan 2013—Dec 2013.
Pediatric HD	Jan 2012—Dec 2012	Jan 2013—Dec 2013.
Hypercalcemia	May 2012—Dec 2012	Jan 2013—Dec 2013.

TABLE 40—DATA USED TO ESTIMATE PY 2017 ESRD QIP PAYMENT REDUCTIONS—Continued

Measure	Period of time used to calculate achievement thresholds, performance standards, benchmarks, and improvement thresholds	Performance period
SRR	Jan 2011—Dec 2011	Jan 2012—Dec 2012.

Clinical measure topic areas with less than 11 cases for a facility were not included in that facility's Total Performance Score. Each facility's Total Performance Score was compared to the estimated minimum Total Performance Score and the payment reduction table found in section III.F.8 of this proposed rule. Facility reporting measure scores were estimated using available data from CY 2013. Facilities were required to have a score on at least one clinical and one reporting measure in order to receive a Total Performance Score.

To estimate the total payment reductions in PY 2017 for each facility resulting from this proposed rule, we multiplied the total Medicare payments to the facility during the one year period between January 2013 and December 2013 by the facility's estimated payment reduction percentage expected under the ESRD QIP, yielding a total payment reduction amount for each facility: (Total ESRD payment in January 2013 through December 2013 times the estimated payment reduction percentage). For PY 2017, the total payment reduction for the 1,227 facilities estimated to receive a reduction is approximately $11.9 million ($11,873,127). Further, we estimate that the total costs associated with the collection of information requirements for PY 2017 described in section VIII.1.a of this proposed rule would be approximately $27 thousand for all ESRD facilities. As a result, we estimate that ESRD facilities will experience an aggregate impact of approximately $11.9 million ($27,232 + $11,873,127 = $11,900,359) in PY 2017, as a result of the PY 2017 ESRD QIP.

Table 41 below shows the estimated impact of the finalized ESRD QIP payment reductions to all ESRD facilities for PY 2017. The table estimates the distribution of ESRD facilities by facility size (both among facilities considered to be small entities and by number of treatments per facility), geography (both urban/rural and by region), and by facility type (hospital based/freestanding facilities). Given that the time periods used for these calculations will differ from those we are proposing to use for the PY 2017 ESRD QIP, the actual impact of the PY 2017 ESRD QIP may vary significantly from the values provided here.

TABLE 41—IMPACT OF PROPOSED QIP PAYMENT REDUCTIONS TO ESRD FACILITIES IN PY 2017

	Number of facilities	*Number of treatments 2013 (in millions)*	*Number of facilities with QIP score*	*Number of facilities expected to receive a payment reduction*	*Payment reduction (percent change in total ESRD payments)*
All Facilities	5,996	39.1	5,711	1,227	−0.14
Facility Type:					
Freestanding	5,520	36.6	5,289	1,093	−0.13
Hospital-based	476	2.5	422	134	−0.24
Ownership Type:					
Large Dialysis	4,150	27.5	3,995	786	−0.12
Regional Chain	871	5.9	836	169	−0.14
Independent	582	3.6	534	157	−0.22
Hospital-based (non-chain)	393	2.1	346	115	−0.25
Facility Size:					
Large Entities	5,021	33.5	4,831	955	−0.12
Small Entities [1]	975	5.7	880	272	−0.23
Rural Status:					
1) Yes	1,212	5.9	1,167	187	−0.10
2) No	4,784	33.3	4,544	1,040	−0.15
Census Region:					
Northeast	792	5.8	770	160	−0.14
Midwest	1,341	7.7	1,276	314	−0.16
South	2,527	17.5	2,460	504	−0.12
West	1,015	7.1	966	159	−0.10
US Territories [2]	321	1.0	239	90	−0.33
Census Division:					
East North Central	979	5.8	909	249	−0.19
East South Central	497	2.9	475	92	−0.12
Middle Atlantic	661	4.8	632	139	−0.16
Mountain	352	1.9	335	55	−0.10
New England	177	1.3	168	29	−0.13
Pacific	710	5.4	671	119	−0.11
South Atlantic	1,333	9.1	1,279	314	−0.15
West North Central	438	2.0	417	81	−0.12
West South Central	807	5.6	783	125	−0.10
US Territories [2]	42	0.3	42	24	−0.42
Facility Size (# of total treatments):					

TABLE 41—IMPACT OF PROPOSED QIP PAYMENT REDUCTIONS TO ESRD FACILITIES IN PY 2017—Continued

	Number of facilities	*Number of treatments 2013 (in millions)*	*Number of facilities with QIP score*	*Number of facilities expected to receive a payment reduction*	*Payment reduction (percent change in total ESRD payments)*
Less than 4,000 treatments	1,086	2.7	928	211	−0.17
4,000–9,999 treatments	2,226	10.5	2,174	423	−0.12
Over 10,000 treatments	2,523	25.7	2,514	557	−0.14
Unknown	161	0.3	95	36	−0.38

[1] Small Entities include hospital-based and satellite facilities and non-chain facilities based on DFC self-reported status.
[2] Includes Puerto Rico and Virgin Islands.
[3] Based on claims and CROWNWeb data through December 2013.

b. Effects of the PY 2018 ESRD QIP

The methodology that we are proposing to use to determine a facility's TPS for the PY 2018 ESRD QIP is described in sections III.F.6 and III.F.7 of this proposed rule. Any reductions in ESRD PPS payments as a result of a facility's performance under the PY 2018 ESRD QIP would apply to ESRD PPS payments made to the facility in CY 2018.

We estimate that, of the total number of dialysis facilities (including those not receiving a TPS), approximately 16 percent or 919 of the facilities would likely receive a payment reduction in PY 2018. Facilities that do not receive a TPS are not eligible for a payment reduction.

In conducting our impact assessment, we have assumed that there will be 5,996 dialysis facilities paid through the PPS. Table 42 shows the overall estimated distribution of payment reductions resulting from the PY 2018 ESRD QIP.

TABLE 42—ESTIMATED DISTRIBUTION OF PY 2018 ESRD QIP PAYMENT REDUCTIONS

Payment reduction (percent)	Number of facilities	Percent of facilities (percent)
0.0	4,989	84.4
0.5	729	12.3
1.0	132	2.2
1.5	35	0.6
2.0	23	0.4

Note: This table excludes 88 facilities that we estimate will not receive a payment reduction because they will not report enough data to receive a Total Performance Score.

To estimate whether or not a facility would receive a payment reduction in PY 2018, we scored each facility on achievement and improvement on several measures we have previously finalized and for which there were available data from CROWNWeb and Medicare claims. Measures used for the simulation are shown in Table 43.

TABLE 43-DATA USED TO ESTIMATE PY 2018 ESRD QIP PAYMENT REDUCTIONS

Measure	Period of time used to calculate achievement thresholds, performance standards, benchmarks, and improvement thresholds	Performance period
Vascular Access Type:		
% Fistula	Jan 2012–Dec 2012	Jan 2013–Dec 2013.
% Catheter	Jan 2012–Dec 2012	Jan 2013–Dec 2013.
Kt/V:		
Adult HD	Jan 2012–Dec 2012	Jan 2013–Dec 2013.
Adult PD	Jan 2012–Dec 2012	Jan 2013–Dec 2013.
Pediatric HD	Jan 2012–Dec 2012	Jan 2013–Dec 2013.
Pediatric PD	Jan 2012–Dec 2012	Jan 2013–Dec 2013.
Hypercalcemia	May 2012–Dec 2012	Jan 2013–Dec 2013.
SRR	Jan 2011–Dec 2011	Jan 2012–Dec 2012.
STrR	Jan 2011–Dec 2011	Jan 2012–Dec 2012

Clinical measure topic areas with less than 11 cases for a facility were not included in that facility's Total Performance Score. Each facility's Total Performance Score was compared to an estimated minimum Total Performance Score and an estimated payment reduction table that were consistent with the proposals outlined in Section III.G.9 of this proposed rule. Facility reporting measure scores were estimated using available data from CY 2013. Facilities were required to have a score on at least one clinical and one reporting measure in order to receive a Total Performance Score.

To estimate the total payment reductions in PY 2018 for each facility resulting from this proposed rule, we multiplied the total Medicare payments to the facility during the one year period between January 2013 and December 2013 by the facility's estimated payment reduction percentage expected under the ESRD QIP, yielding a total payment reduction amount for each facility: (Total ESRD payment in January 2013 through December 2013 times the estimated payment reduction percentage). For PY 2018, the total payment reduction for all of the 919 facilities expected to receive a reduction is approximately $7 million ($6,958,521). Further, we estimate that

the total costs associated with the collection of information requirements for PY 2018 described in Section VIII.1.b of this proposed rule would be approximately $248 thousand for all ESRD facilities. As a result, we estimate that ESRD facilities will experience an aggregate impact of approximately $7.2 million ($248,309 + $6,958,521 = $7,206,830) in PY 2018, as a result of the PY 2018 ESRD QIP.

Table 44 below shows the estimated impact of the finalized ESRD QIP payment reductions to all ESRD facilities for PY 2018. The table details the distribution of ESRD facilities by facility size (both among facilities considered to be small entities and by number of treatments per facility), geography (both urban/rural and by region), and by facility type (hospital based/freestanding facilities). Given that the time periods used for these calculations will differ from those we propose to use for the PY 2018 ESRD QIP, the actual impact of the PY 2018 ESRD QIP may vary significantly from the values provided here.

TABLE 44—IMPACT OF PROPOSED QIP PAYMENT REDUCTIONS TO ESRD FACILITIES FOR PY 2018

	Number of facilities	*Number of treatments 2013 (in millions)*	*Number of facilities with QIP score*	*Number of facilities expected to receive a payment reduction*	*Payment reduction (percent change in total ESRD payments)*
All Facilities	5,996	39.1	5,908	919	−0.10
Facility Type:					
Freestanding	5,520	36.6	5,455	818	−0.09
Hospital-based	476	2.5	453	101	−0.17
Ownership Type:					
Large Dialysis	4,150	27.5	4,115	580	−0.08
Regional Chain	871	5.9	858	127	−0.10
Independent	582	3.6	561	123	−0.15
Hospital-based (non-chain):	393	2.1	374	89	−0.19
Facility Size:.					
Large Entities	5,021	33.5	4,973	707	−0.08
Small Entities [1]	975	5.7	935	212	−0.16
Rural Status:					
(1) Yes	1,212	5.9	1,190	139	−0.07
(2) No	4,784	33.3	4,718	780	−0.10
Census Region:					
Northeast	792	5.8	784	111	−0.08
Midwest	1,341	7.7	1,318	226	−0.10
South	2,527	17.5	2,517	337	−0.07
West	1,015	7.1	1,008	109	−0.06
US Territories [2]	321	1.0	281	136	−0.43
Census Division:					
East North Central	979	5.8	952	202	−0.13
East South Central	497	2.9	493	67	−0.09
Middle Atlantic	661	4.8	650	106	−0.10
Mountain	352	1.9	349	43	−0.08
New England	177	1.3	172	21	−0.09
Pacific	710	5.4	703	90	−0.08
South Atlantic	1,333	9.1	1,315	232	−0.10
West North Central	438	2.0	426	53	−0.07
West South Central	807	5.6	806	90	−0.07
US Territories [2]	42	0.3	42	15	−0.25
Facility Size (# of total treatments):					
Less than 4,000 treatments	1,086	2.7	1,032	215	−0.16
4,000–9,999 treatments	2,226	10.5	2,225	277	−0.07
Over 10,000 treatments	2,523	25.7	2,523	352	−0.07
Unknown	161	0.3	128	75	−0.59

[1] Small Entities include hospital-based and satellite facilities and non-chain facilities based on DFC self-reported status.
[2] Includes Puerto Rico and Virgin Islands.
[3] Based on claims and CROWNWeb data through December 2013.

3. DMEPOS Provisions

a. Effects of the Proposed Methodology for Adjusting DMEPOS Payment Amounts Using Information From Competitive Bidding Programs

We estimate that the proposed methodology for adjusting DMEPOS payment amounts using information from DMEPOS CBPs would save over $7 billion over FY 2016 through 2020. The savings would be primarily achieved from price reductions for items. Therefore, most of the economic impact is expected from the reduced prices. We estimate that approximately half of the DMEPOS items and services furnished to Medicare beneficiaries are furnished to beneficiaries residing outside existing CBAs. (See Table 45.)

TABLE 45—IMPACT OF PRICING ITEMS IN NON-COMPETITIVE AREAS USING COMPETITIVE BIDDING PRICING

FY	Impact on the federal government in dollars (to the nearer ten million)	Impact on beneficiary cost sharing in dollars (to the nearer ten million)
2016	−880	−270
2017	−1,430	−470
2018	−1,520	−510
2019	−1,630	−540
2020	−1,750	−580

Although these transfers create incentives that very likely cause changes in the way society uses its resources, we lack data with which to estimate the resulting social costs or benefits.

b. Effects of the Proposed Special Payment Methodologies and Payment Rules for Durable Medical Equipment and Enteral Nutrition Furnished Under the Competitive Bidding Program

We believe that the proposed special payment rules would not have a significant impact on beneficiaries and suppliers. Contract suppliers are responsible for furnishing items and services needed by the beneficiary, and the cost to suppliers for furnishing these items and services does not change based on whether or not the equipment and related items and services are paid for separately under a capped rental payment method. Because the supplier's bids would reflect the cost of furnishing items in accordance with the new payment rules, we expect the overall savings would be generally the same as they are under the current payment rules. Furthermore, as indicated above, we are proposing that the alterative payment rules would be phased in under a limited number of areas first to determine impact on the program, beneficiaries, and suppliers. If supported by evaluation results, a decision to expand the proposed special payment rules to other areas would be addressed in future rulemaking.

c. Effects of the Proposed Clarification of the Scope of the Medicare Hearing Aid Coverage Exclusion

This proposed rule proposes to clarify the scope of the Medicare coverage exclusion for hearing aids and proposes to no longer cover BAHAs. However, if finalized, this proposed rule would have no significant fiscal impact on the Medicare program, because Medicare program expenditures for BAHAs during the period CY2005 through CY 2013 have been insignificant. This proposed clarification would provide clear guidance about coverage of DME with regard to the statutory hearing aid exclusion. The proposed regulation, if finalized, would explicitly except cochlear implants and brain stem implants from the hearing aid exclusion, and therefore, Medicare coverage for these devices would continue.

We estimate that the proposed clarification of the scope of the Medicare hearing coverage exclusion would save Medicare approximately $80 million dollars over five years beginning in January 1, 2015 through September 30, 2019. The savings would be primarily achieved from removing coverage of the BAHA device. (See Table 46.)

TABLE 46—CLARIFICATION OF THE STATUTORY MEDICARE HEARING AID COVERAGE EXCLUSION

FY	Impact to the Federal Government (rounded to the nearer $10 millions)
2015	−10
2016	−10
2017	−20
2018	−20
2019	−20

d. Effects of the Proposed Definition of Minimal Self-Adjustment of Orthotics Under Competitive Bidding

The proposed rule would modify the definition of minimal self-adjustment to indicate that it means an adjustment that the beneficiary, caretaker for the beneficiary, or supplier of the device can perform and does not require the services of a certified orthotist (that is, an individual certified by either the American Board for Certification in Orthotics and Prosthetics, Inc., or the Board for Orthotist/Prosthetist Certification) or a physician as defined in section 1861(r) of the Act, a treating practitioner means a physician assistant, nurse practitioner, or clinical nurse specialist as defined in section 1861(aa)(5) of the Act, an occupational therapist as defined in 42 CFR 484.4, or physical therapist as defined in 42 CFR 484.4 in compliance with all applicable Federal and State licensure and regulatory requirements. We estimate that the proposed clarification of the definition of minimal self-adjustment would have no significant impact on program expenditures or access to orthotics. This proposed clarification would impact suppliers furnishing custom fitted orthotics that do not have the expertise necessary to make more than minimal adjustments to an orthotic that a beneficiary or caregiver could be trained to make.

e. Effects of the Proposed Revision to Change of Ownership Rules To Allow Contract Suppliers To Sell Specific Lines of Business

This rule would clarify the change of ownership rules so as to not interfere with the normal course of business for DME suppliers. This rule would establish an exception under the CHOW rules to allow transfer of part of a competitive bidding contract when a contract supplier sells a distinct line of business to a qualified successor entity r under certain specific circumstances. This clarification would impact businesses in a positive way by allowing them to conduct everyday transactions without interference from our rules and regulations.

C. Accounting Statement

As required by OMB Circular A–4 (available at *http://www.whitehouse.gov/omb/circulars_a004_a-4*), in Table 47 below, we have prepared an accounting statement showing the classification of the transfers and costs associated with the various provisions of this proposed rule.

TABLE 47—ACCOUNTING STATEMENT: CLASSIFICATION OF ESTIMATED TRANSFERS AND COSTS/SAVINGS

Category	Transfers
ESRD PPS for CY 2015	
Annualized Monetized Transfers	$ 30 million.
From Whom to Whom	Federal government to ESRD providers.
Increased Beneficiary Co-insurance Payments	$10 million.
From Whom to Whom	Beneficiaries to ESRD providers.
ESRD QIP for PY 2017	
Annualized Monetized Transfers	−$11.9 million.
From Whom to Whom	Federal government to ESRD providers.
Category	**Costs**
Annualized Monetized ESRD Provider Costs	$27 thousand.
ESRD QIP for PY 2018	
Annualized Monetized Transfers	−$7 million.
From Whom to Whom	Federal government to ESRD providers.
Annualized Monetized ESRD Provider Costs	$248 thousand.

Pricing Items in Non-competitive Areas Using Competitive Bidding Pricing

Category	Transfer			
Annualized monetized transfer on beneficiary cost sharing	Estimates	Year dollar	Discount rate (percent)	Period covered
	−$464.5 million	2014	7	2016–2020
	−$469.9 million	2014	3	2016–2020
From Whom to Whom	Beneficiaries to Medicare providers.			
	Transfers			
Annualized monetized transfer payments	Estimates	Year dollar	Discount rate (percent)	Period covered
	−$1,415.4 million	2014	7	2016–2020
	−$1,430.5 million	2014	3	2016–2020
From Whom to Whom	Federal government to Medicare providers.			

Clarification of the Statutory Medicare Hearing Aid Coverage Exclusion

Category	Transfers			
Annualized monetized transfer payments	Estimates	Year dollar	Discount rate (percent)	Period covered
	−$15.6 million	2014	7	2015–2019
	−$15.8 million	2014	3	2015–2019
From Whom to Whom	Federal government to Medicare providers.			

XVI. Regulatory Flexibility Act Analysis

The Regulatory Flexibility Act (September 19, 1980, Pub. L. 96–354) (RFA) requires agencies to analyze options for regulatory relief of small entities, if a rule has a significant impact on a substantial number of small entities. For purposes of the RFA, small entities include small businesses, nonprofit organizations, and small governmental jurisdictions. Approximately 16 percent of ESRD dialysis facilities are considered small entities according to the Small Business Administration's (SBA) size standards, which classifies small businesses as those dialysis facilities having total revenues of less than $35.5 million in any 1 year. Individuals and States are not included in the definitions of a small entity. For more information on SBA's size standards, see the Small Business Administration's Web site at *http://www.sba.gov/content/small-business-size-standards* (Kidney Dialysis Centers are listed as 621492 with a size standard of $35.5 million).

We do not believe ESRD facilities are operated by small government entities such as counties or towns with populations of 50,000 or less, and therefore, they are not enumerated or included in this estimated RFA analysis. Individuals and States are not included in the definition of a small entity.

For purposes of the RFA, we estimate that approximately 16 percent of ESRD facilities are small entities as that term is used in the RFA (which includes

small businesses, nonprofit organizations, and small governmental jurisdictions). This amount is based on the number of ESRD facilities shown in the ownership category in Table 38. Using the definitions in this ownership category, we consider the 582 facilities that are independent and the 393 facilities that are shown as hospital-based to be small entities. The ESRD facilities that are owned and operated by LDOs and regional chains would have total revenues of more than $35.5 million in any year when the total revenues for all locations are combined for each business (individual LDO or regional chain), and are not, therefore, included as small entities.

For the ESRD PPS updates proposed in this rule, a hospital-based ESRD facility (as defined by ownership type) is estimated to receive a 0.4 percent increase in payments for CY 2015. An independent facility (as defined by ownership type) is also estimated to receive a 0.4 percent increase in payments for CY 2015.

We estimate that of the 1,217 ESRD facilities expected to receive a payment reduction in the PY 2017 ESRD QIP, 275 of those facilities would be ESRD small entity facilities. We present these findings in Table 39 (''Estimated Distribution of PY 2017 ESRD QIP Payment Reductions'') and Table 41 (''Impact of Proposed QIP Payment Reductions to ESRD Facilities for PY 2017'') above. We estimate that the payment reductions will average approximately $9,353 per facility across the 1,217 facilities receiving a payment reduction, and $8,698 for each small entity facility. Using our estimates of facility performance, we also estimated the impact of payment reductions on ESRD small entity facilities by comparing the total payment reductions for the 275 small entity facilities with the aggregate ESRD payments to all small facilities. We estimate that there are a total of 885 small facilities, and that the aggregate ESRD PPS payments to these facilities would decrease 0.23 percent in PY 2017.

We estimate that of the 1,320 ESRD facilities expected to receive a payment reduction in the PY 2018 ESRD QIP, 282 are ESRD small entity facilities. We present these findings in Table 39 (''Estimated Distribution of PY 2018 ESRD QIP Payment Reductions'') and Table 41 (''Impact of Proposed QIP Payment Reductions to ESRD Facilities for PY 2018'') above. We estimate that the payment reductions will average approximately $7,119 per facility across the 895 facilities receiving a payment reduction, and $6,294 for each small entity facility. Using our estimates of facility performance, we also estimated the impact of payment reductions on ESRD small entity facilities by comparing the total estimated payment reductions for 209 small entity facilities with the aggregate ESRD payments to all small entity facilities. We estimate that there are a total of 975 small entity facilities, and that the aggregate ESRD PPS payments to these facilities would decrease 0.16 percent in PY 2018.

We expect that the proposed methodology for adjusting DMEPOS payment amounts using information from DMEPOS CBPs would have a significant impact on a substantial number of small suppliers. Although suppliers furnishing items and services outside CBAs do not have to compete and be awarded contracts in order to continue furnishing these items and services, the payment amounts for these items and services would be reduced using the methodology established as a result of the proposed rule. The statute requires that the methodology for adjusting payment amounts take into consideration the costs of furnishing items and services in areas where the adjustments will occur and these considerations are discussed in the preamble (refer to section IV(A)(5) of the preamble). The proposed methodology for making payment adjustments would allow for adjustments based on bids in different geographic regions to reflect regional variation in costs of furnishing items and services and the national floor for adjustments in states with unique costs. We believe that suppliers would be able to continue furnishing items and services to beneficiaries in areas outside the CBAs after the reductions in the payment amounts are applied without a significant change in the rate at which they accept assignment of Medicare claims for these items and services. Because section 1834(a)(1)(F)(ii) of the Act mandates that payment amounts for DME subject to competitive bidding be adjusted in areas where CBPs are not implemented, the only alternative we can consider other than paying based on adjusted fee schedule amounts is to implement CBPs in all areas. However, this approach would have an even greater impact on small suppliers.

We expect the proposed special payment rules for DME and enteral nutrition would not have a significant impact on small suppliers. We believe that these rules would benefit affected suppliers since payment for rental of DME and enteral nutrition infusion pumps would no longer be capped and suppliers would retain ownership to the equipment.

We expect that the proposal to modify the definition of minimal self-adjustment of orthotics would not have a significant impact on small suppliers. According to the Medicare Pricing, Data Analysis and Coding (PDAC) Contractor from FY 2010 through FY 2013 there were approximately 6,000 DMEPOS suppliers with a provider transaction access number (PTAN) registered with the National Supplier Clearinghouse to supply orthotics. In addition, there are a limited number of applicable HCPCS codes (approximately 77) that require a skilled individual's expertise. We believe that the majority of businesses providing orthotics already employ a ''skilled individual.'' However, for those few businesses that do not already have a skilled individual providing custom fitted orthotics they could comply with the proposed changes to the definition and requirements by hiring a skilled individual. For example, according to the Bureau of Labor Statistics Occupational Employment Statistics May 2013 the median pay for a certified orthotist was $30.27 an hour. The impact will vary according to the caseload of custom fitted orthotics provided by an individual supplier.

We expect that although the proposal which clarifies the scope of the Medicare statutory exclusion for hearing aids would withdraw the coverage for BAHAs, it would not have a significant impact on small suppliers since the volume of allowed services for bone anchored hearing aids covered by Medicare is very small (less than 2,000 nationwide) and would not account for a large percentage of any individual supplier's total revenue.

We expect that the proposed revisions to CHOW rules to allow contract suppliers to sell specific lines of business provision would have a positive impact on suppliers and no significant negative impact on small suppliers.

Therefore, the Secretary has determined that this proposed rule would have a significant economic impact on a substantial number of small entities. We solicit comment on the RFA analysis provided.

In addition, section 1102(b) of the Act requires us to prepare a regulatory impact analysis if a rule may have a significant impact on the operations of a substantial number of small rural hospitals. Any such regulatory impact analysis must conform to the provisions of section 603 of the RFA. For purposes of section 1102(b) of the Act, we define a small rural hospital as a hospital that is located outside of a metropolitan statistical area and has fewer than 100 beds. We do not believe this proposed rule will have a significant impact on operations of a substantial number of

small rural hospitals because most dialysis facilities are freestanding. While there are 145 rural hospital-based dialysis facilities, we do not know how many of them are based at hospitals with fewer than 100 beds. However, overall, the 145 rural hospital-based dialysis facilities will experience an estimated 0.1 percent decrease in payments. As a result, this proposed rule is not estimated to have a significant impact on small rural hospitals. Therefore, the Secretary has determined that this proposed rule will not have a significant impact on the operations of a substantial number of small rural hospitals.

XVII. Unfunded Mandates Reform Act Analysis

Section 202 of the Unfunded Mandates Reform Act of 1995 (UMRA) (Pub. L. 104–4) also requires that agencies assess anticipated costs and benefits before issuing any rule whose mandates require spending in any 1 year $100 million in 1995 dollars, updated annually for inflation. In 2013, that threshold is approximately $141 million. This proposed rule does not include any mandates that would impose spending costs on State, local, or Tribal governments in the aggregate, or by the private sector, of $141 million.

XVIII. Federalism Analysis

Executive Order 13132 on Federalism (August 4, 1999) establishes certain requirements that an agency must meet when it promulgates a proposed rule (and subsequent final rule) that imposes substantial direct requirement costs on State and local governments, preempts State law, or otherwise has Federalism implications. We have reviewed this proposed rule under the threshold criteria of Executive Order 13132, Federalism, and have determined that it will not have substantial direct effects on the rights, roles, and responsibilities of States, local or Tribal governments.

XXI. Congressional Review Act

This proposed rule is subject to the Congressional Review Act provisions of the Small Business Regulatory Enforcement Fairness Act of 1996 (5 U.S.C. 801 et seq.) and has been transmitted to the Congress and the Comptroller General for review.

In accordance with the provisions of Executive Order 12866, this proposed rule was reviewed by the Office of Management and Budget.

XX. Files Available to the Public via the Internet

The Addenda for the annual ESRD PPS proposed and final rulemakings will no longer appear in the **Federal Register**. Instead, the Addenda will be available only through the Internet and is posted on the CMS Web site at *http://www.cms.gov/ESRDPayment/PAY/list.asp.* In addition to the Addenda, limited data set (LDS) files are available for purchase at *http://www.cms.gov/Research-Statistics-Data-and-Systems/Files-for-Order/LimitedDataSets/EndStageRenalDiseaseSystemFile.html.* Readers who experience any problems accessing the Addenda or LDS files should contact Stephanie Frilling at (410) 786–4507.

List of Subjects

42 CFR Part 405

Administrative practice and procedure, Health facilities, Health professions, Kidney diseases, Medical devices, Medicare, Reporting and recordkeeping requirements, Rural areas, and X-rays

42 CFR Part 411

Kidney diseases, Medicare, Physician Referral, and Reporting and recordkeeping requirements

42 CFR Part 413

Health facilities, Kidney diseases, Medicare, Reporting and recordkeeping requirements.

42 CFR Part 414

Administrative practice and procedure, Health facilities, Health professions, Kidney diseases, Medicare, and Reporting and recordkeeping requirements.

For the reasons set forth in the preamble, the Centers for Medicare & Medicaid Services proposes to amend 42 CFR chapter IV as follows:

PART 405—FEDERAL HEALTH INSURANCE FOR THE AGED AND DISABLED

■ 1. The authority for part 405 continues to read as follows:

Authority: Secs. 205(a), 1102, 1861, 1862(a), 1869, 1871, 1874, 1881, and 1886(k) of the Social Security Act (42 U.S.C. 405(a), 1302, 1395x, 1395y(a), 1395ff, 1395hh, 1395kk, 1395rr and 1395ww(k)), and sec. 353 of the Public Health Service Act (42 U.S.C. 263a).

§ 405.2102 [Amended]

■ 2. Section 405.2102 is amended by removing all the definitions, with the exception of two definitions, ''Network, ESRD'', and ''Network organization''.

PART 411—EXCLUSIONS FROM MEDICARE AND LIMITATIONS ON MEDICARE PAYMENT

■ 3. The authority citation for part 411 continues to read as follows:

Authority: Secs. 1102, 1860D–1 through 1860D–42, 1871, and 1877 of the Social Security Act (42 U.S.C. 1302, 1395w–101 through 1395w–152, 1395hh, and 1395nn).

■ 4. Section 411.15 is amended by revising paragraph (d) to read as follows:

§ 411.15 Particular services excluded from coverage.

* * * * *

(d) *Hearing aids* or examinations for the purpose of prescribing, fitting, or changing hearing aids.

(1) *Scope.* The scope of the hearing aid exclusion encompasses all types of air conduction and bone conduction hearing aids (external, internal, or implanted).

(2) *Devices not subject to the hearing aid exclusion.* Cochlear implants and auditory brainstem implants that replace the function of cochlear structures or auditory nerve and provide electrical energy to auditory nerve fibers and other neural tissue via implanted electrode arrays. These devices produce the perception of sound and do not meet the definition of hearing aid.

* * * * *

PART 413—PRINCIPLES OF REASONABLE COST REIMBURSEMENT; PAYMENT FOR END–STAGE RENAL DISEASE SERVICES; OPTIONAL PROSPECTIVELY DETERMINED PAYMENT RATES FOR SKILLED NURSING FACILITIES

■ 5. The authority citation for part 413 is revised to read as follows:

Authority: Secs. 1102, 1812(d), 1814(b), 1815, 1833(a), (i), and (n), 1861(v), 1871, 1881, 1883 and 1886 of the Social Security Act (42 U.S.C. 1302, 1395d(d), 1395f(b), 1395g, 1395l(a), (i), and (n), 1395x(v), 1395hh, 1395rr, 1395tt, and 1395ww); and sec. 124 of Pub. L. 106–113 (113 Stat. 1501A–332), sec. 3201 of Pub. L. 112–96 (126 Stat. 156), sec. 632 of Pub. L. 112–240 (126 Stat. 2354), and sec. 217 of Pub. L. 113–93.

§ 413.174 [Amended]

■ 6. In § 413.174, paragraph (f)(6) is amended by removing ''January 1, 2016'' and by adding in its place ''January 1, 2024.''

■ 7. Section 413.232 is amended revising paragraphs (b) introductory text and (f) and adding paragraph (h) to read as follows:

§ 413.232 Low-volume adjustment.

* * * * *

(b) Definition of low-volume facility. A low-volume facility is an ESRD facility that, as determined based on the documentation submitted pursuant to paragraph (h) of this section:

* * * * *

(f) Except as provided in paragraph (g) of this section, to receive the low-volume adjustment an ESRD facility must provide an attestation statement, by November 1st of each year preceding the payment year, to its Medicare Administrative Contractor that the facility meets all the criteria established in this section. For calendar year 2012, the attestation must be provided by January 3, 2012. For calendar year 2015, the attestation must be provided by December 31, 2014.

* * * * *

(h) To receive the low-volume adjustment, an ESRD facility must include in their attestation provided pursuant to paragraph (f) of this section a statement that the ESRD facility meets the definition of a low-volume facility in paragraph (b) of this section. To determine eligibility for the low-volume adjustment, the Medicare Administrative Contractor (MAC) on behalf of CMS relies upon as filed or final settled 12-consecutive month cost reports for the 3 cost reporting years preceding the payment year to verify the number of treatments, except that:

(1) In the case of a hospital-based ESRD facility as defined in § 413.174(c), the MAC relies upon the attestation submitted pursuant to paragraph (f) of this section and may consider other supporting data in addition to the total treatments reported in each of the 12-consecutive month cost reports for the 3 cost reporting years preceding the payment year to verify the number of treatments that were furnished by the individual hospital-based ESRD facility seeking the adjustment; and

(2) In the case of an ESRD facility that has undergone a change of ownership that does not result in a new Provider Transaction Access Number for the ESRD facility, the MAC relies upon the attestation and when the change of ownership results in two non-standard cost reporting periods (less than or greater than 12-consecutive months), does one or both of the following for the 3 cost reporting years preceding the payment year to verify the number of treatments:

(i) Combines the two non-standard cost reporting periods of less than 12 months to equal a full 12-consecutive month period; and/or

(ii) Combines the two non-standard cost reporting periods that in combination may exceed 12-consecutive months and prorates the data to equal a full 12-consecutive month period.

§ 413.237 [Amended]

■ 8. In § 413.237, paragraph (a)(1)(iv) is amended by removing ''January 1, 2016'' and adding in its place ''January 1, 2024.''

PART 414—PAYMENT FOR PART B MEDICAL AND OTHER HEALTH SERVICES

■ 9. The authority citation for part 414 continues to read as follows:

Authority: Secs. 1102, 1871, and 1881(b)(l) of the Social Security Act (42 U.S.C. 1302, 1395hh, and 1395rr(b)(l)).

■ 10. Section 414.105 is added to read as follows:

§ 414.105 Application of Competitive Bidding Information and Limitation of Inherent Reasonableness Authority

(a) For enteral nutrients, equipment and supplies furnished on or after January 1, 2011, the fee schedule amounts may be adjusted based on information on the payment determined as part of implementation of the programs under subpart F using the methodologies set forth at § 414.210(g).

(b) In the case of such adjustments, the rules at § 405.502(g) and (h) of this chapter shall not be applied.

Subpart D—Payment for Durable Medical Equipment and Prosthetic and Orthotic Devices

■ 11. The heading for subpart D is revised to read as set forth above.

■ 12. Section 414.202 is amended by:

■ A. Adding the definition of ''Frontier state''.

■ B. Revising the definition of ''Region''.

■ C. Adding the definition of ''Rural State''.

The additions and revision read as follows:

§ 414.202 Definitions.

* * * * *

Frontier state means a state where at least 50 percent of counties in the state have a population density of 6 people or less per square mile.

* * * * *

Region means, for the purpose of implementing § 414.210(g), geographic areas defined by the Bureau of Economic Analysis in the United States Department of Commerce for economic analysis purposes, and, for the purpose of implementing § 414.228, those contractor service areas administered by CMS regional offices.

Rural State means a state where more than 50 percent of the population is rural as determined through census data.

■ 13. Section 414.210 is amended by revising paragraph (a) and adding paragraph (g) to read as follows:

§ 414.210 General payment rules.

(a) *General rule.* For items furnished on or after January 1, 1989, except as provided in paragraphs (c), (d), and (g) of this section, Medicare pays for durable medical equipment, prosthetics and orthotics, including a separate payment for maintenance and servicing of the items as described in paragraph (e) of this section, on the basis of 80 percent of the lesser of—

(1) The actual charge for the item;

(2) The fee schedule amount for the item, as determined in accordance with the provisions of §§ 414.220 through 414.232

* * * * *

(g) *Application of Competitive Bidding Information and Limitation of Inherent Reasonableness Authority.* For items furnished on or after January 1, 2011, the fee schedule amounts may be adjusted based on information on the payment determined as part of implementation of the programs under subpart F, of this part, excluding information on the payment determined in accordance with the special payment rules at § 414.409. In the case of such adjustments, the rules at § 405.502(g) and (h) of this chapter shall not be applied

(1) *Payment adjustments for areas within the contiguous United States using information from competitive bidding programs.* For an item or service subject to the programs under subpart F, that payment amount for such item or services for areas within the contiguous United States shall be established as follows:

(i) CMS determines a regional price for each state in the contiguous United States and the District of Columbia equal to the un-weighted average of the single payment amount for an item or service established in accordance with § 414.416 for competitive bidding areas that are fully or partially located in the same region where the state or District of Columbia is located.

(ii) CMS determines a national average price equal to the average of the regional prices determined under paragraph (g)(1)(i) of this section.

(iii) A regional price determined under paragraph (g)(1)(i) of this section cannot be greater than 110 percent of the national average price determined under paragraph (g)(1)(ii) of this section nor less than 90 percent of the national average price determined under paragraph (g)(1)(ii) of this section. In addition, a regional price determined under paragraph (g)(1)(i) of this section

for a state designated as a rural or frontier state cannot be less than 110 percent of the national average price determined under paragraph (g)(1)(ii) of this section.

(2) *Payment adjustments for areas outside the contiguous United States using information from competitive bidding programs.* For an item or service subject to the programs under subpart F, the fee schedule amounts for areas outside the contiguous United States are adjusted based on the greater of—

(i) The average of the single payment amounts for the item or service for CBAs outside the contiguous United States.

(ii) 110 percent of the national average price for the item or service determined under paragraph (g)(1)(ii) of this section.

(3) *Payment adjustments for items and services included in no more than ten competitive bidding programs.* Notwithstanding paragraph (g)(1) of this section, for an item or service that is included in ten or fewer competitive bidding programs as defined at § 414.402, the fee schedule amounts applied for all areas within and outside the contiguous United States are adjusted based on 110 percent of the un-weighted average of the single payment amounts for the item or service.

(4) *Payment adjustments using data on items and services included in competitive bidding programs no longer in effect.* In the case where adjustments to fee schedule amounts are made using any of the methodologies described, if the adjustments are based solely on single payment amounts from competitive bidding programs that are no longer in effect, the adjusted fee schedule amounts shall be increased on an annual basis using the percentage change in the Consumer Price Index for all Urban Consumers (CPI–U) from the mid-point of the last year the single payment amounts were in effect to the month ending 6 months prior to the date the initial payment adjustments would go into effect. Following the initial adjustment to the fee schedule amounts, the adjusted fee schedule amounts would continue to be updated every 12 months using the percentage change in the CPI–U for the 12-month period ending 6 months prior to the date the updated payment adjustments would go into effect.

(5) *Adjusted payment amounts for accessories used with different types of base equipment.* In situations where a HCPCS code that describes an item used with different types of base equipment is included in more than one product category in a CBA under competitive bidding, a weighted average of the single payment amounts for the code is computed for each CBA, weighted based on national allowed services for the code when used with different equipment. The weighted average single payment amount per code per CBA would then be used in applying the payment adjustment methodologies proposed in this section.

(6) *Payment adjustments consistent with items and services furnished.* In the case where payment amounts are established under subpart F of this part for an item or service that are greater than the payment amounts established under subpart F of this part for a higher level item or service (i.e., one with additional features or functionality), the payment amounts for the lower level of service are adjusted so that they are no greater than the payment amounts for the higher level of service before making payment adjustments using any of the methodologies above.

(7) *Payment adjustments for mail order items furnished in the Northern Mariana Islands.* The fee schedule amounts for mail order items furnished to beneficiaries in the Northern Mariana Islands are adjusted so that they are equal to 100 percent of the single payment amounts established under a national mail order competitive bidding program.

(8) *Updating adjusted fee schedule amounts.* The adjusted fee schedule amounts are revised each time a single payment amount for an item or service is updated following one or more new competitions and as other items are added to programs established under subpart F of this part.

■ 14. Section 414.402 is amended by revising the definition of ''Minimal self-adjustment'' to read as follows:

§ 414.402 Definitions.

* * * * *

Minimal self-adjustment means an adjustment the beneficiary, caretaker for the beneficiary, or supplier of the device can perform and does not require the services of a certified orthotist (that is, an individual certified by either the American Board for Certification in Orthotics and Prosthetics, Inc., or the Board for Orthotist/Prosthetist Certification), or a physician as defined in 1861(r) of the Act, a treating practitioner which means a physician assistant, nurse practitioner, or clinical nurse specialist as defined in section 1861(aa)(5) of the Act, an occupational therapist as defined in § 484.4 of this chapter, or physical therapist as defined in § 484.4 of this chapter who are in compliance with all applicable Federal and State licensure and regulatory requirements.

* * * * *

■ 15. Section 414.408 is amended by adding paragraph (l) to read as follows:

§ 414.408 Payment rules.

* * * * *

(l) *Exceptions for certain items and services paid in accordance with special payment rules.* The payment rules in paragraphs (f) thru (i), (j)(2), (j)(3), (j)(7), and (k) of this section do not apply to items and services paid in accordance with the special payment rules at § 414.409.

■ 16. Section 414.409 is added to read as follows:

§ 414.409 Special payment rules.

(a) *Payment on a bundled, continuous rental basis.* (1) In no more than 12 CBAs, in conjunction with competitions that begin on or after January 1, 2015, payment is made on a bundled, continuous monthly rental basis for enteral nutrients, supplies and equipment, oxygen and oxygen equipment, standard manual wheelchairs, standard power wheelchairs, CPAP and respiratory assist devices, and hospital beds. The CBAs and competitions where these payment rules apply are announced in advance of each competition, with the payment rules in this section used in lieu of the payment rules at § 414.408(f) thru (i), (j)(2), (j)(3), (j)(7), and (k). The single payment amounts are established based on bids submitted and accepted for furnishing rented DME and enteral nutrition on a monthly basis for each month of medical need during the contract period monthly single payment amount would include payment for all nutrients, supplies and equipment.

(2) Payment is made on a continuous monthly rental basis for DME. The single payment amount for the monthly rental of DME includes payment for the rented equipment, maintenance and servicing of the rented equipment, and replacement of supplies and accessories necessary for the effective use of the rented equipment. Separate payment for replacement of equipment, repair or maintenance and servicing of equipment, or for replacement of accessories and supplies necessary for the effective use of equipment is not allowed under any circumstances.

(3) Payment is made on a monthly basis for enteral nutrition. The single payment amount includes payment for all nutrients, supplies and equipment. Separate payment for replacement of equipment, repair or maintenance and servicing of equipment, or for replacement of accessories and supplies necessary for the effective use of equipment is not allowed under any circumstances.

(b) *Payment for grandfathered DME items paid on a bundled, continuous rental basis.* Payment to a supplier that elects to be a grandfathered supplier of DME furnished in CBPs where these special payment rules apply is made in accordance with § 414.408(a)(1).

(c) *Supplier transitions for DME and enteral nutrition paid on a bundled, continuous rental basis.* Changes from a non-contract supplier to a contract supplier at the beginning of a CBP where payment is made on a bundled, continuous monthly rental basis results in the contract supplier taking on responsibility for meeting all of the monthly needs for furnishing the covered DME or enteral nutrition. In the event that a beneficiary relocates from a CBA where these special payment rules apply to an area where rental cap rules apply, a new period of continuous use begins for the capped rental item, enteral nutrition equipment, or oxygen equipment as long as the item is determined to be medically necessary.

(d) *Responsibility for repair and maintenance and servicing of power wheelchairs.* In no more than 12 CBAs where payment for power wheelchairs is made on a capped rental basis, for power wheelchairs furnished in conjunction with competitions that begin on or after January 1, 2015, contract suppliers that furnish power wheelchairs under contracts awarded based on these competitions shall continue to repair power wheelchairs they furnish following transfer of title to the equipment to the beneficiary. The responsibility of the contract supplier to repair, maintain and service beneficiary-owned power wheelchairs does not apply to power wheelchairs that the contract supplier did not furnish to the beneficiary. For power wheelchairs that the contract supplier furnishes during the contract period, the responsibility of the contract supplier to repair, maintain and service the power wheelchair once it is owned by the beneficiary continues until the reasonable useful lifetime of the equipment expires, coverage for the power wheelchair ends, or the beneficiary relocates outside the CBA where the item was furnished. The contract supplier may not charge the beneficiary or the program for any necessary repairs or maintenance and servicing of a beneficiary-owned power wheelchair it furnished during the contract period.

■ 17. Section 414.412 is amended by revising paragraph (b)(2) and adding paragraphs (b)(3) through (5) to read as follows:

§ 414.412 Submission of bids under a competitive bidding program.

* * * * *

(b) * * *

(2) The bids submitted for each item or drug in a product category cannot exceed the payment amount that would otherwise apply to the item under Subpart C, Subpart D, or Subpart I of this part.

(3) The bids submitted for enteral nutrition, oxygen and oxygen equipment, standard manual wheelchairs, standard power wheelchairs, and hospital beds paid in accordance with the special payment rules at § 414.409(a) cannot exceed the average monthly payment for the bundle of items and services that would otherwise apply to the item under subpart C or subpart D of this part.

(4) The bids submitted for continuous positive airway pressure (CPAP) devices and respiratory assist devices paid in accordance with the special payment rules at § 414.409(a) cannot exceed the 1993 fee schedule amounts for these items, increased by the covered item update factors provided for these items in section 1834(a)(14) of the Act.

(5) Suppliers shall take into consideration the special payment rules at § 414.409(d) when submitting bids for furnishing power wheelchairs under competitions where these rules apply.

* * * * *

■ 18. Section 414.414 is amended by revising paragraph (f) to read as follows:

§ 414.414 Conditions for awarding contracts.

* * * * *

(f) *Expected savings.* A contract is not awarded under this subpart unless CMS determines that the amounts to be paid to contract suppliers for an item or drug under a competitive bidding program are expected to be less than the amounts that would otherwise be paid for the same item under subpart C or subpart D or the same drug under subpart I based on 95 percent of the average wholesale price in effect on October 1, 2003.

* * * * *

■ 19. Section 414.422 is amended by revising paragraph (d) to read as follows:

§ 414.422 Terms of contracts.

* * * * *

(d) *Change of ownership.* (1) A contract supplier must notify CMS if it is negotiating a change in ownership no later than 60 days before the anticipated date of the change.

(2) CMS may transfer a contract to an entity that merges with, or acquires, a contract supplier if the entity meets the following requirements:

(i) A successor entity—

(A) Meets all requirements applicable to contract suppliers for the applicable competitive bidding program;

(B) Submits to CMS the documentation described under § 414.414(b) through (d) if documentation has not previously been submitted by the successor entity or if the documentation is no longer sufficient for CMS to make a financial determination. A successor entity is not required to duplicate previously submitted information if the previously submitted information is not need to make a financial determination. This documentation must be submitted no later than 30 days prior to the anticipated effective date of the change of ownership; and

(C) Submits to CMS, at least 30 days before the anticipated effective date of the change of ownership, a signed novation agreement acceptable to CMS stating that it will assume all obligations under the contract; or

(ii) A new entity—

(A) Meets the requirements of (d)(2)(i)(A) and (B) of this section; and

(B) Contract supplier submits to CMS, at least 30 days before the anticipated effective date of the change of ownership, its final draft of a novation agreement as described in paragraph (d)(2)(iii) of this section for CMS review. The new entity submits to CMS, within 30 days after the effective date of the change of ownership, an executed novation agreement acceptable to CMS.

(3) Except as specified in paragraph (d)(4) of this section, CMS transfers the entire contract, including all product categories and competitive bidding areas, to a new entity.

(4) For contracts issued in the Round 2 Recompete and subsequent rounds in the case of a CHOW where a contract supplier sells a distinct company, (e.g., an affiliate, subsidiary, sole proprietor, corporation, or partnership) that furnishes a specific product category or services a specific CBA, CMS may transfer the portion of the contract performed by that company to a successor, if the following conditions are met:

(i) Every CBA, product category, and location of the company being sold must be transferred to the new qualified owner who meets all competitive bidding requirements; i.e. financial, accreditation and licensure;

(iii) All CBAs and product categories in the original contract that are not explicitly transferred by CMS remain unchanged in that original contract for the duration of the contract period unless transferred by CMS pursuant to a subsequent CHOW;

(iv) All requirements of paragraph (d)(2) of this section are met; and

(v) The sale of the distinct company includes all of the contract supplier's assets associated with the CBA and/or product category(s); and

(vi) CMS determines that transfer of part of the original contract will not result in disruption of service or harm to beneficiaries.

* * * * *

■ 20. Section 414.423 is amended by revising paragraphs (b)(1)(vi), (l)(2) introductory text, and (l)(2)(i) to read as follows:

§ 414.423 Appeals Process for Termination of Competitive Bidding Contract.

* * * * *

(b) * * *

(1) * * *

(vi) The effective date of termination is 45 days from the date of the notification letter unless a timely hearing request is filed or a corrective action plan (CAP) is submitted within 30 days of the date on the notification letter.

* * * * *

(l) * * *

(2) A contract supplier whose contract has been terminated must notify all beneficiaries who are receiving rented competitive bid items or competitive bid items received on a recurring basis, of the termination of their contract.

(i) The notice to the beneficiary from the supplier whose contract is terminated must be provided no later than 15 days prior to the effective date of termination.

* * * * *

(Catalog of Federal Domestic Assistance Program No. 93.773, Medicare—Hospital Insurance; and Program No. 93.774, Medicare—Supplementary Medical Insurance Program)

Dated: June 24, 2014.

Marilyn Tavenner,

Administrator, Centers for Medicare & Medicaid Services.

Approved: June 27, 2014.

Sylvia M. Burwell,

Secretary, Department of Health and Human Services.

[FR Doc. 2014–15840 Filed 7–2–14; 4:15 pm]

BILLING CODE 4120–01–P

FEDERAL REGISTER

Vol. 79 Friday,

No. 133 July 11, 2014

Part III

Department of Health and Human Services

Centers for Medicare & Medicaid Services

42 CFR Parts 403, 405, 410, et al.

Medicare Program; Revisions to Payment Policies Under the Physician Fee Schedule, Clinical Laboratory Fee Schedule, Access to Identifiable Data for the Center for Medicare and Medicaid Innovation Models & Other Revisions to Part B for CY 2015; Proposed Rule

DEPARTMENT OF HEALTH AND HUMAN SERVICES

Centers for Medicare & Medicaid Services

42 CFR Parts 403, 405, 410, 414, 425, and 498

[CMS–1612–P]

RIN 0938–AS12

Medicare Program; Revisions to Payment Policies Under the Physician Fee Schedule, Clinical Laboratory Fee Schedule, Access to Identifiable Data for the Center for Medicare and Medicaid Innovation Models & Other Revisions to Part B for CY 2015

AGENCY: Centers for Medicare & Medicaid Services (CMS), HHS.

ACTION: Proposed rule.

SUMMARY: This major proposed rule addresses changes to the physician fee schedule, and other Medicare Part B payment policies to ensure that our payment systems are updated to reflect changes in medical practice and the relative value of services, as well as changes in the statute. See the Table of Contents for a listing of the specific issues addressed in this proposed rule.

DATES: *Comment date:* To be assured consideration, comments must be received at one of the addresses provided below, no later than 5 p.m. on September 2, 2014.

ADDRESSES: In commenting, please refer to file code CMS–1612–P. Because of staff and resource limitations, we cannot accept comments by facsimile (FAX) transmission.

You may submit comments in one of four ways (please choose only one of the ways listed):

1. *Electronically.* You may submit electronic comments on this regulation to *www.regulations.gov*. Follow the instructions for ''submitting a comment.''

2. *By regular mail.* You may mail written comments to the following address ONLY: Centers for Medicare & Medicaid Services, Department of Health and Human Services, Attention: CMS–1612–P, P.O. Box 8013, Baltimore, MD 21244–8013.

Please allow sufficient time for mailed comments to be received before the close of the comment period.

3. *By express or overnight mail.* You may send written comments to the following address ONLY: Centers for Medicare & Medicaid Services, Department of Health and Human Services, Attention: CMS–1612–P, Mail Stop C4–26–05, 7500 Security Boulevard, Baltimore, MD 21244–1850.

4. *By hand or courier.* If you prefer, you may deliver (by hand or courier) your written comments before the close of the comment period to either of the following addresses:

a. For delivery in Washington, DC—
Centers for Medicare & Medicaid Services, Department of Health and Human Services, Room 445–G, Hubert H. Humphrey Building, 200 Independence Avenue SW., Washington, DC 20201

(Because access to the interior of the Hubert H. Humphrey Building is not readily available to persons without federal government identification, commenters are encouraged to leave their comments in the CMS drop slots located in the main lobby of the building. A stamp-in clock is available for persons wishing to retain a proof of filing by stamping in and retaining an extra copy of the comments being filed.)

b. For delivery in Baltimore, MD—
Centers for Medicare & Medicaid Services,
Department of Health and Human Services,
7500 Security Boulevard,
Baltimore, MD 21244–1850.

If you intend to deliver your comments to the Baltimore address, please call telephone number (410) 786–7195 in advance to schedule your arrival with one of our staff members.

Comments mailed to the addresses indicated as appropriate for hand or courier delivery may be delayed and received after the comment period.

FOR FURTHER INFORMATION CONTACT: Gail Addis, (410) 786–4552, for issues related to the refinement panel or for any physician payment issues not identified below.

Chava Sheffield, (410) 786–2298, for issues related to practice expense methodology, impacts, the sustainable growth rate, conscious sedation, or conversion factors.

Kathy Kersell, (410) 786–2033, for issues related to direct practice expense inputs.

Jessica Bruton, (410) 786–5991, for issues related to potentially misvalued services or work RVUs.

Craig Dobyski, (410) 786–4584, for issues related to geographic practice cost indices or malpractice RVUs.

Ken Marsalek, (410) 786–4502, for issues related to telehealth services.

Pam West, (410) 786–2302, for issues related to conditions for therapists in private practice.

Marianne Myers, (410) 786–5962, for issues related to ambulance extender provisions.

Amy Gruber, (410) 786–1542, for issues related to changes in geographic area designations for ambulance payment.

Anne Tayloe-Hauswald, (410) 786–4546, for issues related to clinical lab fee schedule.

Corinne Axelrod, (410) 786–5620, for issues related to Rural Health Clinics or Federally Qualified Health Centers.

Renee Mentnech, (410) 786–6692, for issues related to access to identifiable data for the Centers for Medicare & Medicaid models.

Marie Casey, (410) 786–7861, for issues related to local determination process for clinical diagnostic laboratory tests.

Frederick Grabau, (410) 786–0206, for issues related to private contracting/opt -out.

David Walczak, (410) 786–4475, for issues related to payment policy for substitute physician billing arrangements (locum tenens).

Melissa Heesters, (410) 786–0618, for issues related to reports of payments or other transfers of value to covered recipients.

Rashaan Byers, (410) 786–2305, for issues related to physician compare.

Christine Estella, (410) 786–0485, for issues related to the physician quality reporting system.

Alexandra Mugge (410) 786–4457, for issues related to EHR incentive program.

Patrice Holtz, (410) 786–5663, for issues related to comprehensive primary care initiative.

Terri Postma, (410) 786–4169, for issues related to Medicare Shared Savings Program.

Kimberly Spalding Bush, (410) 786–3232, for issues related to value-based modifier and improvements to physician feedback.

SUPPLEMENTARY INFORMATION:

Inspection of Public Comments: All comments received before the close of the comment period are available for viewing by the public, including any personally identifiable or confidential business information that is included in a comment. We post all comments received before the close of the comment period on the following Web site as soon as possible after they have been received: *http://www.regulations.gov*. Follow the search instructions on that Web site to view public comments.

Comments received timely will also be available for public inspection as they are received, generally beginning approximately 3 weeks after publication of a document, at the headquarters of the Centers for Medicare & Medicaid Services, 7500 Security Boulevard,

Baltimore, Maryland 21244, Monday through Friday of each week from 8:30 a.m. to 4 p.m. To schedule an appointment to view public comments, phone 1–800–743–3951.

Table of Contents

I. Executive Summary and Background
- A. Executive Summary
- B. Background
- C. Health Information Technology

II. Provisions of the Proposed Rule for PFS
- A. Resource-Based Practice Expense (PE) Relative Value Units (RVUs)
- B. Potentially Misvalued Services Under the Physician Fee Schedule
- C. Malpractice Relative Value Units (RVUs)
- D. Geographic Practice Cost Indices (GPCIs)
- E. Medicare Telehealth Services
- F. Valuing New, Revised and Potentially Misvalued Codes
- G. Chronic Care Management (CCM)
- H. Definition of Colorectal Cancer Screening Tests
- I. Payment of Secondary Interpretation of Images
- J. Conditions Regarding Permissible Practice Types for Therapists in Private Practice
- K. Payments for Physicians and Practitioners Managing Patients on Home Dialysis

III. Other Provisions of the Proposed Regulations
- A. Ambulance Extender Provisions
- B. Changes in Geographic Area Delineations for Ambulance Payment
- C. Clinical Laboratory Fee Schedule
- D. Removal of Employment Requirements for Services Furnished ''Incident to'' Rural Health Clinic (RHC) and Federally Qualified Health Center (FQHC) Visits
- E. Access to Identifiable Data for the Center for Medicare and Medicaid Models
- F. Local Coverage Determination Process for Clinical Diagnostic Laboratory Tests
- G. Private Contracting/Opt-out
- H. Solicitation of Comments on the Payment Policy for Substitute Physician Billing Arrangements
- I. Reports of Payments or Other Transfers of Value to Covered Recipients
- J. Physician Compare Web site
- K. Physician Payment, Efficiency, and Quality Improvements—Physician Quality Reporting System
- L. Electronic Health Record (EHR) Incentive Program
- M. Medicare Shared Savings Program
- N. Value-Based Payment Modifier and Physician Feedback Program

IV. Collection of Information Requirements

V. Response to Comments

VI. Regulatory Impact Analysis

Regulations Text

Acronyms

In addition, because of the many organizations and terms to which we refer by acronym in this proposed rule, we are listing these acronyms and their corresponding terms in alphabetical order below:

AAA Abdominal aortic aneurysms
ACO Accountable care organization
AMA American Medical Association
ASC Ambulatory surgical center
ATA American Telehealth Association
ATRA American Taxpayer Relief Act (Pub. L. 112–240)
BBA Balanced Budget Act of 1997 (Pub. L. 105–33)
BBRA [Medicare, Medicaid and State Child Health Insurance Program] Balanced Budget Refinement Act of 1999 (Pub. L. 106–113)
CAD Coronary artery disease
CAH Critical access hospital
CBSA Core-Based Statistical Area
CCM Chronic care management
CEHRT Certified EHR technology
CF Conversion factor
CG–CAHPS Clinician and Group Consumer Assessment of Healthcare Providers and Systems
CLFS Clinical Laboratory Fee Schedule
CNM Certified nurse-midwife
CP Clinical psychologist
CPC Comprehensive Primary Care
CPEP Clinical Practice Expert Panel
CPT [Physicians] Current Procedural Terminology (*CPT codes, descriptions and other data only are copyright 2013 American Medical Association. All rights reserved.*)
CQM Clinical quality measure
CSW Clinical social worker
CT Computed tomography
CY Calendar year
DFAR Defense Federal Acquisition Regulations
DHS Designated health services
DM Diabetes mellitus
DSMT Diabetes self-management training
eCQM Electronic clinical quality measures
EHR Electronic health record
E/M Evaluation and management
EP Eligible professional
eRx Electronic prescribing
ESRD End-stage renal disease
FAR Federal Acquisition Regulations
FFS Fee-for-service
FQHC Federally qualified health center
FR **Federal Register**
GAF Geographic adjustment factor
GAO Government Accountability Office
GPCI Geographic practice cost index
GPO Group purchasing organization
GPRO Group practice reporting option
GTR Genetic Testing Registry
HCPCS Healthcare Common Procedure Coding System
HHS [Department of] Health and Human Services
HOPD Hospital outpatient department
HPSA Health professional shortage area
IDTF Independent diagnostic testing facility
IPPS Inpatient Prospective Payment System
IQR Inpatient Quality Reporting
ISO Insurance service office
IWPUT Intensity of work per unit of time
LCD Local coverage determination
MA Medicare Advantage
MAC Medicare Administrative Contractor
MAP Measure Applications Partnership
MAPCP Multi-payer Advanced Primary Care Practice
MAV Measure application validity [process]
MCP Monthly capitation payment
MedPAC Medicare Payment Advisory Commission
MEI Medicare Economic Index
MFP Multi-Factor Productivity
MIPPA Medicare Improvements for Patients and Providers Act (Pub. L. 110–275)
MMA Medicare Prescription Drug, Improvement and Modernization Act of 2003 (Pub. L. 108–173, enacted on December 8, 2003)
MP Malpractice
MPPR Multiple procedure payment reduction
MRA Magnetic resonance angiography
MRI Magnetic resonance imaging
MSA Metropolitan Statistical Areas
MSPB Medicare Spending per Beneficiary
MSSP Medicare Shared Savings Program
MU Meaningful use
NCD National coverage determination
NCQDIS National Coalition of Quality Diagnostic Imaging Services
NP Nurse practitioner
NPI National Provider Identifier
NPP Nonphysician practitioner
NQS National Quality Strategy
OACT CMS's Office of the Actuary
OBRA '89 Omnibus Budget Reconciliation Act of 1989 (Pub. L. 101–239)
OBRA '90 Omnibus Budget Reconciliation Act of 1990 (Pub. L. 101- 508)
OES Occupational Employment Statistics
OMB Office of Management and Budget
OPPS Outpatient prospective payment system
OT Occupational therapy
PA Physician assistant
PAMA Protecting Access to Medicare Act of 2014 (Pub. L. 113–93)
PC Professional component
PCIP Primary Care Incentive Payment
PE Practice expense
PE/HR Practice expense per hour
PEAC Practice Expense Advisory Committee
PECOS Provider Enrollment, Chain, and Ownership System
PFS Physician Fee Schedule
PLI Professional Liability Insurance
PMA Premarket approval
PQRS Physician Quality Reporting System
PPIS Physician Practice Expense Information Survey
PT Physical therapy
PY Performance year
QCDR Qualified clinical data registry
QRUR Quality and Resources Use Report
RBRVS Resource-based relative value scale
RFA Regulatory Flexibility Act
RHC Rural health clinic
RIA Regulatory impact analysis
RUC American Medical Association/ Specialty Society Relative (Value) Update Committee
RUCA Rural Urban Commuting Area
RVU Relative value unit
SBA Small Business Administration
SGR Sustainable growth rate
SIM State Innovation Model
SLP Speech-language pathology
SMS Socioeconomic Monitoring System
SNF Skilled nursing facility
TAP Technical Advisory Panel
TC Technical component
TIN Tax identification number
UAF Update adjustment factor

UPIN Unique Physician Identification Number
USPSTF United States Preventive Services Task Force
VBP Value-based purchasing
VM Value-Based Payment Modifier

Addenda Available Only Through the Internet on the CMS Web Site

The PFS Addenda along with other supporting documents and tables referenced in this proposed rule are available through the Internet on the CMS Web site at *http://www.cms.gov/Medicare/Medicare-Fee-for-Service-Payment/PhysicianFeeSched/PFS-Federal-Regulation-Notices.html*. Click on the link on the left side of the screen titled, ''PFS Federal Regulations Notices'' for a chronological list of PFS **Federal Register** and other related documents. For the CY 2015 PFS proposed rule, refer to item CMS–1612–P. Readers who experience any problems accessing any of the Addenda or other documents referenced in this proposed rule and posted on the CMS Web site identified above should contact *Larry.Chan@cms.hhs.gov*.

CPT (Current Procedural Terminology) Copyright Notice

Throughout this proposed rule, we use CPT codes and descriptions to refer to a variety of services. We note that CPT codes and descriptions are copyright 2013 American Medical Association. All Rights Reserved. CPT is a registered trademark of the American Medical Association (AMA). Applicable Federal Acquisition Regulations (FAR) and Defense Federal Acquisition Regulations (DFAR) apply.

I. Executive Summary and Background

A. Executive Summary

1. Purpose

This major proposed rule would revise payment polices under the Medicare Physician Fee Schedule (PFS) and make other policy changes related to Medicare Part B payment. These changes would be applicable to services furnished in CY 2015.

2. Summary of the Major Provisions

The Social Security Act (the Act) requires us to establish payments under the PFS based on national uniform relative value units (RVUs) that account for the relative resources used in furnishing a service. The Act requires that RVUs be established for three categories of resources: work, practice expense (PE); and malpractice (MP) expense; and, that we establish by regulation each year's payment amounts for all physicians' services, incorporating geographic adjustments to reflect the variations in the costs of furnishing services in different geographic areas. In this major proposed rule, we propose RVUs for CY 2015 for the PFS, and other Medicare Part B payment policies, to ensure that our payment systems are updated to reflect changes in medical practice and the relative value of services, as well as changes in the statute. In addition, this proposed rule includes discussions and proposals regarding:

- Misvalued PFS Codes.
- Telehealth Services.
- Chronic Care Management Services.
- Establishing Values for New, Revised, and Misvalued Codes.
- Updating the Ambulance Fee Schedule regulations.
- Changes to Core-Based Statistical Areas for Ambulance Payment.
- Updating the—
  - ++ Physician Compare Web site.
  - ++ Physician Quality Reporting System.
  - ++ Medicare Shared Savings Program.
  - ++ Electronic Health Record (EHR) Incentive Program.
- Value-Based Payment Modifier and the Physician Feedback Program.

3. Summary of Costs and Benefits

The Act requires that annual adjustments to PFS RVUs not cause annual estimated expenditures to differ by more than $20 million from what they would have been had the adjustments not been made. If adjustments to RVUs would cause expenditures to change by more than $20 million, we must make adjustments to preserve budget neutrality. These adjustments can affect the distribution of Medicare expenditures across specialties. In addition, several proposed changes would affect the specialty distribution of Medicare expenditures. When considering the combined impact of work, PE, and MP RVU changes, the projected payment impacts are small for most specialties; however, the impact would be larger for a few specialties. The most significant impacts are for radiation therapy centers and radiation oncology for which there would be decreases of 8 and 4 percent, respectively. These reductions primarily stem from a proposal discussed in section II.A. to consider an equipment item as indirect rather than direct practice expense. Payment for chronic care management (CCM) services is projected to have a positive effect on family practice, internal medicine, and geriatrics. This proposed rule includes new proposed MP RVUs based upon CY 2015 five-year review of MP RVUs. For most specialties, the proposed revisions for the five-year review of MP RVUs would result in minor overall changes in RVUs, with only ophthalmology (-2 percent) having a projected change of at least 2 percent.

B. Background

Since January 1, 1992, Medicare has paid for physicians' services under section 1848 of the Act, ''Payment for Physicians' Services.'' The system relies on national relative values that are established for work, PE, and MP, which are adjusted for geographic cost variations. These values are multiplied by a conversion factor (CF) to convert the RVUs into payment rates. The concepts and methodology underlying the PFS were enacted as part of the Omnibus Budget Reconciliation Act of 1989 (Pub. L. 101–239, enacted on December 19, 1989) (OBRA '89), and the Omnibus Budget Reconciliation Act of 1990 (Pub. L. 101–508, enacted on November 5, 1990) (OBRA '90). The final rule published on November 25, 1991 (56 FR 59502) set forth the first fee schedule used for payment for physicians' services.

We note that throughout this proposed rule, unless otherwise noted, the term ''practitioner'' is used to describe both physicians and nonphysician practitioners (NPPs) who are permitted to bill Medicare under the PFS for services furnished to Medicare beneficiaries.

1. Development of the Relative Values

a. Work RVUs

The work RVUs established for the initial fee schedule, which was implemented on January 1, 1992, were developed with extensive input from the physician community. A research team at the Harvard School of Public Health developed the original work RVUs for most codes under a cooperative agreement with the Department of Health and Human Services (HHS). In constructing the code-specific vignettes used in determining the original physician work RVUs, Harvard worked with panels of experts, both inside and outside the federal government, and obtained input from numerous physician specialty groups.

As specified in section 1848(c)(1)(A) of the Act, the work component of physicians' services means the portion of the resources used in furnishing the service that reflects physician time and intensity. We establish work RVUs for new, revised and potentially misvalued codes based on our review of information that generally includes, but is not limited to, recommendations

received from the American Medical Association/Specialty Society Relative Value Update Committee (RUC), the Health Care Professionals Advisory Committee (HCPAC), the Medicare Payment Advisory Commission (MedPAC), and other public commenters; medical literature and comparative databases; as well as a comparison of the work for other codes within the Medicare PFS, and consultation with other physicians and health care professionals within CMS and the federal government. We also assess the methodology and data used to develop the recommendations submitted to us by the RUC and other public commenters, and the rationale for their recommendations.

b. Practice Expense RVUs

Initially, only the work RVUs were resource-based, and the PE and MP RVUs were based on average allowable charges. Section 121 of the Social Security Act Amendments of 1994 (Pub. L. 103–432, enacted on October 31, 1994), amended section 1848(c)(2)(C)(ii) of the Act and required us to develop resource-based PE RVUs for each physicians' service beginning in 1998. We were required to consider general categories of expenses (such as office rent and wages of personnel, but excluding malpractice expenses) comprising PEs. The PE RVUs continue to represent the portion of these resources involved in furnishing PFS services.

Originally, the resource-based method was to be used beginning in 1998, but section 4505(a) of the Balanced Budget Act of 1997 (Pub. L. 105–33, enacted on August 5, 1997) (BBA) delayed implementation of the resource-based PE RVU system until January 1, 1999. In addition, section 4505(b) of the BBA provided for a 4-year transition period from the charge-based PE RVUs to the resource-based PE RVUs.

We established the resource-based PE RVUs for each physicians' service in a final rule, published on November 2, 1998 (63 FR 58814), effective for services furnished in CY 1999. Based on the requirement to transition to a resource-based system for PE over a 4-year period, payment rates were not fully based upon resource-based PE RVUs until CY 2002. This resource-based system was based on two significant sources of actual PE data: The Clinical Practice Expert Panel (CPEP) data and the AMA's Socioeconomic Monitoring System (SMS) data. (These data sources are described in greater detail in the CY 2012 final rule with comment period (76 FR 73033).)

Separate PE RVUs are established for services furnished in facility settings, such as a hospital outpatient department (HOPD) or an ambulatory surgical center (ASC), and in nonfacility settings, such as a physician's office. The nonfacility RVUs reflect all of the direct and indirect PEs involved in furnishing a service described by a particular HCPCS code. The difference, if any, in these PE RVUs generally results in a higher payment in the nonfacility setting because in the facility settings some costs are borne by the facility. Medicare's payment to the facility (such as the outpatient prospective payment system (OPPS) payment to the HOPD) would reflect costs typically incurred by the facility. Thus, payment associated with those facility resources is not made under the PFS.

Section 212 of the Balanced Budget Refinement Act of 1999 (Pub. L. 106–113, enacted on November 29, 1999) (BBRA) directed the Secretary of Health and Human Services (the Secretary) to establish a process under which we accept and use, to the maximum extent practicable and consistent with sound data practices, data collected or developed by entities and organizations to supplement the data we normally collect in determining the PE component. On May 3, 2000, we published the interim final rule (65 FR 25664) that set forth the criteria for the submission of these supplemental PE survey data. The criteria were modified in response to comments received, and published in the **Federal Register** (65 FR 65376) as part of a November 1, 2000 final rule. The PFS final rules published in 2001 and 2003, respectively, (66 FR 55246 and 68 FR 63196) extended the period during which we would accept these supplemental data through March 1, 2005.

In the CY 2007 PFS final rule with comment period (71 FR 69624), we revised the methodology for calculating direct PE RVUs from the top-down to the bottom-up methodology beginning in CY 2007. We adopted a 4-year transition to the new PE RVUs. This transition was completed for CY 2010. In the CY 2010 PFS final rule with comment period, we updated the practice expense per hour (PE/HR) data that are used in the calculation of PE RVUs for most specialties (74 FR 61749). In CY 2010, we began a 4-year transition to the new PE RVUs using the updated PE/HR data, which was completed for CY 2013.

c. Malpractice RVUs

Section 4505(f) of the BBA amended section 1848(c) of the Act to require that we implement resource-based MP RVUs for services furnished on or after CY 2000. The resource-based MP RVUs were implemented in the PFS final rule with comment period published November 2, 1999 (64 FR 59380). The MP RVUs are based on commercial and physician-owned insurers' malpractice insurance premium data from all the states, the District of Columbia, and Puerto Rico. For more information on MP RVUs, see section II.C. of this proposed rule.

d. Refinements to the RVUs

Section 1848(c)(2)(B)(i) of the Act requires that we review RVUs no less often than every 5 years. Prior to CY 2013, we conducted periodic reviews of work RVUs and PE RVUs independently. We completed five-year reviews of work RVUs that were effective for calendar years 1997, 2002, 2007, and 2012.

Although refinements to the direct PE inputs initially relied heavily on input from the RUC Practice Expense Advisory Committee (PEAC), the shifts to the bottom-up PE methodology in CY 2007 and to the use of the updated PE/HR data in CY 2010 have resulted in significant refinements to the PE RVUs in recent years.

In the CY 2012 PFS final rule with comment period (76 FR 73057), we finalized a proposal to consolidate reviews of work and PE RVUs under section 1848(c)(2)(B) of the Act and reviews of potentially misvalued codes under section 1848(c)(2)(K) of the Act into one annual process.

With regard to MP RVUs, we completed five-year reviews of MP that were effective in CY 2005 and CY 2010. This proposed rule includes a proposal for a five-year review for CY 2015.

In addition to the five-year reviews, beginning for CY 2009, CMS and the RUC have identified and reviewed a number of potentially misvalued codes on an annual basis based on various identification screens. This annual review of work and PE RVUs for potentially misvalued codes was supplemented by the amendments to section 1848 of the Act, as enacted by section 3134 of the Affordable Care Act, which requires the agency to periodically identify, review and adjust values for potentially misvalued codes.

e. Application of Budget Neutrality to Adjustments of RVUs

As described in section VI.C.1. of this proposed rule, in accordance with section 1848(c)(2)(B)(ii)(II) of the Act, if revisions to the RVUs would cause expenditures for the year to change by more than $20 million, we make

adjustments to ensure that expenditures do not increase or decrease by more than $20 million.

2. Calculation of Payments Based on RVUs

To calculate the payment for each physicians' service, the components of the fee schedule (work, PE, and MP RVUs) are adjusted by geographic practice cost indices (GPCIs) to reflect the variations in the costs of furnishing the services. The GPCIs reflect the relative costs of physician work, PE, and MP in an area compared to the national average costs for each component. (See section II.D of this proposed rule for more information about GPCIs.)

RVUs are converted to dollar amounts through the application of a CF, which is calculated based on a statutory formula by CMS's Office of the Actuary (OACT). The CF for a given year is calculated using (a) the productivity-adjusted increase in the Medicare Economic Index (MEI) and (b) the Update Adjustment Factor (UAF), which is calculated by taking into account the Medicare Sustainable Growth Rate (SGR), an annual growth rate intended to control growth in aggregate Medicare expenditures for physicians' services, and the allowed and actual expenditures for physicians' services. The formula for calculating the Medicare fee schedule payment amount for a given service and fee schedule area can be expressed as:

$$\text{Payment} = [(\text{RVU work} \times \text{GPCI work}) + (\text{RVU PE} \times \text{GPCI PE}) + (\text{RVU MP} \times \text{GPCI MP})] \times \text{CF}.$$

3. Separate Fee Schedule Methodology for Anesthesia Services

Section 1848(b)(2)(B) of the Act specifies that the fee schedule amounts for anesthesia services are to be based on a uniform relative value guide, with appropriate adjustment of an anesthesia conversion factor, in a manner to assure that fee schedule amounts for anesthesia services are consistent with those for other services of comparable value. Therefore, there is a separate fee schedule methodology for anesthesia services. Specifically, we establish a separate conversion factor for anesthesia services and we utilize the uniform relative value guide, or base units, as well as time units, to calculate the fee schedule amounts for anesthesia services. Since anesthesia services are not valued using RVUs, a separate methodology for locality adjustments is also necessary. This involves an adjustment to the national anesthesia CF for each payment locality.

4. Most Recent Changes to the Fee Schedule

The CY 2014 PFS final rule with comment period (78 FR 74230) implemented changes to the PFS and other Medicare Part B payment policies. It also finalized many of the CY 2013 interim final RVUs and established interim final RVUs for new and revised codes for CY 2014 to ensure that our payment system is updated to reflect changes in medical practice, coding changes, and the relative values of services. It also implemented section 635 of the American Taxpayer Relief Act of 2012 (Pub. L. 112–240, enacted on January 2, 2013) (ATRA), which revised the equipment utilization rate assumption for advanced imaging services furnished on or after January 1, 2014.

Also, in the CY 2014 PFS final rule with comment period, we announced the following for CY 2014: the total PFS update of −20.1 percent; the initial estimate for the SGR of −16.7 percent; and a CF of $27.2006. These figures were calculated based on the statutory provisions in effect on November 27, 2013, when the CY 2014 PFS final rule with comment period was issued.

The Pathway for SGR Reform Act of 2013 (Pub. L. 113–67, enacted on December 26, 2013) established a 0.5 percent update to the PFS CF through March 31, 2014 and the Protecting Access to Medicare Act of 2014 (Pub. L. 113–93, enacted on April 1, 2014) (PAMA) extended this 0.5 percent update through December 31, 2014. As a result, the CF for CY 2014 that was published in the CY 2014 final rule with comment period (78 FR 74230) was revised to $35.8228 for services furnished on or after January 1, 2014 and on or before December 31, 2014. The PAMA provides for a 0.0 percent update to the PFS for services furnished on or after January 1, 2015 and on or before March 31, 2015.

The Pathway for SGR Reform Act extended through March 31, 2014 several provisions of Medicare law that would have otherwise expired on December 31, 2013. The PAMA extended these same provisions further through March 31, 2015. A list of these provisions follows.

- The 1.0 floor on the work geographic practice cost index
- The exceptions process for outpatient therapy caps
- The manual medical review process for therapy services
- The application of the therapy caps and related provisions to services furnished in HOPDs

In addition, section 220 of the PAMA included several provisions affecting the valuation process for services under the PFS. Section 220(a) of the PAMA amended section 1848(c)(2) of the Act to add a new subparagraph (M). The new subparagraph (M) provides that the Secretary may collect or obtain information from any eligible professional or any other source on the resources directly or indirectly related to furnishing services for which payment is made under the PFS, and that such information may be used in the determination of relative values for services under the PFS. Such information may include the time involved in furnishing services; the amounts, types and prices of practice expense inputs; overhead and accounting information for practices of physicians and other suppliers, and any other elements that would improve the valuation of services under the PFS. This information may be collected or obtained through surveys of physicians or other suppliers, providers of services, manufacturers and vendors; surgical logs, billing systems, or other practice or facility records; EHRs; and any other mechanism determined appropriate by the Secretary. If we use this information, we are required to disclose the source and use of the information in rulemaking, and to make available aggregated information that does not disclose individual eligible professionals, group practices, or information obtained pursuant to a nondisclosure agreement. Beginning with fiscal year 2014, the Secretary may compensate eligible professionals for submission of data.

Section 220(c) of the PAMA amended section 1848(c)(2)(K)(ii) of the Act to expand the categories of services that the Secretary is directed to examine for the purpose of identifying potentially misvalued codes. The nine new categories are as follows:

- Codes that account for the majority of spending under the PFS.
- Codes for services that have experienced a substantial change in the hospital length of stay or procedure time.
- Codes for which there may be a change in the typical site of service since the code was last valued.
- Codes for which there is a significant difference in payment for the same service between different sites of service.
- Codes for which there may be anomalies in relative values within a family of codes.
- Codes for services where there may be efficiencies when a service is

furnished at the same time as other services.

- Codes with high intra-service work per unit of time.
- Codes with high PE RVUs.
- Codes with high cost supplies.

(See section II.B.2 of this final rule with comment period for more information about misvalued codes.).

Section 220(i) of the PAMA also requires the Secretary to make publicly available the information we considered when establishing the multiple procedure payment reduction (MPPR) policy for the professional component of advanced imaging procedures. The policy reduces the amount paid for the professional component when two advanced imaging procedures are furnished in the same session. The policy was effective for individual physicians on January 1, 2012 and for physicians in the same group practice on January 1, 2013.

In addition, section 220 of the PAMA includes other provisions regarding valuation of services under the PFS that take effect in future years. Section 220(d) of the PAMA establishes an annual target from CY 2017 through CY 2020 for reductions in PFS expenditures resulting from adjustments to relative values of misvalued services. The target is calculated as 0.5 percent of the estimated amount of expenditures under the fee schedule for the year. If the net reduction in expenditures for the year is equal to or greater than the target for the year, the funds shall be redistributed in a budget-neutral manner within the PFS. The amount by which such reduced expenditures exceed the target for the year shall be treated as a reduction in expenditures for the subsequent year, for purposes of determining whether the target has or has not been met. The legislation includes an exemption from budget neutrality if the target is not met. Other provisions of section 220 of the PAMA include a 2-year phase-in for reductions in RVUs of at least 20 percent for potentially misvalued codes that do not involve coding changes and certain adjustments to the fee schedule areas in California. These provisions will be addressed as we implement them in future rulemaking.

On March 5, 2014, we submitted to MedPAC an estimate of the SGR and CF applicable to Medicare payments for physicians' services for CY 2015, as required by section 1848(d)(1)(E) of the Act. The actual values used to compute physician payments for CY 2015 will be based on later data and are scheduled to be published by November 1, 2014, as part of the CY 2015 PFS final rule with comment period.

C. Health Information Technology

The Department of Health and Human Services (HHS) believes all patients, their families, and their health care providers should have consistent and timely access to their health information in a standardized format that can be securely exchanged between the patient, providers, and others involved in the patient's care. (HHS August 2013 Statement, ''Principles and Strategies for Accelerating Health Information Exchange,'' see *http://www.healthit.gov/sites/default/files/acceleratinghieprinciples_strategy.pdf*) HHS is committed to accelerating health information exchange (HIE) through the use of electronic health records (EHRs) and other types of health information technology (HIT) across the broader care continuum through a number of initiatives including: (1) Alignment of incentives and payment adjustments to encourage provider adoption and optimization of HIT and HIE services through Medicare and Medicaid payment policies; (2) adoption of common standards and certification requirements for interoperable HIT; (3) support for privacy and security of patient information across all HIE-focused initiatives; and (4) governance of health information networks. These initiatives are designed to encourage HIE among health care providers, including professionals and hospitals eligible for the Medicare and Medicaid EHR Incentive Programs and those who are not eligible for the EHR Incentive Programs, and are designed to improve care delivery and coordination across the entire care continuum. For example, the Transition of Care Measure #2 in Stage 2 of the Medicare and Medicaid EHR Incentive Programs requires HIE to share summary records for more than 10 percent of care transitions. In addition, to increase flexibility in ONC's HIT Certification Program and expand HIT certification, ONC has issued a proposed rule concerning a voluntary 2015 Edition of EHR certification criteria, which would more easily accommodate the certification of HIT used in all health care settings where health care providers are not typically eligible for incentive payments under the EHR Incentive Programs, to facilitate greater HIE across the entire care continuum. We believe that HIE and the use of certified EHRs can effectively and efficiently help providers improve internal care delivery practices, support management of patient care across the continuum, and support the reporting of electronically specified clinical quality measures (eCQMs). More information on the Voluntary 2015 Edition EHR Certification Criteria proposed rule is available at *http://healthit.gov/policy-researchers-implementers/standards-and-certification-regulations.*

II. Provisions of the Proposed Rule for PFS

A. Resource-Based Practice Expense (PE) Relative Value Units (RVUs)

1. Overview

Practice expense (PE) is the portion of the resources used in furnishing a service that reflects the general categories of physician and practitioner expenses, such as office rent and personnel wages, but excluding MP expenses, as specified in section 1848(c)(1)(B) of the Act. As required by section 1848(c)(2)(C)(ii) of the Act, we use a resource-based system for determining PE RVUs for each physician's service. We develop PE RVUs by considering the direct and indirect practice resources involved in furnishing each service. Direct expense categories include clinical labor, medical supplies, and medical equipment. Indirect expenses include administrative labor, office expense, and all other expenses. The sections that follow provide more detailed information about the methodology for translating the resources involved in furnishing each service into service-specific PE RVUs. We refer readers to the CY 2010 PFS final rule with comment period (74 FR 61743 through 61748) for a more detailed explanation of the PE methodology.

2. Practice Expense Methodology

a. Direct Practice Expense

We determine the direct PE for a specific service by adding the costs of the direct resources (that is, the clinical staff, medical supplies, and medical equipment) typically involved with furnishing that service. The costs of the resources are calculated using the refined direct PE inputs assigned to each CPT code in our PE database, which are generally based on our review of recommendations received from the RUC and those provided in response to public comment periods. For a detailed explanation of the direct PE methodology, including examples, we refer readers to the Five-Year Review of Work Relative Value Units under the PFS and Proposed Changes to the Practice Expense Methodology proposed notice (71 FR 37242) and the CY 2007 PFS final rule with comment period (71 FR 69629).

b. Indirect Practice Expense per Hour Data

We use survey data on indirect PEs incurred per hour worked in developing the indirect portion of the PE RVUs. Prior to CY 2010, we primarily used the practice expense per hour (PE/HR) by specialty that was obtained from the AMA's Socioeconomic Monitoring Surveys (SMS). The AMA administered a new survey in CY 2007 and CY 2008, the Physician Practice Expense Information Survey (PPIS). The PPIS is a multispecialty, nationally representative, PE survey of both physicians and nonphysician practitioners (NPPs) paid under the PFS using a survey instrument and methods highly consistent with those used for the SMS and the supplemental surveys. The PPIS gathered information from 3,656 respondents across 51 physician specialty and health care professional groups. We believe the PPIS is the most comprehensive source of PE survey information available. We used the PPIS data to update the PE/HR data for the CY 2010 PFS for almost all of the Medicare-recognized specialties that participated in the survey.

When we began using the PPIS data in CY 2010, we did not change the PE RVU methodology itself or the manner in which the PE/HR data are used in that methodology. We only updated the PE/HR data based on the new survey. Furthermore, as we explained in the CY 2010 PFS final rule with comment period (74 FR 61751), because of the magnitude of payment reductions for some specialties resulting from the use of the PPIS data, we transitioned its use over a 4-year period from the previous PE RVUs to the PE RVUs developed using the new PPIS data. As provided in the CY 2010 PFS final rule with comment period (74 FR 61751), the transition to the PPIS data was complete for CY 2013. Therefore, PE RVUs from CY 2013 forward are developed based entirely on the PPIS data, except as noted in this section.

Section 1848(c)(2)(H)(i) of the Act requires us to use the medical oncology supplemental survey data submitted in 2003 for oncology drug administration services. Therefore, the PE/HR for medical oncology, hematology, and hematology/oncology reflects the continued use of these supplemental survey data.

Supplemental survey data on independent labs from the College of American Pathologists were implemented for payments beginning in CY 2005. Supplemental survey data from the National Coalition of Quality Diagnostic Imaging Services (NCQDIS), representing independent diagnostic testing facilities (IDTFs), were blended with supplementary survey data from the American College of Radiology (ACR) and implemented for payments beginning in CY 2007. Neither IDTFs, nor independent labs, participated in the PPIS. Therefore, we continue to use the PE/HR that was developed from their supplemental survey data.

Consistent with our past practice, the previous indirect PE/HR values from the supplemental surveys for these specialties were updated to CY 2006 using the MEI to put them on a comparable basis with the PPIS data.

We also do not use the PPIS data for reproductive endocrinology and spine surgery since these specialties currently are not separately recognized by Medicare, nor do we have a method to blend the PPIS data with Medicare-recognized specialty data.

Previously, we established PE/HR values for various specialties without SMS or supplemental survey data by crosswalking them to other similar specialties to estimate a proxy PE/HR. For specialties that were part of the PPIS for which we previously used a crosswalked PE/HR, we instead used the PPIS-based PE/HR. We continue previous crosswalks for specialties that did not participate in the PPIS. However, beginning in CY 2010 we changed the PE/HR crosswalk for portable x-ray suppliers from radiology to IDTF, a more appropriate crosswalk because these specialties are more similar to each other with respect to work time.

For registered dietician services, the resource-based PE RVUs have been calculated in accordance with the final policy that crosswalks the specialty to the ''All Physicians'' PE/HR data, as adopted in the CY 2010 PFS final rule with comment period (74 FR 61752) and discussed in more detail in the CY 2011 PFS final rule with comment period (75 FR 73183).

c. Allocation of PE to Services

To establish PE RVUs for specific services, it is necessary to establish the direct and indirect PE associated with each service.

(1) Direct Costs

The relative relationship between the direct cost portions of the PE RVUs for any two services is determined by the relative relationship between the sum of the direct cost resources (that is, the clinical staff, equipment, and supplies) typically involved with furnishing each of the services. The costs of these resources are calculated from the refined direct PE inputs in our PE database. For example, if one service has a direct cost sum of $400 from our PE database and another service has a direct cost sum of $200, the direct portion of the PE RVUs of the first service would be twice as much as the direct portion of the PE RVUs for the second service.

(2) Indirect Costs

Section II.A.2.b. of this proposed rule describes the current data sources for specialty-specific indirect costs used in our PE calculations. We allocated the indirect costs to the code level on the basis of the direct costs specifically associated with a code and the greater of either the clinical labor costs or the physician work RVUs. We also incorporated the survey data described earlier in the PE/HR discussion. The general approach to developing the indirect portion of the PE RVUs is as follows:

- For a given service, we use the direct portion of the PE RVUs calculated as previously described and the average percentage that direct costs represent of total costs (based on survey data) across the specialties that furnish the service to determine an initial indirect allocator. In other words, the initial indirect allocator is calculated so that the direct costs equal the average percentage of direct costs of those specialties furnishing the service. For example, if the direct portion of the PE RVUs for a given service is 2.00 and direct costs, on average, represented 25 percent of total costs for the specialties that furnished the service, the initial indirect allocator would be calculated so that it equals 75 percent of the total PE RVUs. Thus, in this example, the initial indirect allocator would equal 6.00, resulting in a total PE RVUs of 8.00 (2.00 is 25 percent of 8.00 and 6.00 is 75 percent of 8.00).
- Next, we add the greater of the work RVUs or clinical labor portion of the direct portion of the PE RVUs to this initial indirect allocator. In our example, if this service had work RVUs of 4.00 and the clinical labor portion of the direct PE RVUs was 1.50, we would add 4.00 (since the 4.00 work RVUs are greater than the 1.50 clinical labor portion) to the initial indirect allocator of 6.00 to get an indirect allocator of 10.00. In the absence of any further use of the survey data, the relative relationship between the indirect cost portions of the PE RVUs for any two services would be determined by the relative relationship between these indirect cost allocators. For example, if one service had an indirect cost allocator of 10.00 and another service had an indirect cost allocator of 5.00,

the indirect portion of the PE RVUs of the first service would be twice as great as the indirect portion of the PE RVUs for the second service.

• Next, we incorporate the specialty-specific indirect PE/HR data into the calculation. In our example, if, based on the survey data, the average indirect cost of the specialties furnishing the first service with an allocator of 10.00 was half of the average indirect cost of the specialties furnishing the second service with an indirect allocator of 5.00, the indirect portion of the PE RVUs of the first service would be equal to that of the second service.

d. Facility and Nonfacility Costs

For procedures that can be furnished in a physician's office, as well as in a hospital or other facility setting, we establish two PE RVUs: facility and nonfacility. The methodology for calculating PE RVUs is the same for both the facility and nonfacility RVUs, but is applied independently to yield two separate PE RVUs. Because in calculating the PE RVUs for services furnished in a facility, we do not include resources that would generally not be provided by physicians when furnishing the service in a facility, the facility PE RVUs are generally lower than the nonfacility PE RVUs. Medicare makes a separate payment to the facility for its costs of furnishing a service.

e. Services With Technical Components (TCs) and Professional Components (PCs)

Diagnostic services are generally comprised of two components: a professional component (PC); and a technical component (TC). The PC and TC may be furnished independently or by different providers, or they may be furnished together as a ''global'' service. When services have separately billable PC and TC components, the payment for the global service equals the sum of the payment for the TC and PC. To achieve this we use a weighted average of the ratio of indirect to direct costs across all the specialties that furnish the global service, TCs, and PCs; that is, we apply the same weighted average indirect percentage factor to allocate indirect expenses to the global service, PCs, and TCs for a service. (The direct PE RVUs for the TC and PC sum to the global under the bottom-up methodology.)

f. PE RVU Methodology

For a more detailed description of the PE RVU methodology, we refer readers to the CY 2010 PFS final rule with comment period (74 FR 61745 through 61746).

(1) Setup File

First, we create a setup file for the PE methodology. The setup file contains the direct cost inputs, the utilization for each procedure code at the specialty and facility/nonfacility place of service level, and the specialty-specific PE/HR data calculated from the surveys.

(2) Calculate the Direct Cost PE RVUs

Sum the costs of each direct input.

Step 1: Sum the direct costs of the inputs for each service. Apply a scaling adjustment to the direct inputs.

Step 2: Calculate the aggregate pool of direct PE costs for the current year. This is the product of the current aggregate PE (direct and indirect) RVUs, the CF, and the average direct PE percentage from the survey data used for calculating the PE/HR by specialty.

Step 3: Calculate the aggregate pool of direct PE costs for use in ratesetting. This is the product of the aggregated direct costs for all services from Step 1 and the utilization data for that service.

Step 4: Using the results of Step 2 and Step 3, calculate a direct PE scaling adjustment to ensure that the aggregate pool of direct PE costs calculated in Step 3 does not vary from the aggregate pool of direct PE costs for the current year. Apply the scaling factor to the direct costs for each service (as calculated in Step 1).

Step 5: Convert the results of Step 4 to an RVU scale for each service. To do this, divide the results of Step 4 by the CF. Note that the actual value of the CF used in this calculation does not influence the final direct cost PE RVUs, as long as the same CF is used in Step 2 and Step 5. Different CFs will result in different direct PE scaling factors, but this has no effect on the final direct cost PE RVUs since changes in the CFs and changes in the associated direct scaling factors offset one another.

(3) Create the Indirect Cost PE RVUs

Create indirect allocators.

Step 6: Based on the survey data, calculate direct and indirect PE percentages for each physician specialty.

Step 7: Calculate direct and indirect PE percentages at the service level by taking a weighted average of the results of Step 6 for the specialties that furnish the service. Note that for services with TCs and PCs, the direct and indirect percentages for a given service do not vary by the PC, TC, and global service.

Step 8: Calculate the service level allocators for the indirect PEs based on the percentages calculated in Step 7. The indirect PEs are allocated based on the three components: The direct PE RVUs; the clinical PE RVUs; and the work RVUs. For most services the indirect allocator is: Indirect PE percentage * (direct PE RVUs/direct percentage) + work RVUs.

There are two situations where this formula is modified:

• If the service is a global service (that is, a service with global, professional, and technical components), then the indirect PE allocator is: indirect percentage (direct PE RVUs/direct percentage) + clinical PE RVUs + work RVUs.

• If the clinical labor PE RVUs exceed the work RVUs (and the service is not a global service), then the indirect allocator is: indirect PE percentage (direct PE RVUs/direct percentage) + clinical PE RVUs.

(**Note:** For global services, the indirect PE allocator is based on both the work RVUs and the clinical labor PE RVUs. We do this to recognize that, for the PC service, indirect PEs will be allocated using the work RVUs, and for the TC service, indirect PEs will be allocated using the direct PE RVUs and the clinical labor PE RVUs. This also allows the global component RVUs to equal the sum of the PC and TC RVUs.)

For presentation purposes in the examples in Table 1, the formulas were divided into two parts for each service.

• The first part does not vary by service and is the indirect percentage (direct PE RVUs/direct percentage).

• The second part is either the work RVU, clinical labor PE RVU, or both depending on whether the service is a global service and whether the clinical PE RVUs exceed the work RVUs (as described earlier in this step).

Apply a scaling adjustment to the indirect allocators.

Step 9: Calculate the current aggregate pool of indirect PE RVUs by multiplying the current aggregate pool of PE RVUs by the average indirect PE percentage from the survey data.

Step 10: Calculate an aggregate pool of indirect PE RVUs for all PFS services by adding the product of the indirect PE allocators for a service from Step 8 and the utilization data for that service.

Step 11: Using the results of Step 9 and Step 10, calculate an indirect PE adjustment so that the aggregate indirect allocation does not exceed the available aggregate indirect PE RVUs and apply it to indirect allocators calculated in Step 8.

Calculate the indirect practice cost index.

Step 12: Using the results of Step 11, calculate aggregate pools of specialty-specific adjusted indirect PE allocators for all PFS services for a specialty by adding the product of the adjusted

indirect PE allocator for each service and the utilization data for that service.

Step 13: Using the specialty-specific indirect PE/HR data, calculate specialty-specific aggregate pools of indirect PE for all PFS services for that specialty by adding the product of the indirect PE/HR for the specialty, the work time for the service, and the specialty's utilization for the service across all services furnished by the specialty.

Step 14: Using the results of Step 12 and Step 13, calculate the specialty-specific indirect PE scaling factors.

Step 15: Using the results of Step 14, calculate an indirect practice cost index at the specialty level by dividing each specialty-specific indirect scaling factor by the average indirect scaling factor for the entire PFS.

Step 16: Calculate the indirect practice cost index at the service level to ensure the capture of all indirect costs. Calculate a weighted average of the practice cost index values for the specialties that furnish the service. (Note: For services with TCs and PCs, we calculate the indirect practice cost index across the global service, PCs, and TCs. Under this method, the indirect practice cost index for a given service (for example, echocardiogram) does not vary by the PC, TC, and global service.)

Step 17: Apply the service level indirect practice cost index calculated in Step 16 to the service level adjusted indirect allocators calculated in Step 11 to get the indirect PE RVUs.

(4) Calculate the Final PE RVUs

Step 18: Add the direct PE RVUs from Step 6 to the indirect PE RVUs from Step 17 and apply the final PE budget neutrality (BN) adjustment. The final PE BN adjustment is calculated by comparing the results of Step 18 to the current pool of PE RVUs. This final BN adjustment is required to redistribute RVUs from step 18 to all PE RVUs in the PFS, and because certain specialties are excluded from the PE RVU calculation for ratesetting purposes, but we note that all specialties are included for purposes of calculating the final BN adjustment. (See ''Specialties excluded from ratesetting calculation'' later in this section.)

(5) Setup File Information

• Specialties excluded from ratesetting calculation: For the purposes of calculating the PE RVUs, we exclude certain specialties, such as certain NPPs paid at a percentage of the PFS and low-volume specialties, from the calculation. These specialties are included for the purposes of calculating the BN adjustment. They are displayed in Table 1.

TABLE 1—SPECIALTIES EXCLUDED FROM RATESETTING CALCULATION

Specialty code	Specialty description
49	Ambulatory surgical center.
50	Nurse practitioner.
51	Medical supply company with certified orthotist.
52	Medical supply company with certified prosthetist.
53	Medical supply company with certified prosthetist-orthotist.
54	Medical supply company not included in 51, 52, or 53.
55	Individual certified orthotist.
56	Individual certified prosthetist.
57	Individual certified prosthetist-orthotist.
58	Medical supply company with registered pharmacist.
59	Ambulance service supplier, e.g., private ambulance companies, funeral homes, etc.
60	Public health or welfare agencies.
61	Voluntary health or charitable agencies.
73	Mass immunization roster biller.
74	Radiation therapy centers.
87	All other suppliers (e.g., drug and department stores).
88	Unknown supplier/provider specialty.
89	Certified clinical nurse specialist.
96	Optician.
97	Physician assistant.
A0	Hospital.
A1	SNF.
A2	Intermediate care nursing facility.
A3	Nursing facility, other.
A4	HHA.
A5	Pharmacy.
A6	Medical supply company with respiratory therapist.
A7	Department store.
B2	Pedorthic personnel.
B3	Medical supply company with pedorthic personnel.

• *Crosswalk certain low volume physician specialties:* Crosswalk the utilization of certain specialties with relatively low PFS utilization to the associated specialties.

• *Physical therapy utilization:* Crosswalk the utilization associated with all physical therapy services to the specialty of physical therapy.

• *Identify professional and technical services not identified under the usual TC and 26 modifiers:* Flag the services that are PC and TC services, but do not use TC and 26 modifiers (for example, electrocardiograms). This flag associates the PC and TC with the associated global code for use in creating the indirect PE RVUs. For example, the professional service, CPT code 93010 (Electrocardiogram, routine ECG with at least 12 leads; interpretation and report only), is associated with the global service, CPT code 93000 (Electrocardiogram, routine ECG with at least 12 leads; with interpretation and report).

• *Payment modifiers:* Payment modifiers are accounted for in the creation of the file consistent with current payment policy as implemented in claims processing. For example, services billed with the assistant at surgery modifier are paid 16 percent of the PFS amount for that service; therefore, the utilization file is modified to only account for 16 percent of any service that contains the assistant at surgery modifier. Similarly, for those services to which volume adjustments are made to account for the payment modifiers, time adjustments are applied as well. For time adjustments to surgical services, the intraoperative portion in the work time file is used; where it is not present, the intraoperative percentage from the payment files used by contractors to process Medicare claims is used instead. Where neither is available, we use the payment adjustment ratio to adjust the time accordingly. Table 2 details the manner in which the modifiers are applied.

TABLE 2—APPLICATION OF PAYMENT MODIFIERS TO UTILIZATION FILES

Modifier	Description	Volume adjustment	Time adjustment
80,81,82	Assistant at Surgery	16%	Intraoperative portion.
AS	Assistant at Surgery—Physician Assistant.	14% (85% * 16%)	Intraoperative portion.
50 or LT and RT	Bilateral Surgery	150%	150% of work time.
51	Multiple Procedure	50%	Intraoperative portion.

TABLE 2—APPLICATION OF PAYMENT MODIFIERS TO UTILIZATION FILES—Continued

Modifier	Description	Volume adjustment	Time adjustment
52	Reduced Services	50%	50%.
53	Discontinued Procedure	50%	50%.
54	Intraoperative Care only	Preoperative + Intraoperative Percentages on the payment files used by Medicare contractors to process Medicare claims.	Preoperative + Intraoperative portion.
55	Postoperative Care only	Postoperative Percentage on the payment files used by Medicare contractors to process Medicare claims.	Postoperative portion.
62	Co-surgeons	62.5%	50%.
66	Team Surgeons	33%	33%.

We also make adjustments to volume and time that correspond to other payment rules, including special multiple procedure endoscopy rules and multiple procedure payment reductions (MPPRs). We note that section 1848(c)(2)(B)(v) of the Act exempts certain reduced payments for multiple imaging procedures and multiple therapy services from the BN calculation under section 1848(c)(2)(B)(ii)(II) of the Act. These MPPRs are not included in the development of the RVUs.

For anesthesia services, we do not apply adjustments to volume since the average allowed charge is used when simulating RVUs, and therefore, includes all adjustments. A time adjustment of 33 percent is made only for medical direction of two to four cases since that is the only situation where time units are duplicative.

- *Work RVUs:* The setup file contains the work RVUs from this proposed rule with comment period.

(6) Equipment Cost Per Minute

The equipment cost per minute is calculated as:

(1/(minutes per year * usage)) * price * ((interest rate/(1-(1/((1 + interest rate) − life of equipment)))) + maintenance)

Where:

minutes per year = maximum minutes per year if usage were continuous (that is, usage = 1); generally 150,000 minutes.
usage = variable, see discussion below.
price = price of the particular piece of equipment.
life of equipment = useful life of the particular piece of equipment.
maintenance = factor for maintenance; 0.05.
interest rate = variable, see discussion below.

Usage: We currently use an equipment utilization rate assumption of 50 percent for most equipment, with the exception of expensive diagnostic imaging equipment, for which we use a 90 percent assumption as required by Section 1848(b)(4)(C) of the Act.

Maintenance: This factor for maintenance was proposed and finalized during rulemaking for CY 1998 PFS (62 FR 33164). Several stakeholders have suggested that this maintenance factor assumption should be variable. We solicit comment regarding reliable data on maintenance costs that vary for particular equipment items.

Per-use Equipment Costs: Several stakeholders have also suggested that our PE methodology should incorporate usage fees and other per-use equipment costs as direct costs. We also solicit comment on adjusting our cost formula to include equipment costs that do not vary based on the equipment time.

Interest Rate: In the CY 2013 final rule with comment period (77 FR 68902), we updated the interest rates used in developing an equipment cost per minute calculation. The interest rate was based on the Small Business Administration (SBA) maximum interest rates for different categories of loan size (equipment cost) and maturity (useful life). The interest rates are listed in Table 3. (See 77 FR 68902 for a thorough discussion of this issue.)

TABLE 3—SBA MAXIMUM INTEREST RATES

Price	Useful life	Interest rate (percent)
<$25K	<7 Years	7.50
$25K to $50K	<7 Years	6.50
>$50K	<7 Years	5.50
<$25K	7+ Years	8.00
$25K to $50K	7+ Years	7.00
>$50K	7+ Years	6.00

TABLE 4—CALCULATION OF PE RVUS UNDER METHODOLOGY FOR SELECTED CODES

		Step	Source	Formula	99213 Office visit, est Non-facility	33533 CABG, arterial, single Facility	71020 Chest x-ray Non-facility	71020–TC Chest x-ray, Non-facility	71020–26 Chest x-ray, Non-facility	93000 ECG, complete, Non-facility	93005 ECG, tracing Non-facility
(1) Labor cost (Lab)	Step 1	AMA		13.32	77.52	5.74	5.74	0.00	5.10	5.10	0.00
(2) Supply cost (Sup)	Step 1	AMA		2.98	7.34	.53	.53	0.00	1.19	1.19	0.00
(3) Equipment cost (Eqp)	Step 1	AMA		0.17	0.58	6.92	6.92	0.00	0.09	0.09	0.00
(4) Direct cost (Dir)	Step 1		=(1)+(2)+(3)	16.48	85.45	13.19	13.19	0.00	6.38	6.38	0.00
(5) Direct adjustment (Dir. Adj.)	Steps 2–4	See footnote*		0.5898	0.5898	0.5898	0.5898	0.5898	0.5898	0.5898	0.5898
(6) Adjusted Labor	Steps 2–4	=Lab * Dir Adj	=(1)*(5)	7.86	45.72	3.39	3.39	0.00	3.01	3.01	0.00
(7) Adjusted Supplies	Steps 2–4	=Eqp * Dir Adj	=(2)*(5)	1.76	4.33	.31	.31	0.00	.70	.70	0.00
(8) Adjusted Equipment	Steps 2–4	=Sup * Dir Adj	=(3)*(5)	.10	0.34	4.08	4.08	0.00	0.05	0.05	0.00
(9) Adjusted Direct	Steps 2–4		=(6)+(7)+(8)	9.72	50.40	7.78	7.78	0.00	3.77	3.77	0.00
(10) Conversion Factor (CF)	Step 5	PFS		35.8228	35.8228	35.8228	35.8228	35.8228	35.8228	35.8228	35.8228
(11) Adj. labor cost converted	Step 5	=(Lab * Dir Adj)/CF	=(6)/(10)	0.22	1.28	0.09	0.09	0.00	0.08	0.08	0.00
(12) Adj. supply cost converted	Step 5	=(Sup * Dir Adj)/CF	=(7)/(10)	0.05	0.12	0.01	0.01	0.00	0.02	0.02	0.00
(13) Adj. equipment cost converted.	Step 5	=(Eqp * Dir Adj)/CF	=(8)/(10)	0.00	0.01	0.11	0.11	0.00	0.00	0.00	0.00
(14) Adj. direct cost converted	Step 5		=(11)+(12)+(13)	0.27	1.41	0.22	0.22	0.00	0.11	0.11	0.00
(15) Work RVU	Setup File	PFS		0.97	33.75	0.22	0.00	0.22	0.17	0.00	0.17
(16) Dir_pct	Steps 6,7	Surveys		0.25	0.17	0.29	0.29	.29	.29	.29	.29
(17) Ind_pct	Steps 6,7	Surveys		0.75	.83	.71	.71	.71	.71	.71	.71
(18) Ind. Alloc. Formula (1st part)	Step 8	See Step 8		((14)/(16))*(17)	((14)/(16))*(17)	((14)/(16))*(17)	((14)/(16))*(17)	((14)/(16))*(17)	((14)/(16))*(17)	((14)/(16))*(17)	((14)/(16))*(17)
(19) Ind. Alloc.(1st part)	Step 8		See 18	0.82	6.67	.53	.53	0	0.26	0.26	0
(20) Ind. Alloc. Formula (2nd part)	Step 8	See Step 8		(15)	(15)	(15+11)	(11)	(15)	(15+11)	(11)	(15)
(21) Ind. Alloc.(2nd part)	Step 8		See 20	0.97	33.75	0.31	0.09	0.22	0.25	0.08	0.17
(22) Indirect Allocator (1st + 2nd)	Step 8		=(19)+(21)	1.79	40.42	.84	.62	0.22	0.51	0.34	0.17

TABLE 4—CALCULATION OF PE RVUS UNDER METHODOLOGY FOR SELECTED CODES—Continued

		Step	Source	Formula	99213 Office visit, est Non-facility	33533 CABG, arterial, single Facility	71020 Chest x-ray Non-facility	71020–TC Chest x-ray, Non-facility	71020–26 Chest x-ray, Non-facility	93000 ECG, complete, Non-facility	93005 ECG, tracing Non-facility
(23) Indirect Adjustment (Ind. Adj.)	Steps 9–11.	See Footnote**	.....	.3813	.3813	.3813	.3813	.3813	.3813	.3813	.3813
(24) Adjusted Indirect Allocator	Steps 9–11.	=Ind Alloc * Ind Adj	.....	0.68	15.41	.32	.24	0.08	0.20	0.13	.06
(25) Ind. Practice Cost Index (IPCI).	Steps 12–16.	.....	.....	1.07	0.75	.99	.99	.99	0.91	0.91	0.91
(26) Adjusted Indirect	Step 17	= Adj.Ind Alloc * PCI	=(24)*(25)	0.73	11.59	.32	.24	0.08	0.18	0.12	0.06
(27) PE RVU	Step 18	=(Adj Dir + Adj Ind) * Other Adj.	=((14)+(26)) * Other Adj).	1.01	13.05	.53	.45	.08	.29	.23	0.06

* The direct adj = [current pe rvus * CF * avg dir pct]/[sum direct inputs] = [step2]/[step3].
** The indirect adj = [current pe rvus * avg ind pct]/[sum of ind allocators] = [step9]/[step10].
Note: The use of any particular conversion factor (CF) in this table to illustrate the PE calculation has no effect on the resulting RVUs.

3. Changes to Direct PE Inputs for Specific Services

In this section, we discuss other CY 2015 proposals and revisions related to direct PE inputs for specific services. The proposed direct PE inputs are included in the proposed rule CY 2015 direct PE input database, which is available on the CMS Web site under downloads for the CY 2015 PFS proposed rule at *http://www.cms.gov/Medicare/Medicare-Fee-for-Service-Payment/PhysicianFeeSched/PFS-Federal-Regulation-Notices.html*.

a. RUC Recommendation for Monitoring Time Following Moderate Sedation

We received a recommendation from the RUC regarding appropriate clinical labor minutes for post-procedure moderate sedation monitoring and post-procedure monitoring. The RUC recommended 15 minutes of RN time for one hour of monitoring following moderate sedation and 15 minutes of RN time per hour for post-procedure monitoring (unrelated to moderate sedation). For 17 procedures listed in Table 5, the recommended clinical labor minutes differed from the clinical labor minutes in the direct PE database. We propose to accept, without refinement, the RUC recommendation to adjust these clinical labor minutes as indicated in Table 5 as ''Change to Clinical Labor Time.'' The CY 2015 direct PE database reflects these proposed changes and is available on the CMS Web site under the supporting data files for the CY 2015 PFS proposed rule at *http://www.cms.gov/PhysicianFeeSched/*.

TABLE 5—CODES WITH PROPOSED CHANGES TO POST-PROCEDURE CLINICAL LABOR MONITORING TIME

CPT code	Current monitoring time (min)	RUC recommended total post-procedure monitoring time (min)	Change to clinical labor time (min)
32553	30	60	30
35471	21	60	39
35475	60	30	−30
35476	60	30	−30
36147	18	30	12
37191	60	30	−30
47525	6	15	9
49411	30	60	30
50593	30	60	30
50200	15	60	45
31625	20	15	−5
31626	25	15	−10
31628	25	15	−10
31629	25	15	−10
31634	25	15	−10
31645	10	15	5
31646	10	15	5

b. RUC Recommendation for Standard Moderate Sedation Package

We received a RUC recommendation to modify PE inputs included in the standard moderate sedation package. Specifically, the RUC indicated that several specialty societies have pointed to the need for a stretcher during procedures for which moderate sedation is inherent in the procedure. Although the RUC did not recommend that we make changes to PE inputs for codes at this time, the RUC indicated that its future recommendations would include the stretcher as a direct input for procedures including moderate sedation.

The RUC recommended three scenarios that future recommendations would use to allocate the equipment time for the stretcher based on the procedure time and whether the stretcher would be available for other patients to use during a portion of the procedure. Although we appreciate the RUC's attention to the differences in the time required for the stretcher based on the time for the procedure, we believe that one of the purposes of standard PE input packages is to reduce the complexity associated with assigning appropriate PE inputs to individual procedures while, at the same time, maintaining relativity between procedures. Since we generally allocate inexpensive equipment items to the

entire service period when they are likely to be unavailable for another use during the full service period, we believe it is preferable to treat the stretcher consistently across these services. Therefore, we propose to modify the standard moderate sedation input package to include a stretcher for the same length of time as the other equipment items in the moderate sedation package. The proposed revised moderate sedation input package would be applied to relevant codes as we review them through future notice and comment rulemaking. It would be useful to hear stakeholders' views and the reasoning behind them on this issue, especially from those who think that the stretcher, as expressed through the allocation of equipment minutes, should be allocated with more granularity than the equipment costs that are allocated to other similar items.

c. RUC Recommendation for Migration From Film to Digital Practice Expense Inputs

The RUC has provided a recommendation regarding the PE inputs for digital imaging services. Specifically, the RUC recommended that we remove a list of supply and equipment items associated with film technology since these items are no longer a typical resource input; these items are detailed in Table 6. The RUC also recommended that the Picture Archiving and Communication System (PACS) equipment be included for these imaging services since these items are now typically used in furnishing imaging services. We received a description of the PACS system as part of the recommendation, which included both items that appear to be direct PE items and items for which indirect PE RVUs are allocated in the PE methodology. As we have previously indicated, items that are not clinical labor, medical supplies, or medical equipment, or are not individually allocable to a particular patient for a particular procedure, are not categorized as direct costs in the PE methodology. Since we did not receive any invoices for the PACS system, we are unable to determine the appropriate pricing to use for the inputs. We propose to accept the RUC recommendation to remove the film supply and equipment items, and to allocate minutes for a desktop computer (ED021) as a proxy for the PACS workstation as a direct expense. Specifically, for the 31 services that already contain ED021, we propose to retain the time that is currently included in the direct PE input database. For the remaining services that are valued in the nonfacility setting, we propose to allocate the full clinical labor intraservice time to ED021, except when there is no clinical labor, in which case we propose to allocate the intraservice work time to ED021. For services valued only in the facility setting, we propose to allocate the post-service clinical labor time to ED021, since the film supply and/or equipment inputs were previously associated with the post-service period.

TABLE 6—RUC-RECOMMENDED SUPPLY AND EQUIPMENT ITEMS PROPOSED TO BE REMOVED FOR DIGITAL IMAGING SERVICES

CMS code	Description
SK013	computer media, dvd.
SK014	computer media, floppy disk 1.44mb.
SK015	computer media, optical disk 128mb.
SK016	computer media, optical disk 2.6gb.
SK022	film, 8inx10in (ultrasound, MRI).
SK025	film, dry, radiographic, 8in x 10in.
SK028	film, fluoroscopic 14 x 17.
SK033	film, x-ray 10in x 12in.
SK034	film, x-ray 14in x 17in.
SK035	film, x-ray 14in x 36in.
SK037	film, x-ray 8in x 10in.
SK038	film, x-ray 8in x 10in (X-omat, Radiomat).
SK086	video tape, VHS.
SK089	x-ray developer solution.
SK090	x-ray digitalization separator sheet.
SK091	x-ray envelope.
SK092	x-ray fixer solution.
SK093	x-ray ID card (flashcard).
SK094	x-ray marking pencil.
SK098	film, x-ray, laser print.
SM009	cleaner, x-ray cassette-screen.
ED014	computer workstation, 3D reconstruction CT–MR.
ED016	computer workstation, MRA post processing.
ED023	film processor, PET imaging.
ED024	film processor, dry, laser.
ED025	film processor, wet.
ED027	film processor, x-omat (M6B).
ER018	densitometer, film.
ER029	film alternator (motorized film viewbox).
ER067	x-ray view box, 4 panel.

We note that the RUC exempted certain procedures from its recommendation because (a) the dominant specialty indicated that digital technology is not yet typical or (b) the procedure only contained a single input associated with film technology, and it was determined that the sharing of images, but not actual imaging, may be involved in the service. However, we do not believe that the most appropriate approach in establishing relative values for services that involve imaging is to exempt services from the transition from film to digital PE inputs based on information reported by individual specialties. Although we understand that the migration from film technology to digital technology may progress at different paces for particular specialties, we do not have information to suggest that the migration is not occurring for all procedures that require the storage of images. Just as it was appropriate to use film inputs as a proxy for some services for which digital inputs were typical pending these proposed changes in the direct PE input database, we believe it is appropriate to use digital inputs as a proxy for the services that may still use film, pending their migration to digital technology. In addition, since the RUC conducted its collection of information from the specialties over several years, we believe the migration process from film to digital inputs has likely continued over the time period during which the information was gathered, and that the digital PE inputs will reflect typical use of technology for most if not all of these services before the proposed change to digital inputs would take effect beginning January 1, 2015. We also believe that for the sake of relativity, we should remove the equipment and supply inputs noted below from all procedures in the direct PE database, including those listed in Table 7. We seek comment on whether the computer workstation, which we propose to use as a proxy for the PACS workstation, is the appropriate input for the services listed in Table 7, or whether an alternative input is a more appropriate reflection of direct PE costs.

TABLE 7—CODES CONTAINING FILM INPUTS BUT EXCLUDED FROM THE RUC RECOMMENDATION

HCPCS	Short descriptor
21077	Prepare face/oral prosthesis.
28293	Correction of bunion.
61580	Craniofacial approach skull.
61581	Craniofacial approach skull.
61582	Craniofacial approach skull.
61583	Craniofacial approach skull.
61584	Orbitocranial approach/skull.
61585	Orbitocranial approach/skull.
61586	Resect nasopharynx skull.
64517	N block inj hypogas plxs.
64681	Injection treatment of nerve.
70310	X-ray exam of teeth.
77326	Brachytx isodose calc simp.
77327	Brachytx isodose calc interm.
77328	Brachytx isodose plan compl.
91010	Esophagus motility study.
91020	Gastric motility studies.
91034	Gastroesophageal reflux test.
91035	G-esoph reflx tst w/electrod.
91037	Esoph imped function test.
91038	Esoph imped funct test > 1hr.
91040	Esoph balloon distension tst.

TABLE 7—CODES CONTAINING FILM INPUTS BUT EXCLUDED FROM THE RUC RECOMMENDATION—Continued

HCPCS	Short descriptor
91120	Rectal sensation test.
91122	Anal pressure record.
91132	Electrogastrography.
91133	Electrogastrography w/test.
92521	Evaluation of speech fluency.
92523	Speech sound lang comprehend.
92524	Behavioral qualit analys voice.
92601	Cochlear implt f/up exam <7.
92603	Cochlear implt f/up exam 7/>.
92611	Motion fluoroscopy/swallow.
92612	Endoscopy swallow tst (fees).
92614	Laryngoscopic sensory test.
92616	Fees w/laryngeal sense test.
95800	Slp stdy unattended.
95801	Slp stdy unatnd w/anal.
95803	Actigraphy testing.
95805	Multiple sleep latency test.
95806	Sleep study unatt&resp efft.
95807	Sleep study attended.
95808	Polysom any age 1–3> param.
95810	Polysom 6/> yrs 4/> param.
95811	Polysom 6/>yrs cpap 4/> parm.
95812	Eeg 41–60 minutes.
95813	Eeg over 1 hour.
95829	Surgery electrocorticogram.
95950	Ambulatory eeg monitoring.
95953	Eeg monitoring/computer.
95954	Eeg monitoring/giving drugs.
95955	Eeg during surgery.
95956	Eeg monitor technol attended.
95957	Eeg digital analysis.
96904	Whole body photography.
G0270	Mnt subs tx for change dx.
G0271	Group mnt 2 or more 30 mins.

Finally, we note that the RUC recommendation also indicated that given the labor-intensive nature of reviewing all clinical labor tasks associated with film technology, these times would be addressed as these codes are reviewed. We agree with the RUC that reviewing and adjusting the times for each code would be difficult and labor-intensive since the direct PE input database does not allow for a comprehensive adjustment of the clinical labor time based on changes in particular clinical labor tasks. To make broad adjustments such as this across codes, the PE database would need to contain the time associated with individual clinical labor tasks rather than reflecting only the sum of times for the pre-service period, service period, and post-service period, as it does now. We recognize this situation presents a challenge in implementing RUC recommendations such as this one, and makes it difficult to understand the basis of both the RUC's recommended clinical labor times and our refinements of those recommendations. Therefore, we are considering revising the direct PE input database to include task-level clinical labor time information for every code in the database. As an example, we refer readers to the supporting data files for the direct PE inputs, which include public use files that display clinical labor times as allocated to each individual clinical labor task for a sample of procedures. We are displaying this information as we attempt to increase the transparency of the direct PE database. We hope that this modification could enable us to more accurately allocate equipment minutes to clinical labor tasks in a more consistent and efficient manner. Given the number of procedures and the volume of information involved, we are seeking comments on the feasibility of this approach. We note that we are not proposing to make any changes to PE inputs for CY 2015 based on this proposed modification to the design of the direct PE input database.

The CY 2015 direct PE database reflects these proposed changes and is available on the CMS Web site under the supporting data files for the CY 2015 PFS proposed rule at *http://www.cms.gov/PhysicianFeeSched/*.

d. Inputs for Digital Mammography Services

Mammography services are currently reported by and paid for using both CPT codes and G-codes. To meet the requirements of the Medicare, Medicaid, and SCHIP Benefits Improvement and Protection Act of 2000 (BIPA), we established the G-codes for CY 2002 to pay for mammography services using new digital technologies (G0202 screening mammography digital; G0204 diagnostic mammography digital; G0206 diagnostic mammography digital). We continued to pay for mammography billed using the CPT codes when the services were furnished with film technology (77055 mammogram one breast; 77056 mammogram both breasts; 77057 mammogram screening). As we discussed previously in this section, the RUC has recommended that all imaging codes, including mammography, be valued using digital rather than film inputs because film is no longer typical. A review of Medicare claims data shows that the mammography CPT codes are billed extremely infrequently, and that the G-codes are billed for the vast majority of mammography claims, confirming what the RUC has indicated regarding the use of digital technology. It appears that the typical mammography service is furnished using digital technology. As such, we do not believe there is a reason to continue the separate use of the CPT codes and the G-codes for mammography services since both sets of codes would have the same values when priced based upon the typical digital technology. Accordingly, we are proposing to delete the mammography G-codes beginning for CY 2015 and to pay all mammography using the CPT codes.

Although we believe that the CPT codes should now be used to report all mammography services, we have concerns about whether the current values for the CPT codes accurately reflect the resource inputs associated with furnishing the services. Because the CPT codes have not been recently reviewed and significant technological changes have occurred during this time, we do not believe it would be appropriate to retain the current values for the CPT codes. Therefore, we are proposing to value the CPT codes using the RVUs previously established for the G-codes. We believe these values would be most appropriate since they were established to reflect the use of digital technology, which is now typical.

As discussed in section II.B.3.b.(4) of this proposed rule, we are proposing these CPT codes as potentially misvalued and requesting that the RUC and other interested stakeholders review these services in terms of appropriate work RVUs, work time assumptions and direct PE inputs.

e. Radiation Treatment Vault

In previous rulemaking (77 FR 68922; 78 FR 74346), we indicated that we included the radiation treatment vault as a direct PE input for several recently reviewed radiation treatment codes for the sake of consistency with its previous inclusion as a direct PE input for some other radiation treatment services, but that we intended to review the radiation treatment vault input and address whether or not it should be included in the direct PE input database for all services in future rulemaking. Specifically, we questioned whether it was consistent with the principles underlying the PE methodology to include the radiation treatment vault as a direct cost given that it appears to be more similar to building infrastructure costs than to medical equipment costs. Moreover, it is difficult to distinguish the cost of the vault from the cost of the building. In response to this action, we received comments and invoices from stakeholders who indicated that the vault should be classified as a direct cost. However, upon review of the information received, we believe that the specific structural components required to house the linear accelerator are similar in concept to components required to house other medical equipment such as expensive imaging

equipment. In general, the electrical, plumbing, and other building specifications are often unique to the intended functionality of a given building, including costs that are attributable to the specific medical equipment housed in the building, but do not represent direct medical equipment costs in our established PE methodology. Therefore we believe that the special building requirements indicated for the radiation treatment vault to house a linear accelerator do not represent a direct cost in our PE methodology, and that the vault construction is instead accounted for in the indirect PE methodology, just as the building and infrastructure costs are treated for other PFS services including those with infrastructure costs based on equipment needs Therefore, we propose to remove the radiation treatment vault as a direct PE input from the radiation treatment procedures listed in Table 8, because we believe that the vault is not, itself, medical equipment, and therefore, is accounted for in the indirect PE methodology.

TABLE 8—HCPCS CODES AFFECTED BY PROPOSED REMOVAL OF RADIATION TREATMENT VAULT

HCPCS	Short descriptor
77373	Sbrt delivery.
77402	Radiation treatment delivery.
77403	Radiation treatment delivery.
77404	Radiation treatment delivery.
77406	Radiation treatment delivery.
77407	Radiation treatment delivery.
77408	Radiation treatment delivery.
77409	Radiation treatment delivery.
77411	Radiation treatment delivery.
77412	Radiation treatment delivery.
77413	Radiation treatment delivery.
77414	Radiation treatment delivery.
77416	Radiation treatment delivery.
77418	Radiation tx delivery imrt.

f. Clinical Labor Input Errors

Subsequent to the publication of the CY 2014 PFS final rule with comment period, it came to our attention that, due to a clerical error, the clinical labor type for CPT code 77293 (Respiratory Motion Management Simulation (list separately in addition to code for primary procedure)) was entered as L052A (Audiologist) instead of L152A (Medical Physicist), which has a higher cost per minute. We are proposing a correction to the clinical labor type for this service.

In conducting a routine data review of the database, we also discovered that, due to a clerical error, the RN time allocated to CPT codes 33620 (Apply r&l pulm art bands), 33621 (Transthor cath for stent), and 33622 (Redo compl cardiac anomaly) was entered in the nonfacility setting, rather than in the facility setting where the code is valued. When a service is not valued in a particular setting, any inputs included in that setting are not included in the calculation of the PE RVUs for that service. Therefore, we are proposing to move the RN time allocated to these procedures to the facility setting. The PE RVUs listed in Addendum B reflect these technical corrections.

g. Work Time

Subsequent to the publication of the CY PFS 2014 final rule with comment period, several inconsistencies in the work time file came to our attention. First, for some services, the total work time, which is used in our PE methodology, did not equal the sum of the component parts (pre-service, intra-service, post-service, and times associated with global period visits). The times in the CY 2015 work time file reflect our proposed corrected values for total work time. Second, for a subset of services, the values in the pre-positioning time, pre-evaluation time, and pre-scrub-dress-wait time, were inadvertently transposed. We note that this error had no impact on calculation of the total times, but has been corrected in the CY 2015 work time file. Third, minor discrepancies for a series of interim final codes were identified between the work time file and the way we addressed these codes in the preamble text. Therefore, we have made adjustments to the work time file to reflect the decisions indicated in the preamble text. The work time file is available on the CMS Web site under the supporting data files for the CY 2015 PFS proposed rule at *http://www.cms.gov/PhysicianFeeSched/*. Note that for comparison purposes, the CY 2014 work time file is located at *http://www.cms.gov/Medicare/Medicare-Fee-for-Service-Payment/PhysicianFeeSched/PFS-Federal-Regulation-Notices-Items/CMS-1600-FC.html*.

h. Updates to Price for Existing Direct Inputs.

In the CY 2011 PFS final rule with comment period (75 FR 73205), we finalized a process to act on public requests to update equipment and supply price and equipment useful life inputs through annual rulemaking beginning with the CY 2012 PFS proposed rule. During 2013, we received a request to update the price of SD216 (catheter, balloon, esophageal or rectal (graded distention test)) from $217 to $237.50. We also received a request to update the price of SL196 (kit, HER–2/neu DNA Probe) from $105 to $144.50. We received invoices that documented updated pricing for each of these supply items. We propose to increase the price associated with these supply items.

We continue to believe it is important to maintain a periodic and transparent process to update the price of items to reflect typical market prices in our ratesetting methodology, and we continue to study the best way to improve our current process. We remind stakeholders that we have previously stated our difficulty in obtaining accurate pricing information. We have also made clear that the goal of the current transparent process is to offer the opportunity for the community to both request supply price updates by providing us copies of paid invoices, and to object to proposed changes in price inputs for particular items by providing additional information about prices available to the practitioner community. We remind stakeholders that PFS payment rates are developed within a budget neutral, relative value system, and any increases in price inputs for particular supply items result in corresponding decreases to the relative values of all other direct PE inputs.

We note that we continue to have difficulty determining the best way to use the invoices that we receive. In all cases, we attempt to use the price that appears most representative, but it can be difficult to ascertain whether the prices on particular invoices are typical. For example, in some cases, we receive multiple invoices, but are only able to use one of them because the other invoices include additional items and do not separately identify the price of the item in question. In other cases, we receive multiple invoices at one price, which suggests that this price is likely a typical one. In other cases, we receive invoices for items already in the direct PE database that are based on a recent invoice. In these cases, it is not clear whether the new, usually higher priced, invoice reflects a more accurate price than the current price, but we need to determine whether to substitute the new price for the existing price, maintain the existing price, or average the two prices. We continue to seek stakeholder input on the best approach to using the small sample of invoices that are provided to us through this process.

We also received a RUC recommendation to update the prices associated with two supply items. Specifically, the RUC recommended that we increase the price of SA042 (pack, cleaning and disinfecting, endoscope) from $15.52 to $17.06 to reflect the addition of supply item SJ009 (basin, irrigation) to the pack, and increase the price of SA019 (kit, IV

starter) from $1.37 to $1.60 to reflect the addition of supply item SA044 (underpad 2 ft. x 3 ft. (Chux)) to the kit. We are proposing to update the prices for both of these items based on these recommendations. The CY 2015 direct PE database reflects these proposed changes and is available on the CMS Web site under the supporting data files for the CY 2015 PFS proposed rule at *http://www.cms.gov/PhysicianFeeSched/*.

i. New Standard Supply Package for Contrast Imaging

The RUC recommended creating a new direct PE input standard supply package ''Imaging w/contrast, standard package'' for contrast enhanced imaging, with a price of $6.82. This price reflects the combined prices of the medical supplies included in the package; these items are listed in Table 9. We propose to accept this recommendation, but seek comment on whether all of the items included in the package are used in the typical case. The CY 2015 direct PE database reflects this proposed change and is available on the CMS Web site under the supporting data files for the CY 2015 PFS proposed rule at *http://www.cms.gov/PhysicianFeeSched/*.

TABLE 9—STANDARD CONTRAST IMAGING SUPPLY PACKAGE

Medical supply description	CMS supply code	Unit	Quantity	Price
Imaging w/Contrast—Standard Package				
Kit, IV starter	SA019	Kit	1	$1.368
Gloves, non-sterile	SB022	Pair	1	0.084
Angiocatheter 14g–24g	SC001	Item	1	1.505
Heparin lock	SC012	Item	1	0.917
IV tubing (extension)	SC019	Foot	*3	1.590
Needle, 18–27g	SC029	Item	1	0.089
Syringe 20ml	SC053	Item	1	0.558
Sodium chloride 0.9% inj. bacteriostatic (30ml uou).	SH068	Item	1	0.700
Swab-pad, alcohol	SJ053	Item	1	0.013
TOTAL				6.824

*The price for SC019 (IV tubing, (extension)) is $0.53 per foot.

j. Direct PE Inputs for Stereotactic Radiosurgery (SRS) Services (CPT Codes 77372 and 77373)

In the CY 2014 PFS final rule with comment period (78 FR 74245), we summarized comments received about whether CPT codes 77372 and 77373 would accurately reflect the resources used in furnishing the typical SRS delivery if there were no coding distinction between robotic and non-robotic delivery methods. Until now, SRS services furnished using robotic methods were billed using contractor-priced G-codes G0339 (Image-guided robotic linear accelerator based stereotactic radiosurgery, complete course of therapy in one session or first session of fractionated treatment), and G0340 (Image-guided robotic linear accelerator-based stereotactic radiosurgery, delivery including collimator changes and custom plugging, fractionated treatment, all lesions, per session, second through fifth sessions, maximum five sessions per course of treatment). We indicated that we would consider these codes in future rulemaking.

Most commenters suggested that the CPT codes accurately described both services, and the RUC stated that the direct PE inputs for the CPT codes accurately accounted for the resource costs of the described services. One commenter objected to the deletion of the G-codes but did not include any information to suggest that the CPT codes did not describe the services or that the direct PE inputs for the CPT codes were inaccurate. Based on a review of the comments received, we have no indication that the direct PE inputs included in the CPT codes do not reflect the typical resource inputs involved in furnishing an SRS service. Therefore, we propose to recognize only the CPT codes for payment of SRS services, and to delete the G-codes used to report robotic delivery of SRS.

k. Inclusion of Capnograph for Pediatric Polysomnography Services

We are proposing to include equipment item EQ358, Sleep capnograph, polysomnography (pediatric), for CPT codes 95782 (Polysomnography; younger than 6 years, sleep staging with 4 or more additional parameters of sleep, attended by a technologist) and 95783 (Polysomnography; younger than 6 years, sleep staging with 4 or more additional parameters of sleep, with initiation of continuous positive airway pressure therapy or bi-level ventilation, attended by a technologist). We understand that capnography is a required element of sleep studies for patients younger than 6 years, and propose to allocate this equipment item to 95782 for 602 minutes, and 95783 for 647 minutes. Based on the invoice we received for this equipment item, we propose to price EQ358 at $4,534.23.

l. Nonfacility Direct PE Inputs for Intravascular Ultrasound

A stakeholder requested that we establish nonfacility PE RVUs for CPT code 37250 (Intravascular ultrasound (non-coronary vessel) during diagnostic evaluation and/or therapeutic intervention; each additional vessel (List separately in addition to code for primary procedure)) and 37251 (Intravascular ultrasound (non-coronary vessel) during diagnostic evaluation and/or therapeutic intervention; each additional vessel (List separately in addition to code for primary procedure)). We seek comment regarding whether it is appropriate to have nonfacility PE RVUs for this code and if so what inputs should assigned to this code.

4. Using OPPS and ASC Rates in Developing PE RVUs

Accurate and reliable pricing information for both individual items and indirect PEs is critical to establish accurate PE RVUs for PFS services. As we have addressed in previous rulemaking, we have serious concerns regarding the accuracy of some of the information we use in developing PE RVUs. In particular, we have several longstanding concerns regarding the accuracy of direct PE inputs, including

both items and procedure time assumptions, and prices of individual supplies and equipment (78 FR 74248–74250). In addition to the concerns regarding the inputs used in valuing particular procedures, we also note that the allocation of indirect PE is based on information collected several years ago (as described above) and will likely need to be updated in the coming years. To mitigate the impact of some of these potentially problematic data used in developing values for individual services, in CY 2014 rulemaking we proposed to limit the nonfacility PE RVUs for individual codes so that the total nonfacility PFS payment amount would not exceed the total combined amount that Medicare would pay for the same code in the facility setting. In developing the proposal, we sought a reliable means for Medicare to set upper payment limits for office-based procedures and believed OPPS and ASC payment rates would provide an appropriate comparison because these rates are based on relatively more reliable cost information in settings with cost structures that generally would be expected to be higher than in the office setting.

We received many comments regarding our proposal, the vast majority of which urged us to withdraw the proposal. Some commenters questioned the validity of our assumption that facilities' costs for providing all services are necessarily higher than the costs of physician offices or other nonfacility settings. Other commenters expressed serious concerns with the asymmetrical comparisons between PFS payment amounts and OPPS/ASC payment amounts. Finally, many commenters suggested revisions to technical aspects of our proposed policy.

In considering all the comments, however, we were persuaded that the comparison of OPPS (or ASC) payment amounts to PFS payment amounts for particular procedures is not the most appropriate or effective approach to ensuring that that PFS payment rates are based on accurate cost assumptions. Commenters noted several flaws with the approach. First, unlike PFS payments, OPPS and ASC payments for individual services are grouped into rates that reflect the costs of a range of services. Second, commenters suggested that since the ASC rates reflect the OPPS relative weights to determine payment rates under the ASC payment system, and are not based on cost information collected from ASCs, the ASC rates should not be used in the proposed policy. For these and other reasons raised by commenters, we are not proposing a similar policy for the CY 2015 PFS. If we consider using OPPS or ASC payment rates in developing PFS PE RVUs in future rulemaking, we would consider all of the comments received regarding the technical application of the previous proposal.

After thorough consideration of the comments regarding the CY 2014 proposal, we continue to believe that there are a various possibilities for leveraging the use of available hospital cost data in the PE RVU methodology to ensure that the relative costs for PFS services are developed using data that is auditable and comprehensively and regularly updated. Although some commenters questioned the premise that the hospital cost data are more accurate than the information used to establish PE RVUs, we continue to believe that the routinely updated, auditable resource cost information submitted contemporaneously by a wide array of providers across the country is a valid reflection of ''relative'' resources and could be useful to supplement the resource cost information developed under our current methodology based upon a typical case that are developed with information from a small number of representative practitioners for a small percentage of codes in any particular year.

Section 220(a) of the PAMA added a new subparagraph (M) under section 1848(c)(2) of the Act that gives us authority to collect information on resources used to furnish services from eligible professionals (including physicians, non-physician practitioners, PTs, OTs, SLPs and qualified audiologists), and other sources. It also authorizes us to pay eligible professionals for submitting solicited information. We will be exploring ways of collecting better and updated resource data from physician practices, including those that are provider-based, and other non-facility entities paid through the PFS. We believe such efforts will be challenging given the wide variety of practices, and that any effort will likely impose some burden on eligible professionals paid through the PFS regardless of the scope and manner of data collection. Currently, through one of the validation contracts discussed in section II.B. of this proposed rule, we have been gathering time data directly from physician practices. Through this project, we have learned much about the challenges for both CMS and the eligible professionals of collecting data directly from practices. Our experience has also shown that is difficult to obtain invoices for supply and equipment items that we can use in pricing direct PE inputs. Many specialty societies also have noted the challenges in obtaining recent invoices for medical supplies and equipment (78 FR 74249). Further, PE calculations also rely heavily on information from the Physician Practice Expense Information Survey (PPIS) survey, which, as discussed earlier, was conducted in 2007 and 2008. When we implemented the results of the survey, many in the community expressed serious concerns over the accuracy of this or other PE surveys as a way of gathering data on PE inputs from the diversity of providers paid under the PFS.

Section 220 of the PAMA also provides authority to use alternative approaches to establish practice expense relative values, including the use of data from other suppliers and providers of services. We are exploring the best approaches for exercising this authority, including with respect to use of hospital outpatient cost data. We understand that many stakeholders will have concerns regarding the possibility of using hospital outpatient cost data in developing PFS PE RVUs, and we want to be sure we are aware of these prior to considering or developing any future proposal relying on those data. Therefore, we are seeking comment on the possible uses of the Medicare hospital outpatient cost data (not the APC payment amount) in potential revisions of the PFS PE methodology. This could be as a means to validate or, perhaps, in setting the relative resource cost assumptions within the PFS PE methodology. We note that the resulting PFS payment amounts would not necessarily conform to OPPS payment amounts since OPPS payments are grouped into APCs, while PFS payments would continue to be valued individually and would remain subject to the relativity inherent in establishing PE RVUs, budget neutrality adjustments, and PFS updates. We are particularly interested in comments that compare such possibilities to other broad-based, auditable, mechanisms for data collection, including any we might consider under the authority provided under section 220(a) of the PAMA. We urge commenters to consider a wide range of options for gathering and using the data, including using the data to validate or set resource assumptions for only a subset of PFS services, or as a base amount to be adjusted by code or specialty-level recommended adjustments, or other potential uses.

In addition to soliciting comments as noted above, we continue to seek a better understanding regarding the growing trend toward hospital acquisition of physician offices and

subsequent treatment of those locations as off-campus provider-based outpatient departments affects payments under PFS and beneficiary cost-sharing. MedPAC continues to question the appropriateness of increased Medicare payment and beneficiary cost-sharing when physician offices become hospital outpatient departments, and to recommend that Medicare pay selected hospital outpatient services at PFS rates (MedPAC March 2012 and June 2013 *Report to Congress*). We also remain concerned about the validity of the resource data as more physician practices become provider-based. Our survey data reflects the PE costs for particular PFS specialties, including a proportion of practices that may have become provider-based since the survey was conducted. Additionally, as the proportion of provider-based offices varies among physician specialties, so does the relative accuracy of the PE survey data. Our current PE methodology primarily distinguishes between the resources involved in furnishing services in two sites of service: The non-facility setting and the facility setting. In principle, when services are furnished in the non-facility setting, the costs associated with furnishing services include all direct and indirect PEs associated with the work and the PE of the service. In contrast, when services are furnished in the facility setting, some costs that would be PEs in the office setting are incurred by the facility. Medicare makes a separate payment to the facility to account for some portion of these costs, and we adjust PEs accordingly under the PFS. As more physician practices become hospital-based, it is difficult to know which PE costs typically are actually incurred by the physician, which are incurred by the hospital, and whether our bifurcated site-of service differential adequately accounts for the typical resource costs given these relationships. We also have addressed this issue as it relates to accurate valuation of visits within the post-operative period of 10- and 90-day global codes in section II.B.4 of this proposed rule.

To understand how this trend is affecting Medicare, including the accuracy of payments made through the PFS, we need to develop data to assess the extent to which this shift toward hospital-based physician practices is occurring. To that end, during CY 2014 rulemaking we sought comment regarding the best method for collecting information that would allow us to analyze the frequency, type, and payment for services furnished in off-campus provider-based hospital departments (73 FR 43302). We received many thoughtful comments. However, the commenters did not present a consensus opinion regarding the options we presented in last year's rule. Based on our analysis of the comments, we believe the most efficient and equitable means of gathering this important information across two different payment systems would be to create a HCPCS modifier to be reported with every code for physician and hospital services furnished in an off-campus provider-based department of a hospital. The modifier would be reported on both the CMS–1500 claim form for physicians' services and the UB–04 (CMS form 1450) for hospital outpatient claims. (We note that the requirements for a determination that a facility or an organization has provider-based status are specified in § 413.65 and we define a hospital campus to be the physical area immediately adjacent to the provider's main buildings, other areas and structures that are not strictly contiguous to the main buildings but are located within 250 yards of the main buildings, and any other areas determined on an individual case basis, by the CMS regional office.)

Therefore, we are proposing to collect this information on the type and frequency of services furnished in off-campus provider-based departments in accordance with our authority under section 1834(c)(2)(M) of the Act (as added by section 220(a) of the PAMA) beginning January 1, 2015. The collection of this information would allow us to begin to assess the accuracy of the PE data, including both the service-level direct PE inputs and the specialty-level indirect PE information that we currently use to value PFS services. Furthermore, this information would be critical in order to develop proposed improvements to our PE data or methodology that would appropriately account for the different resource costs among traditional office, facility, and off-campus provider-based settings. We are seeking additional comment on whether a code modifier is the best mechanism for collecting this service-level information.

B. Potentially Misvalued Services Under the Physician Fee Schedule

1. Valuing Services Under the PFS

Section 1848(c) of the Act requires the Secretary to determine relative values for physicians' services based on three components: Work; PE; and MP. Section 1848(c)(1)(A) of the Act defines the work component to include ''the portion of the resources used in furnishing the service that reflects work time and intensity in furnishing the service.'' In addition, section 1848(c)(2)(C)(i) of the Act specifies that ''the Secretary shall determine a number of work relative value units (RVUs) for the service based on the relative resources incorporating physician time and intensity required in furnishing the service.''

Section 1848(c)(1)(B) of the Act defines the PE component as ''the portion of the resources used in furnishing the service that reflects the general categories of expenses (such as office rent and wages of personnel, but excluding malpractice expenses) comprising practice expenses.'' Section 1848 (c)(2)(C)(ii) of the Act requires that PE RVUs be determined based upon the relative PE resources involved in furnishing the service. (See section II.A. of this proposed rule for more detail on the PE component.)

Section 1848(c)(1)(C) of the Act defines the MP component as ''the portion of the resources used in furnishing the service that reflects malpractice expenses in furnishing the service.'' Section 1848 (c)(2)(C)(iii) of the Act specifies that MP expense RVUs shall be determined based on the relative MP expense resources involved in furnishing the service. (See section II.C. of this proposed rule for more detail on the MP component.)

2. Identifying, Reviewing, and Validating the RVUs of Potentially Misvalued Services

a. Background

Section 1848(c)(2)(B) of the Act directs the Secretary to conduct a periodic review, not less often than every 5 years, of the RVUs established under the PFS. Section 1848(c)(2)(K) of the Act requires the Secretary to periodically identify potentially misvalued services using certain criteria and to review and make appropriate adjustments to the relative values for those services. Section 1848(c)(2)(L) to the Act also requires the Secretary to develop a process to validate the RVUs of certain potentially misvalued codes under the PFS, using the same criteria used to identify potentially misvalued codes, and to make appropriate adjustments.

As discussed in section I.B. of this proposed rule, each year we develop appropriate adjustments to the RVUs taking into account recommendations provided by the American Medical Association/Specialty Society Relative Value Scale Update Committee (RUC), MedPAC, and others. For many years, the RUC has provided us with recommendations on the appropriate

relative values for new, revised, and potentially misvalued PFS services. We review these recommendations on a code-by-code basis and consider these recommendations in conjunction with analyses of other data, such as claims data, to inform the decision-making process as authorized by the law. We may also consider analyses of work time, work RVUs, or direct PE inputs using other data sources, such as Department of Veteran Affairs (VA), National Surgical Quality Improvement Program (NSQIP), the Society for Thoracic Surgeons (STS), and the Physician Quality Reporting Initiative (PQRI) databases. In addition to considering the most recently available data, we also assess the results of physician surveys and specialty recommendations submitted to us by the RUC. We also consider information provided by other stakeholders. We conduct a review to assess the appropriate RVUs in the context of contemporary medical practice. We note that section 1848(c)(2)(A)(ii) of the Act authorizes the use of extrapolation and other techniques to determine the RVUs for physicians' services for which specific data are not available in addition to taking into account the results of consultations with organizations representing physicians. In accordance with section 1848(c) of the Act, we determine and make appropriate adjustments to the RVUs.

In its March 2006 Report to the Congress, MedPAC discussed the importance of appropriately valuing physicians' services, noting that ''misvalued services can distort the price signals for physicians' services as well as for other health care services that physicians order, such as hospital services.'' In that same report MedPAC postulated that physicians' services under the PFS can become misvalued over time. MedPAC stated, ''When a new service is added to the PFS, it may be assigned a relatively high value because of the time, technical skill, and psychological stress that are often required to furnish that service. Over time, the work required for certain services would be expected to decline as physicians become more familiar with the service and more efficient in furnishing it.'' We believe services can also become overvalued when PE declines. This can happen when the costs of equipment and supplies fall, or when equipment is used more frequently than is estimated in the PE methodology, reducing its cost per use. Likewise, services can become undervalued when physician work increases or PE rises.

As MedPAC noted in its March 2009 Report to Congress, in the intervening years since MedPAC made the initial recommendations, ''CMS and the RUC have taken several steps to improve the review process.'' Also, since that time Congress added section 1848(c)(2)(K)(ii) to the Act, which augments our efforts. It directs the Secretary to specifically examine, as determined appropriate, potentially misvalued services in the following seven categories:

- Codes and families of codes for which there has been the fastest growth;
- Codes and families of codes that have experienced substantial changes in PEs;
- Codes that are recently established for new technologies or services;
- Multiple codes that are frequently billed in conjunction with furnishing a single service;
- Codes with low relative values, particularly those that are often billed multiple times for a single treatment;
- Codes which have not been subject to review since the implementation of the RBRVS (the so-called 'Harvard-valued codes'); and
- Other codes determined to be appropriate by the Secretary.

Section 220(c) of the PAMA further expanded the categories of codes that the Secretary is directed to examine by adding nine additional categories. These are:

- Codes that account for the majority of spending under the PFS;
- Codes for services that have experienced a substantial change in the hospital length of stay or procedure time;
- Codes for which there may be a change in the typical site of service since the code was last valued;
- Codes for which there is a significant difference in payment for the same service between different sites of service;
- Codes for which there may be anomalies in relative values within a family of codes;
- Codes for services where there may be efficiencies when a service is furnished at the same time as other services;
- Codes with high intra-service work per unit of time;
- Codes with high PE RVUs; and
- Codes with high cost supplies.

Section 1848(c)(2)(K)(iii) of the Act also specifies that the Secretary may use existing processes to receive recommendations on the review and appropriate adjustment of potentially misvalued services. In addition, the Secretary may conduct surveys, other data collection activities, studies, or other analyses, as the Secretary determines to be appropriate, to facilitate the review and appropriate adjustment of potentially misvalued services. This section also authorizes the use of analytic contractors to identify and analyze potentially misvalued codes, conduct surveys or collect data, and make recommendations on the review and appropriate adjustment of potentially misvalued services. Additionally, this section provides that the Secretary may coordinate the review and adjustment of any RVU with the periodic review described in section 1848(c)(2)(B) of the Act. Section 1848(c)(2)(K)(iii)(V) of the Act specifies that the Secretary may make appropriate coding revisions (including using existing processes for consideration of coding changes) that may include consolidation of individual services into bundled codes for payment under the PFS.

b. Progress in Identifying and Reviewing Potentially Misvalued Codes

To fulfill our statutory mandate, we have identified and reviewed numerous potentially misvalued codes as specified in section 1848(c)(2)(K)(ii) of the Act, and we plan to continue our work examining potentially misvalued codes in these areas over the upcoming years. As part of our current process, we identify potentially misvalued codes for review, and request recommendations from the RUC and other public commenters on revised work RVUs and direct PE inputs for those codes. The RUC, through its own processes, also identifies potentially misvalued codes for review. Through our public nomination process for potentially misvalued codes established in the CY 2012 PFS final rule with comment period, other individuals and stakeholder groups submit nominations for review of potentially misvalued codes as well.

Since CY 2009, as a part of the annual potentially misvalued code review and the five-year review process, we have reviewed over 1,250 potentially misvalued codes to refine work RVUs and direct PE inputs. We have assigned appropriate work RVUs and direct PE inputs for these services as a result of these reviews. A more detailed discussion of the extensive prior reviews of potentially misvalued codes is included in the CY 2012 PFS final rule with comment period (76 FR 73052 through 73055). In the CY 2012 final rule with comment period, we finalized our policy to consolidate the review of physician work and PE at the same time (76 FR 73055 through 73958), and established a process for the annual

public nomination of potentially misvalued services.

In the CY 2013 final rule with comment period, we built upon the work we began in CY 2009 to review potentially misvalued codes that have not been reviewed since the implementation of the PFS (so-called ''Harvard-valued codes''). In CY 2009, we requested recommendations from the RUC to aid in our review of Harvard-valued codes that had not yet been reviewed, focusing first on high-volume, low intensity codes (73 FR 38589). In the Fourth Five-Year Review, we requested recommendations from the RUC to aid in our review of Harvard-valued codes with annual utilization of greater than 30,000 (76 FR 32410). In the CY 2013 final rule with comment period, we identified Harvard-valued services with annual allowed charges that total at least $10,000,000 as potentially misvalued. In addition to the Harvard-valued codes, in the CY 2013 final rule with comment period we finalized for review a list of potentially misvalued codes that have stand-alone PE (codes with physician work and no listed work time and codes with no physician work and have listed work time).

In the CY 2014 final rule with comment period, we finalized for review a list of potentially misvalued services that included ultrasound guidance codes that had longer procedure times than the typical procedure with which the code is billed to Medicare. We also finalized our proposal to replace missing post-operative hospital evaluation and management (E/M) visit information and work time for approximately 100 global surgery codes. In CY 2014, we also considered a proposal to limit Medicare PFS payments for services furnished in a nonfacility setting when the PFS payment would exceed the combined Medicare payment under the PFS to the practitioner and facility payment made to either the ASC or hospital outpatient. Based upon extensive public comment we did not finalize this proposal. We address our current consideration of the potential use of OPPS data in establishing RVUs for PFS services in section II.A. of this proposed rule.

c. Validating RVUs of Potentially Misvalued Codes

Section 1848(c)(2)(L) of the Act requires the Secretary to establish a formal process to validate RVUs under the PFS. The Act specifies that the validation process may include validation of work elements (such as time, mental effort and professional judgment, technical skill and physical effort, and stress due to risk) involved with furnishing a service and may include validation of the pre-, post-, and intra-service components of work. The Secretary is directed, as part of the validation, to validate a sampling of the work RVUs of codes identified through any of the 16 categories of potentially misvalued codes specified in section 1848(c)(2)(K)(ii) of the Act. Furthermore, the Secretary may conduct the validation using methods similar to those used to review potentially misvalued codes, including conducting surveys, other data collection activities, studies, or other analyses as the Secretary determines to be appropriate to facilitate the validation of RVUs of services.

In the CY 2011 PFS proposed rule (75 FR 40068) and CY 2012 PFS proposed rule (76 FR 42790), we solicited public comments on possible approaches, methodologies, and data sources that we should consider for a validation process. A summary of the comments along with our responses are included in the CY 2011 PFS final rule with comment period (75 FR 73217) and the CY 2012 PFS final rule with comment period (73054 through 73055).

Since that time, we have contracted with two outside entities to develop validation models for RVUs. Given the central role of time in establishing work RVUs and the concerns that have been raised about the current time values used in rate setting, we contracted with the Urban Institute to collect time data from several practices for services selected by the contractor in consultation with CMS. These data will be used to develop time estimates for PFS services. The Urban Institute will use a variety of approaches to develop objective time estimates, depending on the type of service. Objective time estimates will be compared to the current time values used in the fee schedule. The project team will then convene groups of physicians from a range of specialties to review the new time data and their potential implications for work and the ratio of work to time. In its efforts to collect primary data on the time involved in PFS services, the Urban Institute has encountered numerous challenges. An interim report, Development of a Model for the Valuation of Work Relative Value Units, discusses the challenges encountered in collecting objective time data and offers some thoughts on how these can be overcome. This interim report is on the CMS Web site at *http://www.cms.gov/Medicare/Medicare-Fee-for-Service-Payment/PhysicianFeeSched/Downloads/RVUs-Validation-Urban-Interim-Report.pdf.* Collection of time data under this project has just begun. A final report will be available once the project is complete.

The second contract is with the RAND Corporation, which is using available data to build a validation model to predict work RVUs and the individual components of work RVUs, time, and intensity. The model design was informed by the statistical methodologies and approach used to develop the initial work RVUs and to identify potentially misvalued procedures under current CMS and RUC processes. RAND will use a representative set of CMS-provided codes to test the model. RAND consulted with a technical expert panel on model design issues and the test results. We anticipate a report from this project by the end of the year and will make the report available on the CMS Web site.

Descriptions of both projects are available on the CMS Web site at *http://www.cms.gov/Medicare/Medicare-Fee-for-Service-Payment/PhysicianFeeSched/Downloads/RVUs-Validation-Model.pdf.*

3. CY 2015 Identification and Review of Potentially Misvalued Services

a. Public Nomination of Potentially Misvalued Codes

In the CY 2012 PFS final rule with comment period, we finalized a process for the public to nominate potentially misvalued codes (76 FR 73058). The public and stakeholders may nominate potentially misvalued codes for review by submitting the code with supporting documentation during the 60-day public comment period following the release of the annual PFS final rule with comment period. Supporting documentation for codes nominated for the annual review of potentially misvalued codes may include the following:

- Documentation in the peer reviewed medical literature or other reliable data that there have been changes in physician work due to one or more of the following: technique; knowledge and technology; patient population; site-of-service; length of hospital stay; and work time.
- An anomalous relationship between the code being proposed for review and other codes.
- Evidence that technology has changed physician work.
- Analysis of other data on time and effort measures, such as operating room logs or national and other representative databases.
- Evidence that incorrect assumptions were made in the previous

valuation of the service, such as a misleading vignette, survey, or flawed crosswalk assumptions in a previous evaluation.

• Prices for certain high cost supplies or other direct PE inputs that are used to determine PE RVUs are inaccurate and do not reflect current information.

• Analyses of work time, work RVU, or direct PE inputs using other data sources (for example, Department of Veteran Affairs (VA) National Surgical Quality Improvement Program (NSQIP), the Society for Thoracic Surgeons (STS) National Database, and the Physician Quality Reporting System (PQRS) databases).

• National surveys of work time and intensity from professional and management societies and organizations, such as hospital associations.

We evaluate the supporting documentation submitted with the nominated codes and assess whether the nominated codes appear to be potentially misvalued codes appropriate for review under the annual process. In the following year's PFS proposed rule, we publish the list of nominated codes and indicate whether we are proposing each nominated code as a potentially misvalued code. The public has the opportunity to comment on these and all other proposed potentially misvalued codes. In that year's final rule, we finalize our list of potentially misvalued codes.

During the comment period on the CY 2014 final rule with comment period, we received nominations and supporting documentation for two codes to be considered as potentially misvalued codes. We evaluated the supporting documentation for each nominated code to ascertain whether the submitted information demonstrated that the code should be proposed as potentially misvalued.

CPT code 41530 (submucosal ablation of the tongue base, radiofrequency, 1 or more sites, per session) was nominated for review as a potentially misvalued code. The nominator stated that CPT code 41530 is misvalued because there have been changes in the PE items used in furnishing the service. The nominator specifically requested that the SD109 probe (probe, radiofrequency, 3 array (StarBurstSDE)) be replaced with a more typically used probe, which costs less, and that a replacement be used for equipment code EQ214 (radiofrequency generator) to reflect a more appropriate input based on current invoices. We are proposing this code as a potentially misvalued code.

CPT code 99174 (instrument-based ocular screening (eg, photoscreening, automated-refraction), bilateral) was also nominated for review as a potentially misvalued code. The nominator asserted that CPT code 99174 is misvalued because of outdated capital equipment inputs and the removal of supply code SK110 (fee, image analysis) from the code's direct PE inputs. (The latter change was proposed and finalized during CY 2014 notice and comment rulemaking). In establishing our public nomination process, we specified that the we would only consider nominations of active codes that are covered by Medicare at the time of the nomination stating, ''We also are limiting the review of RVUs to codes that are active, covered by Medicare, and for which the RVUs are used for payment purposes under the PFS so that resources are not expended on the review of codes with RVUs that have no financial impact on the PFS.'' (76 FR 73059). CPT code 99174 is non-covered on the PFS and therefore does not meet the criteria for review as a potentially misvalued code. Accordingly, we are not proposing CPT code 99174 as a potentially misvalued code.

b. Potentially Misvalued Codes

(1) Review of High Expenditure Services Across Specialties With Medicare Allowed Charges of $10,000,000 or More

We are proposing the approximately 65 codes listed in Table 10 as potentially misvalued codes as a prioritized subset of codes of the newly established statutory category, ''codes that account for the majority of spending under the physician fee schedule.'' As we identify potentially misvalued codes, we prioritize codes that are important to the Medicare program and its beneficiaries, and codes that account for a high level of Medicare expenditures meet this criterion. However, through our usual identification potentially misvalued codes it is possible to miss certain services that are important to a segment of Medicare practitioners and beneficiaries because the specialty that typically furnishes the service does not have high volume relative to the overall PFS utilization. To capture such services in developing this list, we looked at high expenditure services by specialty using a similar approach to the one we used in CY 2012. We believe it is appropriate to repeat this type of analysis periodically.

To develop the CY 2015 proposed list in this category, we began by identifying the top 20 codes by specialty in terms of allowed charges. For this analysis, we used the same specialties as used for the impact analysis in section VI. of this proposed rule. We excluded codes from our proposed potentially misvalued list that we have reviewed since CY 2009, with fewer than $10 million in allowed charges, and that describe anesthesia or E/M services. We excluded E/M services from the list of proposed potentially misvalued codes for the same reasons that we excluded them in the CY 2012 analysis, which we explained in the CY 2012 final rule with comment period (76 FR 73062 through 73065).

We believe that a review of the codes in Table 10 is warranted to assess changes in physician work and to update direct PE inputs since these codes have not been reviewed since CY 2009 or earlier. Furthermore, since these codes have significant impact on PFS payment at the specialty level, a review of the relativity of the codes is essential to ensure that the work and PE RVUs are appropriately relative within the specialty and across specialties, as discussed previously. For these reasons, we are proposing the codes listed in Table 10 as potentially misvalued.

TABLE 10—PROPOSED POTENTIALLY MISVALUED CODES IDENTIFIED THROUGH HIGH EXPENDITURE SPECIALTY SCREEN

HCPCS	Short descriptor
11100	Biopsy skin lesion.
11101	Biopsy skin add-on.
11730	Removal of nail plate.
11750	Removal of nail bed.
14060	Tis trnfr e/n/e/l 10 sq cm/.
17110	Destruct b9 lesion 1–14.
31575	Diagnostic laryngoscopy.
31579	Diagnostic laryngoscopy.
36215	Place catheter in artery.
36475	Endovenous rf 1st vein.
36478	Endovenous laser 1st vein.
36870	Percut thrombect av fistula.
51720	Treatment of bladder lesion.
51728	Cystometrogram w/vp.
51798	Us urine capacity measure.
52000	Cystoscopy.
55700	Biopsy of prostate.
65855	Laser surgery of eye.
66821	After cataract laser surgery.
67228	Treatment of retinal lesion.
68761	Close tear duct opening.
71010	Chest x-ray 1 view frontal.
71020	Chest x-ray 2vw frontal&latl.
71260	Ct thorax w/dye.
73560	X-ray exam of knee 1 or 2.
73562	X-ray exam of knee 3.
73564	X-ray exam knee 4 or more.
74183	Mri abdomen w/o & w/dye.
75978	Repair venous blockage.
76536	Us exam of head and neck.
76700	Us exam abdom complete.
76770	Us exam abdo back wall comp.
76775	Us exam abdo back wall lim.
77263	Radiation therapy planning.
77334	Radiation treatment aid(s).
78452	Ht muscle image spect mult.

TABLE 10—PROPOSED POTENTIALLY MISVALUED CODES IDENTIFIED THROUGH HIGH EXPENDITURE SPECIALTY SCREEN—Continued

HCPCS	Short descriptor
88185	Flowcytometry/tc add-on.
91110	Gi tract capsule endoscopy.
92136	Ophthalmic biometry.
92250	Eye exam with photos.
92557	Comprehensive hearing test.
93280	Pm device progr eval dual.
93306	Tte w/doppler complete.
93351	Stress tte complete.
93978	Vascular study.
94010	Breathing capacity test.
95004	Percut allergy skin tests.
95165	Antigen therapy services.
95957	Eeg digital analysis.
96101	Psycho testing by psych/phys.
96118	Neuropsych tst by psych/phys.
96372	Ther/proph/diag inj sc/im.
96375	Tx/pro/dx inj new drug addon.
96401	Chemo anti-neopl sq/im.
96409	Chemo iv push sngl drug.
97032	Electrical stimulation.
97035	Ultrasound therapy.
97110	Therapeutic exercises.
97112	Neuromuscular reeducation.
97113	Aquatic therapy/exercises.
97116	Gait training therapy.
97140	Manual therapy 1/> regions.
97530	Therapeutic activities.
G0283	Elec stim other than wound.

(2) Epidural Injection and Fluoroscopic Guidance—CPT Codes 62310, 62311, 62318, 62319, 77001, 77002 and 77003

For CY 2014, we established interim final values for four epidural injection procedures, CPT codes 62310 (Injection(s), of diagnostic or therapeutic substance(s) (including anesthetic, antispasmodic, opioid, steroid, other solution), not including neurolytic substances, including needle or catheter placement, includes contrast for localization when performed, epidural or subarachnoid; cervical or thoracic), 62311 (Injection(s), of diagnostic or therapeutic substance(s) (including anesthetic, antispasmodic, opioid, steroid, other solution), not including neurolytic substances, including needle or catheter placement, includes contrast for localization when performed, epidural or subarachnoid; lumbar or sacral (caudal)), 62318 (Injection(s), including indwelling catheter placement, continuous infusion or intermittent bolus, of diagnostic or therapeutic substance(s) (including anesthetic, antispasmodic, opioid, steroid, other solution), not including neurolytic substances, includes contrast for localization when performed, epidural or subarachnoid; cervical or thoracic) and 62319 (Injection(s), including indwelling catheter placement, continuous infusion or intermittent bolus, of diagnostic or therapeutic substance(s) (including anesthetic, antispasmodic, opioid, steroid, other solution), not including neurolytic substances, includes contrast for localization when performed, epidural or subarachnoid; lumbar or sacral (caudal)). These interim final values resulted in CY 2014 payment reductions from the CY 2013 rates for all four procedures.

In the CY 2014 final rule with comment period (78 FR 74340), we described in detail our interim valuation of these codes. We indicated we established interim final work RVUs for these codes below those recommended by the RUC because we did not believe that the RUC-recommended work RVUs accounted for the substantial decrease in time it takes to furnish these services since the last time they were valued as reflected in the RUC survey data for these four codes. Since the RUC provided no indication that the intensity of the procedures had changed, we believed that the work RVUs should reflect the reduction in time. We also established interim final direct PE inputs for these four codes based on the RUC-recommended inputs without any refinement. These recommendations included the removal of the radiographic-fluoroscopy room for 62310, 62311, and 62318 and a portable C-arm for 62319.

We received thousands of comments objecting to the CY 2014 interim final values for these codes, many citing concerns with patient access and with the potential for the payment reductions under the PFS to inappropriately incentivize the use of the hospital setting or to encourage the use of other injections. Some suggested these payment rates might affect the rate of opioid use. Although most comments did not address the accuracy of the relative value inputs used in determining PFS payment rates, those that did most often objected to our valuations of the work RVUs and recommended that we instead accept the RUC recommendations. Several commenters objected to our rationale for setting the interim final work RVUs lower than the RUC-recommended values primarily based upon the reduction in time. Commenters gave two primary reasons why this reduction was inappropriate. Some pointed out that a reduction in work based upon a reduction in time presumes that the existing time is correct. These commenters asserted that the existing times were not correct for these codes. For example, the RUC noted that the CY 2013 survey times were from the original 1999 survey and were an outlier when compared to the previously reported code's original Harvard-valued total time of 42 minutes. One commenter noted that CMS indicates that in setting work values, the agency considers time, mental effort, professional judgment, technical skill, physical effort and stress due to risk; but in this case, rather than following our process, we only considered time. Others also said that we did not take into account the intensity, complexity, or risk of performing epidural injections. Commenters disagreed with the use of the lowest RUC survey value as the basis for the work valuation. One commenter said that we failed to explain adequately why our work RVUs were below those recommended by the RUC. One recommended that we assign values more similar to those used for paravertebral injections.

Two commenters stated that critical PE inputs, including an epidural needle, loss or resistance syringe and spinal needle, were missing from the valuation. One commenter indicated that a radiographic-fluoroscopic room should be included for CPT codes 62310, 62311 and 62318; and a mobile C-Arm should be included for CPT code 62319. Another commenter requested the decreases in the PE RVUs be phased in over a period of years.

Several commenters objected to the use of the interim final process for valuing these codes, citing the lack of opportunity for public comment and the lack of time to adequately prepare before the cuts to reimbursement took effect. Some suggested a delay in implementation.

Lastly, several commenters requested refinement panel review of these codes.

After analyzing the comments and considering valuation of these codes, we believe that we need to reassess our valuation of these codes and require additional information in order to do so. Our data show that these epidural codes are frequently billed with imaging guidance. For example, CPT code 62310 was billed with CPT code 77003 (Fluoroscopic guidance and localization of needle or catheter tip for spine or paraspinous diagnostic or therapeutic injection procedures (epidural or subarachnoid)) 79 percent of the time in the nonfacility setting in CY 2013. CPT code 62319, which is the epidural injection code that is least frequently billed with CPT code 77003 in the nonfacility setting, was still billed with this guidance code 40 percent of the time. These codes were also frequently billed with image guidance in the facility setting. CPT codes 62310 and 62311 were billed with CPT code 77003, 79 percent and 74 percent of the time,

respectively in CY 2013. However, in the facility setting CPT codes 62318 and 62319 were much less frequently billed with CPT code 77003, only 3 percent and 11 percent, respectively. In addition, these four epidural injection codes are sometimes billed with other fluoroscopic or imaging guidance codes. Based on the frequency with which these codes are reported with fluoroscopic guidance codes, it appears that fluoroscopic guidance is both typically used and typically reported separately in conjunction with the epidural injection services.

As we considered the concerns raised regarding the CY 2014 payment changes for the epidural injection procedures, we looked at the values for other injection procedures. Other injection procedures, including some recommended by commenters for use as a reference in valuing these epidural injection codes, include the work and PEs of image guidance in the injection code. For example, transforaminal injections, CPT codes 64479 (Injection(s), anesthetic agent and/or steroid, transforaminal epidural, with imaging guidance (fluoroscopy or CT); cervical or thoracic, single level), 64480 (Injection(s), anesthetic agent and/or steroid, transforaminal epidural, with imaging guidance (fluoroscopy or CT); cervical or thoracic, each additional level (List separately in addition to code for primary procedure)), 64483 (Injection(s), anesthetic agent and/or steroid, transforaminal epidural, with imaging guidance (fluoroscopy or CT); lumbar or sacral, single level) and 64484 (Injection(s), anesthetic agent and/or steroid, transforaminal epidural, with imaging guidance (fluoroscopy or CT); lumbar or sacral, each additional level (List separately in addition to code for primary procedure)) include the image guidance in the injection code. Similarly, the paravertebral injections, CPT code 64490 (Injection(s), diagnostic or therapeutic agent, paravertebral facet (zygapophyseal) joint (or nerves innervating that joint) with image guidance (fluoroscopy or CT), cervical or thoracic; single level), 64491 (Injection(s), diagnostic or therapeutic agent, paravertebral facet (zygapophyseal) joint (or nerves innervating that joint) with image guidance (fluoroscopy or CT), cervical or thoracic; second level (List separately in addition to code for primary procedure)), 64492 (Injection(s), diagnostic or therapeutic agent, paravertebral facet (zygapophyseal) joint (or nerves innervating that joint) with image guidance (fluoroscopy or CT), cervical or thoracic; third and any additional level(s) (List separately in addition to code for primary procedure)), 64493 (Injection(s), diagnostic or therapeutic agent, paravertebral facet (zygapophyseal) joint (or nerves innervating that joint) with image guidance (fluoroscopy or CT), lumbar or sacral; single level), 64494 (Injection(s), diagnostic or therapeutic agent, paravertebral facet (zygapophyseal) joint (or nerves innervating that joint) with image guidance (fluoroscopy or CT), lumbar or sacral; second level (List separately in addition to code for the primary procedure)) and 64495 (Injection(s), diagnostic or therapeutic agent, paravertebral facet (zygapophyseal) joint (or nerves innervating that joint) with image guidance (fluoroscopy or CT), lumbar or sacral; third and any additional level(s)(List separately in addition to code for primary procedure)) each include the image guidance bundled in the injection CPT code.

Based upon our analysis of the Medicare claims data and comments received on the CY 2014 final rule with comment period, it appears that these codes are typically furnished with imaging guidance. Thus, we believe it would be appropriate for the injection and imaging guidance codes to be bundled and the inputs for image guidance to be included in the valuation of the epidural injection codes as it is for transforaminal and paravertebral codes. We do not believe the epidural injection codes can be appropriately valued without considering the typical use of image guidance. We also believe this will help assure relativity with other injection codes that include the image guidance. To determine how to appropriately value resources for the combined codes, we believe more information is needed. Accordingly, we propose to include CPT codes 62310, 62311, 62318 and 62319 on the potentially misvalued code list so that we can obtain information to support their valuation with the image guidance included. In the meantime, we are proposing to revert to the CY 2013 input values for CPT codes 62310, 62311, 62318 and 62319 for CY 2015. Specifically, we will use the CY 2013 work RVUs, work times, and direct PE inputs to establish payment rates for CY 2015. The work, PE, and MP RVUs for these codes are listed in Addendum B and the time values for all CY 2015 codes are listed in the file ''CY 2015 PFS Work Time,'' available on the CMS Web site under downloads for the CY 2015 PFS proposed rule at *http://www.cms.gov/Medicare/Medicare-Fee-for-Service-Payment/PhysicianFeeSched/PFS-Federal-Regulation-Notices.html.* The direct PE inputs are displayed the file ''CY 2015 PFS Direct PE Inputs,'' available on the CMS Web site under downloads for the CY 2015 PFS proposed rule at *http://www.cms.gov/Medicare/Medicare-Fee-for-Service-Payment/PhysicianFeeSched/PFS-Federal-Regulation-Notices.html.*

Because it is clear that the proposed PE inputs for the epidural injection codes include items that are specifically related to image guidance, such as the radiographic fluoroscopic room, we believe separate reporting of the image guidance codes would overestimate the resources used in furnishing the two services together. To avoid this situation, we are also proposing to prohibit the billing of image guidance codes in conjunction with these four epidural injection codes. We believe our two-tiered proposal to utilize CY 2013 input values for this code family, while prohibiting the separate billing of imaging guidance codes in conjunction with epidural injection, would best ensure that appropriate reimbursement continues to be made while we gather additional information and consider the best way to value these services.

With regard to comments about the time for responding to the interim values, we would refer to section II.F of this proposed rule, which discusses a proposal to make changes in the process used for establishing revised values for codes such as these.

With regard to the request for refinement, we are denying this request as the comments do not demonstrate that the requirements for refinement were met. Moreover, since we are proposing different values for these codes for CY 2015 (using CY 2013 inputs) there would be no purpose for refinement as the public comment period for this proposed rule will provide the opportunity for the public to share any relevant information on our proposed values.

(3) Neurostimulator Implantation—CPT Codes 64553 and 64555

A stakeholder raised questions regarding whether CPT codes 64553 (Percutaneous implantation of neurostimulator electrode array; cranial nerve) and 64555 (Percutaneous implantation of neurostimulator electrode array; peripheral nerve (excludes sacral nerve)) included the appropriate direct PE inputs when furnished in the nonfacility setting. It appears that these inputs have not been evaluated recently and, therefore, we are nominating these codes as potentially misvalued for the purpose of

ascertaining whether or not there are nonfacility direct PE inputs that are not included in the direct PE inputs that are typical supply costs for these services.

(4) Mammography—CPT Codes 77055, 77056, and 77057, and HCPCS Codes G0202, G0204, and G0206

Medicare currently pays for mammography services through both CPT codes, (77055 (mammography; unilateral), 77056 (mammography; bilateral) and 77057 (screening mammography, bilateral (2-view film study of each breast)) and HCPCS G-codes, (G0202 (screening mammography, producing direct digital image, bilateral, all views), G0204 (diagnostic mammography, producing direct digital image, bilateral, all views), and G0206 (diagnostic mammography, producing direct digital image, unilateral, all views)). The CPT codes were designed to be used for mammography regardless of whether film or digital technology is used. However, for Medicare purposes, the HCPCS G-codes were created to be used for digital technology in response to special payment rules for digital mammography included in the Medicare Benefit Improvements and Protection Act of 2000.

As discussed in section II.A., the RUC recommended that CMS update the direct PE inputs for all imaging codes to reflect the migration from film-to-digital storage technologies since digital storage is now the typically used in imaging.

Our data confirms that the overwhelming majority of all mammography is digital. As a result, we are proposing that the CPT codes 77055, 77056 and 77057 be used for reporting mammography to Medicare regardless of whether film or digital technology is used, and to delete the HCPCS G-codes G0202, G0204, and G0206. We are proposing, for CY 2015, to value the CPT codes using the values established for the digital mammography G-codes since digital technology is now the typical service. (See section II.A. of this proposed rule for more discussion of this proposal.) In addition, since the G-codes values that we propose to use for the CPT codes for CY 2015 have not been reviewed since they were created in CY 2002, we are proposing to include CPT codes 77055, 77056, and 77057 on the list of potentially misvalued codes.

(5) Abdominal Aortic Aneurysm Ultrasound Screening—G0389

When Medicare began paying for abdominal aortic aneurysm (AAA) ultrasound screening in CY 2007, we created HCPCS code G0389 (Ultrasound, B-scan and/or real time with image documentation; for abdominal aortic aneurysm (AAA) screening), and set the RVUs at the same level as CPT code 76775 (Ultrasound, retroperitoneal (e.g., renal, aorta, nodes), B-scan and/or real time with image documentation; limited). We noted in the CY 2007 final rule with comment period that CPT code 76775 was used to report the service when furnished as a diagnostic test and that we believed the service reflected by G0389 used equivalent resources and work intensity to those contained in CPT code 76775 (71 FR 69664 through 69665).

In the CY 2014 proposed rule, based on a RUC recommendation, we proposed to replace the ultrasound room included as a direct PE input for CPT code 76775 with a portable ultrasound unit. Since all the RVUs (including the PE RVUs) for G0389 were crosswalked from CPT code 76775, the proposed PE RVUs for G0389 in the CY 2014 proposed rule were reduced significantly as a result of this change to the direct PE inputs for 76775. However, we did not discuss the applicability of this change to G0389 in the proposed rule's preamble and did not receive any comments on G0389 in response to the proposed rule. We finalized the change to CPT code 76775 in the CY 2014 final rule with comment period and the corresponding PE RVUs for G0389 were also reduced.

Subsequent to the publication of the CY 2014 final rule, a stakeholder suggested that the reduction in the RVUs for G0389 did not accurately reflect the resources involved in furnishing the service and asked that CMS consider using an alternative crosswalk. Specifically, the stakeholder stated that the type of equipment typically used in furnishing G0389 is different than that used for CPT code 76775, the time involved in furnishing G0389 is greater than that of CPT code 76775, and the specialty that typically furnishes G0389 is different than the one that typically furnishes CPT code 76775. The stakeholder suggested an alternative crosswalk of CPT code 76705 (Ultrasound, abdominal, real time with image documentation; limited (eg, single organ, quadrant, follow-up)).

After considering the issue, we are proposing G0389 as a potentially misvalued code and seeking recommendations regarding the appropriate inputs that should be used to develop RVUs for this code. We have not reviewed the inputs used to develop RVUs for this code since it was established in CY 2007 and the RVUs were directly crosswalked from 76705. Based on the issues raised by stakeholders, we believe that we should value this code through our standard methodologies, including the full PE RVU methodology. In order to do so, we are proposing to include this code on our list of proposed potentially misvalued codes and seek input from the public and other stakeholders, including the RUC, regarding the appropriate work RVU, time, and direct PE inputs that reflect the typical resources involved in furnishing the service.

Until we receive the information needed to revalue this service, we are proposing to maintain the work RVU for this code and revert to the same PE RVUs we used for CY 2013, adjusted for budget neutrality. We are proposing MP RVUs based on the five-year review update process as described in section II.C of this proposed rule. We believe this valuation will ameliorate the effect of the CY 2014 reduction in G0389 that resulted from reflection of the change in RVUs for the crosswalked code while we assess the valuation of this code through our usual methodologies. The proposed PE RVUs are contained in Addendum B available on the CMS Web site under downloads for the CY 2015 PFS proposed rule at *http://www.cms.gov/Medicare/Medicare-Fee-for-Service-Payment/PhysicianFeeSched/PFS-Federal-Regulation-Notices.html.*

(6) Prostate Biopsy Codes—HCPCS Codes G0416, G0417, G0418, and G0419

For CY 2014, we modified the code descriptors of G0416 through G0419 so that these codes could be used for any method of prostate needle biopsy services, rather than only for prostate saturation biopsies. The CY 2014 descriptions are:

- G0416 (Surgical pathology, gross and microscopic examination for prostate needle biopsies, any method; 10–20 specimens).
- G0417 (Surgical pathology, gross and microscopic examination for prostate needle biopsies, any method; 21–40 specimens).
- G0418 (Surgical pathology, gross and microscopic examination for prostate needle biopsies, any method; 41–60 specimens).
- G0419 (Surgical pathology, gross and microscopic examination for prostate needle biopsies, any method; greater than 60 specimens).

Subsequently, we have discussed prostate biopsies with stakeholders, and reviewed medical literature and Medicare claims data in considering how best to code and value prostate biopsy pathology services. In considering these discussions and our review, we have become aware that the

current coding structure may be confusing, especially since the number of specimens associated with prostate biopsies is relatively homogenous. For example, G0416 (10–20 specimens) represents the overwhelming majority of all Medicare claims submitted for the four G-codes. Therefore, in the interest of both establishing straightforward coding and maintaining accurate payment, we believe it would be appropriate to use only one code to report prostate biopsy pathology services. Therefore, we propose to revise the descriptor for G0416 to define the service regardless of the number of specimens, and to delete codes G0417, G0418, and G0419. We propose to revise G0416 for use to report all prostate biopsy pathology services, regardless of the number of specimens, because we believe this will eliminate the possible confusion caused by the coding while maintaining payment accuracy.

Based on our review of medical literature and examination of Medicare claims data, we believe that the typical number of specimens evaluated for prostate biopsies is between 10 and 12. Since G0416 is the code that currently is valued and used for between 10 and 12 specimens, we are proposing to use the existing values for G0416 for CY 2015.

In addition, we are proposing G0416 as a potentially misvalued code for CY 2015. We seek public comment on the appropriate work RVUs, work time, and direct PE inputs.

(7) Obesity Behavioral Group Counseling—GXXX2 and GXXX3

Under section 1861(ddd) of the Act, we added coverage for a new preventive benefit, Intensive Behavioral Therapy for Obesity, effective November 29, 2011, and created HCPCS code G0447 (Face-to-face behavioral counseling for obesity, 15 minutes) for reporting and payment of individual behavioral counseling for obesity. Coverage requirements specific to this service are delineated in the Medicare National Coverage Determinations Manual, Pub. 100–03, Chapter 1, Section 210, available at *http://www.cms.gov/manuals/downloads/ncd103c1_Part4.pdf.*

It has been brought to our attention that behavioral counseling for obesity is sometimes furnished in group sessions, and questions were raised about whether group sessions could be billed using HCPCS code G0447. To improve payment accuracy, we are creating two new HCPCS codes for the reporting and payment of group behavioral counseling for obesity. Specifically, we are creating GXXX2 (Face-to-face behavioral counseling for obesity, group (2–4), 30 minutes) and GXXX3 (Face-to-face behavioral counseling for obesity, group (5–10), 30 minutes). The coverage requirements for these services would remain in place, as described in the National Coverage Determination for Intensive Behavioral Therapy for Obesity cited in this section of the proposed rule. The practitioner furnishing these services would report the relevant group code for each beneficiary participating in a group therapy session.

We believe that the face-to-face behavioral counseling for obesity services described by GXXX2 and GXXX3 would require similar per minute work and intensity as HCPCS code G0447, which is a 15-minute code with a work RVU of 0.45. Therefore, to develop proposed work RVUs for HCPCS codes GXXX2 and GXXX3 we scaled the work RVU of HCPCS code G0447 to reflect the differences in the codes in terms of the time period covered by the code and the typical number of beneficiaries per session. Adjusting the work RVU for the longer time of the group codes results in a work RVU of 0.90 for a 30-minute session. Since the services described by GXXX2 and GXXX3 will be billed per beneficiary receiving the service, the work RVUs and work time that we are proposing for these codes are based upon the typical number of beneficiaries per session, 4 and 9, respectively. Accordingly, we are proposing a work RVU of 0.23 with a work time of 8 minutes for GXXX2 and a work RVU of 0.10 with a work time of 3 minutes for GXXX3.

Using the same logic, we are proposing to use the direct PE inputs for GXXX2 and GXXX3 currently included for G0447, prorated to account for the differences in time and number of beneficiaries described by the new codes. The proposed direct PE inputs for these codes are included in the CY 2015 proposed direct PE input database, available on the CMS Web site under the downloads for the CY 2015 PFS proposed rule at *http://www.cms.gov/PhysicianFeeSched/.* We are also proposing to crosswalk the malpractice risk factor from HCPCS code G0447 to both HCPCS codes GXXX2 and GXXX3, as we believe the same specialty mix will furnish these services. We request public comment on these proposed values for HCPCS codes GXXX2 and GXXX3.

4. Improving the Valuation and Coding of the Global Package

a. Overview

Since the inception of the PFS, we have valued and paid for certain services, such as surgery, as part of global packages that include the procedure and the services typically provided in the periods immediately before and after the procedure (56 FR 59502). For each of these codes (usually referred to as global surgery codes), we establish a single PFS payment that includes payment for particular services that we assume to be typically furnished during the established global period.

There are three primary categories of global packages that are labeled based on the number of post-operative days included in the global period: 0-day; 10-day; and 90-day. The 0-day global codes include the surgical procedure and the pre-operative and post-operative physicians' services on the day of the procedure, including visits related to the service. The 10-day global codes include these services and, in addition, visits related to the procedure during the 10 days following the procedure. The 90-day global codes include the same services as the 0-day global codes plus the pre-operative services furnished one day prior to the procedure and post-operative services during the 90 days immediately following the day of the procedure.

Section 40.1 of the Claims Processing Manual (Pub. 100–04, Chapter 12 Physician/Nonphysician Practitioners) defines the global surgical package to include the following services when furnished during the global period:

- Preoperative Visits—Preoperative visits after the decision is made to operate beginning with the day before the day of surgery for major procedures and the day of surgery for minor procedures;
- Intra-operative Services—Intra-operative services that are normally a usual and necessary part of a surgical procedure;
- Complications Following Surgery—All additional medical or surgical services required of the surgeon during the postoperative period of the surgery because of complications that do not require additional trips to the operating room;
- Postoperative Visits—Follow-up visits during the postoperative period of the surgery that are related to recovery from the surgery;
- Postsurgical Pain Management—By the surgeon;
- Supplies—Except for those identified as exclusions; and

• Miscellaneous Services—Items such as dressing changes; local incisional care; removal of operative pack; removal of cutaneous sutures and staples, lines, wires, tubes, drains, casts, and splints; insertion, irrigation and removal of urinary catheters, routine peripheral intravenous lines, nasogastric and rectal tubes; and changes and removal of tracheostomy tubes.

b. Concerns With the 10- and 90-Day Global Packages

CMS supports bundled payments as a mechanism to incentivize high-quality, efficient care. Although on the surface, the PFS global codes appear to function as bundled payments similar to those Medicare uses to make single payments for multiple services to hospitals under the inpatient and outpatient prospective payment systems, the practical reality is that these global codes function significantly differently than other bundled payments. First, the global surgical codes were established several decades ago when surgical follow-up care was far more homogenous than today. Today, there is more diversity in the kind of procedures covered by global periods, the settings in which the procedures and the follow-up care are furnished, the health care delivery system and business arrangements used by Medicare practitioners, and the care needs of Medicare beneficiaries. Despite these changes, the basic structures of the global surgery packages are the same as the packages that existed prior to the creation of the resource-based relative value system in 1992. Another significant difference between this and other typical models of bundled payments is that the payment rates for the global surgery packages are not updated regularly based on any reporting of the actual costs of patient care. For example, the hospital inpatient and outpatient prospective payment systems (the IPPS and OPPS, respectively) derive payment rates from hospital cost and charge data reported through annual Medicare hospital cost reports and the most recent year of claims data available for an inpatient stay or primary outpatient service. Because payment rates are based on consistently updated data, over time, payment rates adjust to reflect the average resource costs of current practice. Similarly, many of the new demonstration and innovation models track costs and make adjustments to payments. Another significant difference is that payment for the PFS global packages relies on valuing the combined services together. This means that there are no separate PFS values established for the procedures or the follow-up care, making it difficult to estimate the costs of the individual global code component services.

These unique characteristics have contributed to the significant and numerous concerns that have been raised regarding the accuracy of payment for global codes—especially those that include 10- and 90-day post-operative periods. In the following paragraphs, we address a series of concerns regarding these codes, including: the fundamental difficulties in establishing appropriate relative values for these packages, the potential inaccuracies in the current information used to price these services, the limitations on appropriate pricing in the future, the potential for these packages to create unwarranted payment differentials among specialties, the possibility that the current codes are incompatible with current medical practice, and the potential for these codes to present obstacles to the adoption of new payment models.

Independently, concerns such as these could be seen as issues that arise when developing many different payment mechanisms, for example: making fee-for-service payment rates, making single payments for multiple services, or paying practitioners for episodes of care over a period of time. However, in the case of the post-operative portion of the 10- and 90-day global codes, we believe these multi-layered concerns create substantial barriers to accurate valuation of these services relative to other PFS services.

(1) Fundamental Limitations in the Appropriate Valuation of the Global Packages With Post-Operative Days

In general, we face many challenges in valuing PFS services as accurately as possible. However, the unique nature of global surgery packages with 10- and 90-day post-operative periods presents additional challenges distinct from those presented in valuing other PFS services. Our valuation methodology for PFS services generally relies on assumptions regarding the resources involved in furnishing the ''typical case'' for each individual service unlike other payment systems that rely on actual data on the costs of furnishing services. Consistent with this valuation methodology, the RVUs for a global code should reflect the typical number and level of E/M services furnished in connection with the procedure. However, it is much easier to maintain relativity among the services that are valued on this basis when each of the services is described by codes of similar unit sizes. In other words, because codes with long post-operative periods include such a large number of services, any variations between the ''typical'' resource costs used to value the service and the actual resource costs associated with particular services are multiplied. The effects of this problem can be two-fold, skewing the accuracy of both the RVUs for individual global codes and the Medicare payment made to individual practitioners. The RVUs of the individual global service codes are skewed whenever there is any inaccuracy in the assumption of the typical number or kind of services in the post-operative periods. This inaccuracy has a greater impact than inaccuracies in assumptions for other PFS services because it affects a greater number of service units over a period of time than for individually priced services. Furthermore, in contrast to prospective payment systems, such inaccuracies under the PFS are not corrected over time through an annual ratesetting process that makes year-to-year adjustments based on data on actual costs. For example, if a 90-day global code is valued based on an assumption that ten post-operative visits is typical, but practitioners reporting the code typically only furnish six visits, then the resource assumptions are overestimated by the value of the four visits multiplied by the number of the times the procedure code is reported. In contrast, when our assumptions are incorrect about the typical resources involved in furnishing a PFS code that describes a single service, any inaccuracy in the RVUs is limited to the difference between the resource costs assumed for the typical service and the actual resource costs in furnishing one individual service. Such a variation between the assumptions used in calculating payment rates and the actual resource costs could be corrected if the payments for packaged services were updated regularly using data on actual services furnished. Although such a mechanism is common in other bundled payment systems, there is no such mechanism under the PFS. To make adjustments to the RVUs to account for inaccurate assumptions under the current PFS methodology, the global surgery code would need to be identified as potentially misvalued, survey data would have to reflect an accurate account of the number and level of typical post-operative visits, and we (with or without a corresponding recommendation from the RUC or others) would have to implement a change in RVUs based on the change in the number and level of visits to reflect the typical service.

These amplified inaccuracies may also occur whenever Medicare pays an individual practitioner reporting a 10- or 90-day global code. Practitioners may furnish a wide range of post-operative services to individual Medicare beneficiaries, depending on individual patient needs, changes in medical practice, and dynamic business models. Due to the way the 10- and 90-day global codes are constructed, the number and level of services included for purposes of calculating the payment for these services may vary greatly from the number and level of services that are actually furnished in any particular case. In contrast, the variation between the ''typical'' and the actual resource cost for the practitioner reporting an individually valued PFS services is constrained because the practitioner is only reporting and being paid for a specific service furnished on a particular date.

For most PFS services, any difference between the ''typical'' case on which RVUs are based and the actual case for a particular service is limited to the variation between the resources assumed to be involved in furnishing the typical case and the actual resources involved in furnishing the single specific service. When the global surgical package includes more or a higher level of E/M services than are actually furnished in the typical post-operative period, the Medicare payment is based on an overestimate of the quantity or kind of services furnished, not merely an overestimation of the resources involved in furnishing an individual service. The converse is true if the RVUs for the global surgical package are based on fewer or a lower level of services than are typically furnished for a particular code.

(2) Questions Regarding Accuracy of Current Assumptions

In previous rulemaking (77 FR 68911 through 68913), we acknowledged evidence suggesting that the values included in the post-operative period for global codes may not reflect the typical number and level of post-operative E/M visits actually furnished.

In 2005, the OIG examined whether global surgical packages are appropriately valued. In its report on eye and ocular surgeries, ''National Review of Evaluation and Management Services Included in Eye and Ocular Adnexa Global Surgery Fees for Calendar Year 2005'' (A–05–07–00077), the OIG reviewed a sample of 300 eye and ocular surgeries, and counted the actual number of face-to-face services recorded in the patients' medical records to establish whether and, if so, how many post-operative E/M services were furnished by the surgeons. For about two-thirds of the claims sampled by the OIG, surgeons provided fewer E/M services in the post-operative period than were included in the global surgical package payment for each procedure. A small percentage of the surgeons furnished more E/M services than were included in the global surgical package payment. The OIG identified the number of face-to-face services recorded in the medical record, but did not review the medical necessity of the surgeries or the related E/M services. The OIG concluded that the RVUs for these global surgical packages are too high because they include a higher number of E/M services than typically are furnished within the global period for the reviewed procedures.

Following that report, the OIG continued to investigate E/M services furnished during global surgical periods. In May 2012, the OIG published a report entitled ''Musculoskeletal Global Surgery Fees Often Did Not Reflect the Number of Evaluation and Management Services Provided'' (A–05–09–00053). For this investigation, the OIG sampled 300 musculoskeletal global surgeries and again found that, for the majority of sampled surgeries, physicians furnished fewer E/M services than were included as part of the global period payment for that service. Once again, a small percentage of surgeons furnished more E/M services than were included in the global surgical package payment. The OIG concluded that the RVUs for these global surgical packages are too high because they include a higher number of E/M services than typically are furnished within the global period for the reviewed procedures.

In both reports, the OIG recommended that we adjust the number of E/M services identified with the studied global surgical payments to reflect the number of E/M services that are actually being furnished. However, since it is not necessary under our current global surgery payment policy for a surgeon to report the individual E/M services actually furnished during the global surgical period, we do not have objective data upon which to assess whether the RVUs for global period surgical services reflect the typical number or level of E/M services that are furnished. In the CY 2013 PFS proposed rule (77 FR 44738), we previously sought public comments on collecting these data. As summarized in the CY 2013 PFS final rule (77 FR 68913) we did not discover a consensus among stakeholders regarding either the most appropriate means to gather the data, or the need for, or the appropriateness of using such data in valuing these services. In response to our comment solicitation, some commenters urged us to accept the RUC survey data as accurate in spite of the OIG reports and other concerns that have been expressed regarding whether the visits included in the global periods reflected the typical case. Others suggested that we should conduct new surveys using the RUC approach or that we should mine hospital data to identify the typical number of visits furnished. Some comments suggested eliminating the 10- and 90-day global codes.

(3) Limitations on Appropriate Future Valuations of 10- and 90-day Global Codes

Historically, our attempts to adjust RVUs for global services based on changes in the typical resource costs (especially with regard to site of service assumptions or changes to the number of post-surgery visits) have been difficult and controversial. At least in part, this is because the relationship between the work RVUs for the 10- and 90-day global codes (which includes the work RVU associated with the procedure itself) and the number of included post-operative visits in the existing values is not always clear. Some services with global periods have been valued by adding the work RVU of the surgical procedure and all pre- and post-operative E/M services included in the global period. However, in other cases, as many stakeholders have noted, the total work RVUs for surgical procedures and post-operative visits in global periods are estimated as a single value without any explicit correlation to the time and intensity values for the individual service components. Although we would welcome more objective information to improve our determination of the ''typical'' case, we believe that even if we engaged in the collection of better data on the number and level of E/M services typically furnished during the global periods for global surgery services, the valuation of individual codes with post-operative periods would not be straightforward. Furthermore, we believe it would be important to frequently update the data on the number and level of visits furnished during the post-operative periods in order to account for any changes in the patient population, medical practice, or business arrangements. Although such information would be available for developing payment rates for bundled services through other Medicare payment systems, practitioners paid through the PFS do not report such data.

(4) Unwarranted Payment Disparities

Subsequent to our last comment solicitation regarding the valuation of the post-operative periods (77 FR 68911 through 68913), some stakeholders have raised concerns that global surgery packages contribute to unwarranted payment disparities between practitioners who do and do not furnish these services. These stakeholders have addressed several ways the 10- and 90-day global packages may contribute to unwarranted payment disparities.

The stakeholders noted that, through the global surgery packages, Medicare pays practitioners who furnish E/M services during post-surgery periods regardless of whether the services are actually furnished, while practitioners who do not furnish global procedures with post-operative visits are only paid for E/M services that are actually furnished. In some cases, it is possible that the practitioner furnishing the global surgery procedure may not furnish any post-operative visits. Although we have policies to address the situation when post-operative care is transferred from one practitioner to another, the beneficiary might simply choose to seek care from another practitioner without a formal transfer of care. The other practitioner would then bill Medicare separately for E/M services for which payment was included in the global payment to the original practitioner. Those services would not have been separately billable if furnished by the original practitioner.

These circumstances can lead to unwarranted payment differences, allowing some practitioners to receive payment for fewer services than reflected in the Medicare payment. Practitioners who do not furnish global surgery services bill and are paid only for each individual service furnished. When global surgery values are based on inaccurate assumptions about the typical services furnished in the post-operative periods, these payment disparities can contribute to differences in aggregate RVUs across specialties. Since the RVUs are intended to reflect differences in the relative resource costs involved in furnishing a service, any disparity between assumed and actual costs results not only in paying some practitioners for some services that are not furnished, it also skews relativity between specialties.

Stakeholders have also pointed out that payment disparities can arise because E/M services reflected in global periods generally include higher PE values than the same services when billed separately. The difference in PE values between separately billed visits and those included in global packages result primarily from two factors that are both inherent in the PFS pricing methodology.

First, there is a different mix of PE inputs (clinical labor/supplies/equipment) included in the direct PE inputs for a global period E/M service and a separately billed E/M service. For example, the clinical labor inputs for separately reportable E/M codes includes a staff blend listed as ''RN/LPN/MTA'' (L037D) and priced at $0.37 per minute. Instead of this input, some codes with post-operative visits include the staff type ''RN'' (L051A) priced at a higher rate of $0.51 per minute. For these codes, the higher resource cost may accurately reflect the typical resource costs associated with those particular visits. However, the different direct PE inputs may drive unwarranted payment disparities among specialties who report global surgery codes with post-operative periods and those that do not. The only way to correct these potential discrepancies under the current system, which result from the specialty-based differences in resource costs, would be to include standard direct PE inputs for these services regardless of whether or not the standard inputs are typical for the specialties furnishing the services.

Second, the indirect PE allocated to the E/M visits included in global surgery codes is higher than that allocated to separately furnished E/M visits. This occurs because the range of specialties furnishing a particular global service is generally not as broad as range of specialties that report separate individual E/M services. Since the specialty mix for a service is a key factor in determining the allocation of indirect PE to each code, a higher amount of indirect PE can be allocated to the E/M services that are valued as part of the global surgery codes than to the individual E/M codes. Practitioners who use E/M codes to report visits separately are paid based on PE RVUs that reflect the amount of indirect PE allocated across a wide range of specialties, which has the tendency to lower the amount of indirect PE. For practitioners who are paid for visits primarily through post-operative periods, indirect PE is generally allocated with greater specificity. Two significant steps would be required to alleviate the impact of this disparity. First, we would have to identify the exact mathematical relationship between the work RVU and the number and level of post-operative visits for each global code; and second, we would have to propose a significant alteration of the PE methodology in order to allocate indirect PE that does not correlate to the specialties reporting the code in the Medicare claims data.

Furthermore, stakeholders have pointed out that the PE RVUs for codes with 10- or 90-day post-operative periods reflect the assumption that all outpatient visits occur in the higher-paid non-facility office setting, when many of these visits are likely to be furnished in provider-based departments, which would be paid at the lower, PFS facility rate if they were billable separately. As we note elsewhere in this proposed rule, we do not have data on the volume of physicians' services furnished in provider-based departments, but public information suggests that it is not insignificant and that it is growing. When these services are paid as part of a global package, there is no adjustment made based on the site of service. Therefore, even though the PFS payment for services furnished in post-operative global periods might include clinical labor, disposable supply, and medical equipment costs (and additional indirect PE allocation) that are incurred by the facility and not the practitioner reporting the service, the RVUs for global codes reflect all of these costs associated with the visits.

(5) Incompatibility of Current Packages With Current Practice and Unreliability of RVUs for Use in New Payment Models

In addition to these issues, the 10- and 90-day global periods reflect a long-established but no longer exclusive model of post-operative care that assumes the same practitioner who furnishes the procedure typically furnishes the follow-up visits related to that procedure. In many cases, we believe that models of post-operative care are increasingly heterogeneous, particularly given the overall shift of patient care to larger practices or team-based environments.

We believe that RVUs used to establish PFS payments are likely to serve as critical building blocks to developing, testing, and implementing a number of new payment models, including those that focus on bundled payments to practitioners or payments for episodes of care. Therefore, we believe it is critical for us to ensure that the PFS RVUs accurately reflect the resource costs for individual PFS services instead of reflecting potentially skewed assumptions regarding the number of services furnished over a long period of time in the ''typical'' case. To the extent that the 10- and 90-day global periods reflect inaccurate assumptions regarding resource costs associated with individual PFS services,

we believe they are likely to be obstacles to a wide range of potential improvements to PFS payments, including the potential incorporation of payment bundling designed to foster efficiency and quality care for Medicare beneficiaries.

c. Proposed Transition of 10- and 90-Day Global Packages Into 0-Day Global Packages

Although we have marginally addressed some of the concerns noted above with global packages in previous rulemaking, we do not believe that we have made significant progress in addressing the fundamental issues with the 10- and 90-day post-operative global packages. In the context of the misvalued code initiative, we believe it is critical for the RVUs used to develop PFS payment rates reflect the most accurate resource costs associated with PFS services. Based on the issues discussed above, we do not believe we can effectively address the issues inherent in establishing values for the 10- and 90-day global packages under our existing methodologies and with available data. As such, we do not believe that maintaining the post-operative 10-and 90-day global periods is compatible with our continued interest in using more objective data in the valuation of PFS services and accurately valuing services relative to each other. Because the typical number and level of post-operative visits during global periods may vary greatly across Medicare practitioners and beneficiaries, we believe that continued valuation and payment of these face-to-face services as a multi-day package may skew relativity and create unwarranted payment disparities within PFS payment. We also believe that the resource based valuation of individual physicians' services will continue to serve as a critical foundation for Medicare payment to physicians, whether through the current PFS or in any number of new payment models. Therefore, we believe it is critical that the RVUs under the PFS be based as closely and accurately as possible on the actual resources involved in furnishing the typical occurrence of specific services

To address the issues discussed above, we are proposing to retain global bundles for surgical services, but to refine bundles by transitioning over several years all 10- and 90-day global codes to 0-day global codes. Medically reasonable and necessary visits would be billed separately during the pre- and post-operative periods outside of the day of the surgical procedure. We propose to make this transition for current 10-day global codes in CY 2017 and for the current 90-day global codes in CY 2018, pending the availability of data on which to base updated values for the global codes.

We believe that transitioning all 10- and 90-day global codes to 0-day global codes would:

- Increase the accuracy of PFS payment by setting payment rates for individual services based more closely upon the typical resources used in furnishing the procedures;
- Avoid potentially duplicative or unwarranted payments when a beneficiary receives post-operative care from a different practitioner during the global period;
- Eliminate disparities between the payment for E/M services in global periods and those furnished individually;
- Maintain the same-day packaging of pre- and post-operative physicians' services in the 0-day global; and
- Facilitate availability of more accurate data for new payment models and quality research.

As we transition these codes, we would need to establish RVUs that reflect the change in the global period for all the codes currently valued as 10- and 90-day global surgery services. We seek assistance from stakeholders on various aspects of this task. Prior to implementing these changes, we intend to gather objective data on the number of E/M and other services furnished during the current post-operative periods and use those data to inform both the valuation of particular services and the overall budget neutrality adjustments required to implement this proposal. We seek comment on the most efficient means of acquiring accurate data regarding the number of visits and other services actually being furnished by the practitioner during the current post-operative periods. For all the reasons stated above, we do not believe that survey data reflecting assumptions of the ''typical case'' meets the standards required to measure the resource costs of the wide range of services furnished during the post-operative periods. We acknowledge that collecting information on these services through claims submission may be the best approach, and we would propose such a collection through future rulemaking. However, we are also interested in alternatives. For example, we seek information on the extent to which individual practitioners or practices may currently maintain their own data on services furnished during the post-operative period, and how we might collect and objectively evaluate that data.

We also seek comment on the best means to ensure that allowing separate payment of E/M visits during post-operative periods does not incentivize otherwise unnecessary office visits during post-operative periods. If we adopt this proposal, we intend to monitor any changes in the utilization of E/M visits following its implementation but we are also seeking comment on potential payment policies that will mitigate such a change in behavior.

In developing this proposal, we considered several alternatives to the transformation of all global codes to 0-day global codes. First, we again considered the possibility of gathering data and using the data to revalue the 10- and 90- day global codes. While this option would have maintained the status quo in terms of reporting services, it would have required much of the same effort as this proposal without alleviating many of the problems associated with the 10- and 90-day global periods. For example, collecting accurate data would allow for more accurate estimates of the number and kind of visits included in the post-operative periods at the time of the survey. However, this alternative approach would only mitigate part of the potential for unwarranted payment disparities. For example, the values for the visits in the global codes would continue to include different amounts of PE RVUs than separately reportable visits and would continue to provide incentives to some practitioners to minimize patient visits. Additionally, it would not address the changes in practice patterns that we believe have been occurring whereby the physician furnishing the procedure is not necessarily the same physician conducting the post-procedure follow up.

This alternative option would also rest extensively on the effectiveness of using the new data to revalue the codes accurately. Given the unclear relationship between the assigned work RVUs and the post-operative visits across all of these services, incorporating objective data on the number of visits to adjust work RVUs would still necessitate extensive review of individual codes or families of codes by CMS and stakeholders, including the RUC. We believe the investment of resources for such an effort would be better made to solve a broader range of problems.

We also considered other possibilities, such as altering our PE methodology to ensure that the PE inputs and indirect PE for visits in the global period were valued the same as

separately reportable E/M codes or requiring reporting of the visits for all 10- and 90-day global services while maintaining the 10- and 90-day global period payment rates. However, we believe this option would require all of the same effort by practitioners, CMS, and other stakeholders without alleviating most of the problems addressed in the preceding paragraphs.

We also considered maintaining the status quo and identifying each of the 10- and 90-day global codes as potentially misvalued through our potentially misvalued code process for review as 10 and 90 day globals. Inappropriate valuations of these services has a major effect on the fee schedule due to the percentage of PFS dollars paid through 10- and 90-day global codes (3 percent and 11 percent, respectively), and thus, valuing them appropriately is critical to appropriate valuation and relativity throughout the PFS. Through the individual review approach, we could review the appropriateness of the global period and the accurate number of visits for each service. Yet revaluing all 3,000 global surgery codes through the potentially misvalued codes approach would not address many of the problems identified above. Unless such an effort was combined with changes in the PE methodology, it would only partially address the valuation and accuracy issues and would leave all the other issues unresolved. Moreover, the valuation and accuracy issues that could be addressed through this approach would rapidly be out of date as medical practice continues to change. Therefore, such an approach would be only partially effective and would impede our ability to address other potentially misvalued codes.

We seek stakeholder input on an accurate and efficient means to revalue or adjust the work RVUs for the current 10- and 90-day global codes to reflect the typical resources involved in furnishing the services including both the pre- and post-operative care on the day of the procedure. We believe that collecting data on the number and level of post-operative visits furnished by the practitioner reporting current 10-and 90-day global codes will be essential to ensuring work RVU relativity across these services. We also believe that these data will be necessary to determine the relationship between current work RVUs and current number of post-operative visits, within categories of codes and code families. However, we believe that once we collect those data, there are a wide range of possible approaches to the revaluation of the large number of individual global services, some of which may deviate from current processes like those undertaken by the RUC. To date, the potentially misvalued code initiative has focused on several hundred, generally high-volume codes per year. This proposal requires revaluing a larger number of codes over a shorter period of time and includes many services with relatively low volume in the Medicare population. Given these circumstances, it does not seem practical to survey time and intensity information on each of these procedures. Absent any new survey data regarding the procedures themselves, we believe that data regarding the number and level of post-service office visits can be used in conjunction with other methods of valuation, such as:

- Using the current potentially misvalued code process to identify and value the relatively small number of codes that represent the majority of the volume of services that are currently reported with codes with post-operative periods, and then adjusting the aggregate RVUs to account for the number of visits and using magnitude estimation to value the remaining services in the family;
- Valuing one code within a family through the current valuation process and then using magnitude estimation to value the remaining services in the family;
- Surveying a sample of codes across all procedures to create an index that could be used to value the remaining codes.

While we believe these are plausible options for the revaluation of these services, we believe there may be others. Therefore, we seek input on the best approach to achieve this proposed transition from 10- and 90-day, to 0-day global periods, including the timing of the changes, the means for revaluation, and the most effective and least burdensome means to collect objective, representative data regarding the actual number of visits currently furnished in the post-operative global periods. We also seek comment on whether the effective date for the transition to 0-day global periods should be staggered across families of codes or other categories. For example, while we are proposing to transition 10-day global periods in 2017 and 90-day global periods in 2018, we seek comment on whether we should consider implementing the transition more or less quickly and over one or several years. We also seek comment regarding the appropriate valuation of new, revised, or potentially misvalued 10- or 90-day global codes before implementation of this proposal.

5. Improving the Valuation of the Global Package

In the CY 2013 proposed rule, we sought comments on methods of obtaining accurate and current data on E/M services furnished as part of a global surgical package. In addition to receiving the broader comments on measuring post-operative work, we also received a comment from the RUC saying that the hospital inpatient and discharge day management services included in the global period for many surgical procedures were inadvertently removed from the time file in 2007. With its comment letter, the RUC sent us a data file with updated times for these post-operative visits for some services that displayed zero hospital inpatient or discharge day visits in the CMS time file. After extensive review, we concluded that the data were deleted from the time file due to an inadvertent error as noted by the RUC. Therefore, during CY 2014 PFS rulemaking we finalized a proposal to replace the missing postoperative hospital inpatient and discharge day visits for the more than 100 codes that were identified by the RUC.

Since then, the AMA has identified additional codes with data in the work time file that reflects a similar error. Since we believe these global surgery codes are missing postoperative hospital inpatient and discharge day visits due to an inadvertent error, we are proposing to include a corrected number of visits for the codes displayed in Table 11. This proposal would also alter the total time associated with the codes in the work time file.

TABLE 11—PROPOSED WORK TIME CHANGES IN SELECTED GLOBAL SURGICAL PACKAGE VISITS

CPT code	Short descriptor	Visits included in Global Package						CY 2014 time	CY 2015 time
		99231	99232	99233	99238	99291	99292		
19367	Breast reconstruction	3.00			1.00			552.00	590.00
20802	Replantation arm complete	6.00			1.00			1047.00	1041.00
20805	Replant forearm complete	6.00			1.00			1017.00	1012.00
20808	Replantation hand complete	5.00			1.00			1177.00	1112.00
20972	Bone/skin graft metatarsal	5.00			1.00			918.00	898.00
21137	Reduction of forehead				1.00			272.00	310.00
21138	Reduction of forehead				1.00			362.00	400.00
21150	Lefort ii anterior intrusion	1.00			1.00	1.00		542.00	623.00
21159	Lefort iii w/fhdw/o lefort i	3.00			1.00	2.00		784.00	986.00
21160	Lefort iii w/fhd w/lefort i		2.50		1.00	2.50		844.00	1121.00
21172	Reconstruct orbit/forehead		1.50		1.00	1.50		474.00	641.00
21175	Reconstruct orbit/forehead		1.00		1.00	2.00		767.00	731.00
21179	Reconstruct entire forehead				1.00	2.00		412.00	590.00
21180	Reconstruct entire forehead				1.00	2.00		492.00	670.00
21181	Contour cranial bone lesion	1.00			1.00			338.00	396.00
21182	Reconstruct cranial bone		1.00		1.00	2.00		856.00	801.00
21183	Reconstruct cranial bone		2.00		1.00	2.00		669.00	891.00
21184	Reconstruct cranial bone		2.00		1.00	2.00		774.00	996.00
22102	Remove part lumbar vertebra	3.00			1.00			392.00	387.00
22310	Closed tx vert fx w/o manj	3.50			1.00			167.00	236.00
28122	Partial removal of foot bone				1.00			230.00	249.00
33470	Revision of pulmonary valve	1.50			1.00	3.50		890.00	769.00
33471	Valvotomy pulmonary valve	4.00			1.00	1.00		603.00	572.00
33476	Revision of heart chamber				1.00	5.00		725.00	859.00
33478	Revision of heart chamber				1.00	5.00		740.00	882.00
33610	Repair by enlargement	7.00			1.00			770.00	648.00
33720	Repair of heart defect				1.00	4.00		633.00	770.00
33737	Revision of heart chamber	2.00			1.00	3.00		603.00	706.00
33755	Major vessel shunt	1.50			1.00	3.50		680.00	750.00
33762	Major vessel shunt	1.50			1.00	3.50		740.00	755.00
33766	Major vessel shunt	1.50			1.00	3.50		740.00	756.00
33775	Repair great vessels defect	0.50			1.00	6.50		860.00	1043.00
33776	Repair great vessels defect	1.50			1.00	6.50		950.00	1096.00
33777	Repair great vessels defect	3.50			1.00	4.50		950.00	993.00
33813	Repair septal defect	1.00			1.00	3.00		603.00	664.00
33814	Repair septal defect				1.00	5.00		710.00	838.00
33822	Revise major vessel				1.00	2.00		430.00	463.00
50360	Transplantation of kidney	1.00	2.00	2.00	1.00			664.00	774.00
61556	Incise skull/sutures	3.00	3.00	1.00	1.00			749.00	692.00
61558	Excision of skull/sutures	5.00			1.00			669.00	661.00
61559	Excision of skull/sutures	4.00			1.00			662.00	665.00
61563	Excision of skull tumor	1.00	2.00	1.00	1.00			762.00	656.00
61564	Excision of skull tumor	4.00			1.00			629.00	623.00
61580	Craniofacial approach skull		3.00	4.00	1.00	1.00		1313.30	1078.30
61581	Craniofacial approach skull	1.00	1.00	5.00	1.00	1.00		1419.40	1214.40
61582	Craniofacial approach skull	4.00	3.00	1.00	1.00	1.00		1185.30	1010.30
61583	Craniofacial approach skull	8.00		1.00	1.00	1.00		1100.40	906.40
61584	Orbitocranial approach/skull	2.00	3.00	2.00	1.00	1.00		1066.40	842.40
61585	Orbitocranial approach/skull	1.00	3.00	3.00	1.00	2.00		1377.70	1101.70
61590	Infratemporal approach/skull	1.00		7.00	1.00	2.00		1732.40	1418.40
61591	Infratemporal approach/skull	3.00	4.00		1.00	2.00		1478.85	1254.85
61592	Orbitocranial approach/skull	1.00	3.00	2.00	1.00	2.00		1256.80	1002.80
61595	Transtemporal approach/skull		3.00	4.00	1.00	1.00		1312.80	1077.80

TABLE 11—PROPOSED WORK TIME CHANGES IN SELECTED GLOBAL SURGICAL PACKAGE VISITS—Continued

CPT code	Short descriptor	Visits included in Global Package						CY 2014 time	CY 2015 time
		99231	99232	99233	99238	99291	99292		
61596	Transcochlear approach/skull	1.00	4.00	3.00	1.00	1.00		1442.30	1188.30
61597	Transcondylar approach/skull	5.00	2.00	1.00	1.00	2.00		1284.40	1041.40
61598	Transpetrosal approach/skull	2.00	3.00	1.00	1.00	2.00		1253.10	1048.10
61600	Resect/excise cranial lesion			6.00	1.00	1.00		1328.40	1101.40
61601	Resect/excise cranial lesion	2.00	2.00	2.00	1.00	2.00		1078.90	854.90
61605	Resect/excise cranial lesion	3.00	2.00	1.00	1.00	2.00		1238.60	1052.60
61606	Resect/excise cranial lesion	3.00	3.00	1.00	1.00	2.00		1161.90	926.90
61607	Resect/excise cranial lesion		1.00	6.00	1.00	2.00		1526.20	1201.20
61608	Resect/excise cranial lesion	3.00	3.00	2.00	1.00	2.00		1326.00	1042.00
61613	Remove aneurysm sinus	1.00		6.00	1.00	2.00		1416.00	1102.00
61615	Resect/excise lesion skull	2.00	4.00	2.00	1.00	1.00		1327.20	1092.20
61616	Resect/excise lesion skull	5.00	2.00	1.00	1.00	2.00		1329.80	1116.80
61618	Repair dura		1.00	2.00	1.00			647.10	573.10
61619	Repair dura	1.00	2.00	1.00	1.00			683.60	587.60
62115	Reduction of skull defect	4.50			1.00			672.00	678.00
62116	Reduction of skull defect	1.00	2.00	1.00	1.00			737.00	616.00
62117	Reduction of skull defect		2.00	2.00	1.00			854.00	714.00
62120	Repair skull cavity lesion	3.00			1.00			512.00	523.00

6. Valuing Services That Include Moderate Sedation as an Inherent Part of Furnishing the Procedure

The CPT manual includes more than 300 diagnostic and therapeutic procedures, listed in Appendix G, for which CPT has determined that moderate sedation is an inherent part of furnishing the procedure and, therefore, only the single procedure code is appropriately reported when furnishing the service and the moderate sedation. The work of moderate sedation has been included in the work RVUs for these diagnostic and therapeutic procedures based upon their inclusion in Appendix G. Similarly, the direct PE inputs for these services include those inputs associated with furnishing a typical moderate sedation service. To the extent that moderate sedation is typically furnished as part of the diagnostic or therapeutic service, the inclusion of moderate sedation in the valuation of the procedure is appropriate.

It appears that practice patterns for endoscopic procedures are changing, and anesthesia is increasingly being separately reported for these procedures. For example, one study shows that while the use of a separate anesthesia professional for colonoscopies and upper endoscopies was just 13.5 percent in 2003, the rate more than doubled to 30.2 percent in 2009. An analysis of Medicare claims data shows that a similar pattern is occurring in the Medicare program. We find that, for certain types of procedures such as digestive surgical procedures, a separate anesthesia service is furnished 53 percent of the time. For some of these digestive surgical procedures, the claims analysis shows that this rate is as high as 80 percent.

Our data clearly indicate that moderate sedation is no longer typical for all of the procedures listed in CPT's Appendix G, and, in fact, the data suggest that the percent of cases in which it is used is declining. For many of these procedures in Appendix G, moderate sedation continues to be furnished. The trend away from the use of moderate sedation toward a separately billed anesthesia service is not universal. It differs by the class of procedures, sometimes at the procedure code level, and is one that continues to evolve over time. Due to the changing nature of medical practice in this area, we are considering establishing a uniform approach to valuation for all Appendix G services for which moderate sedation is no longer inherent, rather than addressing this issue at the procedure level as individual procedures are revalued.

We are seeking public comment on approaches to address the appropriate valuation of these services. Specifically, we are interested in approaches to valuing Appendix G codes that would allow Medicare to pay accurately for moderate sedation when it is furnished while avoiding potential duplicative payments when separate anesthesia is furnished and billed. To the extent that Appendix G procedure values are adjusted to no longer include moderate sedation, we request suggestions as to how moderate sedation should be reported and valued, and how to remove from existing valuations the RVUs and inputs related to moderate sedation.

We note that in the CY 2014 PFS final rule with comment period, we established values for many upper gastrointestinal procedures, 58 of which were included in Appendix G. For those interim final values, we included the inputs related to moderate sedation. In the CY 2015 PFS final rule with comment period, we will address these interim final values, and we anticipate establishing CY 2015 inputs for the lower gastrointestinal procedures, many of which are also listed in Appendix G. It is our expectation that we will not change existing policies for valuing moderate sedation as inherent in these procedures until we have the opportunity to assess and respond to the comments on this proposed rule on the overall valuation of Appendix G codes.

C. Malpractice Relative Value Units (RVUs)

1. Overview

Section 1848(c) of the Act requires that each service paid under the PFS be comprised of three components: Work; PE; and malpractice (MP) expense. As required by section 1848(c) of the Act, beginning in CY 2000, MP RVUs are resource based. Malpractice RVUs for new codes after 1991 were extrapolated from similar existing codes or as a percentage of the corresponding work RVU. Section 1848(c)(2)(B)(i) of the Act also requires that we review, and if necessary adjust, RVUs no less often than every 5 years. For CY 2015, we are proposing to implement the third comprehensive review and update of MP RVUs. For details about prior updates, see the CY 2010 final rule with comment period (74 FR 33537).

2. Methodology for the Proposed Revision of Resource-Based Malpractice RVUs

a. General Discussion

The proposed MP RVUs were calculated by a CMS contractor based on updated MP premium data obtained from state insurance rate filings. The methodology used in calculating the proposed CY 2015 review and update of resource-based MP RVUs largely parallels the process used in the CY 2010 update. The calculation requires using information on specialty-specific MP premiums linked to a specific service based upon the relative risk factors of the various specialties that furnish a particular service. Because MP premiums vary by state and specialty, the MP premium information must be weighted geographically and by specialty. Accordingly, the proposed MP RVUs are based upon three data sources: CY 2011 and CY 2012 MP premium data; CY 2013 Medicare payment and utilization data; and CY 2015 proposed work RVUs and geographic practice cost indices (GPCIs).

Similar to the previous update, we calculated the proposed MP RVUs using specialty-specific MP premium data because they represent the actual expense incurred by practitioners to obtain MP insurance. We obtained MP premium data primarily from state departments of insurance. When the state insurance departments did not provide data, we used state rate filing data from the Perr and Knight database, which derives its data from state insurance departments. We used information obtained from MP insurance rate filings with effective dates in 2011 and 2012. These were the most current data available during our data collection process.

We collected MP insurance premium data from all 50 States, the District of Columbia, and Puerto Rico. Rate filings were not available in American Samoa, Guam, or the Virgin Islands. Premiums were for $1 million/$3 million, mature, claims-made policies (policies covering claims made, rather than those covering services furnished, during the policy term). A $1 million/$3 million liability limit policy means that the most that would be paid on any claim is $1 million and the most that the policy would pay for claims over the timeframe of the policy is $3 million. We made adjustments to the premium data to reflect mandatory surcharges for patient compensation funds (funds to pay for any claim beyond the statutory amount, thereby limiting an individual physician's liability in cases of a large suit) in states where participation in such funds is mandatory. We attempted to collect premium data representing at least 50 percent of the medical MP premiums paid.

We included premium information for all physician and NPP specialties, and all risk classifications available in the collected rate filings. Most insurance

companies provided crosswalks from insurance service office (ISO) codes to named specialties. We matched these crosswalks to Medicare primary specialty designations (specialty codes). We also used information we obtained regarding surgical and nonsurgical classes. Some companies provided additional surgical subclasses; for example, distinguishing family practice physicians who furnish obstetric services from those who do not.

Although we collected premium data from all states and the District of Columbia, not all specialties had premium data in the rate filings from all states. Additionally, for some specialties, MP premiums were not available from the rate filings in any state. Therefore, for specialties for which there was not premium data for at least 35 states, and specialties for which there was not distinct premium data in the rate filings, we crosswalked the specialty to a similar specialty, conceptually or by available premium data, for which we did have sufficient and reliable data. Additionally, we crosswalked three specialties—physician assistant, registered dietitian and optometry—for which we had data from at least 35 states to a similar specialty type because the available data contained such extreme variations in premium amounts that we found it to be unreliable. The range in premium amounts for registered dietitians is $85 to $20,813 (24,259 percent), for physician assistants is $614 to $35,404 (5,665 percent), and for optometry is $189 to $10,798 (5,614 percent). Given that the national average premium amount for registered dietitians, physician assistants and optometry is below the national average premium amount for allergy and immunology, we crosswalked these specialties to allergy and immunology, the specialty with the lowest premiums for which we had sufficient and reliable data.

For the proposed CY 2015 MP RVU update, sufficient and reliable premium data were available for 41 specialty types, which we used to develop specialty-specific malpractice risk factors. (See Table 13 for a list of these specialties.)

For specialties with insufficient or unreliable premium data, we assigned the premium amounts of a similar specialty type. These specialties and the specialty data that we propose to use are shown in Table 12.

TABLE 12—CROSSWALK OF SPECIALTIES TO SIMILAR SPECIALTIES

Specialty code	Medicare specialty name	Crosswalk specialty code	Crosswalk specialty
09	Interventional Pain Management	05	Anesthesiology.
12	Osteopathic Manipulative Medicine	03	Allergy Immunology.
15	Speech Language Pathology	03	Allergy Immunology.
17	Hospice and Palliative Care	03	Allergy Immunology.
19	Oral Surgery (dental only)	24	Plastic and Reconstructive Surgery.
21	Cardiac Electrophysiology	06	Cardiology.
23	Sports Medicine	01	General Practice.
27	Geriatric Psychiatry	26	Psychiatry.
32	Anesthesiologist Assistant	05	Anesthesiology.
35	Chiropractic	03	Allergy Immunology.
41	Optometry	03	Allergy Immunology.
42	Certified Nurse Midwife	16	Obstetrics Gynecology.
43	Certified Registered Nurse Anesthetist	05	Anesthesiology.
50	Nurse Practitioner	01	General Practice.
60	Public Health or Welfare Agency	03	Allergy Immunology.
62	Psychologist	03	Allergy Immunology.
64	Audiologist	03	Allergy Immunology.
65	Physical Therapist	03	Allergy Immunology.
67	Occupational Therapist	03	Allergy Immunology.
68	Clinical Psychologist	03	Allergy Immunology.
71	Registered Dietitian/Nutrition Professional	03	Allergy Immunology.
72	Pain Management	05	Anesthesiology.
76	Peripheral Vascular Disease	77	Vascular Surgery.
79	Addiction Medicine	03	Allergy Immunology.
80	Licensed Clinical Social Worker	03	Allergy Immunology.
83	Hematology/Oncology	90	Medical Oncology.
85	Maxillofacial Surgery	24	Plastic and Reconstructive Surgery.
86	Neuropsychiatry	26	Psychiatry.
89	Certified Clinical Nurse Specialist	01	General Practice.
91	Surgical Oncology	02	General Surgery.
94	Interventional Radiology	30	Diagnostic Radiology.
97	Physician Assistant	03	Allergy Immunology.
98	Gynecological/Oncology	16	Obstetrics Gynecology.
99	Unknown Physician Specialty	01	General Practice.
C0	Sleep Medicine	01	General Practice.

b. Steps for Calculating Proposed Malpractice RVUs

Calculation of the proposed MP RVUs conceptually follows the specialty-weighted approach used in the CY 2010 final rule with comment period (74 FR 61758). The specialty-weighted approach bases the MP RVUs for a given service upon a weighted average of the risk factors of all specialties furnishing the service. This approach ensures that all specialties furnishing a given service are accounted for in the calculation of the MP RVUs. The steps for calculating the proposed MP RVUs are described below.

Step (1): Compute a preliminary national average premium for each specialty.

Insurance rating area MP premiums for each specialty are mapped to the

county level. The specialty premium for each county is then multiplied by the total county RVUs for that specialty (from the Medicare claims data for CY 2013). The product of the MP premiums and total county RVUs is then summed across all counties for each specialty and then divided by total national RVUs for the specialty. This calculation is then divided by the average MP GPCI across all counties for each specialty to yield a normalized national average premium for each specialty. The specialty premiums are normalized for geographic variation so that the locality cost differences (as reflected by the GPCIs) would not be counted twice. Without the geographic variation adjustment, the cost differences among fee schedule areas would be reflected once under the methodology used to calculate the MP RVUs and again when computing the service specific payment amount for a given fee schedule area.

Step (2): Determine which premium class(es) to use within each specialty.

Some specialties had premium rates that differed for surgery, surgery with obstetrics, and non-surgery. To account for the presence of different classes in the MP premium data and the task of mapping these premiums to procedures, we calculated distinct risk factors for surgical, surgical with obstetrics, and nonsurgical procedures. However, the availability of data by surgery and nonsurgery varied across specialties. Consistent with the CY 2010 MP RVU update, because no single approach accurately addressed the variability in premium classes among specialties, we employed several methods for calculating average premiums by specialty. These methods are discussed below.

(a) *Substantial Data for Each Class:* For 13 out of 41 specialties, we determined that there was sufficient data for surgery and nonsurgery premiums, as well as sufficient differences in rates between classes. These specialties are listed in Table 13. Therefore, we calculated a national average surgical premium and nonsurgical premium.

(b) *Major Surgery Dominates:* For 9 surgical specialties, rate filings that included nonsurgical premiums were relatively rare. For most of these surgical specialties, the rate filings did not include an ''unspecified'' premium. When it did, the unspecified premium was lower than the major surgery rate. For these surgical specialties, we calculated only a surgical premium and used the premium for major surgery for all procedures furnished by this specialty.

(c) *Unspecified Dominates:* Many MP rate filings did not include surgery or nonsurgery classes for some specialties; we refer to these instances as unspecified MP rates. For 7 specialty types (listed in Table 13), we selected the unspecified premium as the premium information to use for the specialty. For these specialties, at least 35 states (and as many as 48 states) had MP premium amounts that were not identified as surgery or nonsurgery in rate filings for the specialty.

(d) *Blend All Available:* For the remaining specialties, there was wide variation across the rate filings in terms of whether or not premium classes were reported and which categories were reported. Because there was no clear strategy for these remaining specialties, we blended the available rate information into one general premium rate. For these specialties, we developed a weighted average ''blended'' premium at the national level, according to the percentage of work RVUs correlated with the premium classes within each specialty. For example, the surgical premiums for a given specialty were weighted by that specialty's work RVUs for surgical services; the nonsurgical premiums were weighted by the work RVUs for nonsurgical services and the unspecified premiums were weighted by all work RVUs for the specialty type.

The four methods for calculating premiums by specialty type are summarized in Table 13. (See Table 14: ''Risk Factors by Specialty Type'' for the specialty names associated with the specialty codes listed in Table 13.)

TABLE 13—PROPOSED PREMIUM CALCULATION APPROACH BY SPECIALTY TYPE

Method	Medicare specialty codes
(a) Substantial Data for Each Class (13)	01, 04, 06, 07, 08 (non-OB), 10, 13, 18, 34, 38, 39, 46, 93
(b) Major Surgery Dominates (9)	02, 14, 20, 24, 28, 33, 40, 77, 78
(c) Unspecified Dominates (7)	03, 05, 16 (non-OB), 25, 26, 36, 81
(d) Blend All Available (12)	11, 22, 29, 30, 37, 44, 48, 66, 82, 84, 90, 92

(e) *Premium Calculation for Neurosurgery:* For neurosurgery, premium data were available from 24 states; therefore, we did not have sufficient data to calculate a national average premium amount for neurosurgery. As explained above, we typically crosswalk a specialty with insufficient premium data (less than 35 states) to a similar specialty for which we have sufficient data, conceptually or by reported premiums. We considered cross-walking neurosurgery directly to the national average premium for a similar specialty that had sufficient data such as neurology or to another surgical specialty. We did not crosswalk neurosurgery directly to another surgical specialty because no other surgical specialty had similar premium values reported in the rate filings. For instance, the surgical premium for neurosurgery is $123,400 while the surgical premium for the next highest surgical specialty (surgical oncology) is $59,808. We also did not crosswalk neurosurgery directly to neurology because the rate filings for neurology include substantial premium data for both surgery and non-surgery while the rate filings for neurosurgery are dominated by major surgery premiums. We do not believe that it would be appropriate to assign non-surgical premiums reported for neurology to neurosurgery.

However, the national average *surgical* premium amount for neurology ($96,970) and the surgical premium amount for neurosurgery are similar. Therefore, we blended the surgical premium data for neurology and neurosurgery instead of crosswalking directly to neurology or directly to another surgical specialty. In other words, we calculated a combined national average surgical premium for neurosurgery and neurology. The reasons as to why we are proposing to blend surgical premiums for neurology and neurosurgery, instead of crosswalking neurosurgery directly to neurology or directly to another surgical specialty, are further explained below.

- The rate filings for neurosurgery are dominated by major surgery premiums.
- The rate filings identifying nonsurgical premiums for neurosurgery are sparse.
- The rate filings for neurology include substantial premium data for both surgery and nonsurgery.

• Neurology is similar to neurosurgery both conceptually and by reported surgical premium amounts.

• Surgical premiums from the rate filings for other surgical specialties are lower than for neurosurgery and neurology.

Given that the rate filings for neurosurgery are dominated by major surgical premiums and that surgical premium amounts for neurology are similar to neurosurgery, we believe that combining the surgical premium data for neurosurgery and neurology is a better representation of the MP premium amounts paid by neurosurgeons than crosswalking neurosurgery directly to neurology or to another surgical specialty.

Step (3): Calculate a risk factor for each specialty.

The relative differences in national average premiums between specialties are expressed in our methodology as a specialty risk factor. These risk factors are an index calculated by dividing the national average premium for each specialty by the national average premium for the specialty with the lowest premiums for which we had sufficient and reliable data, allergy and immunology. For specialties with sufficient surgical and nonsurgical premium data, we calculated both a surgical and nonsurgical risk factor. For specialties with rate filings that distinguished surgical premiums with obstetrics from those without, we calculated a separate surgical with obstetrics risk factor. For all other specialties we calculated a single risk factor and applied the specialty risk factor to both surgery and nonsurgery services.

We note that for determining the risk factor for suppliers of TC-only services, we were not able to obtain more recent premium data than what was used for the CY 2010 update. Therefore, we updated the premium data for IDTFs that we used in the CY 2010 update. These data were obtained from a survey conducted by the Radiology Business Management Association (RBMA) in 2009. We updated the RBMA survey data by the change in non-surgical premiums for all specialty types since the previous MP RVU update and calculated an updated TC specialty risk factor. We applied the updated TC specialty risk factor to suppliers of TC-only services. Table 14 shows the risk factors by specialty type.

TABLE 14—RISK FACTORS BY SPECIALTY TYPE

Specialty code	Medicare specialty name	Non-surgical risk factor	Surgical risk factor
01	General Practice	1.83	4.11
02	General Surgery		7.30
03	Allergy Immunology	1.00	1.00
04	Otolaryngology	1.95	4.47
05	Anesthesiology	2.42	2.42
06	Cardiology	2.11	7.10
07	Dermatology	1.25	4.11
08	Family Practice	1.77	4.18
08 OB	Family Practice w/OB		3.95
09	Interventional Pain Management	2.42	2.42
10	Gastroenterology	2.16	4.45
11	Internal Medicine	2.07	2.07
12	Osteopathic Manipulative Medicine	1.00	1.00
13	Neurology	2.59	13.04
14	Neurosurgery		13.04
15	Speech Language Pathology	1.00	1.00
16	Obstetrics Gynecology	3.80	3.80
16 OB	Obstetrics Gynecology w/OB		8.05
17	Hospice and Palliative Care	1.00	1.00
18	Ophthalmology	1.22	2.21
19	Oral Surgery (dental only)		5.11
20	Orthopedic Surgery		6.38
21	Cardiac Electrophysiology	2.11	7.10
22	Pathology	1.79	1.79
23	Sports Medicine	1.83	4.11
24	Plastic and Reconstructive Surgery		5.11
25	Physical Medicine and Rehabilitation	1.39	1.39
26	Psychiatry	1.13	1.13
27	Geriatric Psychiatry	1.13	1.13
28	Colorectal Surgery (formerly Proctology)		4.08
29	Pulmonary Disease	2.33	2.33
30	Diagnostic Radiology	2.99	2.99
32	Anesthesiologist Assistant	2.42	2.42
33	Thoracic Surgery		7.27
34	Urology	1.61	3.39
35	Chiropractic	1.00	1.00
36	Nuclear Medicine	1.41	1.41
37	Pediatric Medicine	1.82	1.82
38	Geriatric Medicine	1.78	4.83
39	Nephrology	1.71	4.27
40	Hand Surgery		4.71
41	Optometry	1.00	1.00
42	Certified Nurse Midwife	3.80	3.80
42 OB	Certified Nurse Midwife w/OB		8.05
43	Certified Registered Nurse Anesthetist (CRNA)	2.42	2.42
44	Infectious Disease	2.41	2.41
45	Mammography Screening Center	0.90	

TABLE 14—RISK FACTORS BY SPECIALTY TYPE—Continued

Specialty code	Medicare specialty name	Non-surgical risk factor	Surgical risk factor
46	Endocrinology	1.65	4.23
47	Independent Diagnostic Testing Facility	0.90	
48	Podiatry	2.22	2.22
50	Nurse Practitioner	1.83	4.11
60	Public Health or Welfare Agency	1.00	1.00
62	Psychologist	1.00	1.00
63	Portable X-Ray Supplier	0.90	
64	Audiologist	1.00	1.00
65	Physical Therapist	1.00	1.00
66	Rheumatology	1.77	1.77
67	Occupational Therapist	1.00	1.00
68	Clinical Psychologist	1.00	1.00
69	Clinical Laboratory	0.90	
71	Registered Dietitian/Nutrition Professional	1.00	1.00
72	Pain Management	2.42	2.42
74	Radiation Therapy Center	0.90	
75	Slide Preparation Facilities	0.90	
76	Peripheral Vascular Disease		7.19
77	Vascular Surgery		7.19
78	Cardiac Surgery		7.23
79	Addiction Medicine	1.00	1.00
80	Licensed Clinical Social Worker	1.00	1.00
81	Critical Care (Intensivists)	2.83	2.83
82	Hematology	1.81	1.81
83	Hematology/Oncology	1.89	1.89
84	Preventive Medicine	1.44	1.44
85	Maxillofacial Surgery		5.11
86	Neuropsychiatry	1.13	1.13
89	Certified Clinical Nurse Specialist	1.83	4.11
90	Medical Oncology	1.89	1.89
91	Surgical Oncology		7.30
92	Radiation Oncology	2.36	2.36
93	Emergency Medicine	3.29	5.17
94	Interventional Radiology	2.99	2.99
97	Physician Assistant	1.00	1.00
98	Gynecological/Oncology	3.80	3.80
98 OB	Gynecological/Oncology w/OB		8.05
99	Unknown Physician Specialty	1.83	4.11
C0	Sleep Medicine	1.83	4.11
TC	IDTFs (TC only)	0.90	

(a) Invasive Cardiology: Consistent with the previous MP RVU update, we continued to classify invasive cardiology services (cardiac catheterizations and angioplasties) that are outside of the surgical HCPCS code range as surgery for purposes of assigning specialty-specific risk factors. We note that since the previous MP RVU update some invasive cardiology service HCPCS codes have been revised. Therefore, we modified the list of invasive cardiology services outside the surgical HCPCS code range that are to be considered surgery in order to correspond conceptually to the list of service codes used for the CY 2010 MP RVU update. We continue to believe that the malpractice risk for cardiac catheterization and angioplasty services are more similar to the risk of surgical procedures than most nonsurgical service codes. As such, we applied the higher cardiology surgical risk factor to cardiology catheterization and angioplasty services.

For the CY 2015 MP RVU update, we examined the possibility of classifying injection procedures used in conjunction with cardiac catheterization as surgery (for purposes of assigning service specific risk factors). After careful consideration, we believe that injection procedures, when furnished in conjunction with cardiac catheterization, are more akin to the malpractice risk of surgical procedures than most non-surgical services. Therefore we applied the surgical risk factor to injection procedures used in conjunction with cardiac catheterization. Table 15 shows the invasive cardiology services and injection services furnished in conjunction with cardiac catheterization to be considered as surgery for purposes of assigning specialty-specific risk factors.

TABLE 15—SERVICES OUTSIDE OF SURGICAL HCPCS CODE RANGE CONSIDERED SURGERY

HCPCS code	Short descriptor
92920	Prq cardiac angioplast 1 art.
92921	Prq cardiac angio addl art.
92924	Prq card angio/athrect 1 art.
92925	Prq card angio/athrect addl.
92928	Prq card stent w/angio 1 vsl.
92929	Prq card stent w/angio addl.
92933	Prq card stent/ath/angio.
92934	Prq card stent/ath/angio.
92937	Prq revasc byp graft 1 vsl.
92938	Prq revasc byp graft addl.
92941	Prq card revasc mi 1 vsl.
92943	Prq card revasc chronic 1vsl.
92944	Prq card revasc chronic addl.
92970	Cardioassist internal.
92971	Cardioassist external.
92973	Prq coronary mech thrombect.
92974	Cath place cardio brachytx.
92975	Dissolve clot heart vessel.
92977	Dissolve clot heart vessel.
92978	Intravasc us heart add-on.

TABLE 15—SERVICES OUTSIDE OF SURGICAL HCPCS CODE RANGE CONSIDERED SURGERY—Continued

HCPCS code	Short descriptor
92979	Intravasc us heart add-on.
93451	Right heart cath.
93452	Left hrt cath w/ventrclgrphy.
93453	R&l hrt cath w/ventriclgrphy.
93454	Coronary artery angio s&i.
93455	Coronary art/grft angio s&i.
93456	R hrt coronary artery angio.
93457	R hrt art/grft angio.
93458	L hrt artery/ventricle angio.
93459	L hrt art/grft angio.
93460	R&l hrt art/ventricle angio.
93461	R&l hrt art/ventricle angio.
93462	L hrt cath trnsptl puncture.
93503	Insert/place heart catheter.
93505	Biopsy of heart lining.
93530	Rt heart cath congenital.
93531	R & l heart cath congenital.
93532	R & l heart cath congenital.
93533	R & l heart cath congenital.
93580	Transcath closure of asd.
93581	Transcath closure of vsd.
93582	Perq transcath closure pda.
93583	Perq transcath septal reduxn.
93600	Bundle of his recording.
93602	Intra-atrial recording.
93603	Right ventricular recording.
93609	Map tachycardia add-on.
93610	Intra-atrial pacing.
93612	Intraventricular pacing.
93613	Electrophys map 3d add-on.
93618	Heart rhythm pacing.
93619	Electrophysiology evaluation.
93620	Electrophysiology evaluation.
93621	Electrophysiology evaluation.
93622	Electrophysiology evaluation.
93623	Stimulation pacing heart.
93624	Electrophysiologic study.
93631	Heart pacing mapping.
93640	Evaluation heart device.
93641	Electrophysiology evaluation.
93642	Electrophysiology evaluation.
93650	Ablate heart dysrhythm focus.
93653	Ep & ablate supravent arrhyt.
93654	Ep & ablate ventric tachy.
93655	Ablate arrhythmia add on.
93656	Tx atrial fib pulm vein isol.
93657	Tx l/r atrial fib addl.
93563	Inject congenital card cath.
93564	Inject hrt congntl art/grft.
93565	Inject l ventr/atrial angio.
93566	Inject r ventr/atrial angio.
93567	Inject suprvlv aortography.
93568	Inject pulm art hrt cath.
93571	Heart flow reserve measure.
93572	Heart flow reserve measure.

Step (4): Calculate malpractice RVUs for each HCPCS code.

Resource-based MP RVUs were calculated for each HCPCS code that has work or PE RVUs. The first step was to identify the percentage of services furnished by each specialty for each respective HCPCS code. This percentage was then multiplied by each respective specialty's risk factor as calculated in Step 3. The products for all specialties for the HCPCS code were then added together, yielding a specialty-weighted service specific risk factor reflecting the weighted malpractice costs across all specialties furnishing that procedure. The service specific risk factor was multiplied by the greater of the work RVU or PE clinical labor index for that service to reflect differences in the complexity and risk-of-service between services.

(a) *Low volume service codes:* As discussed previously in this section, service-specific MP RVUs are determined based on the weighted average risk factor(s) of the specialties that furnish the service. For rarely-billed Medicare services (that is, when CY 2013 claims data reflected allowed services of less than 100), we used only the risk factor of the dominant specialty as reflected in our claims data. Approximately 2,000 services met the criteria for ''low volume.'' The dominant specialty for each ''low volume'' service was also determined from CY 2013 Medicare claims data. We continue to believe that a balanced approach between including all of the specialties in our claims data and the application of the dominant specialty for each low volume service is the most appropriate approach to the development of malpractice RVUs.

Step (5): Rescale for budget neutrality.

The statute requires that changes to fee schedule RVUs must be budget neutral. The current resource-based MP RVUs and the proposed resource-based MP RVUs were constructed using different malpractice premium data. Thus, the last step is to adjust for budget neutrality by rescaling the proposed MP RVUs so that the total proposed resource-based MP RVUs equal the total current resource-based MP RVUs.

The proposed resource-based MP RVUs are shown in Addendum B, which is available on the CMS Web site under the supporting documents section of the CY 2015 PFS rule at *http://www.cms.gov/PhysicianFeeSched/.* These values have been adjusted for budget neutrality on the basis of the most recent 2013 utilization data available. We will make a final budget neutrality adjustment in the final rule on the basis of the available 2013 utilization data at that time. We do not believe, however, that the final values will change significantly from the proposed values as a result of the final budget-neutrality adjustment.

Because of the differences in the sizes of the three fee schedule components, implementation of the resource-based MP RVU update will have much smaller payment effects than implementing updates of resource-based work RVUs and resource-based PE RVUs. On average, work represents about 50.9 percent of payment for a service under the fee schedule, PE about 44.8 percent, and MP about 4.3 percent. Therefore, a 25 percent change in PE RVUs or work RVUs for a service would result in a change in payment of about 11 to 13 percent. In contrast, a corresponding 25 percent change in MP values for a service would yield a change in payment of only about 1 percent. Estimates of the effects on payment by specialty type can be found in section VI. of this proposed rule.

Additional information on our proposed methodology for updating the MP RVUs may be found in our contractor's report, ''Report on the CY 2015 Update of the Malpractice RVUs,'' which is available on the CMS Web site. It is located under the supporting documents section of the CY 2015 PFS proposed rule located at *http://www.cms.gov/PhysicianFeeSched/.*

3. MP RVU Update for Anesthesia Services

Since payment for anesthesia services under the PFS is based upon a separate fee schedule, routine updates must be calculated in a different way than those for services for which payment is calculated based upon work, PE and MP RVUs. To apply certain updates to the anesthesia fee schedule, we usually develop proxy RVUs for individual anesthesia services. However, because work RVUs are integral to the MP RVU methodology and anesthesia services do not have work RVUs, the MP update process for anesthesia services is more complex than for services with work RVUs and clinical labor inputs. Notwithstanding these challenges, we believe that payment rates for anesthesia should reflect relative MP resource costs, including updates to reflect changes over time, as do other PFS payment rates. We are not proposing to include such an adjustment at this time because we believe it would be helpful to receive input from stakeholders on how we could address these challenges and develop a proposal to appropriately update the MP resource costs for anesthesia through future rulemaking. Therefore, we intend to propose an anesthesia adjustment for MP in the CY 2016 PFS proposed rule and are seeking comment in this rule about how to best do so.

An example of one possible approach would be to calculate imputed work RVUs and MP RVUs for the anesthesia fee schedule services using the work, PE, and MP shares of the anesthesia conversion factor. To reflect differences in the complexity and risk between

anesthesia fee schedule services we would then multiply the service-specific risk factor for each anesthesia fee schedule service by the imputed proxy work RVUs (both CY 2015 and Cy 2016 would be based on the same work RVUs) developed for each anesthesia service to determine updated proxy MP RVUs for the CY 2016 year. The aggregate difference between the imputed MP RVUs for CY 2015 the proxy MP RVUs for CY 2016 (both based on the same work RVUs) would be applied to the portion of the anesthesia conversion factor attributable to MP. However, we believe there may be drawbacks to this approach since it relies heavily on the proxy work and MP RVUs for individual anesthesia services. We are requesting public comments on this approach specifically, as well as comments on alternative approaches or methods for updating MP for services paid on the anesthesia fee schedule.

D. Geographic Practice Cost Indices (GPCIs)

1. Background

Section 1848(e)(1)(A) of the Act requires us to develop separate Geographic Practice Cost Indices (GPCIs) to measure relative cost differences among localities compared to the national average for each of the three fee schedule components (that is, work, PE, and MP). Although the statute requires that the PE and MP GPCIs reflect the full relative cost differences, section 1848(e)(1)(A)(iii) of the Act requires that the work GPCIs reflect only one-quarter of the relative cost differences compared to the national average. In addition, section 1848(e)(1)(G) of the Act sets a permanent 1.5 work GPCI floor for services furnished in Alaska beginning January 1, 2009, and section 1848(e)(1)(I) of the Act sets a permanent 1.0 PE GPCI floor for services furnished in frontier states (as defined in section 1848(e)(1)(I) of the Act) beginning January 1, 2011. Additionally, section 1848(e)(1)(E) of the Act provided for a 1.0 floor for the work GPCIs, which was set to expire on March 31, 2014. However, section 102 of the PAMA extended application of the 1.0 floor to the work GPCI through March 31, 2015.

Section 1848(e)(1)(C) of the Act requires us to review and, if necessary, adjust the GPCIs at least every 3 years. Section 1848(e)(1)(C) of the Act requires that ''if more than 1 year has elapsed since the date of the last previous adjustment, the adjustment to be applied in the first year of the next adjustment shall be ½ of the adjustment that otherwise would be made.'' We completed a review and finalized updated GPCIs in the CY 2014 PFS final rule with comment period (78 FR 74390). Since the last GPCI update had been implemented over 2 years, CY 2011 and CY 2012, we phased in ½ of the latest GPCI adjustment in CY 2014. We also revised the cost share weights that correspond to all three GPCIs in the CY 2014 PFS final rule. We calculated a corresponding geographic adjustment factor (GAF) for each PFS locality. The GAFs are a weighted composite of each area's work, PE and MP GPCIs using the national GPCI cost share weights. Although the GAFs are not used in computing the fee schedule payment for a specific service, we provide them because they are useful in comparing overall areas costs and payments. The actual effect on payment for any actual service will deviate from the GAF to the extent that the proportions of work, PE and MP RVUs for the service differ from those of the GAF.

As previously noted, section 102 of the PAMA extended the 1.0 work GPCI floor through March 31, 2015. Therefore, the CY 2015 work GPCIs and summarized GAFs have been revised to reflect the 1.0 work floor. Additionally, as required by sections 1848(e)(1)(G) and 1848(e)(1)(I) of the Act, the 1.5 work GPCI floor for Alaska and the 1.0 PE GPCI floor for frontier states are permanent, and therefore, applicable in CY 2015. See Addenda D and E for the CY 2015 GPCIs and summarized GAFs.

As discussed in the CY 2014 PFS final rule with comment period (78 FR 74380) the updated GPCIs were calculated by a contractor to CMS. We used updated Bureau of Labor and Statistics Occupational Employment Statistics (BLS OES) data (2009 through 2011) as a replacement for 2006 through 2008 data for purposes of calculating the work GPCI and the employee compensation component and purchased services component of the PE GPCI. We also used updated U.S. Census Bureau American Community Survey (ACS) data (2008 through 2010) as a replacement for 2006 through 2008 data for calculating the office rent component of the PE GPCI. To calculate the MP GPCI we used updated malpractice premium data (2011 and 2012) from state departments of insurance as a replacement for 2006 through 2007 premium data. We also noted that we do not adjust the medical equipment, supplies and other miscellaneous expenses component of the PE GPCI because we continue to believe there is a national market for these items such that there is not a significant geographic variation in relative costs. Additionally, we updated the GPCI cost share weights consistent with the modifications made to the 2006-based MEI cost share weights in the CY 2014 final rule. As discussed in the CY 2014 final rule with comment period, use of the revised GPCI cost share weights changed the weighting of the subcomponents within the PE GPCI (employee wages, office rent, purchased services, and medical equipment and supplies). For a detailed explanation of how the GPCI update was developed, see the CY 2014 final rule with comment period (78 FR 74380 through 74391).

2. Proposed Changes to the GPCI Values for the Virgin Islands Payment Locality

The current methodology for calculating locality level GPCIs relies on the acquisition of county level data (when available). Where data for a specific county are not available, we assign the data from a similar county within the same payment locality. The Virgin Islands have county level equivalents identified as districts. Specifically, the Virgin Islands are divided into 3 districts: Saint Croix; Saint Thomas; and Saint John. These districts are, in turn, subdivided into 20 sub-districts. Although the Virgin Islands are divided into these county equivalents, county level data for the Virgin Islands are not represented in the BLS OES wage data. Additionally, the ACS, which is used to calculate the rent component of the PE GPCI, is not conducted in the Virgin Islands, and we have not been able to obtain malpractice insurance premium data for the Virgin Islands payment locality. Given the absence of county level wage and rent data and the insufficient malpractice premium data by specialty type, we have historically set the three GPCI values for the Virgin Islands payment locality at 1.0.

For CY 2015, we explored using the available data from the Virgin Islands to more accurately reflect the geographic cost differences for the Virgin Islands payment locality as compared to other PFS localities. Although county level data for the Virgin Islands are not represented in the BLS OES wage data, aggregate territory level BLS OES wage data are available. We believe that using aggregate territory level data is a better reflection of the relative cost differences of operating a medical practice in the Virgin Islands payment locality as compared to other PFS localities than the current approach of assigning a value of 1.0. At our request, our contractor calculated the work GPCI, and the employee wage component and purchased services component of the PE

GPCI, for the Virgin Islands payment locality using aggregated 2009 through 2011 BLS OES data.

As discussed above, the ACS is not conducted in the Virgin Islands and we have not been able to obtain malpractice premium data for the Virgin Islands payment locality. Therefore, we assigned a value of 1.0 for the rent index of the PE GPCI and to the MP GPCI.

Table 16 illustrates the percentage change in GPCI values and summarized GAF for the Virgin Islands payment locality resulting from using BLS OES wage data to calculate the work GPCI and PE GPCI.

TABLE 16—IMPACT OF USING TERRITORY-LEVEL VIRGIN ISLANDS DATA ON GPCI VALUES FOR THE VIRGIN ISLANDS PAYMENT LOCALITY

GPCI/GAF	1/1/2015 through 3/31/2015 (with 1.0 work GPCI floor)			4/1/2015 through 12/31/2015 (without 1.0 work GPCI floor)		
	Existing CY 2015 GPCI values*	Proposed CY 2015 GPCI values	Percent change	Existing CY 2015 GPCI values*	Proposed CY 2015 GPCI values	Percent change
Work GPCI	1.000	1.000	0.00%	0.998	0.975	−2.30
PE GPCI	1.005	0.960	−4.48%	1.005	0.960	−4.48
MP GPCI	0.996	0.996	0.00%	0.996	0.996	0.00
GAF	1.002	0.982	−2.00%	1.001	0.969	−3.20

*CY 2015 GPCIs and GAF reflect CMS OACT BN adjustment.

Using aggregate territory-level BLS OES wage data results in a −2.3 percent decrease in the work GPCI, a −4.48 percent decrease in the PE GPCI, and a −3.2 percent decrease to the GAF for the Virgin Islands payment locality. However, with the application of the 1.0 work GPCI floor, there is no change to the work GPCI and the overall impact of using actual BLS OES wage data on the Virgin Islands payment locality is only reflected by the change in PE GPCI (−4.48 percent) resulting in a −2.00 percent decrease to the GAF. As mentioned previously in this section, since we have not been able to obtain malpractice premium data for the Virgin Islands payment locality we maintained the MP GPCI at 1.0. As such, there is no change in the MP GPCI. We propose to use aggregate BLS OES wage data to calculate the work GPCI and employee wage component of the PE GPCI for the Virgin Islands payment locality beginning for CY 2015, and for future GPCI updates. We are specifically requesting public comments on this proposal. Additional information on our proposal to calculate GPCI values for the Virgin Islands payment locality may be found in our contractor's report, ''Revised Final Report on the CY 2014 Update of the Geographic Practice Cost Index for the Medicare Physician Fee Schedule,'' which is available on the CMS Web site. It is located under the supporting documents section of the CY 2015 PFS proposed rule located at *http://www.cms.gov/PhysicianFeeSched/.*

E. Medicare Telehealth Services

1. Billing and Payment for Telehealth Services

Generally, for Medicare payments to be made for telehealth services under the PFS several conditions must be met. Specifically, the service must be on the Medicare list of telehealth services and meet all of the following other requirements for coverage:

- The service must be furnished via an interactive telecommunications system.
- The practitioner furnishing the service must meet the telehealth requirements, as well as the usual Medicare requirements.
- The service must be furnished to an eligible telehealth individual.
- The individual receiving the services must be in an eligible originating site.

When all of these conditions are met, Medicare pays an originating site fee to the originating site and provides separate payment to the distant site practitioner for furnishing the service.

Section 1834(m)(4)(F)(i) of the Act defines Medicare telehealth services to include consultations, office visits, office psychiatry services, and any additional service specified by the Secretary, when furnished via a telecommunications system. We first implemented this provision, which was effective October 1, 2001, in the CY 2002 PFS final rule with comment period (66 FR 55246). We established a process in the CY 2003 PFS final rule with comment period (67 FR 79988) for annual updates to the list of Medicare telehealth services as required by section 1834(m)(4)(F)(ii) of the Act.

As specified in regulations at § 410.78(b), we generally require that a telehealth service be furnished via an interactive telecommunications system. Under § 410.78(a)(3), an interactive telecommunications system is defined as multimedia communications equipment that includes, at a minimum, audio and video equipment permitting two-way, real-time interactive communication between the patient and distant site physician or practitioner. Telephones, facsimile machines, and electronic mail systems do not meet the definition of an interactive telecommunications system. An interactive telecommunications system is generally required as a condition of payment; however, section 1834(m)(1) of the Act allows the use of asynchronous ''store-and-forward'' technology when the originating site is part of a federal telemedicine demonstration program in Alaska or Hawaii. As specified in regulations at § 410.78(a)(1), store-and-forward means the asynchronous transmission of medical information from an originating site to be reviewed at a later time by the practitioner at the distant site.

Medicare telehealth services may be furnished to an eligible telehealth individual notwithstanding the fact that the practitioner furnishing the telehealth service is not at the same location as the beneficiary. An eligible telehealth individual means an individual enrolled under Part B who receives a telehealth service furnished at an originating site.

Practitioners furnishing Medicare telehealth services are reminded that the telehealth service provision is subject to the same non-discrimination laws as other services, including the effective communication requirements for persons with disabilities of section 504 of the Rehabilitation Act and language

access for persons with limited English proficiency, as required under Title VI of the Civil Rights Act of 1964. For more information, see *http://www.hhs.gov/ocr/civilrights/resources/specialtopics/hosptialcommunication.*

Practitioners furnishing Medicare telehealth services submit claims for telehealth services to the Medicare contractors that process claims for the service area where their distant site is located. Section 1834(m)(2)(A) of the Act requires that a practitioner who furnishes a telehealth service to an eligible telehealth individual be paid an amount equal to the amount that the practitioner would have been paid if the service had been furnished without the use of a telecommunications system.

Originating sites, which are defined as ''one of the specified sites where an eligible telehealth individual is located at the time the service is being furnished via a telecommunications system,'' are paid under the PFS for serving as an originating site for telehealth services. The statute specifies both the types of entities that can serve as originating sites and geographic qualifications for originating sites. With regard to geographic qualifications, our regulations at § 410.78 (b)(4) limit originating sites to those located in rural health professional shortage areas (HPSAs) or in a county that is not included in a metropolitan statistical areas (MSAs). Historically, we have defined rural HPSAs to be those located outside of, MSAs. Effective January 1, 2014, we modified the regulations regarding originating sites to define rural HPSAs as those located in rural census tracts as determined by the Office of Rural Health Policy (ORHP) of the Health Resources and Services Administration (HRSA) (78 FR 74811). Defining ''rural'' to include geographic areas located in rural census tracts within MSAs allows for broader inclusion of sites within HPSAs as telehealth originating sites. Adopting the more precise definition of ''rural'' for this purpose expands access to health care services for Medicare beneficiaries located in rural areas. HRSA has developed a Web site tool to provide assistance to potential originating sites to determine their geographic status. To access this tool, see the CMS Web site at *www.cms.gov/teleheath/.*

An entity participating in a federal telemedicine demonstration project that has been approved by, or received funding from, the Secretary as of December 31, 2000 is eligible to be an originating site regardless of its geographic location.

Effective January 1, 2014, we also changed our policy so that geographic eligibility for an originating site would be established and maintained on an annual basis, consistent with other telehealth payment policies (78 FR 74400). Geographic eligibility for Medicare telehealth originating sites for each calendar year is now based upon the status of the area as of December 31 of the prior calendar year.

For a detailed history of telehealth payment policy, see 78 FR 74399.

2. Adding Services to the List of Medicare Telehealth Services

As noted previously, in the December 31, 2002 **Federal Register** (67 FR 79988), we established a process for adding services to or deleting services from the list of Medicare telehealth services. This process provides the public with an ongoing opportunity to submit requests for adding services. We assign any qualifying request to make additions to the list of telehealth services to one of two categories. In the November 28, 2011 **Federal Register** (76 FR 73102), we finalized revisions to criteria that we use to review requests in the second category. The two categories are:

- *Category 1:* Services that are similar to professional consultations, office visits, and office psychiatry services that are currently on the list of telehealth services. In reviewing these requests, we look for similarities between the requested and existing telehealth services for the roles of, and interactions among, the beneficiary, the physician (or other practitioner) at the distant site and, if necessary, the telepresenter, a practitioner with the beneficiary in the originating site. We also look for similarities in the telecommunications system used to deliver the proposed service; for example, the use of interactive audio and video equipment.
- *Category 2:* Services that are not similar to the current list of telehealth services. Our review of these requests includes an assessment of whether the service is accurately described by the corresponding code when furnished via telehealth and whether the use of a telecommunications system to deliver the service produces demonstrated clinical benefit to the patient. In reviewing these requests, we look for evidence indicating that the use of a telecommunications system in furnishing the candidate telehealth service produces clinical benefit to the patient. Submitted evidence should include both a description of relevant clinical studies that demonstrate the service furnished by telehealth to a Medicare beneficiary improves the diagnosis or treatment of an illness or injury or improves the functioning of a malformed body part, including dates and findings, and a list and copies of published peer reviewed articles relevant to the service when furnished via telehealth. Our evidentiary standard of clinical benefit does not include minor or incidental benefits.

Some examples of clinical benefit include the following:

- Ability to diagnose a medical condition in a patient population without access to clinically appropriate in-person diagnostic services.
- Treatment option for a patient population without access to clinically appropriate in-person treatment options.
- Reduced rate of complications.
- Decreased rate of subsequent diagnostic or therapeutic interventions (for example, due to reduced rate of recurrence of the disease process).
- Decreased number of future hospitalizations or physician visits.
- More rapid beneficial resolution of the disease process treatment.
- Decreased pain, bleeding, or other quantifiable symptom.
- Reduced recovery time.

For the list of covered telehealth services, see the CMS Web site at *www.cms.gov/teleheath/.* Requests to add services to the list of Medicare telehealth services must be submitted and received no later than December 31 of each calendar year to be considered for the next rulemaking cycle. For example, qualifying requests submitted before the end of CY 2014 will be considered for the CY 2016 proposed rule. Each request to add a service to the list of Medicare telehealth services must include any supporting documentation the requester wishes us to consider as we review the request. Because we use the annual PFS rulemaking process as a vehicle for making changes to the list of Medicare telehealth services, requestors should be advised that any information submitted is subject to public disclosure for this purpose. For more information on submitting a request for an addition to the list of Medicare telehealth services, including where to mail these requests, see the CMS Web site at *www.cms.gov/telehealth/.*

3. Submitted Requests to the List of Telehealth Services for CY 2015

Under our existing policy, we add services to the telehealth list on a category 1 basis when we determine that they are similar to services on the existing telehealth list with respect to the roles of, and interactions among, the beneficiary, physician (or other practitioner) at the distant site and, if necessary, the telepresenter. As we

stated in the CY 2012 proposed rule (76 FR 42826), we believe that the category 1 criteria not only streamline our review process for publically requested services that fall into this category, the criteria also expedite our ability to identify codes for the telehealth list that resemble those services already on this list.

a. Submitted Requests

We received several requests in CY 2013 to add various services as Medicare telehealth services effective for CY 2015. The following presents a discussion of these requests, and our proposals for additions to the CY 2015 telehealth list. Of the requests received, we find that the following services are sufficiently similar to psychiatric diagnostic procedures or office/outpatient visits currently on the telehealth list to qualify on a category one basis. Therefore, we propose to add the following services to the telehealth list on a category 1 basis for CY 2015:

- CPT codes 90845 (Psychoanalysis); 90846 (family psychotherapy (without the patient present); and 90847 (family psychotherapy (conjoint psychotherapy) (with patient present);
- CPT codes 99354 (prolonged service in the office or other outpatient setting requiring direct patient contact beyond the usual service; first hour (list separately in addition to code for office or other outpatient evaluation and management service); and, 99355 (prolonged service in the office or other outpatient setting requiring direct patient contact beyond the usual service; each additional 30 minutes (list separately in addition to code for prolonged service); and,
- HCPCS codes G0438 (annual wellness visit; includes a personalized prevention plan of service (pps), initial visit; and, G0439 (annual wellness visit, includes a personalized prevention plan of service (pps), subsequent visit).

We also received requests to add services to the telehealth list that do not meet our criteria for being on the Medicare telehealth list. We are not proposing to add the following procedures for the reasons noted:

- CPT codes 92250 (fundus photography with interpretation and report); 93010 (electrocardiogram, routine ECG with at least 12 leads; interpretation and report only), 93307 (echocardiography, transthoracic, real-time with image documentation (2d), includes m-mode recording, when performed, complete, without spectral or color Doppler echocardiography; 93308 (echocardiography, transthoracic, real-time with image documentation (2d), includes m-mode recording, when performed, follow-up or limited study); 93320 (Doppler echocardiography, pulsed wave and/or continuous wave with spectral display (list separately in addition to codes for echocardiographic imaging); complete); 93321 (Doppler echocardiography, pulsed wave and/or continuous wave with spectral display (list separately in addition to codes for echocardiographic imaging); follow-up or limited study (list separately in addition to codes for echocardiographic imaging); and 93325 (Doppler echocardiography color flow velocity mapping (list separately in addition to codes for echocardiography).

These services include a technical component (TC) and a professional component (PC). By definition the TC portion of these services needs to be furnished in the same location as the patient and thus cannot be furnished via telehealth. The PC portion of these services could be furnished without the patient being present in the same location. (Note: Sometimes an entirely different code may be used when only the PC portion of the service is being furnished and other times the same CPT code is used with a –26 modifier.) For example, the interpretation by a physician of an actual electrocardiogram or electroencephalogram tracing that has been transmitted electronically, can be furnished without the patient being present in the same location as the physician. It is not necessary to consider including the PC of these services on the telehealth list for these services to be covered when furnished remotely. Moreover, when these services are furnished remotely they do not meet the definition of Medicare telehealth services under section 1834(m) of the Act. Rather, these remote services are considered physicians' services in the same way as services that are furnished in-person without the use of telecommunications technology; they are paid under the same conditions as in-person physicians' services (with no requirements regarding permissible originating sites), and should be reported in the same way as other physicians' services (that is, without the –GT or –GQ modifiers).

- CPT codes 96103 (psychological testing (includes psychodiagnostic assessment of emotionality, intellectual abilities, personality and psychopathology, eg, MMPI), administered by a computer, with qualified health care professional interpretation and report); and, 96120 (neuropsychological testing (eg, Wisconsin Card Sorting Test), administered by a computer, with qualified health care professional interpretation and report). These services involve testing by computer, can be furnished remotely without the patient being present, and are payable in the same way as other physicians' services. These remote services are not Medicare telehealth services as defined under the Act, therefore, telehealth restrictions do not apply to these services.
- CPT codes 90887 (interpretation or explanation of results of psychiatric, other medical examinations and procedures, or other accumulated data to family or other responsible persons, or advising them how to assist patient); 99090 (analysis of clinical data stored in computers (eg, ECGs, blood pressures, hematologic data); 99091 (collection and interpretation of physiologic data (eg, ECG, blood pressure, glucose monitoring) digitally stored and/or transmitted by the patient and/or caregiver to the physician or other qualified health care professional, qualified by education, training, licensure/regulation (when applicable) requiring a minimum of 30 minutes of time); 99358 (prolonged evaluation and management service before and/or after direct patient care; first hour); and 99359 (prolonged evaluation and management service before and/or after direct patient care; each additional 30 minutes (list separately in addition to code for prolonged service). These services are not separately payable by Medicare. It would be inappropriate to include services as telehealth services when Medicare does not otherwise make a separate payment for them.
- CPT codes 96101 (psychological testing (includes psychodiagnostic assessment of emotionality, intellectual abilities, personality and psychopathology, eg, MMPI, Rorschach, WAIS), per hour of the psychologist's or physician's time, both face-to-face time administering tests to the patient and time interpreting these test results and preparing the report); 96102 (psychological testing (includes psychodiagnostic assessment of emotionality, intellectual abilities, personality and psychopathology, eg, MMPI and WAIS), with qualified health care professional interpretation and report, administered by technician, per hour of technician time, face-to-face); 96118 (neuropsychological testing (eg, Halstead-Reitan Neuropsychological Battery, Wechsler Memory Scales and Wisconsin Card Sorting Test), per hour of the psychologist's or physician's time, both face-to-face time administering tests to the patient and time interpreting these test results and preparing the report); and, 96119 (neuropsychological testing (eg, Halstead-Reitan Neuropsychological

Battery, Wechsler Memory Scales and Wisconsin Card Sorting Test), with qualified health care professional interpretation and report, administered by technician, per hour of technician time, face-to-face). These services are not similar to other services on the telehealth list, as they require close observation of how a patient responds. The requestor did not submit evidence supporting the clinical benefit of furnishing these services on a category 2 basis. As such, we are not proposing to add these services to the list of telehealth services.

• CPT codes 57452 (colposcopy of the cervix including upper/adjacent vagina; 57454 colposcopy of the cervix including upper/adjacent vagina; with biopsy(s) of the cervix and endocervical curettage); and, 57460 (colposcopy of the cervix including upper/adjacent vagina; with loop electrode biopsy(s) of the cervix). These services are not similar to other services on the telehealth service list. Therefore, it would not be appropriate to add them on a category 1 basis. The requestor did not submit evidence supporting the clinical benefit of furnishing these services on a category 2 basis. As such, we are not proposing to add these services to the list of telehealth services.

• HCPCS code M0064 (brief office visit for the sole purpose of monitoring or changing drug prescriptions used in the treatment of mental psychoneurotic and personality disorders) is being deleted for CY 2015. This code was created specifically to describe a service that is not subject to the statutory outpatient mental health limitation, which limited payment amounts for certain mental health services. Section 102 of the Medicare Improvements for Patients and Providers Act (Pub. L. 110–275, enacted on July 15, 2008) (MIPPA) required that the 62.5 percent outpatient mental health treatment limitation, in effect since the inception of the Medicare program, be reduced over four years. This limitation limits the percentage of allowed charges that the Medicare program paid for mental health treatment services, thus creating a larger share of beneficiary coinsurance for these services than other Medicare PFS services. Effective January 1, 2014, the limitation percentage is 100 percent, of which Medicare pays 80 percent and the beneficiary pays 20 percent, resulting in the same beneficiary cost sharing as other PFS services. Since the statute was amended to phase out the limitation, and the phase-out was complete effective January 1, 2014, Medicare no longer has a need to distinguish services subject to the mental health limitation from those that are not. Accordingly, the appropriate CPT code can now be used to bill Medicare for the services that would have otherwise been reported using M0064 and M0064 will be eliminated as a telehealth service, effective January 1, 2015.

• Urgent Dermatologic Problems and Wound Care—The American Telehealth Association (ATA) cited several studies to support adding dermatology services to the telehealth list. However, the request did not include specific codes. Since we did not have specific codes to consider for this request, we cannot evaluate whether the services are appropriate for addition to the Medicare telehealth services list. We note that some of the services that the requester had in mind may be billed under the telehealth office visit codes or the telehealth consultation G–codes.

In summary, we are proposing to add the following codes to the telehealth list on a category 1 basis:

• Psychotherapy services CPT codes 90845, 90846 and 90847.

• Prolonged service office CPT codes 99354 and 99355.

• Annual wellness visit HCPCS codes G0438 and G0439.

3. Modifying § 410.78 Regarding List of Telehealth Services

As discussed in section II.E.2. of this proposed rule, under the statute, we created an annual process for considering the addition of services to the Medicare telehealth list. Under this process, we propose services to be added to the list in the proposed rule in response to public nominations or our own initiative and seek public comments on our proposals. After consideration of public comments, we finalize additions to the list in the final rule. We also amended the regulation at § 410.78(b) each year to include the description of the added services. Because the list of Medicare telehealth services has grown quite lengthy, and given the many other mechanisms by which we can make the public aware of the list of Medicare telehealth services for each year, we are proposing to revise § 410.78(b) by deleting the description of the individual services for which Medicare payment can be made when furnished via telehealth. We would continue our current policy to address requests to add to the list of telehealth services through the PFS rulemaking process so that the public would have the opportunity to comment on additions to the list. We are also proposing to revise § 410.78(f) to indicate that a list of Medicare telehealth codes and descriptors is available on the CMS Web site.

F. Valuing New, Revised and Potentially Misvalued Codes

Establishing valuations for newly created and revised CPT codes is a routine part of maintaining the PFS. Since its inception it has also been a priority to revalue services regularly to assure that the payment rates reflect the changing trends in the practice of medicine and current prices for inputs used in the PE calculations. Initially this was accomplished primarily through the five-year review process, which resulted in revised RVUs for CY 1997, CY 2002, CY 2007, and CY 2012. Under the five-year review process, revisions in RVUs were proposed in a proposed rule and finalized in a final rule. In addition to the five-year reviews, in each year beginning with CY 2009, CMS and the RUC have identified a number of potentially misvalued codes using various identification screens, such as codes with high growth rates, codes that are frequently billed together, and high expenditure codes. Section 3134 of the Affordable Care Act codified the potentially misvalued code initiative under section 1848(c)(2)(K) of the Act.

In the CY 2012 rulemaking process, we proposed and finalized consolidation of the five-year review and the potentially misvalued code activities into an annual review of potentially misvalued codes in order to avoid redundancies in these efforts and better accomplish our goal of assuring regular assessment of code values. Under the consolidated process, we issue interim final RVUs for all revaluations and new codes in the PFS final rule with comment period, and make payment based upon those values during the calendar year covered by the final rule. (Changes in the PFS methodology that may affect valuations of a variety of codes are issued as proposals in the proposed rule). We consider and respond to any public comments on the interim final values in the final rule with comment period for the subsequent year. When consolidating these processes, we indicated that it was appropriate to establish interim values for new, revised and potentially misvalued codes because of the incongruity between the PFS rulemaking cycle and the release of codes by the AMA CPT Editorial Panel and the RUC review process. We stated that if we did not establish interim final values for revalued codes in the final rule with comment period, ''a delay in implementing revised values for codes that have been identified as misvalued would perpetuate payment for the services at a rate that does not appropriately reflect the relative

resources involved in furnishing the service and would continue unwarranted distortion in the payment for other services across the PFS.'' We also reiterated that if we did not establish interim final values for new and revised codes, we would either have to delay the use of new and revised codes for one year, or permit each Medicare contractor to establish its own payment rate for these codes. We stated, ''We believe it would be contrary to the public interest to delay adopting values for new and revised codes for the initial year, especially since we have an opportunity to receive significant input from the medical community [through the RUC] before adopting the values, and the alternatives could produce undesirable levels of uncertainty and inconsistency in payment for a year.''

1. Current Process for Valuing New, Revised, and Potentially Misvalued Codes

Under the process finalized in the CY 2012 PFS final rule with comment period, in each year's proposed rule, we propose specific codes and/or groups of codes that we believe may be appropriate to consider under our potentially misvalued code initiative. As part of our process for developing the list of proposed potentially misvalued codes, we consider public nominations for potentially misvalued codes under a process also established in the CY 2012 PFS final rule with comment period. If appropriate, we include such codes in our proposed potentially misvalued code list. In the proposed rule, we solicit comments on the proposed potentially misvalued codes. We then respond to comments and establish a final list of potentially misvalued codes in the final rule for that year. These potentially misvalued codes are reviewed and revalued, if appropriate, in subsequent years. In addition, the RUC regularly identifies potentially misvalued codes using screens that have previously been identified by CMS, such as codes performed together more than 75 percent of the time.

Generally, the first step in revaluing codes that have been identified as potentially misvalued is for the RUC to review these codes through its standard process, which includes active involvement of national specialty societies for the specialties that ordinarily use the codes. Frequently, the RUC's discussion of potentially misvalued codes will lead the CPT Editorial Panel to make adjustments to the codes involved, such as bundling of codes, creation of new codes or revisions of code descriptors. The AMA has estimated that 75 percent of all annual CPT coding changes result from the potentially misvalued code initiative.

The RUC provides CMS with recommendations for the work values and direct PE inputs for the codes we have identified as potentially misvalued codes or, in the case of a coding revision, for the new or revised codes that will replace these potentially misvalued codes. (This process is also applied to codes that the RUC identifies using code screens that we have identified, and to new or revised codes that are issued for reasons unrelated to the potentially misvalued code process). Generally, we receive the RUC recommendations concurrently for all codes in the same family as the potentially misvalued code(s). We believe it is important to evaluate and establish appropriate work and MP RVUs and direct PE inputs for an entire code family at the same time to avoid rank order anomalies and to maintain appropriate relativity among codes. We generally receive the RUC recommendations for the code or replacement code(s) within a year or two following the identification of the code as potentially misvalued.

We consider the RUC recommendations along with other information that we have, including information submitted by other stakeholders, and establish interim final RVUs for the potentially misvalued codes, new codes, and any other codes for which there are coding changes in the final rule with comment period for a year. There is a 60-day period for the public to comment on those interim final values after we issue the final rule. For services furnished during the calendar year following the publication of interim final rates, we pay for services based upon the interim final values established in the final rule. In the final rule with comment period for the subsequent year, we consider and respond to public comments received on the interim final values, and make any appropriate adjustments to values based on those comments. We then typically finalize the values for the codes.

As we discussed in the CY 2012 PFS final rule with comment period, we adopted this consolidated review process to combine all coding revaluations into one annual process allowing for appropriate consideration of relativity in and across code families. In addition, this process assures that we have the benefit of the RUC recommendations for all codes being valued.

2. Concerns With Current Process.

Some stakeholders who have experienced reductions in payments as the result of interim final valuations have objected to the process by which we revise or establish values for new, revised, and potentially misvalued codes. Some have stated that they did not receive notice of the possible reductions before they occurred. Generally, stakeholders are aware that we are considering changes in the payment rates for particular services either because CPT has made changes to codes or because we have identified the codes as potentially misvalued. As the RUC considers the appropriate value for a service, representatives of the specialties that use the codes are involved in the process. The RUC usually surveys physicians or other practitioners who furnish the services described by the codes regarding the time it takes to furnish the services, and representatives of the specialty(ies) also participate in the RUC meetings where recommendations for work RVUs and direct PE inputs are considered. Through this process, representatives of the affected specialties are generally aware of the RUC recommendations.

Some stakeholders have asserted that even when they are aware that the RUC has made recommendations, they have no opportunity to respond to the RUC recommendations before we consider them in adopting interim final values because the RUC actions and recommendations are not public. Some stakeholders have also said that the individuals who participate in the RUC review process are not able to share the recommendations because they have signed a confidentiality agreement. We note, however, that at least one specialty society has raised funds via its Web site to fight a ''pending cut'' based upon its knowledge of RUC recommendations for specific codes prior to CMS action on the recommendation. Additionally, some stakeholders have pointed out that some types of suppliers that are paid under the PFS are not permitted to participate in the RUC process at all.

We recognize that some stakeholders, including those practitioners represented by societies that are not participants in the RUC process, may not be aware of the specifics of the RUC recommendations before we consider them in establishing interim final values for new, revised, and potentially misvalued codes. We note that, as described above, before we review a service as a potentially misvalued code, we go through notice and comment rulemaking to identify it as a potentially misvalued code. Thus, the public has

notice and an opportunity to comment on whether we should review the values for a code before we finalize the code as potentially misvalued and begin the valuation process. As a result, all stakeholders should be aware that a particular code is being considered as potentially misvalued and that we may establish revised interim final values in a subsequent final rule with comment period. As noted above, there may be some codes for which we receive RUC recommendations based upon their identification by the RUC through code screens that we establish. These codes are not specifically identified by CMS through notice and comment rulemaking as potentially misvalued codes. We recognize that if stakeholders are not monitoring RUC activities or evaluating Medicare claims data, they may be unaware that these codes are being reviewed and could be revalued on an interim final basis in a final rule with comment period for a year.

In recent years, we have increased our scrutiny of the RUC recommendations and have increasingly found cause to modify the values recommended by the RUC in establishing interim final values under the PFS. Sometimes we also find it appropriate, on an interim final basis, to refine how the CPT codes are to be used for Medicare services or to create G-codes for reporting certain services to Medicare. Some stakeholders have objected to such interim final decisions because they do not learn of the CMS action until the final rule with comment period is issued. They believe they do not have an opportunity to meaningfully comment and for CMS to address their comments before the coding or valuation decision takes effect.

We received comments on the CY 2014 PFS final rule with comment period suggesting that the existing process for review and adoption of interim final values for new, revised, and misvalued codes violates section 1871(a)(2) of the Act, which prescribes the rulemaking requirements for the agency in establishing payment rates. In response to those commenters, we note that the process we use to establish interim final rates is in full accordance with the statute and we do not find this a persuasive reason to consider modifying the process that we use to establish PFS rates.

Our recent revaluation of the four epidural injection codes provides an example of the concerns that have been expressed with the existing process. In the CY 2014 PFS final rule with comment period, we established interim final values for four epidural injection codes, which resulted in payment reductions for the services when furnished in the office setting of between 35 percent and 56 percent. (In the facility setting, the reductions range from 17 percent to 33 percent). One of these codes had been identified as a potentially misvalued code 2 years earlier. The affected specialties had been involved in the RUC process and were generally aware that the family of codes would be revalued on an as interim basis in an upcoming rule. They were also aware that the RUC had made significant changes to the direct PE inputs, including removal of the radiographic-fluoroscopy room, which explains, in large part, the reduction to values in the office setting. The societies representing the affected specialty were also aware of significant reductions in the RUC-recommended ''time'' to furnish the procedures based on the most recent survey of practitioners who furnish the services, which resulted in reductions in both the work and PE portion of the values. Although the specialties were aware of the changes that the RUC was recommending to direct PE inputs, they were not specifically aware of how those changes would affect the values and payment rate. In addition, we decreased the work RVUs for these procedures because we found the RUC-recommended work RVUs did not adequately reflect the RUC-recommended decreases in time. This decision is consistent with our general practice when the best available information shows that the time involved in furnishing the service has gone down, and in the absence of information suggesting an increase in work intensity. Since the interim final values for these codes were issued in the CY 2014 PFS final rule with comment period, we have received numerous comments that will be useful to us as we consider finalizing values for these codes. If we had followed a process that involved proposing values for these codes in a proposed rule, we would have been able to consider the additional information contained in these comments prior to making payments for the services based upon revised values. (See section II.B.3.b.2 of this proposed rule for a discussion of proposed valuation of these epidural injection codes for CY 2015).

3. Alternatives to the Current Process

Although we continue to believe the existing process for new, revised and potentially misvalued codes is an appropriate one given the incongruity between our rulemaking schedule and the CPT and RUC schedules, given our heightened review of the RUC recommendations and the increased concerns expressed by some stakeholders, we believe that an assessment of our process for valuing these codes is warranted. To that end, we have considered potential alternatives to address the timing and rulemaking issues associated with establishing values for new, revised and potentially misvalued codes (as well as for codes within the same families as these codes). Specifically, we have explored three alternatives to our current approach:

- Propose work and MP RVUs and direct PE inputs for all new, revised and potentially misvalued codes in a proposed rule.
- Propose changes in work and MP RVUs and direct PE inputs in the proposed rule for new, revised, and potentially misvalued codes for which we receive RUC recommendations in time; continue to establish interim final values in the final rule for other new, revised, and potentially misvalued codes.
- Increase our efforts to make available more information about the specific issues being considered in the course of developing values for new, revised and potentially misvalued codes to increase transparency, but without making changes to the existing process for establishing values.

A discussion of each of these alternatives follows.

(a) Propose work and MP RVUs and direct PE inputs for new, revised and potentially misvalued codes in the proposed rule:

Under this approach, we would evaluate the RUC recommendations for all new, revised, and potentially misvalued codes, and include proposed work and MP RVUs and direct PE inputs for the codes in the first available PFS proposed rule. We would receive and consider public comments on those proposals and establish final values in the final rule. The primary obstacle to this approach relates to the current timing of the CPT coding changes and RUC activities. Under the current calendar, all CPT coding changes and most RUC recommendations are not available to us in time to include proposed values for all codes in the proposed rule for that year.

Therefore, if we were to adopt this proposal, which would require us to propose changes in inputs before we revalue codes based upon those values, we would need a mechanism to pay for services for which the existing codes would no longer be available or for which there would be changes for a given year.

As we noted in the CY 2012 PFS final rule with comment period, the RUC recommendations are an essential

element that we consider when valuing codes. Likewise, we recognize the significant contribution that the CPT Editorial Panel makes to the success of the potentially misvalued code initiative through its consideration and adoption of coding changes. Although we have increased our scrutiny of the RUC recommendations in recent years and accepted fewer of the recommendations without making our own refinements, the CPT codes and the RUC recommendations continue to play a major role in our valuations. For many codes, the surveys conducted by specialty societies as part of the RUC process are the best data that we have regarding the time and intensity of work. The RUC determines the criteria and the methodology for those surveys. It also reviews the survey results. This process allows for development of survey data that are more reliable and comparable across specialties and services than would be possible without having the RUC at the center of the survey vetting process. In addition, the debate and discussion of the services at the RUC meetings in which CMS staff participate provides a good understanding of what the service entails and how it compares to other services in the family, and to services furnished by other specialties. The debate among the specialties is also an important part of this process. Although we increasingly consider data and information from many other sources, and we intend to expand the scope of those data and sources, the RUC recommendations remain a vital part of our valuation process.

Thus, if we were to adopt this approach, we would need to address how to make payment for the services for which new or revised codes take effect for the following year but for which we did not receive RUC recommendations in time to include proposed work values and PE inputs in the proposed rule. Because the annual coding changes are effective on January 1st of a year, we would need a mechanism for practitioners to report services and be paid appropriately during the interval between the date the code takes effect and the time that we receive RUC recommendations and complete rulemaking to establish values for the new and revised codes. One option would be to establish G-codes with identical descriptors to the predecessors of the new and revised codes and, to the fullest extent possible, carry over the existing values for those codes. This would effectively preserve the status quo for one year.

The primary advantage of this approach would be that the RVUs for all services under the PFS would be established using a full notice and comment procedure, including consideration of the RUC recommendations, before they take effect. In addition to having the benefit of the RUC recommendations, this would provide the public the opportunity to comment on a specific proposal prior to it being implemented. This would be a far more transparent process, and would assure that we have the full benefit of stakeholder comments before establishing values.

One drawback to such a process is that the use of G-codes for a significant number of codes may create an administrative burden for CMS and for practitioners. Presumably, practitioners would need to use the G-codes to report certain services for purposes of Medicare, but would use the new or revised CPT codes to report the same services to private insurers. The number of G-codes needed each year would depend on the number of CPT code changes for which we do not receive the RUC recommendations in time to formulate a proposal to be included in the proposed rule for the year. To the extent that we receive the RUC recommendations for all new and revised codes in time to develop proposed values for inclusion in the proposed rule, there would be no need to use G-codes for this purpose.

Another drawback is that we would need to delay for at least one year the revision of values for any misvalued codes for which we do not receive RUC recommendations in time to include a proposal in the proposed rule. For a select set of codes, we would be continuing to use the RVUs for the codes for an additional year even though we know they do not reflect the most accurate resources. Since the PFS is a budget neutral system, misvalued services affect payments for all services across the fee schedule. On the other hand, if we were to take this approach, we would have the full benefit of public comments received on the proposed values for potentially misvalued services before implementing any revisions.

(b) Propose changes in work and MP RVUs and PE inputs in the proposed rule for new, revised, and potentially misvalued codes for which we receive RUC recommendations in time; continue to establish interim final values in the final rule for other new, revised, and potentially misvalued codes:

This alternative approach would allow for notice and comment rulemaking before we adopt values for some new, revised and potentially misvalued codes (those for which we receive RUC recommendations in time to include a proposal in the proposed rule), while others would be valued on an interim final basis (those for which we do not receive the RUC recommendations in time). Under this approach, we would establish values in a year for all new, revised, and potentially misvalued codes, and there would be no need to provide for a mechanism to continue payment for outdated codes pending receipt of the RUC recommendations and completion of a rulemaking cycle. For codes for which we do not receive the RUC recommendations in time to include a proposal in the proposed rule for a year, there would be no change from the existing valuation process.

This would be a balanced approach that recognizes the benefits of a full opportunity for notice and comment rulemaking before establishing rates when timing allows, and the importance of establishing appropriate values for the current version of CPT codes and for potentially misvalued codes when the timing of the RUC recommendations does not allow for a full notice and comment procedure.

However, this alternative would go only part of the way toward addressing concerns expressed by some stakeholders. For those codes for which the RUC recommendations are not received in time for us to include a proposal in the proposed rule, Medicare payment for one year would still be based on inputs established without the benefit of full public notice and comment. Another concern with this approach is that it could lead to the valuation of codes within the same family at different times depending on when we receive RUC recommendations for each code within a family. As discussed previously, we believe it is important to value an entire code family together in order to make adjustments to account appropriately for relativity within the family and between the family and other families. If we receive RUC recommendations in time to propose values for some, but not for all, codes within a family, we would respond to comments in the final rule to establish final values for some of the codes while adopting interim final values for other codes within the same family. The differences in the treatment of codes within the same family could limit our ability to value codes within the same family with appropriate relativity. Moreover, under this alternative, the main determinant of how a code would be handled would be the timing of our receipt of the RUC recommendation for the code. Although

this approach would offer stakeholders the opportunity to comment on specific proposals in the proposed rule, the adoption of changes for a separate group of codes in the final rule could significantly change the proposed values simply due to the budget neutrality adjustments due to additional codes being valued in the final rule.

(c) Increase our efforts to make available more information about the specific issues being considered in the course of developing values for new, revised and potentially misvalued codes in order to increase transparency, but without a change to the existing process for establishing values:

The main concern with continuing our current approach is that stakeholders have expressed the desire to have adequate and timely information to permit the provision of relevant feedback to CMS for our consideration prior to establishing a payment rate for new, revised, and potentially misvalued codes. We could address some aspects of this issue by increasing the transparency of the current process. Specifically, we could make more information available on the CMS Web site before interim final values are established for codes. Examples of such information include an up-to-date list of all codes that have been identified as potentially misvalued, a list of all codes for which RUC recommendations have been received, and the RUC recommendations for all codes for which we have received them.

Although the posting of this information would significantly increase transparency for all stakeholders, it still would not allow for full notice and comment rulemaking procedures before values are established for payment purposes. Nor would it provide the public with advance information about whether or how we will make refinements to the RUC recommendations or coding decisions in the final rule with comment period. Thus, stakeholders would not have an opportunity to provide input on our potential modifications before interim final values are adopted.

4. Proposal To Modify the Process for Establishing Values for New, Revised, and Potentially Misvalued Codes

After considering the current process, including its strengths and weaknesses, and the alternatives to the current process described previously, we are proposing to modify our process to make all changes in the work and MP RVUs and the direct PE inputs for new, revised and potentially misvalued services under the PFS by proposing the changes in the proposed rule, beginning with the PFS proposed rule for CY 2016. We propose to include proposed values for all new, revised and potentially misvalued codes for which we have complete RUC recommendations by January 15th of the preceding year. For the CY 2016 rulemaking process, we would include in the proposed rule proposed values for all services for which we have RUC recommendations by January 15, 2015.

For those codes for which we do not receive the RUC recommendations by January 15th of a year, we would delay revaluing the code for one year (or until we receive RUC recommendations for the code before January 15th of a year) and include proposed values in the following year's rule. Thus, we would include proposed values prior to using the new code (in the case of new or revised codes) or revising the value (in the case of potentially misvalued codes). Due to the complexities involved in code changes and rate setting, there could be some circumstances where, even when we receive the RUC recommendations by January 15th of a year, we are not able to propose values in that year's proposed rule. For example, we might not have recommendations for the whole family or we might need additional information to appropriately value these codes. In situations where it would not be appropriate or possible to propose values for certain new, revised, or potentially misvalued codes, we would treat them in the same way as those for which we did not receive recommendations before January 15th.

For new, revised, and potentially misvalued codes for which we do not receive RUC recommendations before January 15th of a year, we propose to adopt coding policies and payment rates that conform, to the extent possible, to the policies and rates in place for the previous year. We would adopt these conforming policies on an interim basis pending our consideration of the RUC recommendations and the completion of notice and comment rulemaking to establish values for the codes. For codes for which there is no change in the CPT code, it is a simple matter to continue the current valuation. For services for which there are CPT coding changes, it is more complicated to maintain the current payment rates until the codes can be valued through the notice and comment rulemaking process. Since the changes in CPT codes are effective on January 1st of a year, and we would not have established values for the new or revised codes (or other codes within the code family), it would not be practicable for Medicare to use those CPT codes. For codes that were revised or deleted as part of the annual CPT coding changes, when the changes could affect the value of a code and we have not had an opportunity to consider the relevant RUC recommendations prior to the proposed rule, we propose to create G-codes to describe the predecessor codes to these codes. If CPT codes are revised in a manner that would not affect the resource inputs used to value the service, (for example, a grammatical changes to CPT code descriptors,) we could use these revised codes and continue to pay at the rate developed through the use of the same resource inputs. For example, if a single CPT code was separated into two codes and we did not receive RUC recommendations for the two codes before January 15th of the year, we would assign each of those new codes an ''I'' status indicator (which denotes that the codes are ''not valid for Medicare purposes''), and those codes could not be used for Medicare payment during the year. Instead we would create a G-code with the same description as the single predecessor CPT code and continue to use the same inputs as the predecessor CPT code for that G-code during the year.

For new codes that describe wholly new services, as opposed to new or revised codes that describe services which are already on the PFS, we would make every effort to work with the RUC to ensure that we receive recommendations in time to include proposed values in the proposed rule. However, if we do not receive timely recommendations from the RUC for such a code and we determine that it is in the public interest for Medicare to use a new code during the code's initial year, we would need to establish values for the code's initial year. As we do under our current policy, if we receive the RUC recommendations in time to consider them for the final rule, we propose to establish values for the initial year on an interim final basis subject to comment in the final rule. In the event we do not receive RUC recommendations in time to consider them for the final rule, or in other situations where it would not be appropriate to establish interim final values (for example, because of a lack of necessary information about the work or the price of the PE inputs involved), we would contractor price the code for the initial year.

We propose to modify the regulation at § 414.24 to codify the process described above.

We recognize that the use of G-codes, especially if there are many of them in a given year, may place an administrative burden on those who bill

for services under the PFS. We also recognize that, to the extent we do not receive RUC recommendations in time to include proposed values in the proposed rule, the most updated version of some CPT codes would not be used by the Medicare program for the first year. The AMA has been working to develop timeframes that would allow a much greater percentage of codes to be addressed in the proposed rule and has shared with us some plans to achieve this goal. We appreciate AMA's efforts and are hopeful that if this proposal is adopted the CPT Editorial Panel and the RUC ultimately will be able to adjust their timelines and processes so that most, if not all, of the annual coding changes and valuation recommendations can be addressed in the proposed rule prior to the effective date of the coding changes.

As discussed previously, the work of the AMA through the CPT Editorial Panel and the RUC are critical elements in the appropriate valuation of services under the PFS. We have proposed implementation of the revised CMS process for establishing values for new, revised, and potentially misvalued codes for CY 2016; but would consider alternative implementation dates to allow time for the CPT Editorial Panel and the RUC to adjust their schedules to avoid the necessity to use G-codes.

With regard to this proposal, we would be specifically interested in comments on the following topics:

- Is this proposal preferable to the present process? Is another one of the alternatives better?
- If we were to implement this proposal, is it better to move forward with the changes, or is more time needed to make the transition such that implementation should be delayed beyond CY 2016? What factors should we consider in selecting an implementation date?
- Are there alternatives other than the use of G-codes that would allow us to address the annual CPT changes through notice and comment rather than interim final rulemaking?

5. Refinement Panel

As discussed in the 1993 PFS final rule with comment period (57 FR 55938), we adopted a refinement panel process to assist us in reviewing the public comments on CPT codes with interim final work RVUs for a year and in developing final work values for the subsequent year. We decided the panel would be comprised of a multispecialty group of physicians who would review and discuss the work involved in each procedure under review, and then each panel member would individually rate the work of the procedure. We believed establishing the panel with a multispecialty group would balance the interests of the specialty societies who commented on the work RVUs with the budgetary and redistributive effects that could occur if we accepted extensive increases in work RVUs across a broad range of services.

Following enactment of section 1848(c)(2)(K) of the Act, which required the Secretary periodically to review potentially misvalued codes and make appropriate adjustments to the RVUs, we reassessed the refinement panel process. As detailed in the CY 2011 PFS final rule with comment period (75 FR 73306), we continued using the established refinement panel process with some modifications.

As we consider changes to the processes for valuing codes, we are reassessing the role that the refinement panel process plays in the code valuation process. As we note in the discussion above, the current refinement panel process is tied to interim final values. It provides an opportunity for stakeholders to provide new clinical information that was not available at the time of the RUC valuation that might affect work RVU values that are adopted in the interim final value process. If our proposal to modify the valuation process for new, revised and potentially misvalued codes is adopted, there would no longer be interim final values except for a very few codes that describe totally new services. Thus, we are proposing to eliminate the refinement panel process. By using the proposed process for new, revised, and potentially misvalued codes, we believe that the consideration of additional clinical information and any other issues associated with the CMS proposed values could be addressed through the notice and public comment process. Similarly, prior to CY 2012 when we consolidated the five-year valuation, changes made as part of the five-year review process were addressed in the proposed rule and those codes were generally not subject to the refinement process. The notice and comment process would provide stakeholders with complete information on the basis and rationale for our proposed inputs and any relating coding policies. We also note that an increasing number of requests for refinement do not include new clinical information that was not available at the time of the RUC meeting that would justify a change in the work RVUs, in accordance with the current requirements for refinement. Thus, we do not believe the elimination of the refinement panel process would negatively affect the code valuation process. We believe the proposed process, which includes a full notice and comment procedure before values are used for purposes of payment, offers stakeholders a better mechanism for providing any additional data for our consideration and discussing any concerns with our proposed values than the current refinement process.

G. Chronic Care Management (CCM)

As we discussed in the CY 2013 PFS final rule with comment period, we are committed to supporting primary care and we have increasingly recognized care management as one of the critical components of primary care that contributes to better health for individuals and reduced expenditure growth (77 FR 68978). Accordingly, we have prioritized the development and implementation of a series of initiatives designed to improve payment for, and encourage long-term investment in, care management services. These initiatives include the following programs and demonstrations:

- The Medicare Shared Savings Program (described in ''Medicare Program; Medicare Shared Savings Program: Accountable Care Organizations; Final Rule,'' which appeared in the November 2, 2011 **Federal Register** (76 FR 67802)).
- The testing of the Pioneer ACO model, designed for experienced health care organizations (described on the Center for Medicare and Medicaid Innovation's (Innovation Center's) Web site at *http://innovation.cms.gov/initiatives/Pioneer-ACO-Model/index.html*).
- The testing of the Advance Payment ACO model, designed to support organizations participating in the Medicare Shared Savings Program (described on the Innovation Center's Web site at *http://innovation.cms.gov/initiatives/Advance-Payment-ACO-Model/*).
- The Primary Care Incentive Payment (PCIP) Program (described on the CMS Web site at *www.cms.gov/Medicare/Medicare-Fee-for-Service-Payment/PhysicianFeeSched/Downloads/PCIP–2011-Payments.pdf*).
- The patient-centered medical home model in the Multi-payer Advanced Primary Care Practice (MAPCP) Demonstration designed to test whether the quality and coordination of health care services are improved by making advanced primary care practices more broadly available (described on the CMS Web site at *www.cms.gov/Medicare/Demonstration-Projects/DemoProjectsEvalRpts/downloads/mapcpdemo_Factsheet.pdf*).

• The Federally Qualified Health Center (FQHC) Advanced Primary Care Practice demonstration (described on the CMS Web site at *http://www.cms.gov/Medicare/Demonstration-Projects/DemoProjectsEvalRpts/Downloads/FQHC_APCP_Demo_FAQsOct2011.pdf* and the Innovation Center's Web site at *www.innovations.cms.gov/initiatives/FQHCs/index.html*).

• The Comprehensive Primary Care (CPC) initiative (described on the Innovation Center's Web site at *http://innovations.cms.gov/initiatives/Comprehensive-Primary-Care-Initiative/index.html*). The CPC initiative is a multi-payer initiative fostering collaboration between public and private health care payers to strengthen primary care in certain markets across the country.

In addition, HHS leads a broad initiative focused on optimizing health and quality of life for individuals with multiple chronic conditions. HHS's Strategic Framework on Multiple Chronic Conditions outlines specific objectives and strategies for HHS and private sector partners centered on strengthening the health care and public health systems; empowering the individual to use self-care management with the assistance of a healthcare provider who can assess the patient's health literacy level; equipping care providers with tools, information, and other interventions; and supporting targeted research about individuals with multiple chronic conditions and effective interventions. Further information on this initiative is available on the HHS Web site at *http://www.hhs.gov/ash/initiatives/mcc/index.html.*

In coordination with all of these initiatives, we also have continued to explore potential refinements to the PFS that would appropriately value care management within Medicare's statutory structure for fee-for-service physician payment and quality reporting. For example, in the CY 2013 PFS final rule with comment period, we adopted a policy to pay separately for care management involving the transition of a beneficiary from care furnished by a treating physician during a hospital stay to care furnished by the beneficiary's primary physician in the community (77 FR 68978 through 68993).

In the CY 2014 PFS final rule with comment period, we finalized a policy to pay separately for care management services furnished to Medicare beneficiaries with two or more chronic conditions beginning in CY 2015 (78 FR 74414).

1. Valuation of CCM Services—GXXX1

CCM is a unique PFS service designed to pay separately for non-face-to-face care coordination services furnished to Medicare beneficiaries with two or more chronic conditions. (See 78 FR 74414 for a more complete description of the beneficiaries for whom this service may be billed.) In the CY 2014 PFS final rule with comment period, we indicated that, to recognize the additional resources required to provide CCM services to patients with multiple chronic conditions, we were creating the following code to use for reporting this service (78 FR 74422):

• *GXXX1* Chronic care management services furnished to patients with multiple (two or more) chronic conditions expected to last at least 12 months, or until the death of the patient, that place the patient at significant risk of death, acute exacerbation/decompensation, or functional decline; 20 minutes or more; per 30 days.

Although this service is unique in that it was created to separately pay for care management services, other codes include care management components. To value CCM, we compared it to other codes that involve care management. In doing so, we concluded that the CCM services were similar in work (time and intensity) to that of the non-face-to-face portion of transitional care management (TCM) services (CPT code 99495 (Transitional Care Management Services with the following required elements: Communication (direct contact, telephone, electronic) with the patient and/or caregiver within 2 business days of discharge Medical decision making of at least moderate complexity during the service period Face-to-face visit, within 14 calendar days of discharge)).

Accordingly, we used the work RVU and work time associated with the non-face-to-face portion of CPT code 99495 as a foundation to determine our proposed values for CCM services. Specifically, we are proposing a work RVU for GXXX1 of 0.61, which is the portion of the work RVU for CPT code 99495 that remains after subtracting the work attributable to the face-to-face visit. (CPT code 99214 (office/outpatient visit est) was used to value CPT code 99495), which has a work RVU of 1.50.) Similarly, we are proposing a work time of 15 minutes for HCPCS code GXXX1 for CY 2015 based on the time attributable to the non-face-to-face portion of CPT 99495. The work time file associated with this PFS proposed rule is available on the CMS Web site in the Downloads section for the CY 2015 PFS proposed rule at *http://www.cms.gov/Medicare/Medicare-Fee-for-Service-Payment/PhysicianFeeSched/PFS-Federal-Regulation-Notices.html.*

For direct PE inputs, we are proposing 20 minutes of clinical labor time. As established in the CY 2014 PFS final rule with comment period, in order to bill for this code, at least 20 minutes of CCM services must be furnished during the 30-day billing interval (78 FR 74422). Based upon input from stakeholders and the nature of care management services, we believe that many aspects of this service will be provided by clinical staff, and thus, clinical staff will be involved in the typical service for the full 20 minutes. The proposed CY 2015 direct PE input database reflects this input and is available on the CMS Web site under the supporting data files for the CY 2015 PFS proposed rule at *http://www.cms.gov/Medicare/Medicare-Fee-for-Service-Payment/PhysicianFeeSched/PFS-Federal-Regulation-Notices.html.* The proposed PE RVUs included in Addendum B to this proposed rule reflect the RVUs that result from using these inputs to establish PE RVUs.

The proposed MP RVU was calculated using the weighted risk factors for the specialties that we believe will furnish this service. We believe this malpractice risk factor appropriately reflects the relative malpractice risk associated with furnishing CCM services. The MP RVU included in Addendum B of this proposed rule reflects the RVU that results from the application of this proposal.

2. CCM and TCM Services Furnished Incident to a Physician's Service Under General Physician Supervision

In the CY 2014 PFS final rule with comment period (75 FR 74425 through 74427), we discussed how the policies relating to services furnished incident to a practitioner's professional services apply to CCM services. (In this discussion, the term practitioner means both physicians and NPPs who are permitted to bill for services furnished incident to their own professional services.) Specifically, we addressed the policy for counting clinical staff time for services furnished incident to the billing practitioner's services toward the minimum amount of service time required to bill for CCM services.

We established an exception to the usual rules that apply to services furnished incident to the services of a billing practitioner. Generally, under the ''incident to'' rules, practitioners may bill for services furnished incident to their own services if the services meet the requirements specified in our

regulations at § 410.26. One of these requirements is that the ''incident to'' services must be furnished under direct supervision, which means that the supervising practitioner must be present in the office suite and be immediately available to provide assistance and direction throughout the service (but does not mean that the supervising practitioner must be present in the room where the service is furnished). We noted in last year's PFS final rule with comment period that because one of the required elements of the CCM service is the availability to a beneficiary 24-hours-a-day, 7-days-a-week to address the patient's chronic care needs (78 FR 74426) that we expect the beneficiary to be provided with a means to make timely contact with health care providers in the practice whenever necessary to address chronic care needs regardless of the time of day or day of the week. In those cases when the need for contact arises outside normal business hours, it is likely that the patient's initial contact would be with clinical staff employed by the practice (for example, a nurse) and not necessarily with a practitioner. Under these circumstances, it would be unlikely that a practitioner would be available to provide direct supervision of the service.

Therefore, in the CY 2014 PFS final rule with comment period, we created an exception to the generally applicable requirement that ''incident to'' services must be furnished under direct supervision. Specifically, we finalized a policy to require only general, rather than direct, supervision when CCM services are furnished incident to a practitioner's services outside of the practice's normal business hours by clinical staff who are direct employees of the practitioner or practice. We explained that, given the potential risk to patients that the exception to direct supervision could create, we believed that it was appropriate to design the exception as narrowly as possible (78 FR 74426). The direct employment requirement was intended to balance the less stringent general supervision requirement by ensuring that there is a direct oversight relationship between the supervising practitioner and the clinical staff personnel who provide after hours services.

In this rule, we are proposing to revise the policy that we adopted in the CY 2014 PFS final rule with comment period, and to amend our regulations to codify the requirements for CCM services furnished incident to a practitioner's services. Specifically, we are proposing to remove the requirement that, in order to count the time spent by clinical staff providing aspects of CCM services toward the CCM time requirement, the clinical staff person must be a direct employee of the practitioner or the practitioner's practice. (We note that the existing requirement that these services be provided by clinical staff, specifically, rather than by other auxiliary personnel is an element of the service for both CCM and TCM services, rather than a requirement imposed by the ''incident to'' rules themselves.) We are also proposing to remove the restriction that services provided by clinical staff under general (rather than direct) supervision may be counted only if they are provided outside of the practice's normal business hours. Under our proposed revised policy, then, the time spent by clinical staff providing aspects of CCM services can be counted toward the CCM time requirement at any time, provided that the clinical staff are under the general supervision of a practitioner and all requirements of the ''incident to'' regulations at § 410.26 are met.

We are proposing to revise these aspects of the policy for several reasons. First, one of the required elements of the CCM service is the availability of a means for the beneficiary to make contact with health care practitioners in the practice to address a patient's urgent chronic care needs (78 FR 74418 through 74419). Other elements within the scope of CCM services are similarly required to be furnished by practitioners or clinical staff. We believe that these elements of the CCM scope of service require the presence of an organizational infrastructure sufficient to adequately support CCM services, irrespective of the nature of the employment or contractual relationship between the clinical staff and the practitioner or practice. We also believe that the elements of the CCM scope of service, such as the requirement of a care plan, ensure a close relationship between a practitioner furnishing ongoing care for a beneficiary and clinical staff providing aspects of CCM services under general supervision; and that this close working relationship is sufficient to render a requirement of a direct employment relationship or direct supervision unnecessary. Under our proposal, CCM services could be furnished ''incident to'' under general supervision if the auxiliary personnel providing the services in conjunction with CCM services are clinical staff, and whether or not they are direct employees of the practitioner or practice billing for the service; but the clinical staff must meet the requirements for auxiliary personnel contained in § 410.26(a)(1). Other than the exception to permit general supervision for clinical staff, the same requirements apply to CCM services furnished incident to a practitioner's professional services as apply to other ''incident to'' services. Furthermore, since last year's final rule, we have had many consultations with physicians and others about the organizational structures and other factors that contribute to effective provision of CCM services. These consultations have convinced us that, for purposes of clinical staff providing aspects of CCM services, it does not matter whether the practitioner is directly available to supervise because the nature of the services are such that they can be, and frequently are, provided outside of normal business hours or while the physician is away from the office during normal business hours. This is because, unlike most other services to which the ''incident to'' rules apply, the CCM services are intrinsically non-face-to-face care coordination services.

In conjunction with this proposed revision to the requirements for CCM services provided by clinical staff incident to the services of a practitioner, we are also proposing to adopt the same requirements for equivalent purposes in relation to TCM services. As in the case of CCM, TCM explicitly includes separate payment for services that are not necessarily furnished face-to-face, such as coordination with other providers and follow-up with patients. It would also not be uncommon for auxiliary personnel to provide elements of the TCM services when the physician was not in the office. Generally, we believe that it is appropriate to treat separately billable care coordination services similarly whether in the form of CCM or TCM. We also believe that it would be appropriate to apply the same ''incident to'' rules that we are proposing for CCM services to TCM services. We are not proposing to extend this policy to the E/M service that is a required element of TCM. Rather, the required E/M service must still be furnished under direct supervision.

Therefore, we are proposing to revise our regulation at § 410.26, which sets out the applicable requirements for ''incident to'' services, to permit TCM and CCM services provided by clinical staff incident to the services of a practitioner to be furnished under the general supervision of a physician or other practitioner. As with other ''incident to'' services, the physician (or other practitioner) supervising the auxiliary personnel need not be the same physician (or other practitioner) upon whose professional service the

''incident to'' service is based. We note that all other ''incident to'' requirements continue to apply and that documentation of services provided must be included in the medical record.

3. Scope of Services and Standards for CCM Services

In the CY 2014 final rule with comment period (78 FR 74414 through 74428), we defined the elements of the scope of service for CCM services required in order for a practitioner to bill Medicare for CCM services. In addition, we indicated that we intended to develop standards for practices that furnish CCM services to ensure that the practitioners who bill for these services have the capability to fully furnish them (78 FR 74415, 74418). At that time, we anticipated that we would propose these standards in this proposed rule. We actively sought input toward development of these standards by soliciting public comments on the CY 2014 PFS final rule with comment period, through outreach to stakeholders in meetings, by convening a Technical Expert Panel, and by collaborating with federal partners such as the Office of the Assistant Secretary for Planning and Evaluation, the Office of the Assistant Secretary for Health, the Office of the National Coordinator for Health Information Technology, and the Health Resources and Services Administration. Our goal is to recognize the trend toward practice transformation and overall improved quality of care, while preventing unwanted and unnecessary care.

As we worked to develop appropriate practice standards that would meet this goal, we consistently found that many of the standards we thought were important overlapped in significant ways with the scope of service or with the billing requirements for the CCM services that had been finalized in the CY 2014 final rule with comment period. In cases where the standards we identified were not unique to CCM requirements, we found that the standards overlapped with other Medicare requirements or other federal requirements that apply generally to health care practitioners. Based upon the feedback we had received, we sought to avoid duplicating other requirements or, worse, imposing conflicting requirements on practitioners that would furnish CCM services. Given the standards and requirements already in place for health care practitioners and that will apply to those who furnish and bill for CCM services, we have decided not to propose an additional set of standards that must be met in order for practitioners to furnish and bill for CCM services. Instead of proposing a new set of standards applicable to only CCM services, we have decided to emphasize that certain requirements are inherent in the elements of the existing scope of service for CCM services, and clarify that these must be met in order to bill for CCM services.

In one area—that of electronic health records—we are concerned that the existing elements of the CCM service could leave some gaps in assuring that beneficiaries consistently receive care management services that offer the benefits of advanced primary care as it was envisioned when this service was created. It is clear that effective care management can be accomplished only through regular monitoring of the patient's health status, needs, and services, and through frequent communication and exchange of information with the beneficiary and among health care practitioners treating the beneficiary. As a part of the CY 2014 PFS final rule with comment period (78 FR 43338 through 43339), we specified that the electronic health record for a patient receiving CCM services should include a full list of problems, medications and medication allergies in order to inform the care plan, care coordination, and ongoing clinical care. Furthermore, those furnishing CCM services must be able to facilitate communication of relevant patient information through electronic exchange of a summary care record with other health care providers as a part of managing health care transitions. We believe that if care is to be coordinated effectively, all communication must be timely, and it must include the information that each team member needs to know to furnish care that is congruent with a patient's needs and preferences. In addition, those furnishing CCM services need to establish reliable flows of information from emergency departments, hospitals, and providers of post-acute care services to track their CCM patients receiving care in those settings. Reliable information flow supports care transitions, and can be used to assess the need for modifications of the care plan that will reduce the risk of readmissions, increased morbidity, or mortality.

After gathering input from stakeholders, we believe that requiring those who furnish CCM services to utilize electronic health record technology that has been certified by a certifying body authorized by the National Coordinator for Health Information Technology will ensure that practitioners have adequate capabilities to allow members of the interdisciplinary care team to have immediate access to the most updated information informing the care plan. Furthermore, we believe that requiring those that furnish CCM services to maintain and share an electronic care plan will alleviate the development of duplicative care plans or updates and the associated errors that can occur when care plans are not systematically reconciled. To ensure that practices offering CCM services meet these needs, we are proposing a new scope of service requirement for electronic care planning capabilities and electronic health records. Specifically, we are proposing that CCM services must be furnished with the use of an electronic health record or other health IT or health information exchange platform that includes an electronic care plan that is accessible to all providers within the practice, including being accessible to those who are furnishing care outside of normal business hours, and that is available to be shared electronically with care team members outside of the practice. To ensure all practices have adequate capabilities to meet electronic health record requirements, the practitioner must utilize EHR technology certified by a certifying body authorized by the National Coordinator for Health Information Technology to an edition of the electronic health record certification criteria identified in the then-applicable version of 45 CFR part 170. At a minimum, the practice must utilize EHR technology that meets the certification criteria adopted at 45 CFR 170.314(a)(3), 170.314(a)(4), 170.314(a)(5), 170.314(a)(6), 170.314(a)(7) and 170.314(e)(2) pertaining to the capture of demographics, problem lists, medications, and other key elements related to the ultimate creation of an electronic summary care record. For example, practitioners furnishing CCM services beginning in CY 2015 would be required to utilize an electronic health record certified to at least those 2014 Edition certification criteria. Given these certification criteria, EHR technology would be certified to capture data and ultimately produce summary records according to the HL7 Consolidated Clinical Document Architecture standard (see 45 CFR 170.205(a)(3)). When any of the CCM scope of service requirements include a reference to a health or medical record, a system meeting these requirements is required.

We believe this scope of service element will ensure that practitioners have adequate capabilities to fully

furnish CCM services, allow practitioners to innovate around the systems that they use to furnish these services, and avoid overburdening small practices. We believe that allowing flexibility as to how providers capture, update, and share care plan information is important at this stage given the maturity of current electronic health record standards and other electronic tools in use in the market today for care planning.

In addition to seeking comment on this new proposed scope of service element, we are seeking comment on any changes to the scope of service or billing requirements for CCM services that may be necessary to ensure that the practitioners who bill for these services have the capability to furnish them and that we can appropriately monitor billing for these services.

To assist stakeholders in commenting, we remind you of the elements of the current scope of service for CCM services that are required in order for a practitioner to bill Medicare for CCM services as finalized in the CY 2014 final rule with comment period. We would note that additional explanation of these elements can be found at 78 FR 74414 through 74428. The CCM service includes:

- Access to care management services 24-hours-a-day, 7-days-a-week, which means providing beneficiaries with a means to make timely contact with health care providers in the practice to address the patient's urgent chronic care needs regardless of the time of day or day of the week.
- Continuity of care with a designated practitioner or member of the care team with whom the patient is able to get successive routine appointments.
- Care management for chronic conditions including systematic assessment of patient's medical, functional, and psychosocial needs; system-based approaches to ensure timely receipt of all recommended preventive care services; medication reconciliation with review of adherence and potential interactions; and oversight of patient self-management of medications.
- Creation of a patient-centered care plan document to assure that care is provided in a way that is congruent with patient choices and values. A plan of care is based on a physical, mental, cognitive, psychosocial, functional and environmental (re)assessment and an inventory of resources and supports. It is a comprehensive plan of care for all health issues.
- Management of care transitions between and among health care providers and settings, including referrals to other clinicians, follow-up after a beneficiary visit to an emergency department, and follow-up after discharges from hospitals, skilled nursing facilities, or other health care facilities.
- Coordination with home and community based clinical service providers as appropriate to support a beneficiary's 's psychosocial needs and functional deficits.
- Enhanced opportunities for a beneficiary and any relevant caregiver to communicate with the practitioner regarding the beneficiary's care through, not only telephone access, but also through the use of secure messaging, internet or other asynchronous non face-to-face consultation methods.

Similarly, we remind stakeholders that in the CY 2014 final rule, we established particular billing requirements for CCM services that require the practitioner to:

- Inform the beneficiary about the availability of the CCM services from the practitioner and obtain his or her written agreement to have the services provided, including the beneficiary's authorization for the electronic communication of the patient's medical information with other treating providers as part of care coordination.
- Document in the patient's medical record that all of the CCM services were explained and offered to the patient, and note the beneficiary's decision to accept or decline these services.
- Provide the beneficiary a written or electronic copy of the care plan and document in the electronic medical record that the care plan was provided to the beneficiary.
- Inform the beneficiary of the right to stop the CCM services at any time (effective at the end of a 30-day period) and the effect of a revocation of the agreement on CCM services.
- Inform the beneficiary that only one practitioner can furnish and be paid for these services during the 30-day period.

With the addition of the electronic health record element that we are proposing, we believe that these elements of the scope of service for CCM services, when combined with other important federal health and safety regulations, provide sufficient assurance that Medicare beneficiaries receiving CCM services will receive appropriate services. However, we remain interested in receiving public feedback regarding any meaningful elements of the CCM service or beneficiary protections that may be missing from these scope of service elements and billing requirements. We encourage commenters, in recommending additional possible elements or safeguards, to provide as much specific detail as possible regarding their recommendations and how they can be applied to the broad complement of practitioners who may furnish CCM services under the PFS.

4. Payment of CCM Services in CMS Models and Demonstrations

As discussed above, several CMS models and demonstrations address payment for care management services. The Multi-payer Advanced Primary Care Practice Demonstration and the Comprehensive Primary Care Initiative both include payments for care management services that closely overlap with the scope of service for the new chronic care management services code. In these two initiatives, primary care practices are receiving per beneficiary per month payments for care management services furnished to Medicare fee-for-service beneficiaries attributed to their practices. We propose that practitioners participating in one of these two models may not bill Medicare for CCM services furnished to any beneficiary attributed to the practice for purposes of participating in one of these initiatives, as we believe the payment for CCM services would be a duplicative payment for substantially the same services for which payment is made through the per beneficiary per month payment. However, we propose that these practitioners may bill Medicare for CCM services furnished to eligible beneficiaries who are not attributed to the practice for the purpose of the practice's participation as part of one of these initiatives. As the Innovation Center implements new models or demonstrations that include payments for care management services, or as changes take place affecting existing models or demonstrations, we will address potential overlaps with CCM and seek to implement appropriate reimbursement policies. We welcome comments on this proposal. We also solicit comments on the extent to which these services may not actually be duplicative and, if so, how our reimbursement policy could be tailored to address those situations.

H. Definition of Colorectal Cancer Screening Tests

Section 1861(pp) of the Act defines ''colorectal cancer screening tests'' and, under section 1861(pp)(1)(C), a ''screening colonoscopy'' is one of the recognized procedures. Among other things, section 1861(pp)(1)(D) of the Act authorizes the Secretary to modify the tests and procedures covered under this subsection, ''with such frequency and payment limits, as the Secretary

determines appropriate,'' in consultation with appropriate organizations. The current definition of ''colorectal cancer screening tests'' at § 410.37(a)(1) includes ''screening colonoscopies.'' Until recently, the prevailing standard of care for screening colonoscopies has been moderate sedation provided intravenously by the endoscopist, without resort to separately provided anesthesia.[1] Based on this standard of care, payment for moderate sedation has accordingly been bundled into the payment for the colorectal cancer screening tests, (for example, G0104, G0105). For these procedures, because moderate sedation is bundled into the payment, the same physician cannot also report a sedation code. An anesthesia service can be billed by a second physician.

However, a recent study in *The Journal of the American Medical Association* (JAMA) cited an increase in the percentage of colonoscopies and upper endoscopy procedures furnished using an anesthesia professional, from 13.5 percent in 2003 to 30.2 percent in 2009 within the Medicare population, with a similar increase in the commercially-insured population.[2] A 2010 study projected that the percentage of this class of procedures involving an anesthesia professional would grow to 53.4 percent by 2015.[3] These studies suggest that the prevailing standard of care for endoscopies in general and screening colonoscopies in particular is undergoing a transition, and that anesthesia separately provided by an anesthesia professional is becoming the prevalent practice. After reviewing these studies, we analyzed Medicare claims data and found that the same trend was observed in screening colonoscopies for Medicare beneficiaries. We found that in 53 percent of screening colonoscopies for which Medicare claims were submitted in 2013 a separate anesthesia claim was reported.

In light of these developments, we are concerned that the mere reference to ''screening colonoscopies'' in the definition of ''colorectal cancer screening tests'' has become inadequate. Indeed, we are convinced that the growing prevalence of separately provided anesthesia services in conjunction with screening colonoscopies reflects a change in practice patterns. Therefore, consistent with the authority delegated by section 1861(pp)(1)(D) of the Act, we believe it is appropriate to revise the definition of ''colorectal cancer screening tests'' to adequately reflect these new patterns. Accordingly, we are proposing to revise the definition of ''colorectal cancer screening tests'' at § 410.37(a)(1)(iii) to include anesthesia that is separately furnished in conjunction with screening colonoscopies.

Our proposal to revise the definition of ''colorectal cancer screening tests'' in this manner would further reduce our beneficiaries' cost-sharing obligations under Part B. Screening colonoscopies have been recommended with a grade of A by the United States Preventive Services Task Force (USPSTF) and § 410.152(l)(5) provides that Medicare Part B pays 100 percent of the Medicare payment amount established under the PFS for colorectal cancer screening tests except for barium enemas (which do not have a grade A or B recommendation from the USPSTF). This regulation is based on section 4104 of the Affordable Care Act, which amended section 1833(a)(1) of the Act to require 100 percent Medicare payment of the fee schedule amount for those ''preventive services'' that are appropriate for the individual and are recommended with a grade of A or B by the USPSTF. Section 4104 effectively waives any Part B coinsurance that would otherwise apply under section 1833(a)(1) of the Act for certain recommended preventive services, including screening colonoscopies. For additional discussion of the impact of section 4104 of the Affordable Care Act, and our prior rulemaking based on this provision see the CY 2011 PFS final rule with comment period (75 FR 73412 through 73431). We also note that under § 410.160(b)(7) colorectal cancer screening tests are not subject to the Part B annual deductible and do not count toward meeting that deductible.

In implementing the amendments made by section 4104 of the Affordable Care Act, we did not provide at that time for waiving the Part B deductible and coinsurance for covered anesthesia services separately furnished in conjunction with screening colonoscopies. At that time, we believed that our payment for the screening colonoscopy, which included payment for moderate sedation services, reflected the typical screening colonoscopy. Under the current regulations, Medicare beneficiaries who receive anesthesia from a different professional than the one furnishing the screening colonoscopy would be incurring costs for the coinsurance and deductible under Part B for those separate services. With the changes in the standard of care and shifting practice patterns toward increased use of anesthesia in conjunction with screening colonoscopy, beneficiaries who receive covered anesthesia services from a different professional than the one furnishing the colonoscopy would incur costs for any coinsurance and any unmet part of the deductible for this component of the service. However, our proposed revision to the definition of ''colorectal cancer screening tests'' would lead to Medicare paying 100 percent of the fee schedule amounts for screening colonoscopies, including any portion attributable to anesthesia services furnished by a separate practitioner in conjunction with such tests, under § 410.152(l)(5). Similarly, this revision would also mean that expenses incurred for a screening colonoscopy, and the anesthesia services furnished in conjunction with such tests, will not be subject to the Part B deductible and will not count toward meeting that deductible under § 410.160(b)(7). If adopted, we believe this proposal will encourage more beneficiaries to obtain a screening colonoscopy, which is consistent with the intent of the statutory provision to waive Medicare cost-sharing for certain recommended preventive services, and is consistent with the authority delegated to the Secretary in section 1861(pp)(1)(D) of the Act.

In light of the changing practice patterns for screening colonoscopies, continuing to require Medicare beneficiaries to bear the deductible and coinsurance expenses for separately billed anesthesia services furnished and covered by Medicare in conjunction with screening colonoscopies could become a significant barrier to these essential preventive services. As we noted when we implemented the provisions of the Affordable Care Act waiving the Part B deductible and coinsurance for these preventive services, the goal of these provisions was to eliminate financial barriers so that beneficiaries would not be deterred from receiving them (75 FR 73412). Therefore, we are exercising our authority under section 1861(pp)(1)(D) of the Act to propose a revision to the definition of colorectal cancer screening tests to encourage beneficiaries to seek these services by extending the waiver of coinsurance and deductible to anesthesia or sedation services

[1] Faulx, A.L. et al. (2005). The changing landscape of practice patterns regarding unsedated colonoscopy and propofol use: A national web survey. Gastrointestinal Endoscopy, 62. 9–15.

[2] Liu H, Waxman DA, Main R, Mattke S. Utilization of Anesthesia Services during Outpatient Endoscopies and Colonoscopies and Associated Spending in 2003–2009. (2012). JAMA, 307(11):1178–1184.

[3] Inadomi, J.M. et al. (2010). Projected increased growth rate of anesthesia professional–delivered sedation for colonoscopy and EGD in the United States: 2009 to 2015. *Gastrointestinal Endoscopy,* 72, 580–586.

furnished in conjunction with a screening colonoscopy.

We note that, in implementing these proposed revisions to the regulations, it will be necessary to establish a modifier for use when billing the relevant anesthesia codes for services that are furnished in conjunction with a screening colonoscopy and, thus, qualify for the waiver of the Part B deductible and coinsurance. If we adopt this proposal in the final rule, we will provide appropriate and timely information on this new modifier and its proper use so that physicians will be able to bill correctly for these services when the revised regulations become effective. We also note that the valuation of colonoscopy codes, which include moderate sedation, will be subject to the same proposed review as other codes that include moderate sedation, as discussed in section II.B.6 of this proposed rule.

I. Payment of Secondary Interpretation of Images

In general, Medicare makes one payment for the professional component of an imaging service for each technical component service that is furnished. Section 100.1, Chapter 13, of the Medicare Claims Processing Manual (Pub. 100–04) explains this policy in the context of EKGs and X-rays furnished in an Emergency Room. The manual section discusses the distinction between a ''review'' of an X-ray or EKG for which payment is included in the payment for the emergency department E/M payment, and the ''interpretation and report'' of an X-ray or EKG which can be billed separately and includes a written report addressing ''the findings, relevant clinical issues, and comparative data (when available).'' The section makes clear that a ''professional component'' interpretation service should only be billed for a full interpretation and report. The manual section goes on to explain that, in general, Medicare pays for only one interpretation of an EKG or X-ray service furnished to an emergency room patient. However, Medicare can pay for a second interpretation (which is billed using modifier −77) under ''unusual circumstances (for which documentation is provided).'' For instance, if an emergency room physician conducts an interpretation, identifies a questionable finding, and believes another physician's expertise is needed, then a second claim for an interpretation can be paid when furnished, for example, by a radiologist. The second interpretation must directly contribute to the diagnosis and treatment of the individual patient (rather than serving as a quality control measure), and the second interpretation must also be accompanied by a written report.

While a separate payment for the professional component for a radiology service is contingent upon meeting the conditions described in this section, practitioners bill Medicare and are paid for reviews of radiology images in other ways. For instance, review of a patient's previous radiology images is included and paid as part of the review of previous documentation in conjunction with E/M services. Reviews of extensive documentation and efforts to obtain previous documentation including existing imaging studies are considerations in deciding the appropriate level of complexity for evaluation and management services.[4]

In recent years, technological advances such as the integration of picture and archiving communications systems across health systems, growth in image sharing networks and health information exchange platforms through which providers can share images, and consumer-mediated exchange of images, have greatly increased physicians' access to existing diagnostic-quality radiology images. These advances offer new opportunities for physicians to reduce duplicative imaging, particularly with respect to high cost advanced diagnostic imaging modalities. For instance, a trauma patient transferred from a community hospital to a tertiary care center may arrive with high quality CT images sufficient to support an additional professional interpretation service. By accessing and utilizing these images to inform the diagnosis and record an interpretation in the medical record at the tertiary care facility, the provider and physicians may be able to avoid ordering substantially duplicative tests.

Questions have arisen as to whether and under what circumstances it would be appropriate for Medicare to permit payment under the PFS when physicians furnish subsequent interpretations of existing images, and whether uncertainty associated with payment for secondary interpretations inhibits physicians from seeking out, accessing, and utilizing existing images in cases where avoidance of a new study would result in savings to Medicare. We are seeking comment to assess whether there is an expanded set of circumstances under which it would be appropriate to allow more routine Medicare payment for a second professional component for radiology services, and whether such a policy would be likely to reduce the incidence of duplicative advanced imaging studies.

Specifically we are seeking comment on the following questions:

- For which radiology services are physicians currently conducting secondary interpretations, and what, if any, institutional policies are in place to determine when existing images are utilized? To what extent are physicians seeking payment for these secondary interpretations from Medicare or other payers?
- Should routine payment for secondary interpretations be restricted to certain high-cost advanced diagnostic imaging services, such as those defined as such under section 1834(e)(1)(B) of the Act, for example, diagnostic magnetic resonance imaging, computed tomography, and nuclear medicine (including positron emission tomography)?
- How should the value of routine secondary interpretations be determined? Is it appropriate to apply a modifier to current codes or are new HCPCS codes for secondary interpretations necessary?
- We believe most secondary interpretations would be likely to take place in the hospital setting. Are there other settings in which claims for secondary interpretations would be likely to reduce duplicative imaging services?
- Is there a limited time period within which an existing image should be considered adequate to support a secondary interpretation?
- Would allowing for more routine payment for secondary interpretations be likely to generate cost savings to Medicare by avoiding potentially duplicative imaging studies?
- What operational steps could Medicare take to ensure that any routine payment for secondary interpretations is limited to cases where a new imaging study has been averted while minimizing undue burden on providers or Part B contractors? For instance, steps might include restricting physicians' ability to refer multiple interpretations to another physician that is part of their network or group practice, requiring that physicians attach a physician's order for an averted imaging study to a claim for a secondary interpretation, or requiring physicians to identify the technical component of the existing image supporting the claim.

We seek comments on these questions, and welcome input on any additional considerations not mentioned here regarding the potential

[4] See, for example, 1997 Documentation Guidelines for Evaluation and Management Service, p. 45.

impact of allowing payment for secondary interpretation of images under other circumstances. Upon reviewing the comments received, we will consider whether any further action is appropriate, for instance, proposing under a future rulemaking to allow for payment of subsequent interpretations of advanced diagnostic images in lieu of duplicative studies.

J. Conditions Regarding Permissible Practice Types for Therapists in Private Practice

Section 1861(p) of the Act defines outpatient therapy services to include physical therapy, occupational therapy, and speech-language pathology services furnished by qualified occupational therapists, physical therapists, and speech-language pathologists in their offices and in the homes of beneficiaries. The regulations at §§ 410.59(c), 410.60(c), and 410.62(c) set forth special provisions for services furnished by therapists in private practice, including basic qualifications necessary to qualify as a supplier of occupational therapy (OT), physical therapy (PT), and speech-language pathology (SLP), respectively. As part of these basic qualifications, the current regulatory language includes descriptions of the various practice types for therapists' private practices. Based on our recent review of these three sections of our regulations, we are concerned that the language is not as clear as it could be—especially with regard to the relevance of whether a practice is incorporated. The regulations appear to make distinctions between unincorporated and incorporated practices, and some practice types are listed twice. Accordingly, we are proposing changes to the regulatory language to remove unnecessary distinctions and redundancies within the regulations for OT, PT, and SLP. We note that these proposed changes are for clarification only, and do not reflect any proposed change in our current policy.

To consistently specify the permissible practice types (a solo practice, partnership, or group practice; or as an employee of one of these) for suppliers of outpatient therapy services in private practice (for occupational therapists, physical therapists and speech-language pathologists), we propose to replace the regulatory text at § 410.59(c)(1)(ii)(A) through (E), § 410.60(c)(1)(ii)(A) though (E), and § 410.62(c)(1)(ii)(A) through (E).

K. Payments for Physicians and Practitioners Managing Patients on Home Dialysis

In the CY 2005 PFS final rule with comment period (69 FR 66357 through 66359), we established criteria for furnishing outpatient per diem ESRD-related services in partial month scenarios. We specified that use of per diem ESRD-related services is intended to accommodate unusual circumstances when the outpatient ESRD-related services would not be paid for under the monthly capitation payment (MCP), and that use of the per diem services are limited to the circumstances listed below.

- Transient patients—Patients traveling away from home (less than full month);
- Home dialysis patients (less than full month);
- Partial month where there were one or more face-to-face visits without the comprehensive visit and either the patient was hospitalized before a complete assessment was furnished, dialysis stopped due to death, or the patient received a kidney transplant.
- Patients who have a permanent change in their MCP physician during the month.

Additionally, we provided billing guidelines for partial month scenarios in the Medicare claims processing manual, publication 100–04, chapter 8, section 140.2.1. For center-based patients, we specified that if the MCP physician or practitioner furnishes a complete assessment of the ESRD beneficiary, the MCP physician or practitioner should bill for the full MCP service that reflects the number of visits furnished during the month. However, we did not extend this policy to home dialysis (less than a full month) because the home dialysis MCP service did not include a specific frequency of required patient visits. In other words, unlike the ESRD MCP service for center-based patients, a visit was not required for the home dialysis MCP service as a condition of payment.

In the CY 2011 PFS final rule with comment period (75 FR 73295 through 73296), we changed our policy for the home dialysis MCP service to require the MCP physician or practitioner to furnish at least one face-to-face patient visit per month as a condition of payment. However, we inadvertently did not modify our billing guidelines for home dialysis (less than a full month) to be consistent with partial month scenarios for center-based dialysis patients. Stakeholders have recently brought this inconsistency to our attention. After reviewing this issue, we are proposing to allow the MCP physician or practitioner to bill for the age appropriate home dialysis MCP service (as described by HCPCS codes 90963 through 90966) for the home dialysis (less than a full month) scenario if the MCP physician or practitioner furnishes a complete monthly assessment of the ESRD beneficiary and at least one face-to-face patient visit. For example, if a home dialysis patient was hospitalized during the month and at least one face-to-face outpatient visit and complete monthly assessment was furnished, the MCP physician or practitioner should bill for the full home dialysis MCP service. We believe that this proposed change to home dialysis (less than a full month) provides consistency with our policy for partial month scenarios pertaining to patients dialyzing in a dialysis center. If this proposal is adopted, we would modify the Medicare Claims Processing Manual to reflect the revised billing guidelines for home dialysis in the less than a full month scenario.

III. Other Provisions of the Proposed Regulations

A. Ambulance Extender Provisions

1. Amendment to Section 1834(l)(13) of the Act

Section 146(a) of the MIPPA amended section 1834(l)(13)(A) of the Act to specify that, effective for ground ambulance services furnished on or after July 1, 2008 and before January 1, 2010, the ambulance fee schedule amounts for ground ambulance services shall be increased as follows:

- For covered ground ambulance transports that originate in a rural area or in a rural census tract of a metropolitan statistical area, the fee schedule amounts shall be increased by 3 percent.
- For covered ground ambulance transports that do not originate in a rural area or in a rural census tract of a metropolitan statistical area, the fee schedule amounts shall be increased by 2 percent.

The payment add-ons under section 1834(l)(13) of the Act have been extended several times. Recently, section 1104(a) of the Pathway for SGR Reform Act of 2013, enacted on December 26, 2013, as Division B (Medicare and Other Health Provisions) of Pub L. 113–67, amended section 1834(l)(13)(A) of the Act to extend the payment add-ons described above through March 31, 2014. Subsequently, section 104(a) of the Protecting Access to Medicare Act of 2014 (Pub. L. 113–93, enacted on April 1, 2014) amended section 1834(l)(13)(A) of the Act to extend the payment add-ons again

through March 31, 2015. Thus, these payment add-ons also apply to covered ground ambulance transports furnished before April 1, 2015. We are proposing to revise § 414.610(c)(1)(ii) to conform the regulations to these statutory requirements. (For a discussion of past legislation extending section 1834(l)(13) of the Act, please see the CY 2014 PFS final rule (78 FR 74438 through 74439)).

These statutory requirements are self-implementing. A plain reading of the statute requires only a ministerial application of the mandated rate increase, and does not require any substantive exercise of discretion on the part of the Secretary.

2. Amendment to Section 1834(l)(12) of the Act

Section 414(c) of the Medicare Prescription Drug, Improvement and Modernization Act of 2003 (Pub. L. 108–173, enacted on December 8, 2003) (MMA) added section 1834(l)(12) to the Act, which specified that in the case of ground ambulance services furnished on or after July 1, 2004, and before January 1, 2010, for which transportation originates in a qualified rural area (as described in the statute), the Secretary shall provide for a percent increase in the base rate of the fee schedule for such transports. The statute requires this percent increase to be based on the Secretary's estimate of the average cost per trip for such services (not taking into account mileage) in the lowest quartile of all rural county populations as compared to the average cost per trip for such services (not taking into account mileage) in the highest quartile of rural county populations. Using the methodology specified in the July 1, 2004 interim final rule (69 FR 40288), we determined that this percent increase was equal to 22.6 percent. As required by the MMA, this payment increase was applied to ground ambulance transports that originated in a ''qualified rural area''; that is, to transports that originated in a rural area included in those areas comprising the lowest 25th percentile of all rural populations arrayed by population density. For this purpose, rural areas included Goldsmith areas (a type of rural census tract). This rural bonus is sometimes referred to as the ''Super Rural Bonus'' and the qualified rural areas (also known as ''super rural'' areas) are identified during the claims adjudicative process via the use of a data field included on the CMS-supplied ZIP code File.

The Super Rural Bonus under section 1834(l)(12) of the Act has been extended several times. Recently, section 1104(b) of the Pathway for SGR Reform Act of 2013, enacted on December 26, 2013, as Division B (Medicare and Other Health Provisions) of Public Law 113–67, amended section 1834(l)(12)(A) of the Act to extend this rural bonus through March 31, 2014. Subsequently, section 104(b) of the Protecting Access to Medicare Act of 2014 (Pub. L. 113–93, enacted on April 1, 2014) amended section 1834(l)(12)(A) of the Act to extend this rural bonus again through March 31, 2015. Therefore, we are continuing to apply the 22.6 percent rural bonus described above (in the same manner as in previous years), to ground ambulance services with dates of service before April 1, 2015 where transportation originates in a qualified rural area. Accordingly, we are proposing to revise § 414.610(c)(5)(ii) to conform the regulations to these statutory requirements. (For a discussion of past legislation extending section 1834(l)(12) of the Act, please see the CY 2014 PFS final rule (78 FR 74439 through 74440)).

These statutory provisions are self-implementing. Together, these statutory provisions require a 15-month extension of this rural bonus (which was previously established by the Secretary) through March 31, 2015, and do not require any substantive exercise of discretion on the part of the Secretary.

B. Proposed Changes in Geographic Area Delineations for Ambulance Payment

1. Background

Under the ambulance fee schedule, the Medicare program pays for ambulance transportation services for Medicare beneficiaries when other means of transportation are contraindicated by the beneficiary's medical condition, and all other coverage requirements are met. Ambulance services are classified into different levels of ground (including water) and air ambulance services based on the medically necessary treatment provided during transport.

These services include the following levels of service:

- For Ground—

++ Basic Life Support (BLS) (emergency and non-emergency)
++ Advanced Life Support, Level 1 (ALS1) (emergency and non-emergency)
++ Advanced Life Support, Level 2 (ALS2)
++ Paramedic ALS Intercept (PI)
++ Specialty Care Transport (SCT)

- For Air—

++ Fixed Wing Air Ambulance (FW)
++ Rotary Wing Air Ambulance (RW)

a. Statutory Coverage of Ambulance Services

Under sections 1834(l) and 1861(s)(7) of the Act, Medicare Part B (Supplemental Medical Insurance) covers and pays for ambulance services, to the extent prescribed in regulations, when the use of other methods of transportation would be contraindicated by the beneficiary's medical condition.

The House Ways and Means Committee and Senate Finance Committee Reports that accompanied the 1965 Social Security Amendments suggest that the Congress intended that—

- The ambulance benefit cover transportation services only if other means of transportation are contraindicated by the beneficiary's medical condition; and
- Only ambulance service to local facilities be covered unless necessary services are not available locally, in which case, transportation to the nearest facility furnishing those services is covered (H.R. Rep. No. 213, 89th Cong., 1st Sess. 37 and Rep. No. 404, 89th Cong., 1st Sess. Pt 1, 43 (1965)).

The reports indicate that transportation may also be provided from one hospital to another, to the beneficiary's home, or to an extended care facility.

b. Medicare Regulations for Ambulance Services

Our regulations relating to ambulance services are set forth at 42 CFR part 410, subpart B and 42 CFR part 414, subpart H. Section 410.10(i) lists ambulance services as one of the covered medical and other health services under Medicare Part B. Therefore, ambulance services are subject to basic conditions and limitations set forth at § 410.12 and to specific conditions and limitations included at § 410.40 and § 410.41. Part 414, subpart H, describes how payment is made for ambulance services covered by Medicare.

2. Provisions of the Proposed Rule

Historically, the Medicare ambulance fee schedule has used the same geographic area designations as the acute care hospital inpatient prospective payment system (IPPS) and other Medicare payment systems to take into account appropriate urban and rural differences. This promotes consistency across the Medicare program, and it provides for use of consistent geographic standards for Medicare payment purposes.

The current geographic areas used under the ambulance fee schedule are based on OMB standards published on

December 27, 2000 (65 FR 82228 through 82238) and Census 2000 data and Census Bureau population estimates for 2007 and 2008 (OMB Bulletin No. 10–02). For a discussion of OMB's delineation of Core-Based Statistical Areas (CBSAs) and our implementation of the CBSA definitions under the ambulance fee schedule, we refer readers to the preamble of the CY 2007 Ambulance Fee Schedule proposed rule (71 FR 30358 through 30361) and the CY 2007 PFS final rule (71 FR 69712 through 69716). On February 28, 2013, OMB issued OMB Bulletin No. 13–01, which established revised delineations for Metropolitan Statistical Areas (MSAs), Micropolitan Statistical Areas, and Combined Statistical Areas, and provided guidance on the use of the delineations of these statistical areas. A copy of this bulletin may be obtained at *http://www.whitehouse.gov/sites/default/files/omb/bulletins/2013/b-13–01.pdf.* According to OMB, ''[t]his bulletin provides the delineations of all Metropolitan Statistical Areas, Metropolitan Divisions, Micropolitan Statistical Areas, Combined Statistical Areas, and New England City and Town Areas in the United States and Puerto Rico based on the standards published on June 28, 2010, in the **Federal Register** (75 FR 37246–37252) and Census Bureau data.'' OMB defines an MSA as a CBSA associated with at least one urbanized area that has a population of at least 50,000, and a Micropolitan Statistical Area (referred to in this discussion as a Micropolitan Area) as a CBSA associated with at least one urban cluster that has a population of at least 10,000 but less than 50,000 (75 FR 37252). Counties that do not qualify for inclusion in a CBSA are deemed ''Outside CBSAs.'' We note that, when referencing the new OMB geographic boundaries of statistical areas, we are using the term ''delineations'' consistent with OMB's use of the term (75 FR 37249).

While the revisions OMB published on February 28, 2013 are not as sweeping as the changes made when we adopted the CBSA geographic designations for CY 2007, the February 28, 2013 OMB bulletin does contain a number of significant changes. For example, if we adopt the revised OMB delineations, there would be new CBSAs, urban counties that would become rural, rural counties that would become urban, and existing CBSAs that would be split apart. Because the bulletin was not issued until February 28, 2013, with supporting data not available until later, and because the changes made by the bulletin and their ramifications needed to be extensively reviewed and verified, we were unable to undertake such a lengthy process before publication of the CY 2014 PFS proposed rule, and thus, did not implement the changes to the OMB delineations under the ambulance fee schedule for CY 2014. We have reviewed our findings and impacts relating to the new OMB delineations, and find no compelling reason to further delay implementation. We believe it is important for the ambulance fee schedule to use the latest labor market area delineations available as soon as reasonably possible in order to maintain a more accurate and up-to-date payment system that reflects the reality of population shifts.

Additionally, in the FY 2015 IPPS proposed rule (79 FR 28055), we also proposed to adopt OMB's revised delineations to identify urban areas and rural areas for purposes of the IPPS wage index. For the reasons discussed above, we believe it would be appropriate to adopt the same geographic area delineations for use under the ambulance fee schedule as are used under the IPPS and other Medicare payment systems. Thus, we are proposing to implement the new OMB delineations as described in the February 28, 2013 OMB Bulletin No. 13–01 beginning in CY 2015 to more accurately identify urban and rural areas for ambulance fee schedule payment purposes. We believe that the updated OMB delineations more realistically reflect rural and urban populations, and that the use of such delineations under the ambulance fee schedule would result in more accurate payment. Under the ambulance fee schedule, consistent with our current definitions of urban and rural areas (§ 414.605), MSAs would continue to be recognized as urban areas, while Micropolitan and other areas outside MSAs, and rural census tracts within MSAs (as discussed below), would be recognized as rural areas.

In addition to the OMB's statistical area delineations, the current geographic areas used in the ambulance fee schedule also are based on the most recent version of the Goldsmith Modification. Section 1834(l) of the Act requires that we use the most recent version of the Goldsmith Modification to determine rural census tracts within MSAs. These rural census tracts are considered rural areas under the ambulance fee schedule (see § 414.605). In the CY 2007 PFS final rule (71 FR 69714 through 69716), we adopted the most recent (at that time) version of the Goldsmith Modification, designated as Rural-Urban Commuting Area (RUCA) codes. RUCA codes use urbanization, population density, and daily commuting data to categorize every census tract in the country. For a discussion about RUCA codes, we refer the reader to the CY 2007 PFS final rule (71 FR 69714 through 69716). As stated previously, on February 28, 2013, OMB issued OMB Bulletin No. 13–01, which established revised delineations for Metropolitan Statistical Areas, Micropolitan Statistical Areas, and Combined Statistical Areas, and provided guidance on the use of the delineations of these statistical areas. Several modifications of the RUCA codes were necessary to take into account updated commuting data and the revised OMB delineations. We refer readers to the U.S. Department of Agriculture's Economic Research Service Web site for a detailed listing of updated RUCA codes found at *http://www.ers.usda.gov/data-products/rural-urban-commuting-area-codes.aspx.* The updated RUCA code definitions were introduced in late 2013 and are based on data from the 2010 decennial census and the 2006–10 American Community Survey. We are proposing to adopt the most recent modifications of the RUCA codes beginning in CY 2015, to recognize levels of rurality in census tracts located in every county across the nation, for purposes of payment under the ambulance fee schedule. If we adopt the most recent RUCA codes, many counties that are designated as urban at the county level based on population would have rural census tracts within them that would be recognized as rural areas through our use of RUCA codes.

The 2010 Primary RUCA codes are as follows:

(1) Metropolitan area core: primary flow with an urbanized area (UA).

(2) Metropolitan area high commuting: primary flow 30 percent or more to a UA.

(3) Metropolitan area low commuting: primary flow 10 to 30 percent to a UA.

(4) Micropolitan area core: primary flow within an Urban Cluster of 10,000 to 49,999 (large UC).

(5) Micropolitan high commuting: primary flow 30 percent or more to a large UC.

(6) Micropolitan low commuting: primary flow 10 to 30 percent to a large UC.

(7) Small town core: primary flow within an Urban Cluster of 2,500 to 9,999 (small UC).

(8) Small town high commuting: primary flow 30 percent or more to a small UC.

(9) Small town low commuting: primary flow 10 to 30 percent to a small UC.

(10) Rural areas: primary flow to a tract outside a UA or UC.

Based on this classification, and consistent with our current policy (71 FR 69715), we would continue to designate any census tracts falling at or above RUCA level 4.0 as rural areas for purposes of payment for ambulance services under the ambulance fee schedule. As discussed in the CY 2007 PFS final rule (71 FR 69715), the Office of Rural Health Policy within the Health Resources and Services Administration (HRSA) determines eligibility for its rural grant programs through the use of the RUCA code methodology. Under this methodology, HRSA designates any census tract that falls in RUCA level 4.0 or higher as a rural census tract. In addition to designating any census tracts falling at or above RUCA level 4.0 as rural areas, under the updated RUCA code definitions, HRSA has also designated as rural census tracts, those census tracts with RUCA codes 2 or 3 that are at least 400 square miles in area with a population density of no more than 35 people. We refer readers to HRSA's Web site: *ftp://ftp.hrsa.gov/ruralhealth/Eligibility2005.pdf* for additional information. Consistent with the HRSA guidelines discussed above, we are proposing, beginning in CY 2015, to designate as rural areas (1) those census tracts that fall at or above RUCA level 4.0, and (2) those census tracts that fall within RUCA levels 2 or 3 that are at least 400 square miles in area with a population density of no more than 35 people. As discussed in the CY 2007 PFS final rule (71 FR 69715), we continue to believe that HRSA's guidelines accurately identify rural census tracts throughout the country, and thus would be appropriate to apply for ambulance payment purposes. We invite comments on this proposal.

The adoption of the most current OMB delineations and the updated RUCA codes would affect whether certain areas are recognized as rural or urban. The distinction between urban and rural is important for ambulance payment purposes because urban and rural transports are paid differently. The determination of whether a transport is urban or rural is based on the point of pick-up for the transport, and thus a transport is paid differently depending on whether the point of pick-up is in an urban or a rural area. During claims processing, geographic designation of urban, rural, or super rural is assigned to each claim for an ambulance transport based on the point of pick-up ZIP code that is indicated on the claim.

Currently, section 1834(l)(12) of the Act (as amended by section 104(b) of the PAMA) specifies that, for services furnished during the period July 1, 2004 through March 31, 2015, the payment amount for the ground ambulance base rate is increased by a ''percent increase'' (Super Rural Bonus) where the ambulance transport originates in a ''qualified rural area,'' which is a rural area that we determine to be in the lowest 25th percentile of all rural populations arrayed by population density (also known as a ''super rural area''). We implement this Super Rural Bonus in § 414.610(c)(5)(ii). Adoption of the revised OMB delineations and the updated RUCA codes would have no negative impact on ambulance transports in super rural areas, as none of the current super rural areas would lose their status due to the revised OMB delineations and the updated RUCA codes.

The adoption of the new OMB delineations and the updated RUCA codes would affect whether or not transports would be eligible for other rural adjustments under the ambulance fee schedule statute and regulations. For ground ambulance transports where the point of pick-up is in a rural area, the mileage rate is increased by 50 percent for each of the first 17 miles (§ 414.610(c)(5)(i)). For air ambulance services where the point of pick-up is in a rural area, the total payment (base rate and mileage rate) is increased by 50 percent (§ 414.610(c)(5)(i)). Furthermore, under section 1834(l)(13) of the Act (as amended by section 104(a) of the PAMA), for ground ambulance transports furnished through March 31, 2015, transports originating in rural areas are paid based on a rate (both base rate and mileage rate) that is 3 percent higher than otherwise is applicable. (See also § 414.610(c)(1)(ii)).

If we adopt OMB's revised delineations and the updated RUCA codes, ambulance providers and suppliers that pick up Medicare beneficiaries in areas that would be Micropolitan or otherwise outside of MSAs based on OMB's revised delineations or in a rural census tract of an MSA based on the updated RUCA codes (but are currently within urban areas) may experience increases in payment for such transports because they may be eligible for the rural adjustment factors discussed above, while those ambulance providers and suppliers that pick up Medicare beneficiaries in areas that would be urban based on OMB's revised delineations and the updated RUCA codes (but are currently in Micropolitan Areas or otherwise outside of MSAs, or in a rural census tract of an MSA) may experience decreases in payment for such transports because they would no longer be eligible for the rural adjustment factors discussed above.

The use of the revised OMB delineations and the updated RUCA codes would mean the recognition of new urban and rural boundaries based on the population migration that occurred over a 10-year period, between 2000 and 2010. Based on the latest United States Postal Service (USPS) ZIP code file, there are a total of 42,914 ZIP codes in the U.S. The geographic designations for approximately 99.48 percent of ZIP codes would be unchanged by OMB's revised delineations and the updated RUCA codes. There are a similar number of ZIP codes that would change from rural to urban (122, or 0.28 percent) and from urban to rural (100, or 0.23 percent). In general, it is expected that ambulance providers and suppliers in 100 ZIP codes within 11 states may experience payment increases if we adopt the revised OMB delineations and the updated RUCA codes, as these areas would be redesignated from urban to rural. The state of Ohio would have the most ZIP codes changing from urban to rural with a total of 40, or 2.69 percent. Ambulance providers and suppliers in 122 ZIP codes within 22 states may experience payment decreases if we adopt the revised OMB delineations and the updated RUCA codes, as these areas would be redesignated from rural to urban. The state of West Virginia would have the most ZIP codes changing from rural to urban (17, or 1.82 percent), while Connecticut would have the greatest percentage of ZIP codes changing from rural to urban (15 ZIP codes, or 3.37 percent). Our findings are illustrated in Table 17.

TABLE 17—ZIP CODES ANALYSIS BASED ON OMB'S REVISED DELINEATIONS AND UPDATED RUCA CODES

State	Total ZIP codes	Total ZIP codes changed rural to urban	Percentage of total ZIP codes	Total ZIP codes changed urban to rural	Percentage of total ZIP codes	Total ZIP codes not changed	Percentage of total ZIP codes not changed
AK	276	0	0.00	0	0.00	276	100.00
AL	854	0	0.00	0	0.00	854	100.00
AR	725	0	0.00	3	0.41	722	99.59
AS	1	0	0.00	0	0.00	1	100.00
AZ	569	0	0.00	0	0.00	569	100.00
CA	2723	0	0.00	0	0.00	2723	100.00
CO	677	0	0.00	0	0.00	677	100.00
CT	445	15	3.37	0	0.00	430	96.63
DC	301	0	0.00	0	0.00	301	100.00
DE	99	1	1.01	0	0.00	98	98.99
EK	63	0	0.00	0	0.00	63	100.00
EM	856	0	0.00	3	0.35	853	99.65
FL	1513	5	0.33	0	0.00	1508	99.67
FM	4	0	0.00	0	0.00	4	100.00
GA	1032	4	0.39	0	0.00	1028	99.61
GU	21	0	0.00	0	0.00	21	100.00
HI	143	0	0.00	0	0.00	143	100.00
IA	1080	5	0.46	0	0.00	1075	99.54
ID	335	0	0.00	0	0.00	335	100.00
IL	1628	0	0.00	0	0.00	1628	100.00
IN	1000	1	0.10	14	1.40	985	98.50
KY	1030	0	0.00	0	0.00	1030	100.00
LA	739	2	0.27	0	0.00	737	99.73
MA	751	0	0.00	4	0.53	747	99.47
MD	630	9	1.43	0	0.00	621	98.57
ME	505	0	0.00	0	0.00	505	100.00
MH	2	0	0.00	0	0.00	2	100.00
MI	1185	4	0.34	8	0.68	1173	98.99
MN	1043	1	0.10	0	0.00	1042	99.90
MP	3	0	0.00	0	0.00	3	100.00
MS	541	0	0.00	0	0.00	541	100.00
MT	411	0	0.00	0	0.00	411	100.00
NC	1101	12	1.09	5	0.45	1084	98.46
ND	418	0	0.00	0	0.00	418	100.00
NE	632	0	0.00	0	0.00	632	100.00
NH	292	0	0.00	0	0.00	292	100.00
NJ	747	0	0.00	0	0.00	747	100.00
NM	438	0	0.00	0	0.00	438	100.00
NV	257	0	0.00	0	0.00	257	100.00
NY	2246	4	0.18	0	0.00	2242	99.82
OH	1487	6	0.40	40	2.69	1441	96.91
OK	791	0	0.00	0	0.00	791	100.00
OR	494	6	1.21	0	0.00	488	98.79
PA	2244	8	0.36	0	0.00	2236	99.64
PR	177	0	0.00	0	0.00	177	100.00
PW	2	0	0.00	0	0.00	2	100.00
RI	91	0	0.00	0	0.00	91	100.00
SC	543	7	1.29	0	0.00	536	98.71
SD	418	0	0.00	0	0.00	418	100.00
TN	814	2	0.25	0	0.00	812	99.75
TX	2726	0	0.00	1	0.04	2725	99.96
UT	359	0	0.00	0	0.00	359	100.00
VA	1277	8	0.63	17	1.33	1252	98.04
VI	16	0	0.00	0	0.00	16	100.00
VT	309	0	0.00	0	0.00	309	100.00
WA	744	2	0.27	0	0.00	742	99.73
WI	919	3	0.33	0	0.00	916	99.67
WK	711	0	0.00	2	0.28	709	99.72
WM	342	0	0.00	0	0.00	342	100.00
WV	936	17	1.82	3	0.32	916	97.86
WY	198	0	0.00	0	0.00	198	100.00
Totals	42914	122	0.28	100	0.23	42692	99.48

We believe that the most current OMB statistical area delineations, coupled with the updated RUCA codes, more accurately reflect the contemporary urban and rural nature of areas across the country, and thus we believe that use of the most current OMB delineations and RUCA codes under the ambulance fee schedule would enhance

the accuracy of ambulance fee schedule payments. We invite comments on our proposal to implement the new OMB delineations and the updated RUCA codes as discussed above beginning in CY 2015, for purposes of payment under the Medicare ambulance fee schedule.

C. Clinical Laboratory Fee Schedule

In the CY 2014 PFS final rule with comment period (78 FR 74440–74445, 74820), we finalized a process under which we would reexamine the payment amounts for test codes on the Clinical Laboratory Fee Schedule (CLFS) for possible payment revision based on technological changes beginning with the CY 2015 proposed rule, and we codified this process at § 414.511. After we finalized this process, Congress enacted the PAMA. Section 216 of the PAMA creates new section 1834A of the Act, which requires us to implement a new Medicare payment system for clinical diagnostic laboratory tests based on private payor rates. Section 216 of the PAMA also rescinds the statutory authority in section 1833(h)(2)(A)(i) of the Act for adjustments based on technological changes for tests furnished on or after April 1, 2014 (PAMA's enactment date). As a result of these provisions, we are not proposing any revisions to payment amounts for test codes on the CLFS based on technological changes and are proposing to remove § 414.511. Instead, we will establish through rulemaking the parameters for the collection of private payor rate information and other requirements to implement section 216 of the PAMA.

D. Removal of Employment Requirements for Services Furnished ''Incident to'' Rural Health Clinics (RHC) and Federally Qualified Health Center (FQHC) Visits

1. Background

Rural Health Clinics (RHCs) and Federally Qualified Health Centers (FQHCs) furnish physicians' services; services and supplies incident to the services of physicians; nurse practitioner (NP), physician assistant (PA), certified nurse-midwife (CNM), clinical psychologist (CP), and clinical social worker (CSW) services; and services and supplies incident to the services of NPs, PAs, CNMs, CPs, and CSWs. They may also furnish diabetes self-management training and medical nutrition therapy (DSMT/MNT), transitional care management services, and in some cases, visiting nurse services furnished by a registered professional nurse or a licensed practical nurse. (For additional information on requirements for furnishing services in RHCs and FQHCs, see Chapter 13 of the CMS Benefit Policy Manual.)

In the May 2, 2014 final rule with comment period (79 FR 25436) entitled ''Prospective Payment System for Federally Qualified Health Centers; Changes to Contracting Policies for Rural Health Clinics; and Changes to Clinical Laboratory Improvement Amendments of 1988 Enforcement Actions for Proficiency Testing Referral,'' we removed the regulatory requirements that NPs, PAs, CNMs, CSWs, and CPs furnishing services in a RHC must be employees of the RHC. RHCs are now allowed to contract with NPs, PAs, CNMs, CSWs, and CPs, as long as at least one NP or PA is employed by the RHC, as required under section 1861(aa)(2)(iii) of the Act.

Services furnished in RHCs and FQHCs by nurses, medical assistants, and other auxiliary personnel are considered ''incident to'' a RHC or FQHC visit furnished by a RHC or FQHC practitioner. The regulations at § 405.2413(a)(6), § 405.2415(a)(6), and § 405.2452(a)(6) state that services furnished incident to an RHC or FQHC visit must be furnished by an employee of the RHC or FQHC. Since there is no separate benefit under Medicare law that specifically authorizes payment to nurses, medical assistants, and other auxiliary personnel for their professional services, they cannot bill the program directly and receive payment for their services, and can only be remunerated when furnishing services to Medicare patients in an ''incident to'' capacity.

2. Provisions of Proposed Rule

To provide RHCs and FQHCs with as much flexibility as possible to meet their staffing needs, we are proposing to revise § 405.2413(a)(5), § 405.2415(a)(5) and § 405.2452(a)(5) and delete § 405.2413(a)(6), § 405.2415(a)(6) and § 405.2452(a)(6) to remove the requirement that services furnished incident to an RHC or FQHC visit must be furnished by an employee of the RHC or FQHC to allow nurses, medical assistants, and other auxiliary personnel to furnish incident to services under contract in RHCs and FQHCs. We believe that removing the requirements will provide RHCs and FQHCs with additional flexibility without adversely impacting the quality or continuity of care.

E. Access to Identifiable Data for the Center for Medicare and Medicaid Innovation Models

1. Background and Statutory Authority

Section 3021 of the Affordable Care Act amended the Social Security Act to include a new section 1115A, which established the Center for Medicare and Medicaid Innovation (Innovation Center). Section 1115A tasks the Innovation Center with testing innovative payment and service delivery models that could reduce program expenditures while preserving and/or enhancing the quality of care furnished to individuals under titles XVIII, XIX, and XX of the Act. The Secretary is also required to conduct an evaluation of each model tested.

Evaluations will typically include quantitative and qualitative methods to assess the impact of the model on quality of care and health care expenditures. To comply with the statutory requirement to evaluate all models conducted under section 1115A of the Act, we will conduct rigorous quantitative analyses of the impact of the model test on health care expenditures, as well as an assessment of measures of the quality of care furnished under the model test. Evaluations will also include qualitative analyses to capture the qualitative differences between model participants, and to form the context within which to interpret the quantitative findings. Through the qualitative analyses, we will assess the experiences and perceptions of model participants, providers, and individuals affected by the model.

In the evaluations we use advanced statistical methods to measure effectiveness. Our methods are intended to provide results that meet a high standard of evidence, even when randomization is not feasible. To successfully carry out evaluations of Innovation Center models, we must be able to determine specifically which individuals are receiving services from or are the subject of the intervention being tested by the entity participating in the model test. Identification of such individuals is necessary for a variety of purposes, including the construction of control groups against which model performance can be compared. In addition, to determine whether the observed impacts are due to the model being tested and not due to differences between the intervention and comparison groups, our evaluations will have to account for potential confounding factors at the individual level, which will require the ability to identify every individual associated

with the model test, control or comparison groups, and the details of the intervention at the individual level.

Evaluations will need to consider such factors as outcomes, clinical quality, adverse effects, access, utilization, patient and provider satisfaction, sustainability, potential for the model to be applied on a broader scale, and total cost of care. Individuals receiving services from or who are the subjects of the intervention will be compared to clinically, socio-demographically, and geographically similar matched individuals along various process, outcome, and patient-reported measures. Research questions in a typical evaluation will include, but are not limited to, the following:

- Clinical Quality:

++ Did the model improve or have a negative impact on clinical process measures, such as adherence to evidence-based guidelines? If so, how, how much, and for which individuals?

++ Did the model improve or have a negative impact on clinical outcome measures, such as mortality rates, and the incidence and prevalence of chronic conditions? If so, how, how much, and for which individuals?

++ Did the model improve or have a negative impact on access to care? If so, how, how much, and for which individuals?

++ Did the model improve or have a negative impact on care coordination among providers? If so, how, how much, and for which individuals?

++ Did the model improve or have a negative impact on medication management? If so, how, how much, and for which individuals?

- Patient Experience:

++ Did the model improve or have a negative impact on patient-provider communication? If so, how, how much, and for which individuals?

++ Did the model improve or have a negative impact on patient experiences of care, quality of life, or functional status? If so, how, how much, and for which individuals?

- Utilization/Expenditures:

++ Did the model result in decreased utilization of emergency department visits, hospitalizations, and readmissions? If so how, how much, and for which individuals?

++ Did the model result in increased utilization of physician or pharmacy services? If so how, how much, and for which individuals?

++ Did the model result in decreased total cost of care? Were changes in total costs of care driven by changes in utilization for specific types of settings or health care services? What specific aspects of the model led to these changes? Were any savings due to improper cost-shifting to the Medicaid program?

To carry out this research we must have access to patient records not generally available to us. As such, we propose to exercise our authority in section 1115A(b)(4)(B) of the Act to establish requirements for states and other entities participating in the testing of past, present, and future models under section 1115A of the Act to collect and report information that we have determined is necessary to monitor and evaluate such models. Thus, we propose to require model participants, and providers and suppliers working under the models operated by such participants to produce such individually identifiable health information and such other information as the Secretary identifies as being necessary to conduct the statutorily mandated research described above. Such research will include the monitoring and evaluation of such models. Further, we view engagement with other payers, both public and private, as a critical driver of the success of these models. CMS programs constitute only a share of any provider's revenue. Therefore, efforts to improve quality and reduce cost are more likely to be successful if signals are aligned across payers. Section 1115A of the Act specifically allows the Secretary of Health and Human Services to consider, in selecting which models to choose for testing, ''whether the model demonstrates effective linkage with other public sector or private sector payers.'' Multi-payer models, such as but not limited to the Comprehensive Primary Care model, will conduct quality measurement across all patients regardless of payer in order to maximize alignment and increase efficiency. Construction of multi-payer quality measures requires the ability to identify all individuals subject to the model test regardless of payer. In addition, section 1115A also permits the Secretary to consider models that allow states to test and evaluate systems of all-payer payment reform for the medical care of residents of the state, including dual eligible individuals. Under the State Innovation Model (SIM), the Innovation Center is testing the ability for state governments to accelerate transformation. The premise of the SIM initiative is to support Governor-sponsored, multi-payer models that are focused on public and private sector collaboration to transform the state's delivery system. States have policy and regulatory authorities, as well as ongoing relationships with private payers, health plans, and providers that can accelerate delivery system reform. SIM models must impact the preponderance of care in the state and are expected to work with public and private payers to create multi-payer alignment. The evaluation of SIM will include all populations and payers involved in the state initiative, which in many cases includes private payers. The absence of identifiable data from private payers would result in considerable limitations on the level of evaluation conducted. Therefore, under this authority, we also propose to require the submission of identifiable health and utilization information for patients of private payers treated by providers/suppliers participating in the testing of a model under section 1115A of the Act when an explicit purpose of the model test is to engage private sector payers. If finalized, this regulation will provide clear legal authority for HIPAA Covered Entities to disclose any required protected health information. Identifiable data submitted by entities participating in the testing of models under section 1115A of the Act will meet CMS Acceptable Risks Safe Guards (ARS) guidelines. When data is expected to be exchanged over the internet such exchange will also meet all E-Gov requirements. In accordance with the requirements of the Privacy Act of 1974, these data will be covered under a CMS established system of records (System No. 09–70–0591), which serves as the Master system for all demonstrations, evaluations, and research studies administered by the Innovation Center. These data will be stored until the evaluation is complete and all necessary policy deliberations have been finalized.

2. Provisions of the Proposed Regulations

Wherever possible, evaluations will make use of claims, assessment, and enrollment data available through CMS' existing administrative systems. However, evaluations will generally also need to include additional data not available through existing CMS administrative systems. As such, depending on the particular project, CMS or its contractor will require the production of the minimum data necessary to carry out the statutorily mandated research work described in section E.1. of this proposed rule. Such data may include the identities of the patients served under the model, relevant clinical details about the services furnished and outcomes

achieved, and any confounding factors that might influence the evaluation results achieved through the delivery of such services. For illustrative purposes, below are examples of some of the types of information that could be required to carry out an evaluation, and for which the evaluator would need patient level identifiers.

- Utilization data not otherwise available through existing Center for Medicare & Medicaid Services (CMS) systems.
- Beneficiary, patient, participant, family, and provider experiences.
- Beneficiary, patient, participant, and provider rosters with identifiers that allow linkages across time and datasets.
- Beneficiary, patient, participant, and family socio-demographic and ethnic characteristics.
- Care management details, such as details regarding the provision of services, payments or goods to beneficiaries, patients, participants, families, or other providers.
- Beneficiary, patient, and participant functional status and assessment data.
- Beneficiary, patient, and participant health behaviors.
- Clinical data, such as, but not limited to lab values and information from EHRs.
- Beneficiary, patient, participant quality data not otherwise available through claims.
- Other data relevant to identified outcomes—for example, participant employment status, participant educational degrees pursued/achieved, and income.

We invite public comment on this proposal to mandate the production of the individually identifiable information necessary to conduct the statutorily mandated research under section 1115A of the Act.

In addition, we are proposing a new subpart K in part 403 to implement section 1115A of the Act.

F. Local Coverage Determination Process for Clinical Diagnostic Laboratory Testing

1. Background

On April 1, 2014, the PAMA was enacted and section 216 addresses Medicare payment and coverage policies for clinical diagnostic laboratory testing. In regard to coverage policies, section 216 amended the statute by adding section 1834A(g) of the Act, which establishes mandates related to issuance of local coverage policies by the Medicare Administrative Contractors (MACs) for clinical diagnostic laboratory tests. The law states: ''A medicare administrative contractor shall only issue a coverage policy with respect to a clinical diagnostic laboratory test in accordance with the process for making a local coverage determination (as defined in section 1869(f)(2)(B)), including the appeals and review process for local coverage determinations under part 426 of title 42, Code of Federal Regulations (or successor regulations).''

Section 1869(f)(2)(B) of the Act defines a local coverage determination (LCD) as ''a determination by a fiscal intermediary or a carrier under Part A or Part B, as applicable, respecting whether or not a particular item or service is covered on an intermediary-or carrier-wide basis under such parts, in accordance with section 1862(a)(1)(A) of the Act.''

Since the new law requires that the process for making local coverage determinations be used as the vehicle for local coverage policies for clinical diagnostic laboratory tests, it is important that we carefully consider the LCD process that is used today and determine if there are certain, limited aspects of the LCD process that may provide an opportunity to better fit the needs of this particular area of medicine. In addition to the current LCD process, we will examine how the LCD process was applied to a pilot project for molecular diagnostic tests as we are learning important lessons from this ongoing pilot. We believe lessons learned from this project can be applied to all clinical diagnostic laboratory testing and not just molecular diagnostic tests (which are encompassed under the PAMA requirement for local coverage policies). In this proposed process, we will review the current LCD process, as well as the pilot in support of a proposal to create, consistent with the requirements set forth under the PAMA, an expedited LCD process for clinical diagnostic laboratory testing.

The current LCD process (Table 18) requires that a draft LCD be published in the Medicare Coverage Database (MCD). This serves as a public announcement that an LCD is being developed. Once a draft LCD is published, at least 45 calendar days are provided for public comment. We note that the National Coverage Determination (NCD) process only requires a 30-day public comment period after a proposed NCD is published. This timeframe is based on the NCD statutory requirements under 1862(l) of the Act and in our experience at the national policy level, 30 days is generally adequate to allow for robust public comment.

After the draft LCD is made public, MACs are required to hold an open meeting to discuss the draft LCD with stakeholders. In addition to the open meeting, the MACs present the draft policy to the Carrier Advisory Committee (CAC). These two aspects of LCD development can be time-consuming and may involve logistical complications that extend the length of time it takes to reach a final policy. We note that unlike the national advisory committee, the Medicare Evidence Development and Coverage Advisory Committee (MEDCAC), the CAC meetings and open stakeholder meetings are scheduled to discuss many LCD policies at a time as opposed to narrowly focusing on one policy. Due to the resources required, the constant development of LCDs and scheduling considerations, MACs do not hold ad hoc meetings. Both the open stakeholder meetings and the CAC meetings are scheduled far in advance, generally at the start of the calendar year before MACs know which policies will be presented in these forums. The timing of the open stakeholder meeting, CAC meeting, and public release of the draft LCD are all factors in determining which LCDs are on the agendas. Because of these scheduling issues, some LCDs may not have to wait as long for a CAC meeting or an open stakeholder meeting while others could have lengthy delays. In contrast, at the national level, MEDCACs are not convened for every NCD and separate open meetings are also not a part of the NCD process. Based on our experience with the NCD process over the past decade, we believe that public input is now readily available through more technologically advanced mechanisms of collecting public comment. For example, the information gathered and knowledge gained from the LCD open stakeholder meetings may now be acquired more broadly through the collection of public comments via web-based applications. CMS and its contractors are receiving more input on their policies because of these technology advances, which were not as available to the public when the LCD manual was originally written approximately 25 years ago. Medical literature, clinical practice guidelines, complicated charts and graphs can now be easily submitted electronically through the public comment process. Questions or follow-up information from a specific commenter can be addressed through conference calls or email. In addition, through these processes, all public comments are available to everyone rather than to the few people who attend meetings in

person. In addition to publishing a draft LCD, MACs publish a document that provides a summary of all of the comments received and responses to those comments. This allows the public to understand the reasoning behind the final LCD and to know that all of the public comments were taken under consideration as the MAC developed the final policy. Since this information is made readily available in writing, an open meeting is no longer necessary for the public to be heard. There are more efficient methods available to the public to submit comments and additional evidence that supports or rejects the application of a draft LCD.

Somewhat different considerations apply to CACs, which are state-specific bodies representing the clinical expertise of a geographic area. CACs allow a unique opportunity for CAC members to provide practical information regarding a draft policy since they are the entities actually delivering services in the community. However, like MEDCACs, a CAC may not be needed in all instances for the creation or revision of an LCD. CAC meeting agendas can quickly fill up with draft LCDs since the CAC meetings are scheduled far in advance. We believe CACs may be a better resource and used more efficiently in the development of LCDs if the MAC is able to select which draft LCDs are presented to a CAC for discussion, as opposed to taking all LCDs to the CAC. Of note, NCDs that go before the MEDCAC are selected by the agency and it is not part of the process for every NCD.

Under the current LCD process, after the close of the comment period and the required meetings, the MAC publishes a final LCD. As stated earlier, the MAC must also respond to any comments received, via a comment/response document. A notice period of at least 45 calendar days is then required before the LCD can take effect. While it takes time for the provider community and the claims processing systems to adapt to changes in coverage, a notice period delays the date of when coverage may be become effective.

In addition to evaluating the effectiveness of certain aspects of the LCD implementation process, we are also examining a pilot project that CMS launched with a single MAC, Palmetto GBA, on November 1, 2011. While the pilot discussed in this section only includes molecular diagnostic (genetic) laboratory tests, a subset of all clinical diagnostic lab tests, we believe the pilot's design and some of the lessons learned from the pilot can be applied to all clinical diagnostic laboratory tests

For background, the universe of molecular diagnostic laboratory tests is vast and the current LCD process can be lengthy for some of these innovative tests, which are technically complex. For example, multiple molecular diagnostic tests designated to diagnose the same disease may rely on different underlying technologies and, therefore, have significantly different performance characteristics. It would not be appropriate to assume that all tests for a particular condition behave the same. Because of these complexities, we have an obligation to consider the evidence at a granular level; that is, to ensure coverage of the appropriate test for the appropriate Medicare beneficiary.

The pilot project's long-term goal was to assist clinicians by determining whether the molecular diagnostic tests they order actually perform as expected and, thus, ultimately improve clinical care. This goal stemmed from concerns that some tests were being marketed directly to physicians without information regarding the test's performance. The pilot project sought to achieve this goal by identifying all of the molecular diagnostic tests that Medicare was covering in the Palmetto MAC jurisdiction. This required the ability to uniquely identify tests through test registration and assignment of an identifier. In addition, the MAC reviewed clinical statements made by the manufacturer for each molecular diagnostic test to ensure the test was delivering what was being claimed. Essentially, the pilot project facilitated claims processing, tracked utilization, and determined clinical validity, utility and coverage through technical assessments of published test data.

As part of the pilot project, Palmetto wrote a single molecular diagnostic laboratory testing LCD that outlined the framework they would follow in determining coverage of all molecular diagnostic tests in their jurisdiction. Additionally, that LCD included a list of covered molecular diagnostic tests. Moreover, Palmetto issued several articles addressing various other aspects of the LCD implementation process, including coding guidelines, billing and medical review procedures. There is much information that is not contained in the body of an LCD that is necessary for consistent and predictable claims processing and payment.

We believe a process that ensures transparency and stakeholder participation can be achieved without utilizing the current LCD process in its entirety. Some key aspects of the process should be maintained such as allowing public comment on draft LCDs and requiring MAC responses to public comments. However, we believe other aspects could be streamlined to allow more timely decisions and a more efficient process.

2. Proposed New LCD Process for Clinical Diagnostic Laboratory Tests

After assessment of the current LCD process, the Palmetto pilot project, the requirements of the PAMA, and the vast field of clinical diagnostic laboratory tests, including molecular diagnostic tests, we are proposing a revised LCD process for all new draft clinical diagnostic laboratory test LCDs published on or after January 1, 2015. This process would carefully balance the need for an expedited process to handle the vast number of clinical diagnostic laboratory tests, including the rapidly growing universe of molecular diagnostic tests. The National Institutes of Health (NIH)-sponsored Genetic Testing Registry (GTR) currently includes 16,000 registered genetic tests for over 4,000 conditions (*www.ncbi.nlm.nih.gov/gtr/*). We have a responsibility to ensure that appropriate tests are covered by Medicare and that coverage is limited to tests for which the test results are used by the ordering physician in the management of the beneficiary's specific medical problem (as required in § 410.32(a)). Coverage for diagnostic laboratory tests may be achieved through various policy vehicles, including an NCD, LCD, or claim-by-claim adjudication at the local contractor level. For most molecular diagnostic tests, coverage has been determined by the MACs, through LCDs or claim-by-claim adjudication. Few such tests have been the subject of an NCD, to date. This concentration of coverage decisions at the local level, and the responsibility of the agency to allow coverage of appropriate tests provide additional reasons to provide MACs with a more streamlined LCD process.

Based on these considerations, we are proposing a new LCD process that would apply only to clinical diagnostic laboratory tests. Specifically, we are proposing to establish a process MACs must follow when developing clinical diagnostic laboratory test LCDs and encouraging MACs to collaborate on such policies across jurisdictions. We propose that the process apply to all new clinical diagnostic laboratory testing draft LCDs published on or after January 1, 2015. Consistent with Chapter 13, section 13.7.3 of the Medicare Program Integrity Manual (PIM), however, we further propose that this process will not apply to clinical diagnostic laboratory testing LCDs that are being revised for the following

reasons: to liberalize an existing LCD; being issued for a compelling reason; making a non-substantive correction; providing a clarification; making a non-discretionary coverage or diagnosis coding update; making a discretionary diagnosis coding update that does not restrict; or revising to effectuate an Administrative Law Judge's decision on a Benefits Improvement and Protection Act (BIPA) 522 challenge.

The proposed new process would allow any person or entity to request an LCD or the MAC to initiate an LCD regarding clinical diagnostic laboratory testing. After this external request or internal initiation, the MAC would publish a draft LCD in the Medicare Coverage Database (*http://www.cms.gov/medicare-coverage-database/overview-and-quick-search.aspx*), thereby making the draft LCD publicly available. Next, a minimum of 30 calendar days for public comment would be required. We note that in the event that stakeholders and/or members of the public are not able to submit comments within the 30 calendar day window, the MAC would have discretion to extend the comment period. We would expect the draft LCDs to outline the criteria the MAC would use when determining whether a specific clinical diagnostic laboratory test or a group of tests are covered or non-covered. The MAC would review, analyze, and take under consideration all public comments on the draft LCD. For draft LCDs where the MAC determines that a CAC meeting would contribute to the quality of the final policy, the MAC has discretion to take draft LCDs to the CAC. In the event the MAC involves the CAC in the development of an LCD, we would require that the public comment period be extended to allow for the CAC to be held before the final policy is issued. The MAC would be required to respond to all public comments in writing and post their responses on a public Web site. As a final step, the MAC would publish the final LCD in the Medicare Coverage Database no later than 45 calendar days after the close of the comment period. We believe 45 days to be an adequate time for the MAC to take all comments under consideration, prepare responses to those comments, and develop a final policy.

The final LCD would be effective immediately upon publication. This effective date would be different than under the current LCD process (which includes a notice period of at least 45 calendar days before a final LCD is effective); however, based on our experience with NCDs, which are also effective upon publication, we believe this is an efficient mechanism to make tests available to beneficiaries more quickly.

3. Reconsideration Process

The proposed process for developing clinical diagnostic laboratory testing LCDs would not change the LCD reconsideration process as outlined in the PIM in Chapter 13. This section of the manual allows interested parties the opportunity to request reconsideration of an LCD. Under the proposed process, the MACs would continue to implement all sections of the PIM that relate to the LCD reconsideration process.

4. LCD Challenge Process

The proposed process for clinical diagnostic laboratory testing LCDs would also not change any of the current review processes available to an aggrieved party. An aggrieved party would continue to be able to challenge an LCD according to the requirements set out in 42 CFR part 426.

As discussed previously, we believe an administratively more efficient process is needed for local coverage determinations for clinical diagnostic laboratory testing. If we continue to require that MACs follow all steps in the current LCD process, we fear that LCDs will not be able to be finalized quickly enough for even a fraction of the thousands of new clinical diagnostic (particularly molecular) tests developed each year.

We believe this proposed new process for clinical diagnostic laboratory tests will allow for public dialogue, notification of stakeholders, and expedited beneficiary access to covered tests. Table 18 summarizes the differences between the current LCD process and the proposed new LCD process for the development of clinical diagnostic laboratory testing policies.

TABLE 18—COMPARISON OF CURRENT LCD PROCESS VERSUS PROPOSED LCD PROCESS FOR CLINICAL DIAGNOSTIC LABORATORY TESTS

Current LCD process	Proposed LCD process for clinical diagnostic laboratory tests
Issue Draft LCD in Medicare Coverage Database, which identifies criteria used for determining coverage under statutory "reasonable and necessary" standard.	Issue Draft LCD in Medicare Coverage Database, which identifies criteria used for determining coverage under statutory "reasonable and necessary" standard.
Public comment period of 45 calendar days	Public comment period of 30 calendar days with option to extend.
Present LCD at CAC & discussion at open stakeholder meetings	Optional CAC meeting. No requirement for open stakeholder meeting.
Publication of Comment/Response Document and final LCD (no specified time of publication after the close of the comment period).	Publication of Comment/Response Document and final LCD within 45 calendar days of the close of the draft LCD comment period.
Notice period of 45 calendar days with the final LCD effective the 46th calendar day.	Final LCD effective on the date of publication.
Interested parties may request reconsideration of an LCD	Interested parties may request reconsideration of an LCD.
An aggrieved party may further challenge an LCD	An aggrieved party may further challenge an LCD.

In summary, we believe this proposed process would meet all the requirements of the PAMA, would be open and transparent, would allow for public input, and would be administratively efficient. We are proposing this process only for clinical diagnostic laboratory testing when coverage policies are developed by a MAC through an LCD; it would not apply to the NCD process or other vehicles of coverage including claim-by-claim adjudication. We believe the proposed process would balance stakeholders' concerns about ensuring an open and transparent process with the ability to efficiently review clinical laboratory tests for coverage. We encourage public comment on all aspects of this proposed process.

G. Private Contracting/Opt-Out

1. Background

Effective January 1, 1998, section 1802(b) of the Act permits certain physicians and practitioners to opt-out of Medicare if certain conditions are met, and to furnish through private contracts services that would otherwise be covered by Medicare. For those physicians and practitioners who opt-

out of Medicare in accordance with section 1802(b) of the Act, the mandatory claims submission and limiting charge rules of section 1848(g) of the Act would not apply. As a result, if the conditions necessary for an effective opt-out are met, physicians and practitioners are permitted to privately contract with Medicare beneficiaries and to charge them without regard to Medicare's limiting charge rules. Regulations governing the requirements and procedures for private contracts appear at 42 CFR part 405, subpart D.

a. Opt-Out Determinations (§ 405.450)

The private contracting regulation at § 405.450 describes certain opt-out determinations made by Medicare, and the process that physicians, practitioners, and beneficiaries may use to appeal those determinations. Section 405.450(a) describes the process available for physicians or practitioners to appeal Medicare enrollment determinations related to opting out of the program, and § 405.450(b) describes the process available to challenge payment determinations related to claims for services furnished by physicians who have opted out. Both provisions refer to § 405.803, the Part B claims appeals process that was in place at the time the opt-out regulations were issued (November 2, 1998). When those regulations were issued, a process for a physician or practitioner to appeal enrollment related decisions had not been implemented in regulation. Thus, to ensure an appeals process was available to physicians and practitioners for opt-out related issues, we chose to utilize the existing claims appeals process in § 405.803 for both enrollment and claims related appeals.

In May 16, 2012 **Federal Register** (77 FR 29002), we published a final rule entitled ''Medicare and Medicaid Program; Regulatory Provisions to Promote Program Efficiency, Transparency and Burden Reduction.'' In that final rule, we deleted the provisions relating to initial determinations, appeals, and reopenings of Medicare Part A and Part B claims, and relating to determinations and appeals regarding an individual's entitlement to benefits under Medicare Part A and Part B, which were contained in part 405, subparts G and H (including § 405.803) because these provisions were obsolete and had been replaced by the regulations at part 405, subpart I. We inadvertently neglected to revise the cross-reference in § 405.450(a) and (b) of the private contracting regulations to direct appeals of opt-out determinations through the current appeal process. However, it is important to note that our policy regarding the appeal of opt-out determinations did not change when the appeal regulations at part 405, subpart I were finalized.

The procedures set forth in current part 498 establish the appeals procedures regarding decisions made by Medicare that affect enrollment in the program. We believe this process, and not the appeal process in part 405, subpart I, is the appropriate channel for physicians and practitioners to challenge an enrollment related opt-out decision made by Medicare. There are now two different sets of appeal regulations for initial determinations; and the appeal of enrollment related opt-out determinations is more like the types of determinations now addressed under part 498 than those under part 405, subpart I. Specifically, the appeal process under part 405, subpart I focus on reviews of determinations regarding beneficiary entitlement to Medicare and claims for benefits for particular services. The appeal process under part 498 is focused on the review of determinations regarding the participation or enrollment status of providers and suppliers. Enrollment related opt-out determinations involve only the status of particular physician or practitioners under Medicare, and do not involve beneficiary eligibility or claims for specific services. As such, the appeal process under part 498 is better suited for the review of enrollment related opt-out determinations.

However, we do not believe the enrollment appeals process established in part 498 is the appropriate mechanism for challenging payment decisions on claims for services furnished by a physician and practitioner who has opted out of the program. Appeals for such claims should continue to follow the appeals procedures now set forth in part 405 subpart I.

b. Definitions, Requirements of the Opt Out Affidavit, Effects of Opting Out of Medicare, Application to Medicare Advantage Contracts (§§ 405.400, 405.420(e), 405.425(a), and 405.455)

Section 405.400 sets forth certain definitions for purposes of the private contracting regulations. Among the defined terms is ''Emergency care services'' which means services furnished to an individual for treatment of an ''emergency medical condition'' as that term is defined in § 422.2. The cross-referenced regulation at § 422.2 included within the definition of emergency care services was deleted on June 29, 2000 (65 FR 40314) and at that time we inadvertently neglected to revise that cross-reference. The cross-reference within the definition of emergency care services should have been amended at that time to cite the definition of ''emergency services'' in § 424.101.

The private contracting regulations at § 405.420(e), § 405.425(a) and § 405.455 all use the term Medicare+Choice when referring to Part C plans. However, we no longer use the term Medicare+Choice when referring to Part C plans; instead the plans are referred to as Medicare Advantage plans. When part 422 of the regulations was updated on January 28, 2005 (70 FR 4741), we inadvertently neglected to revise § 405.420(e), § 405.425(a) and § 405.455 to replace the term Medicare+Choice with Medicare Advantage plan.

2. Provisions of the Proposed Regulation

For the reasons discussed above, we propose that a determination described in § 405.450(a) (relating to the status of opt-out or private contracts) is an initial determination for purposes of § 498.3(b), and a physician or practitioner who is dissatisfied with a Medicare determination under § 405.450(a) may utilize the enrollment appeals process currently available for providers and suppliers in part 498. In addition, we propose that a determination described in § 405.450(b) (that payment cannot be made to a beneficiary for services furnished by a physician or practitioner who has opted out) is an initial determination for the purposes of § 405.924 and may be challenged through the existing claims appeals procedures in part 405 subpart I. Accordingly, we propose that the cross reference to § 405.803 in § 405.450(a) be replaced with a cross reference to § 498.3(b). We also propose that the cross reference to § 405.803 in § 405.450(b) be replaced with a cross reference to § 405.924. We also propose corresponding edits to § 498.3(b) and § 405.924 to note that the determinations under § 405.450(a) and (b), respectively, are initial determinations.

For the reasons discussed above, we also propose that the definition of Emergency care services at § 405.400 be revised to cite the definition of Emergency services in § 424.101 and that all references to Medicare+Choice in § 405.420(e), § 405.425(a) and § 405.455 be replaced with the term ''Medicare Advantage.''

H. Solicitation of Comments on the Payment Policy for Substitute Physician Billing Arrangements

1. Background

In accordance with section 1842(b)(6) of the Act, no payment under Medicare Part B may be made to anyone other than to the beneficiary to whom a service was furnished or to the physician or other person who furnished the service. However, there are certain limited exceptions to this general prohibition. For example, section 1842(b)(6)(D) of the Act describes an exception for substitute physician billing arrangements, which states that ''payment may be made to a physician for physicians' services (and services furnished incident to such services) furnished by a second physician to patients of the first physician if (i) the first physician is unavailable to provide the services; (ii) the services are furnished pursuant to an arrangement between the two physicians that (I) is informal and reciprocal, or (II) involves per diem or other fee-for-time compensation for such services; (iii) the services are not provided by the second physician over a continuous period of more than 60 days or are provided over a longer continuous period during all of which the first physician has been called or ordered to active duty as a member of a reserve component of the Armed Forces; and (iv) the claim form submitted to the [contractor] for such services includes the second physician's unique identifier . . . and indicates that the claim meets the requirements of this subparagraph for payment to the first physician.'' Section 1842(b)(6) of the Act is self-implementing and we have not interpreted the statutory provisions through regulations.

In practice, section 1842(b)(6)(D) of the Act generally allows for two types of substitute physician billing arrangements: (1) An informal reciprocal arrangement where doctor A substitutes for doctor B on an occasional basis and doctor B substitutes for doctor A on an occasional basis; and (2) an arrangement where the services of the substitute physician are paid for on a per diem basis or according to the amount of time worked. Substitute physicians in the second type of arrangement are sometimes referred to as ''locum tenens'' physicians. It is our understanding that locum tenens physicians are substitute physicians who often do not have a practice of their own, are geographically mobile, and work on an as-needed basis as independent contractors. They are utilized by physician practices, hospitals, and health care entities enrolled in Part B as Medicare suppliers to cover for physicians who are absent for reasons such as illness, pregnancy, vacation, or continuing medical education. Also, we have heard anecdotally that locum tenens physicians are used to fill staffing needs (for example, in physician shortage areas) or, on a temporary basis, to replace physicians who have permanently left a medical group or employer.

We are concerned about the operational and program integrity issues that result from the use of substitute physicians to fill staffing needs or to replace a physician who has permanently left a medical group or employer. For example, although our Medicare enrollment rules require physicians and physician groups or organizations to notify us promptly of any enrollment changes (including reassignment changes) (see § 424.516(d)), processing delays or miscommunication between the departing physician and his or her former medical group or employer regarding which party would report the change to Medicare could result in the Provider Transaction Access Number (PTAN) that links the departed physician and his or her former medical group remaining ''open'' or ''attached'' for a period of time. During such period, both the departed physician and the departed physician's former medical group might bill Medicare under the departed physician's National Provider Identifier (NPI) for furnished services. This could occur where a substitute physician is providing services in place of the departed physician in the departed physician's former medical group, while the departed physician is also providing services to beneficiaries following departure from the former group. Operationally, either or both types of claims could be rejected or denied, even though the claims filed by the departed physician were billed appropriately. Moreover, the continued use of a departed physician's NPI to bill for services furnished to beneficiaries by a substitute physician raises program integrity issues, particularly if the departed physician is unaware of his or her former medical group or employer's actions.

Finally, as noted above, section 1842(b)(6)(D)(iv) of the Act requires that the claim form submitted to the contractor include the substitute physician's unique identifier. Currently, the unique identifier used to identify a physician is the physician's NPI. Prior to the implementation of the NPI, the Unique Physician Identification Number (UPIN) was used. Because a substitute physician's NPI is not captured on the CMS–1500 claim form or on the appropriate electronic claim, physicians and other entities that furnish services to beneficiaries through the use of a substitute physician are required to enter a modifier on the CMS–1500 claim form or on the appropriate electronic claim indicating that the services were furnished by a substitute physician; and to keep a record of each service provided by the substitute physician, associated with the substitute physician's UPIN or NPI; and to make this record available to the contractor upon request. (See Medicare Claims Processing Manual (Pub. 100–4), Chapter 1, Sections 30.2.10 and 30.2.11) However, having a NPI or UPIN does not necessarily mean that the substitute physician is enrolled in the Medicare program. Without being enrolled in Medicare, we do not know whether the substitute physician has the proper credentials to furnish the services being billed under section 1842(b)(6)(D) of the Act or if the substitute physician is sanctioned or excluded from Medicare. The importance of enrollment and the resulting transparency afforded the Medicare program and its beneficiaries was recognized by the Congress when it included in the Affordable Care Act a requirement that physicians and other eligible NPPs enroll in the Medicare program if they wish to order or refer certain items or services for Medicare beneficiaries. This includes those physicians and other eligible NPPs who do not and will not submit claims to a Medicare contractor for the services they furnish. We are seeking comments regarding how to achieve similar transparency in the context of substitute physician billing arrangements for the identity of the individual actually furnishing the service to a beneficiary.

2. Solicitation of Comments

To help inform our decision whether and, if so, how to address the issues discussed in section III.H.1., and whether to adopt regulations interpreting section 1842(b)(6)(D) of the Act, we are soliciting comments on the policy for substitute physician billing arrangements. We note that any regulations would be proposed in a future rulemaking with opportunity for public comment. Through this solicitation, we hope to understand better current industry practices with respect to the use of substitute physicians and the impact that policy changes limiting the use of substitute physicians might have on beneficiary access to physician services. Therefore,

we are soliciting comments on the following:

(1) How physicians and other entities are currently utilizing the services of substitute physicians and billing for such services. We are interested in specific examples, including the circumstances that give rise to the need for the substitute physician, the types of services furnished by the substitute physician, the billing for the services of the substitute physician, the length of time that the substitute physician's services are needed or used, and any other information relevant to the substitute physician billing arrangement.

(2) When a physician is ''unavailable'' to provide services for purposes of section 1842(b)(6)(D) of the Act. We are particularly interested in comments from physicians, medical groups and other entities that utilize the services of substitute physicians regarding when a regular physician is ''unavailable.''

(3) Whether we should limit substitute physician billing arrangements to those ''between the two physicians'' (rather than between a medical group, employer or other entity and the substitute physician) as stated in section 1842(b)(6)(D)(ii) of the Act.

(4) Whether we should permit the sequential use of multiple substitute physicians provided that each substitute physician furnishes services for the unavailable physician for no more than 60 continuous days.

(5) Whether we should have identical or different criteria for substitute physician billing arrangements under sections 1842(b)(6)(D)(ii)(I) and (II) of the Act; that is, whether we should treat reciprocal substitute physician billing arrangements differently than paid (or locum tenens) substitute physician billing arrangements.

(6) Whether substitute physicians furnishing services to Medicare beneficiaries should be required to enroll in the Medicare program.

(7) Whether entities submitting claims for services furnished by substitute physicians should include on the CMS–1500 claim form or on the appropriate electronic claim the identity of the substitute physician and, if so, whether the CMS–1500 claim form or the appropriate electronic claim should be revised to accommodate such a requirement.

(8) Whether we should place limitations on the use of the substitute physician and billing for his or her services (for example, limits on the length of time that an individual substitute physician may provide services to replace a particular departed physician; limits on the overall length of time that substitute physicians may provide services to replace a particular departed physician; a requirement that the departing physician be a party to the substitute physician billing arrangement; or permitting the use of a substitute physician only where a demonstrated staffing need can be shown). We are also seeking comments regarding whether these limitations should be different depending on the circumstances underlying or requiring the use of the substitute physician.

(9) Whether we should limit or prohibit the use of substitute physician billing arrangements in certain programs or for certain purposes (for example, the Medicare Shared Savings Program or determining whether a physician is a member of a group practice for purposes of the physician self-referral law).

(10) The impact of substitute physician billing arrangements on CMS programs that rely on the Provider Enrollment, Chain and Ownership System (PECOS) (for example, the Medicare Shared Savings Program), enforcement of the physician self-referral law, and program integrity oversight.

(11) Additional program integrity safeguards that should be included in our substitute physician billing policy to protect against program and patient abuse. These could include, but are not limited to, qualifications for substitute physicians related to exclusion status, quality of care, or licensure and certifications.

(12) Any other issues that we should consider in determining whether to propose regulations interpreting section 1842(b)(6)(D) of the Act.

I. Reports of Payments or Other Transfers of Value to Covered Recipients

1. Background

In the February 8, 2013 **Federal Register** (78 FR 9458), we published the ''Transparency Reports and Reporting of Physician Ownership or Investment Interests'' final rule which implemented section 1128G to the Act, as added by section 6002 of the Affordable Care Act. Under section 1128G(a)(1) of the Act, manufacturers of covered drugs, devices, biologicals, and medical supplies (applicable manufacturers) are required to submit on an annual basis information about certain payments or other transfers of value made to physicians and teaching hospitals (collectively called covered recipients) during the course of the preceding calendar year. Section 1128G(a)(2) of the Act requires applicable manufacturers and applicable group purchasing organizations (GPOs) to disclose any ownership or investment interests in such entities held by physicians or their immediate family members, as well as information on any payments or other transfers of value provided to such physician owners or investors. The implementing regulations are at 42 CFR Part 402, subpart A, and Part 403, subpart I. We have organized these reporting requirements under the ''Open Payments (Sunshine Act)'' program.

The Open Payments program creates transparency around the nature and extent of relationships that exist between drug, device, biologicals and medical supply manufacturers, and physicians and teaching hospitals (covered recipients and physician owner or investors). The implementing regulations describe procedures for applicable manufacturers and applicable GPOs to submit electronic reports detailing payments or other transfers of value and ownership or investment interests provided to covered recipients and physician owners or investors are codified at § 403.908.

Since the publication and implementation of the February 8, 2013 final rule, various stakeholders have provided feedback to CMS regarding certain aspects of these reporting requirements. Specifically, § 403.904(g)(1) excludes the reporting of payments associated with certain continuing education events, and § 403.904(c)(8) requires reporting of the marketed name for drugs and biologicals but makes reporting the marketed name of devices or medical supplies optional. We are proposing a change to § 403.904(g) to correct an unintended consequence of the current regulatory text. Additionally, at § 403.904(c)(8), we are proposing to make the reporting requirements consistent by requiring the reporting of the marketed name for drugs, devices, biologicals, or medical supplies which are associated with a payment or other transfer of value.

Additionally, at § 403.902, we propose to remove the definition of a ''covered device'' because we believe it is duplicative of the definition of ''covered drug, device, biological or medical supply'' which is codified in the same section. We also propose to require the reporting of the following distinct forms of payment: stock; stock option; or any other ownership interests specified in § 403.904(d)(3) to collect more specific data regarding the forms of payment.

2. Continuing Education Exclusion (§ 403.904(g)(1))

In the February 8, 2013 final rule, many commenters recommended that accredited or certified continuing education payments to speakers should not be reported because there are safeguards already in place, and they are not direct payments to a covered recipient. In the final rule preamble, we noted that ''industry support for accredited or certified continuing education is a unique relationship'' (78 FR 9492). Section 403.904(g)(1) states that payments or other transfers of value provided as compensation for speaking at a continuing education program need not be reported if the following three conditions are met:

- The event at which the covered recipient is speaking must meet the accreditation or certification requirements and standards for continuing education for one of the following organizations: the Accreditation Council for Continuing Medical Education (ACCME); the American Academy of Family Physicians (AAFP); the American Dental Association's Continuing Education Recognition Program (ADA CERP); the American Medical Association (AMA); or the American Osteopathic Association (AOA).
- The applicable manufacturer does not pay the covered recipient speaker directly.
- The applicable manufacturer does not select the covered recipient speaker or provide the third party (such as a continuing education vendor) with a distinct, identifiable set of individuals to be considered as speakers for the continuing education program.

Since the implementation of § 403.904(g)(1), other accrediting organizations have requested that payments made to speakers at their events also be exempted from reporting. These organizations have stated that they follow the same accreditation standards as the organizations specified in § 403.904(g)(1)(i). Other stakeholders have recommended that the exemption be removed in its entirety stating removal of the exclusion will allow for consistent reporting for compensation provided to physician speakers at all continuing education events, as well as transparency regarding compensation paid to physician speakers. Many stakeholders raised concerns that the reporting requirements are inconsistent because certain continuing education payments are reportable, while others are not. CMS' apparent endorsement or support to organizations sponsoring continuing education events was an unintended consequence of the final rule.

After consideration of these comments, we propose to remove the language in § 403.904(g) in its entirety, in part because it is redundant with the exclusion in § 403.904(i)(1). That provision excludes indirect payments or other transfers of value where the applicable manufacturer is ''unaware'' of, that is, ''does not know,'' the identity of the covered recipient during the reporting year or by the end of the second quarter of the following reporting year. When an applicable manufacturer or applicable GPO provides funding to a continuing education provider, but does not either select or pay the covered recipient speaker directly, or provide the continuing education provider with a distinct, identifiable set of covered recipients to be considered as speakers for the continuing education program, CMS will consider those payments to be excluded from reporting under § 403.904(i)(1). This approach is consistent with our discussion in the preamble to the final rule, in which we explained that if an applicable manufacturer conveys ''full discretion'' to the continuing education provider, those payments are outside the scope of the rule (78 FR 9492). In contrast, when an applicable manufacturer conditions its financial sponsorship of a continuing education event on the participation of particular covered recipients, or pays a covered recipient directly for speaking at such an event, those payments are subject to disclosure.

We considered two alternative approaches to address this issue. First, we explored expanding the list of organizations in § 403.904(g)(1)(i) by name, however, we believe that this approach might imply CMS's endorsement of the named continuing education providers over others. Second, we considered expansion of the organizations in § 403.904(g)(1)(i) by articulating accreditation or certification standards that would allow a CME program to qualify for the exclusion. This approach is not easily implemented because it would require evaluating both the language of the standards, as well as the enforcement of the standards of any organization professing to meet the criteria. We seek comments on both alternatives presented, including commenters' suggestions about what standards, if any, CMS should incorporate.

3. Reporting of Marketed Name (§ 403.904(c)(8))

Section 1128G(a)(1)(A)(vii) of the Act requires applicable manufacturers to report the name of the covered drug, device, biological or medical supply associated with that payment, if the payment is related to ''marketing, education, or research'' of a particular covered drug, device, biological, or medical supply. Section 403.904(c)(8)(i) requires applicable manufacturers to report the marketed name for each drug or biological related to a payment or other transfer of value. At § 403.904(c)(8)(ii), we require an applicable manufacturer of devices or medical supplies to report one of the following: the marketed name; product category; or therapeutic area. In the February 8, 2013, final rule, we provided applicable manufactures with flexibility when it was determined that the marketed name for all devices and medical supplies may not be useful for the general audience. We did not define product categories or therapeutic areas in § 403.904(c). However, since implementation of the February 8, 2013 final rule and the development of the Open Payments system, we have determined that making the reporting requirements for marketed name across drugs, biologics, devices and medical supplies will make the data fields consistent within the system, and also enhance consumer's use of the data.

Accordingly, we propose to revise § 403.904(c)(8) to require applicable manufacturers to report the marketed name for all covered and non-covered drugs, devices, biologicals or medical supplies. We believe this would facilitate consistent reporting for the consumers and researchers using the data displayed publicly on the Open Payments. Manufacturers would still have the option to report product category or therapeutic area, in addition to reporting the market name, for devices and medical supplies.

Section 403.904(d)(3) requires the reporting of stock, stock option or any other ownership interest. We are proposing to require applicable manufacturers to report such payments as distinct categories. This will enable us to collect more specific data regarding the forms of payment made by applicable manufacturers. After issuing the February 8, 2013 final rule and the development of the Open Payments system, we determined that this specificity will increase the ease of data aggregation within the system, and also enhance consumer's use of the data. We seek comments on the extent to which users of this data set find this disaggregation to be useful, and whether this change presents operational or other issues on the part of applicable manufacturers.

4. Summary of Proposed Changes

As noted above in this section, we propose the following changes to Part 403, subpart I:

- Deleting the definition of ''covered device'' at § 403.902.
- Deleting § 403.904(g) and redesignating the remaining paragraphs in that section.
- Revising § 403.904(c)(8) to require the reporting of the marketed name of the related covered and non-covered drugs, devices, biologicals, or medical supplies, unless the payment or other transfer of value is not related to a particular covered or non-covered drug, device, biological or medical supply.
- Revising § 403.904(d) to require the reporting of the reporting of stock, stock option or any other options as distinct categories.

Data collection requirements would begin January 1, 2015 according to this proposed rule for applicable manufacturers and applicable group purchasing organizations.

J. Physician Compare Web site

1. Background and Statutory Authority

Section 10331(a)(1) of the Affordable Care Act, required that, by no later than January 1, 2011, we develop a Physician Compare Internet Web site with information on physicians enrolled in the Medicare program under section 1866(j) of the Act, as well as information on other eligible professionals (EPs) who participate in the Physician Quality Reporting System (PQRS) under section 1848 of the Act.

CMS launched the first phase of Physician Compare on December 30, 2010 (*http://www.medicare.gov/physiciancompare*). In the initial phase, we posted the names of EPs that satisfactorily submitted quality data for the 2009 PQRS, as required by section 1848(m)(5)(G) of the Act.

Section 10331(a)(2) of the Affordable Care Act also required that, no later than January 1, 2013, and for reporting periods that began no earlier than January 1, 2012, we implement a plan for making publicly available through Physician Compare information on physician performance that provides comparable information on quality and patient experience measures. We met this requirement in advance of January 1, 2013, as outlined below, and plan to continue addressing elements of the plan through rulemaking.

To the extent that scientifically sound measures are developed and are available, we are required to include, to the extent practicable, the following types of measures for public reporting:

- Measures collected under the Physician Quality Reporting System (PQRS).
- An assessment of patient health outcomes and functional status of patients.
- An assessment of the continuity and coordination of care and care transitions, including episodes of care and risk-adjusted resource use.
- An assessment of efficiency.
- An assessment of patient experience and patient, caregiver, and family engagement.
- An assessment of the safety, effectiveness, and timeliness of care.
- Other information as determined appropriate by the Secretary.

As required under section 10331(b) of the Affordable Care Act, in developing and implementing the plan, we must include, to the extent practicable, the following:

- Processes to ensure that data made public are statistically valid, reliable, and accurate, including risk adjustment mechanisms used by the Secretary.
- Processes for physicians and eligible professionals whose information is being publicly reported to have a reasonable opportunity, as determined by the Secretary, to review their results before posting to Physician Compare. We have established a 30-day preview period for all measurement performance data that will allow physicians and other EPs to view their data as it will appear on the Web site in advance of publication on Physician Compare (77 FR 69166 and 78 FR 74450). Details of the preview process will be communicated directly to those with measures to preview and will also be published on the Physician Compare Initiative page (*http://www.cms.gov/Medicare/Quality-Initiatives-Patient-Assessment-Instruments/physician-compare-initiative/*) in advance of the preview period.
- Processes to ensure the data published on Physician Compare provides a robust and accurate portrayal of a physician's performance.
- Data that reflects the care provided to all patients seen by physicians, under both the Medicare program and, to the extent applicable, other payers, to the extent such information would provide a more accurate portrayal of physician performance.
- Processes to ensure appropriate attribution of care when multiple physicians and other providers are involved in the care of the patient.
- Processes to ensure timely statistical performance feedback is provided to physicians concerning the data published on Physician Compare.
- Implementation of computer and data infrastructure and systems used to support valid, reliable and accurate reporting activities.

Section 10331(d) of the Affordable Care Act requires us to consider input from multi-stakeholder groups when selecting quality measures for Physician Compare. We also continue to get input from stakeholders through a variety of means including rulemaking and different forms of stakeholder outreach (Town Hall meetings, Open Door Forums, webinars, education and outreach, Technical Expert Panels, etc.). In developing the plan for making information on physician performance publicly available through Physician Compare, section 10331(e) of the Affordable Care Act requires the Secretary, as the Secretary determines appropriate, to consider the plan to transition to value-based purchasing for physicians and other practitioners that was developed under section 131(d) of the MIPPA.

Under section 10331(f) of the Affordable Care Act, we are required to submit a report to the Congress by January 1, 2015, on Physician Compare development, and include information on the efforts and plans to collect and publish data on physician quality and efficiency and on patient experience of care in support of value-based purchasing and consumer choice. Section 10331(g) of the Affordable Care Act provides that any time before that date, we may continue to expand the information made available on Physician Compare.

We believe section 10331 of the Affordable Care Act supports our overarching goals of providing consumers with quality of care information that will help them make informed decisions about their health care, while encouraging clinicians to improve the quality of care they provide to their patients. In accordance with section 10331 of the Affordable Care Act, we plan to publicly report physician performance information on Physician Compare.

2. Public Reporting of Performance and Other Data

Since the initial launch of the Web site, we have continued to build on and improve Physician Compare. On June 27, 2013, we launched a full redesign of Physician Compare bringing significant improvements including a complete overhaul of the underlying database and a new Intelligent Search feature, addressing two of our stakeholders' primary critiques of the site—the accuracy and currency of the database and the limitations of the search

function—and considerably improving Web site functionality and usability. PECOS, as the sole source of verified Medicare professional information, is the primary source of administrative information on Physician Compare. With the redesign, however, we incorporated the use of Medicare Fee-For-Service claims information to verify the information in PECOS to help ensure only the most current and accurate information is included on the site.

Currently, Web site users can view information about approved Medicare professionals such as name, primary and secondary specialties, practice locations, group affiliations, hospital affiliations that link to the hospital's profile on Hospital Compare as available, Medicare Assignment status, education, languages spoken, and American Board of Medical Specialties (ABMS) board certification information. In addition, for group practices, users can also view group practice names, specialties, practice locations, Medicare assignment status, and affiliated professionals.

We post on the Web site the names of individual EPs who satisfactorily report under the PQRS, as well as those EPs who are successful electronic prescribers under the Medicare Electronic Prescribing (eRx) Incentive Program. Physician Compare contains a link to a downloadable database of all information on Physician Compare (*https://data.medicare.gov/data/physician-compare*), including information on this quality program participation. In addition, there is a section on each Medicare professional's profile page indicating with a green check mark the quality programs under which the EP satisfactorily or successfully reported. We propose to continue to include this information annually in the year following the year it is reported (for example, 2015 PQRS reporting will be included on the Web site in 2016).

With the Physician Compare redesign, we added a quality programs section to each group practice profile page in order to indicate which group practices are satisfactorily participating in the Group Practice Reporting Option (GPRO) under the PQRS or are successful electronic prescribers under the eRx Incentive Program. We have also included a notation and check mark for individuals that successfully participate in the Medicare EHR Incentive Program, as authorized by section 1848(o)(3)(D) of the Act. We propose to continue to include this information annually in the year following the year it is reported (for example, 2015 data will be included on the Web site in 2016).

As we finalized in the 2014 PFS final rule with comment period (78 FR 74450), we will publicly report the names of those EPs who report the 2014 PQRS Cardiovascular Prevention measures group in support of the Million Hearts Initiative on Physician Compare in 2015 by including a check mark in the quality programs section of the profile page. We propose to also continue to include this information annually in the year following the year it is reported (for example, 2015 data will be included on Physician Compare in 2016). Finally, we will also indicate with a green check mark those individuals who have earned the 2014 PQRS Maintenance of Certification Incentive (Additional Incentive) on the Web site in 2015 (78 FR 74450).

We continue to implement our plan for a phased approach to public reporting performance information on Physician Compare. The first phase of this plan was finalized with the CY 2012 PFS final rule with comment period (76 FR 73419–73420), where we established that PQRS GPRO measures collected through the GPRO web interface for 2012 would be publicly reported on Physician Compare. The plan was expanded with the CY 2013 PFS final rule with comment period (77 FR 69166), where we established that the specific GPRO web interface measures that would be posted on Physician Compare would include the PQRS GPRO measures for Diabetes Mellitus (DM) and Coronary Artery Disease (CAD), and we noted that we would report composite measures for these measure groups in 2014, if technically feasible.[5] The 2012 PQRS GPRO measures were publicly reported on Physician Compare in February 2014. Data reported in 2013 on the GPRO DM and GPRO CAD measures and composites collected via the GPRO web interface that meet the minimum sample size of 20 patients and prove to be statistically valid and reliable will be publicly reported on Physician Compare in late CY 2014, if technically feasible. If the minimum threshold is not met for a particular measure, or the measure is otherwise deemed not to be suitable for public reporting, the group's performance rate on that measure will not be publicly reported. We will only publish on Physician Compare those measures that are statistically valid and reliable and therefore most likely to help consumers make informed decisions about the Medicare professionals they choose to meet their health care needs.

Measures must be based on reliable and valid data elements to be useful to consumers and thus included on Physician Compare. A reliable data element is consistently measuring the same thing regardless of when or where it is collected, while a valid data element is measuring what it is meant to measure. To address the reliability of performance scores, CMS will measure the extent to which differences in each quality measure are due to actual differences in clinician performance versus variation that arises from measurement error. Statistically, reliability depends on performance variation for a measure across clinicians (''signal''), the random variation in performance for a measure within a clinician's panel of attributed beneficiaries (''noise''), and the number of beneficiaries attributed to the clinician. High reliability for a measure suggests that comparisons of relative performance across clinicians are likely to be stable over different performance periods and that the performance of one clinician on the quality measure can confidently be distinguished from another. Potential reliability values range from zero to one, where one (highest possible reliability) means that all variation in the measure's rates is the result of variation in differences in performance, while zero (lowest possible reliability) means that all variation is a result of measurement error. Reliability testing methods included in the CMS Measures Management System Blueprint include test-retest reliability and analysis of variance (ANOVA). Reliability tests endorsed by the NQF include the beta-binomial model test.

The validity of a measure refers to the ability to record or quantify what it claims to measure. To analyze validity, CMS can investigate the extent to which each quality measure is correlated with related, previously validated, measures. CMS can assess both concurrent and predictive validity. Predictive validity is most appropriate for process measures or intermediate outcome measures, in which a cause-and-effect relationship is hypothesized between the measure in question and a validated outcome measure. Therefore, the measure in question is computed first, and the validated measure is computed using data from a later period. To examine concurrent validity, the measure in question and a previously validated

[5] By ''technically feasible'' we mean that there are no operational constraints inhibiting us from moving forward on a given public reporting objective. Operational constraints include delays and/or issues related to data collection which render a set of quality data unavailable in the timeframe necessary for public reporting.

measure are computed using contemporaneous data. In this context, the previously validated measure should measure a health outcome related to the outcome of interest.

In the November 2011 Medicare Shared Savings Program final rule (76 FR 67948), we noted that because Accountable Care Organization (ACO) providers/suppliers that are EPs are considered to be a group practice for purposes of qualifying for a PQRS incentive under the Shared Savings Program, we would publicly report ACO performance on quality measures on Physician Compare in the same way as we report performance on quality measures for PQRS GPRO group practices. Public reporting of performance on these measures is presented at the ACO level only. The first sub-set of ACO measures was also published on the Web site in February 2014. ACO measures can be viewed by following the link for Accountable Care Organization (ACO) Quality Data on the homepage of the Physician Compare Web site (*http://medicare.gov/physiciancompare/aco/search.html*).

As part of our public reporting plan for Physician Compare, in the CY 2013 PFS final rule with comment period (77 FR 69166–69167), we also finalized the decision to publicly report Clinician and Group Consumer Assessment of Healthcare Providers and Systems (CG–CAHPS) data for group practices of 100 or more eligible professionals reporting data in 2013 under the GPRO and for ACOs participating in the Shared Savings Program, if technically feasible. We anticipate posting these data on Physician Compare in late 2014, if available.

We continued to expand our plan for public reporting data on Physician Compare in the CY 2014 PFS final rule with comment period (78 FR 74449). In that final rule we finalized a decision that all measures collected through the GPRO web interface for groups of two or more EPs participating in 2014 under the PQRS GPRO and for ACOs participating in the Medicare Shared Savings Program are available for public reporting in CY 2015. As with all measures we finalized with regard to Physician Compare, these data would include measure performance rates for measures reported that meet the minimum sample size of 20 patients and prove to be statistically valid and reliable. We also finalized a 30-day preview period prior to publication of quality data on Physician Compare. This will allow group practices to view their data as it will appear on Physician Compare before it is publicly reported. We decided that we will detail the process for the 30-day preview and provide a detailed timeline and instructions for preview in advance of the start of the preview period. ACOs will be able to view their quality data that will be publicly reported on Physician Compare through the ACO Quality Reports, which will be made available to ACOs for review at least 30 days prior to the start of public reporting on Physician Compare.

We also finalized a decision to publicly report in CY 2015 on Physician Compare performance on certain measures that group practices report via registries and EHRs in 2014 for the PQRS GPRO (78 FR 74451). Specifically, we finalized making available for public reporting performance on 16 registry measures and 13 EHR measures (78 FR 74451). These measures are consistent with the measures available for public reporting via the web interface. We will indicate the mechanism by which these data were collected and only those data deemed statistically comparable, valid, and reliable would be published on the site.[7]

We also finalized publicly reporting patient experience survey-based measures from the CG–CAHPS measures for groups of 100 or more eligible professionals who participate in PQRS GPRO, regardless of GPRO submission method, and for Shared Savings Program ACOs reporting through the GPRO web interface or other CMS-approved tool or interface (78 FR 74452). For 2014 data, we finalized publicly reporting data for the 12 summary survey measures also finalized for groups of 25 to 99 for PQRS reporting requirements (78 FR 74452). These summary survey measures would be available for public reporting 100 or more EPs participating in PQRS GPRO as well as group practices of 25 to 99 EPs when collected via any certified CAHPS vendor regardless of PQRS participation, as technically feasible. For ACOs participating in the Shared Savings Program, the patient experience measures that are included in the Patient/Caregiver Experience domain of the Quality Performance Standard under the Shared Savings Program (78 FR 74452) are available for public reporting in 2015.

For 2014, we also finalized publicly reporting 2014 PQRS measure data reported by individual EPs in late CY 2015 for individual PQRS quality measures specifically identified in the final rule with comment period, if technically feasible. Specifically, we finalized to make available for public reporting 20 individual measures collected through a registry, EHR, or claims (78 FR 74453 through 74454). These are measures that are in line with those measures reported by groups via the GPRO web interface.

Finally, in support of the HHS-wide Million Hearts Initiative, we finalized a decision to publicly report, no earlier than CY 2015, performance rates on measures in the PQRS Cardiovascular Prevention measures group at the individual EP level for data collected in 2014 for the PQRS (78 FR 74454). See Table 19 for a summary of our final policies for public reporting data on Physician Compare.

TABLE 19—SUMMARY OF PREVIOUSLY FINALIZED POLICIES FOR PUBLIC REPORTING ON PHYSICIAN COMPARE

Data collection year	Public reporting year	Reporting mechanism(s)	Quality measures and data for public reporting
2012	2013	Web Interface (WI), EHR, Registry, Claims.	Include an indicator for satisfactory reporters under PQRS and PQRS GPRO, successful e-prescribers under eRx, and participants in EHR for groups and individuals as applicable.
2012	2014	WI	5 Diabetes Mellitus (DM) and Coronary Artery Disease (CAD) measures collected via the WI for group practices with a minimum sample size of 25 patients and Shared Savings Program ACOs.

TABLE 19—SUMMARY OF PREVIOUSLY FINALIZED POLICIES FOR PUBLIC REPORTING ON PHYSICIAN COMPARE—Continued

Data collection year	Public reporting year	Reporting mechanism(s)	Quality measures and data for public reporting
2013	2014	WI, EHR, Registry, Claims	Include an indicator for satisfactory reporters under PQRS and PQRS GPRO, successful e-prescribers under eRx, and participants in EHR, as well as for EPs who earn a Maintenance of Certification (MOC) Incentive and EPs who report the PQRS Cardiovascular Prevention measures group in support of Million Hearts.
2013	Expected to be December 2014	WI	Up to 6 DM and 2 CAD measures collected via the WI for groups of 25 or more EPs with a minimum sample size of 20 patients. Will include composites for DM and CAD, if feasible.
2013	Expected to be December 2014	WI	5 CG–CAHPS summary measures for groups of 100 or more EPs reporting via the WI and 6 ACO CAHPS summary measures for Shared Savings Program ACOs.
2014	Expected to be 2015	WI, EHR, Registry, Claims	Include an indicator for satisfactory reporters under PQRS and PQRS GPRO, participants in EHR, as well as for EPs who earn a Maintenance of Certification (MOC) Incentive and EPs who report the PQRS Cardiovascular Prevention measures group in support of Million Hearts.
2014	Expected to be late 2015	WI, EHR, Registry	All measures reported via the GPRO WI, 13 EHR, and 16 Registry GPRO measures are also available for group practices of 2 or more EPs and Shared Savings Program ACOs with a minimum sample size of 20 patients. Include composites for DM and CAD, if feasible.
2014	Expected to be late 2015	WI, Certified Survey Vendor	Up to 12 CG–CAHPS summary measures for groups of 100 or more EPs reporting via the WI and group practices of 25 to 99 EPs reporting via a CMS-approved certified survey vendor, as well as 6 ACO CAHPS summary measures for Shared Savings Program ACOs reporting through the GPRO web interface or other CMS-approved tool or interface.
2014	Expected to be late 2015	Registry, EHR, or Claims	A sub-set of 20 PQRS measures submitted by individual EPs that align with those available for group reporting via the WI that are collected through a Registry, EHR, or claims with a minimum sample size of 20 patients.
2014	Expected to be late 2015	Registry, EHR, or Claims	Measures from the Cardiovascular Prevention measures group reported by individual EPs in support of the Million Hearts Initiative with a minimum sample size of 20 patients.

3. Proposals for Public Data Disclosure on Physician Compare in 2015 and 2016

We are continuing the expansion of public reporting on Physician Compare by proposing to make an even broader set of quality measures available for publication on the Web site. We started the phased approach with a small number of possible PQRS GPRO web interface measures for 2012, and have been steadily building on this to provide Medicare consumers with more information to help them make informed health care decisions. As a result, we are now proposing to increase the measures available for public reporting.

We previously finalized in the CY 2014 PFS final rule with comment period (78 FR 74450) to make available for public reporting all PQRS GPRO measures collected in 2014 via the web interface. We now propose to expand public reporting of group-level measures by making all 2015 PQRS GPRO measure sets across group reporting mechanisms—GPRO web interface, registry, and EHR—available for public reporting on Physician Compare in CY 2016 for groups of 2 or more EPs, as appropriate by reporting mechanism.[6] Similarly, all measures reported by Shared Savings Program ACOs would be

[6] Tables Q1–Q27 detail proposed changes to available PQRS measures. Additional information on PQRS measures can be found on the CMS.gov PQRS Web site at *http://www.cms.gov/Medicare/Quality-Initiatives-Patient-Assessment-Instruments/PQRS/index.html.*

available for public reporting on Physician Compare. As with all quality measures proposed for inclusion on Physician Compare, only measures that prove to be valid, reliable, and accurate upon analysis and review at the conclusion of data collection will be included on the Web site. Also, we propose that measures must meet the public reporting criteria of a minimum sample size of 20 patients. We propose to include an indicator of which reporting mechanism was used and only measures deemed statistically comparable would be included on the site.[7] We propose to publicly report all measures submitted and reviewed and found to be statistically valid and reliable in the Physician Compare downloadable file. However, we propose that not all of these measures necessarily would be included on the Physician Compare profile pages. Consumer testing has shown including too much information and/or measures that are not well understood by consumers on these pages can negatively impact a consumer's ability to make informed decisions. Our analysis of the measure data once collected, consumer testing, and stakeholder feedback would determine specifically which measures are published on profile pages on the Web site. Statistical analyses will ensure the measures included are statistically valid and reliable and comparable across data collection mechanisms. And, stakeholder feedback will ensure all measures meet current clinical standards. CMS will continue to reach out to stakeholders in the professional community, such as specialty societies, to ensure that the measures under consideration for public reporting remain clinically relevant and accurate. As measures are finalized significantly in advance of moment they are collected, it is possible that clinical guidelines can change rendering a measure no longer relevant. Publishing that measure can lead to consumer confusion regarding what best practices their health care professional should be subscribing to.

The primary goal of Physician Compare is to help consumers make informed health care decisions. If a consumer does not properly interpret a quality measure and thus misunderstands what the quality score represents, the consumer cannot use this information to make an informed decision. Through concept testing, CMS will test with consumers how well they understand each measure under consideration for public reporting. If a measure is not consistently understood and/or if consumers do not understand the relevance of the measure to their health care decision making process, CMS will not include the measure on the Physician Compare profile page as inclusion will not aid informed decision making. Finally, consumer testing will help ensure the measures included on the profile pages are accurately understood and relevant to consumers, thus helping them make informed decisions. This will be done to ensure that the information included on Physician Compare is consumer friendly and consumer focused.

As is the case for all measures published on Physician Compare, group practices will be given a 30-day preview period to view their measures as they will appear on Physician Compare prior to the measures being published. As in previous years, we will detail the process for the 30-day preview and provide a detailed timeline and instructions for preview in advance of the start of the preview period. ACOs will be able to view their quality data that will be publicly reported on Physician Compare through the ACO Quality Reports, which will be made available to ACOs for review at least 30 days prior to the start of public reporting on Physician Compare.

In addition to making all 2015 PQRS GPRO measures available for public reporting, we seek comment on creating composites using 2015 data and publishing composite scores in 2016 by grouping measures based on the PQRS GPRO measure groups, if technically feasible. We will analyze the data collected in 2015 and conduct psychometric and statistical analyses, looking at how the measures best fit together and how accurately they are measuring the composite concept, to create composites for certain PQRS GPRO measure groups, including but not limited to:

- Care Coordination/Patient Safety (CARE) Measures
- Coronary Artery Disease (CAD) Disease Module
- Diabetes Mellitus (DM) Disease Module
- Preventive (PREV) Care Measures

We would analyze the component measures that make up each of these measure groups to see if a statistically viable composite can be constructed with the data reported for 2015. We have received ample feedback from stakeholders indicating such scores are strongly desired. Composite scores, generally, have also proven to be critical for providing consumers a better way to understand quality measure data as composites provide a more concise, easy to understand picture of physician quality. Therefore, we plan to analyze the data once collected to establish the best possible composite, which would help consumers use these quality data to make informed health care decisions.

Similar to composite scores, benchmarks are also important to ensuring that the quality data published on Physician Compare are accurately interpreted and appropriately understood. A benchmark will allow consumers to more easily evaluate the information published by providing a point of comparison between groups. We continue to receive requests from all stakeholders, but especially consumers, to add this information to Physician Compare. As a result, we propose to publicly report on Physician Compare in 2016 benchmarks for 2015 PQRS GPRO data using the same methodology currently used under the Shared Savings Program. This ACO benchmark methodology was previously finalized in the November 2011 Shared Savings Program final rule (76 FR 67898), as amended in the CY 2014 PFS final rule with comment period (78 FR 74759). Details on this methodology can be found on CMS.gov at *http://cms.gov/Medicare/Medicare-Fee-for-Service-Payment/sharedsavingsprogram/Downloads/MSSP-QM-Benchmarks.pdf*. We propose to follow this methodology using the 2014 PQRS GPRO data, however.

As outlined for the Shared Savings Program, we propose to calculate benchmarks using data at the group practice TIN level for all EPs who have at least 20 cases in the denominator. A benchmark per this methodology is the performance rate a group practice must achieve to earn the corresponding quality points for each measure. Benchmarks would be established for each percentile, starting with the 30th percentile (corresponding to the minimum attainment level) and ending with the 90th percentile (corresponding to the maximum attainment level). A quality scoring points systems would then be determined. Quality scoring would be based on the group practice's actual level of performance on each measure. A group practice would earn quality points on a sliding scale based on level of performance: Performance below the minimum attainment level (the 30th percentile) for a measure would receive zero points for that measure; performance at or above the 90th percentile of the performance

[7] By statistically comparable, CMS means that the quality measures are analyzed and proven to measure the same phenomena in the same way regardless of the mechanism through which they were collected.

benchmark would earn the maximum points available for the measure. The total points earned for measures in each measure group would be summed and divided by the total points available for that measure group to produce an overall measure group score of the percentage of points earned versus points available. The percentage score for each measure group would be averaged together to generate a final overall quality score for each group practice. The goal of including such benchmarks would be to help consumers see how each group practice performs on each measure, measure group, and overall in relation to other group practices.

Understanding the value consumers place on patient experience data and the commitment to reporting these data on Physician Compare, we propose publicly reporting in CY 2016 patient experience data from 2015 for all group practices of 2 or more EPs, who meet the specified sample size requirements and collect data via a CMS-specified certified CAHPS vendor. The patient experience data available are specifically the CAHPS for PQRS and CAHPS for ACO measures, which include the CG–CAHPS core measures. For group practices, we propose to publicly report for 2015 data on Physician Compare in 2016 the 12 summary survey measures previously finalized for 2014 data:

- Getting Timely Care, Appointments, and Information
- How Well Providers Communicate
- Patient's Rating of Provider
- Access to Specialists
- Health Promotion & Education
- Shared Decision Making
- Health Status/Functional Status
- Courteous and Helpful Office Staff
- Care Coordination
- Between Visit Communication
- Helping You to Take Medication as Directed
- Stewardship of Patient Resources

We propose that these 12 summary survey measures would be available for public reporting for all group practices. For ACOs participating in the Shared Savings Program, we propose that the patient experience measures that are included in the Patient/Caregiver Experience domain of the Quality Performance Standard under the Shared Savings Program in 2015 would be available for public reporting in 2016. We would review all quality measures after they are collected to ensure that only those measures deemed valid and reliable are included on the Web site.

We previously finalized in the 2014 PFS final rule with comment period (78 FR 74454) that 20 2014 PQRS measures for individual EPs collected via registry, EHR, or claims would be available for public reporting in late 2015, if technically feasible. We propose to expand on this in two ways. First, we propose to publicly report these same 20 measures for 2013 PQRS data in early 2015. Publicly reporting these 2013 individual measures will help ensure individual level measures are made available as soon as possible. Consumers are looking for measures about individual doctors and other health care professionals, and this would make these quality data available to the public sooner.

Second, we propose to make all individual EP-level PQRS measures collected via registry, EHR, or claims available for public reporting on Physician Compare for data collected in 2015 to be publicly reported in late CY 2016, if technically feasible.[8] This will provide the opportunity for more EPs to have measures included on Physician Compare, and it will provide more information to consumers to make informed decisions about their health care. As with group-level measures, we propose to publicly report all measures submitted and reviewed and deemed valid and reliable in the Physician Compare downloadable file. However, not all of these measures necessarily would be included on the Physician Compare profile pages. Our analysis of the measure data once collected, consumer testing, and stakeholder feedback would determine specifically which measures are published on profile pages on the Web site. In this way, quality information at the individual practitioner level would be available, as has been regularly requested by Medicare consumers, but consumers will not be overwhelmed with too much information on each EPs profile page.

As noted above for group-level reporting, composite scores and benchmarks are critical in helping consumers best understand the quality measure information presented. For that reason, in addition to making all 2015 PQRS measures available for public reporting, we seek comment to create composites and publish composite scores by grouping measures based on the PQRS measure groups, if technically feasible. We will analyze the data collected in 2015 and conduct psychometric and statistical analyses to create composites for PQRS measure groups to be published in 2016, including:

- Coronary Artery Disease (CAD) (see Table 30)
- Diabetes Mellitus (DM) (see Table 32)
- General Surgery (see Table 33)
- Oncology (see Table 38)
- Preventive Care (see Table 41)
- Rheumatoid Arthritis (RA) (see Table 42)
- Total Knee Replacement (TKR) (see Table 45)

We would analyze the component measures that make up each of these measure groups to see if a statistically viable composite can be constructed with the data reported for 2015. In addition, we propose to use the same methodology outlined above for group practices to develop benchmarks for individual practitioners. As noted for group practices, we believe that providing composite scores and benchmarks will give consumers the tools needed to most accurately interpret the quality data published on Physician Compare.

Previously, we indicated an interest in including specialty society measures on Physician Compare. We now seek comment on posting these measures on the Web site. We also seek comment on the option of linking from Physician Compare to specialty society Web sites that publish non-PQRS measures. Including specialty society measures on the site or linking to specific specialty society measures would provide the opportunity for more eligible professionals to have measures included on Physician Compare and thus help Medicare consumers make more informed choices. The quality measures developed by specialty societies that would be considered for future posting on Physician Compare are those that have been comprehensively vetted and tested, and are trusted by the physician community. These measures would provide access to available specialty specific quality measures that are often highly regarded and trusted by the stakeholder community and, most importantly, by the specialties they represent. We are working to identify possible societies to reach out to, and seek comment on the concept, as well as potential specific society measures of interest.

Finally, we propose to make available on Physician Compare, 2015 Qualified Clinical Data Registry (QCDR) measure data collected at the individual level or aggregated to a higher level of the QCDR's choosing—such as the group practice level, if technically feasible. QCDRs are able to collect both PQRS

[8] Tables Q1–Q27 detail proposed changes to available PQRS measures. Additional information on PQRS measures can be found on the CMS.gov PQRS Web site at *http://www.cms.gov/Medicare/Quality-Initiatives-Patient-Assessment-Instruments/PQRS/index.html.*

measures and non-PQRS measures.[9] We believe that making QCDR data available on Physician Compare further supports the expansion of quality measure data available for EPs and group practices regardless of specialty therefore providing more quality data to consumers to help them make informed decisions. The QCDR would be required to declare during their self-nomination if they plan to post data on their own Web site and allow Physician Compare to link to it or if they will provide data to us for public reporting on Physician Compare. We propose that measures collected via QCDRs must also meet the established public reporting criteria, including a 20 patient minimum sample size. As with PQRS data, we propose to publicly report all measures submitted and reviewed and deemed valid and reliable in the Physician Compare downloadable file. However, not all of these measures necessarily would be included on the Physician Compare profile pages. Our analysis of the measure data once collected, consumer testing, and stakeholder feedback would determine specifically which measures are published on profile pages on the Web site.

Table 20 summarizes the Physician Compare proposals detailed in this section. We solicit comments on all proposals. Increasing the measures available for public reporting on Physician Compare at both the individual and group level will help accomplish the Web site's twofold purpose:

- Provide more information for consumers to encourage informed patient choice.
- Create explicit incentives for physicians to maximize performance.

TABLE 20—SUMMARY OF PROPOSED DATA FOR PUBLIC REPORTING

Data collection year	Publication year	Data type	Reporting mechanism	Proposed quality measures and data for public reporting
2013	2015	PQRS	Registry, EHR, or Claims	Twenty 2013 PQRS individual measures collected through a Registry, EHR, or claims mirroring the measures finalized for 2014 (78 FR 74454).
2015	2016	Multiple	Web Interface, EHR, Registry, Claims.	Include an indicator for satisfactory reporters under PQRS and PQRS GPRO, participants in EHR, and EPs who report the PQRS Cardiovascular Prevention measures group in support of Million Hearts.
2015	2016	PQRS GPRO & ACO GPRO.	Web Interface, EHR, & Registry.	All 2015 PQRS GPRO measures reported via the Web Interface, EHR, and Registry are available for public reporting for group practices of 2 or more EPs and all measures reported by ACOs with a minimum sample size of 20 patients.
2015	2016	CAHPS for PQRS & CAHPS for ACOs.	CMS-Specified Certified CAHPS Vendor.	2015 CAHPS for PQRS for groups of 2 or more EPs and CAHPS for ACOs for those who meet the specified sample size requirements and collect data via a CMS-specified certified CAHPS vendor.
2015	2016	PQRS	Registry, EHR, or Claims	All 2015 PQRS measures for individual EPs collected through a Registry, EHR, or claims.
2015	2016	QCDR data	QCDR	All 2015 QCDR data available for public report on Physician Compare at the individual level or aggregated to a higher level of the QCDR's choosing.

K. Physician Payment, Efficiency, and Quality Improvements—Physician Quality Reporting System

This section contains the proposed requirements for the Physician Quality Reporting System (PQRS). The PQRS, as set forth in sections 1848(a), (k), and (m) of the Act, is a quality reporting program that provides incentive payments (ending with 2014) and payment adjustments (beginning in 2015) to eligible professionals and group practices based on whether they satisfactorily report data on quality measures for covered professional services furnished during a specified reporting period or to individual eligible professionals that satisfactorily participate in a qualified clinical data registry (QCDR).

The proposed requirements will primarily focus on our proposals related to the 2017 PQRS payment adjustment, which will be based on an eligible professional's or a group practice's reporting of quality measures data during the 12-month calendar year reporting period occurring in 2015 (that is, January 1 through December 31, 2015). Please note that, in developing these proposals, we focused on aligning our requirements with other quality reporting programs, such as the Medicare EHR Incentive Program for Eligible Professionals, the Physician Value-Based Payment Modifier (VM), and the Medicare Shared Savings Program, where and to the extent appropriate and feasible. In previous years, we have made various strides in our ongoing efforts to align the reporting requirements in CMS' various quality reporting programs to reduce burden on the eligible professionals and group practices that participate in these programs. Particularly through the QCDR option, we are exploring opportunities to align with quality reporting programs that exist outside of CMS where and to the extent appropriate and feasible. We continued to focus on alignment as we developed our proposals for the 2017 PQRS payment adjustment below.

The PQRS regulation is located at 42 CFR 414.90. The program requirements for the 2007 through 2014 PQRS incentives and the 2015 and 2016 PQRS payment adjustment that were previously established, as well as

[9] *http://www.cms.gov/apps/ama/license.asp?file=/PQRS/downloads/2014_PQRS_IndClaimsRegistry_MeasureSpecs_SupportingDocs_12132013.zip.*

information on the PQRS, including related laws and established requirements, are available at *http://www.cms.gov/Medicare/Quality-Initiatives-Patient-Assessment-Instruments/PQRS/index.html.* In addition, the 2012 PQRS and eRx Experience Report, which provides information about eligible professional participation in PQRS, is available for download at *http://www.cms.gov/Medicare/Quality-Initiatives-Patient-Assessment-Instruments/PQRS/Downloads/2012-PQRS-and-eRx-Experience-Report.zip.*

We note that eligible professionals in critical access hospitals (CAHs) were previously not able to participate in the PQRS. Due to a change we made in the manner in which eligible professionals in CAHs are reimbursed by Medicare, it is now feasible for eligible professionals in CAHs to participate in the PQRS. Although eligible professionals in CAHs are not able to use the claims-based reporting mechanism to report PQRS quality measures data in 2014, beginning in 2015, these eligible professionals in CAHs may participate in the PQRS using ALL reporting mechanisms available, including the claims-based reporting mechanism. Finally, please note that in accordance with section 1848(a)(8) of the Act, all eligible professionals who do not meet the criteria for satisfactory reporting or satisfactory participation for the 2017 PQRS payment adjustment will be subject to the 2017 PQRS payment adjustment with no exceptions.

In addition, in the CY 2013 PFS final rule with comment period, we introduced the reporting of the Agency for Healthcare Research and Quality's (AHRQ's) Clinician & Group (CG) Consumer Assessment of Healthcare Providers and Systems (CAHPS) survey measures, referenced at *https://cahps.ahrq.gov/Surveys-Guidance/CG/index.html.* AHRQ's CAHPS Clinician & Group Survey Version 2.0 (CG–CAHPS) includes 34 core CG–CAHPS survey questions. In addition to these 34 core questions, the CAHPS survey measures that are used in the PQRS include supplemental questions from CAHPS Patient-Centered Medical Home Survey, Core CAHPS Health Plan Survey Version 5.0, other CAHPS supplemental items, and some additional questions. Since the CAHPS survey used in the PQRS covers more than just the 34 core CG–CAHPS survey measures, we will refer to the CG–CAHPS survey measures used in the PQRS as ''CAHPS for PQRS.'' We propose to make this revision throughout § 414.90.

1. Requirements for the PQRS Reporting Mechanisms

The PQRS includes the following reporting mechanisms: Claims; qualified registry; EHR (including direct EHR products and EHR data submission vendor products); the Group Practice Reporting Option (GPRO) web interface; certified survey vendors, for CG–CAHPS survey measures; and the QCDR. Under the existing PQRS regulation, § 414.90(h) through (k) govern which reporting mechanisms are available for use by individuals and group practices for the PQRS incentive and payment adjustment. This section III.K.1 contains our proposals to change the qualified registry, direct EHR and EHR data submission vendor products, QCDR, and GPRO web interface reporting mechanisms. Please note that we are not proposing to make changes to the claims-based reporting mechanism.

a. Proposed Changes to the Requirements for the Qualified Registry

In the CY 2013 and 2014 PFS final rules with comment period, we established certain requirements for entities to become qualified registries for the purpose of verifying that a qualified registry is prepared to submit data on PQRS quality measures for the reporting period in which the qualified registry seeks to be qualified (77 FR 69179 through 69180 and 78 FR 74456). Specifically, in the CY 2014 PFS final rule with comment period, in accordance with the satisfactory reporting criterion we finalized for individual eligible professionals or group practices reporting PQRS quality measures via qualified registry, we finalized the following requirement that a qualified registry must be able to collect all needed data elements and transmit to CMS the data at the TIN/NPI level for at least 9 measures covering at least 3 of the National Quality Strategy (NQS) domains (78 FR 74456).

As we explain in further detail in this section III.K, we are proposing that—in addition to proposing to require that an eligible professional or group practice report on at least 9 measures covering 3 NQS domains—an eligible professional or group practice who sees at least 1 Medicare patient in a face-to-face encounter, as we propose to define that term in section III.K.2.a., and wishes to meet the proposed criterion for satisfactory reporting of PQRS quality measures via a qualified registry for the 2017 PQRS payment adjustment would be required to report on at least 2 cross-cutting PQRS measures specified in Table 21. In accordance with this proposal, we are proposing to require that, in addition to being required to be able to collect all needed data elements and transmit to CMS the data at the TIN/NPI level for at least 9 measures covering at least 3 of the NQS domains for which a qualified registry transmits data, a qualified registry would be required to be able to collect all needed data elements and transmit to CMS the data at the TIN/NPI level for ALL cross-cutting measures specified in Table 21 for which the registry's participating eligible professionals are able to report. We are proposing to require that qualified registries be able to report on all cross-cutting measures specified in Table 21 for which the registry's participating eligible professionals are able to report, rather than proposing to require a minimum of 2, so that eligible professionals and group practices using qualified registries to report PQRS measures would have the flexibility in choosing which cross-cutting measures to report, and to report on as many cross-cutting measures specified in Table 21 as they are able.

Furthermore, in the CY 2013 PFS final rule, we noted that qualified registries have until the last Friday of February following the applicable reporting period (for example, February 28, 2014, for reporting periods ending in 2013) to submit quality measures data on behalf of its eligible professionals (77 FR 69182). We continue to receive stakeholder feedback, particularly from qualified registries currently participating in the PQRS, urging us to extend this submission deadline due to the time it takes for these qualified registries to collect and analyze the quality measures data received after the end of the reporting period. While, at the time, we emphasized the need to have quality measures data received by CMS no later than the last Friday of the February occurring after the end of the applicable reporting period, we believe it is now feasible to extend this deadline. Therefore, we propose to extend the deadline for qualified registries to submit quality measures data, including, but not limited to, calculations and results, to March 31 following the end of the applicable reporting period (for example, March 31, 2016, for reporting periods ending in 2015).

In addition, we seek comment on whether to propose in future rulemaking to allow more frequent submissions of data, such as quarterly or year-round submissions, rather than having only one opportunity to submit quality measures data as is our current process.

We invite public comment on these proposals.

b. Proposed Changes to the Requirements for the Direct EHR and EHR Data Submission Vendor Products That Are CEHRT

In the CY 2013 PFS final rule with comment period, we finalized requirements that although EHR vendors and their products would no longer be required to undergo the previously existing qualification process, we would only accept the data if the data are: (1) Transmitted in a CMS-approved XML format utilizing a Clinical Document Architecture (CDA) standard such as Quality Reporting Data Architecture (QRDA) level 1 (and for EHR data submission vendor products that intend to report for purposes of the proposed PQRS-Medicare EHR Incentive Program Pilot, if the aggregate data are transmitted in a CMS-approved XML format); and (2) in compliance with a CMS-specified secure method for data submission (77 FR 69183 through 69187). To further clarify, EHR vendors and their products must be able to submit data in the form and manner specified by CMS. Accordingly, direct EHRs and EHR data submission vendors must comply with CMS Implementation Guides for both the QRDA–I and QRDA–III data file formats. The Implementation Guides for 2014 are available at *http://www.cms.gov/Regulations-and-Guidance/Legislation/EHRIncentivePrograms/Downloads/Guide_QRDA_2014eCQM.pdf.* Updated guides for 2015, when available, will be posted on the CMS EHR Incentive Program Web site at *http://www.cms.gov/Regulations-and-Guidance/Legislation/EHRIncentivePrograms.* These implementation guides further describe the technical requirements for data submission to ensure the data elements required for measure calculation and verification are provided. We propose to continue applying these requirements to direct EHR products and EHR data submission vendor products for 2015 and beyond. For 2015 and beyond, we also propose to have the eligible professional or group practice provide the CMS EHR Certification Number of the product used by the eligible professional or group practice for direct EHRs and EHR data submission vendors.

We believe this requirement is necessary to ensure that the eligible professionals and group practices that are using EHR technology are using a product that is certified EHR technology (CEHRT) and will allow CMS to ensure that the eligible professional or group practice's data is derived from a product that is CEHRT.

Additionally, we seek comment on whether to propose in future rulemaking to allow more frequent submissions of data, such as quarterly or year-round submissions, rather than having only one opportunity to submit quality measures data as is our current process.

We invite public comment on these proposals.

c. Proposed Changes to the Requirements for the QCDR

In the CY 2014 PFS final rule with comment period, we established certain requirements for entities to become QCDRs for the purpose of having their participating eligible professionals meet the criteria for satisfactory participation in a QCDR for purposes of the PQRS incentives and payment adjustments (78 FR 74465 through 74474).

Specifically, in accordance with the final criterion that required eligible professionals to report on at least 1 outcome measure, we required that an entity possess at least 1 outcome measure for which its participating eligible professionals may report (78 FR 74470). As we explain in further detail in section III.K. of this proposed rule, we are proposing that an eligible professional wishing to meet the proposed criterion for satisfactory participation in a QCDR for the 2017 PQRS payment adjustment report on at least 3 outcome measures (or if less than 3 outcome measures are available for reporting, report on at least 2 outcome measures and at least 1 of the following types of measures: resource use; patient experience of care; or efficiency/appropriate use). Accordingly, we are proposing to amend the requirement for the 2017 PQRS payment adjustment to require a QCDR to possess at least 3 outcome measures (or, in lieu of 3 outcome measures, at least 2 outcome measures and at least 1 of the following other types of measures—resource use, patient experience of care, or efficiency/appropriate use).

To establish the minimum number of measures (9 measures covering at least 3 NQS domains) a QCDR may report for the PQRS, we placed a limit on the number of non-PQRS measures (20) that a QCDR may submit on behalf of an eligible professional at this time (78 FR 74476). Although we believe such a limit is still necessary because the QCDR option is still new and we are still gaining familiarity with the measures available for reporting under the QCDRs, we believe it is appropriate to increase the number of non-PQRS that may be reported by QCDRs. We have received comments from entities currently undergoing the QCDR qualification process who wish to submit data on additional measures and we believe that accepting additional quality measures data is important, as it provides a better and more complete picture of the quality of care provided by eligible professionals. Therefore, we are proposing to change this limit from 20 measures to 30. In other words, beginning with the criteria for satisfactory participation for the 2017 PQRS payment adjustment, a QCDR may submit quality measures data for a maximum of 30 non-PQRS measures. Please note that this proposed limit does not apply to measures contained in the PQRS measure set, as QCDRs can report on as many measures in the PQRS measure set as they wish.

Additionally, CMS' experience during the 2014 self-nomination process shed light on clarifications needed on what is considered a non-PQRS measure. Therefore, to clarify the definition of non-PQRS measures, we propose the following parameters for a measure to be considered a non-PQRS measure:

- A measure that is not contained in the PQRS measure set for the applicable reporting period.
- A measure that may be in the PQRS measure set but has substantive differences in the manner it is reported by the QCDR. For example, PQRS measure 319 is reportable only via the GPRO web interface. A QCDR wishes to report this measure on behalf of its eligible professionals. However, as CMS has only extracted the data collected from this quality measure using the GPRO web interface, in which CMS utilizes a claims-based assignment and sampling methodology to inform the groups on which patients they are to report, the reporting of this measure would require changes to the way that the measure is calculated and reported to CMS via a QCDR instead of through the GPRO web interface. Therefore, due to the substantive changes needed to report this measure via a QCDR, PQRS measure 319 would be considered a non-PQRS measure. In addition, CAHPS for PQRS is currently reportable only via a CMS-certified survey vendor. However, although CAHPS for PQRS is technically contained in the PQRS measure set, we consider the changes that will need to be made to be available for reporting by individual eligible professionals (and not as a part of a group practice) significant enough as to treat CAHPS for PQRS as a non-PQRS measure for purposes of reporting CAHPS for PQRS via a QCDR.

Furthermore, under our authority to establish the requirements for an entity to be considered a QCDR under section 1848(m)(3)(E)(i) of the Act, we established certain requirements for an

entity to be considered a QCDR in the CY 2014 PFS final rule with comment period (78 FR 74467 through 74473). Under this same authority, we are proposing here to add the following requirement that an entity must meet to serve as a QCDR under the PQRS for reporting periods beginning in 2015:

• Require that the entity make available to the public the quality measures data for which its eligible professionals report.

In the CY 2014 PFS proposed rule, we proposed that, to be considered a QCDR, an entity would be required to demonstrate that it has a plan to publicly report its quality data through a mechanism where the public and registry participants can view data about individual eligible professionals, as well as view regional and national benchmarks (78 FR 43363). Due to stakeholder feedback against this proposal, as well as comments requesting more details surrounding this proposal, we did not finalize this proposed requirement in the CY 2014 PFS final rule with comment period. However, we noted that we would revisit this proposal in future years (78 FR 74471). Because of our ongoing interest in providing transparency to the public for quality measures data that is reported under the PQRS, we again propose the requirement that an entity make available to the public the quality measures data for which its eligible professionals report. To clarify this proposal, we propose that, at a minimum, the QCDR publicly report the following quality measures data information that we believe will give patients adequate information on the care provided by an eligible professional:

• The title and description of the measures that a QCDR reports for purposes of the PQRS, as well as the performance results for each measure the QCDR reports.

With respect to when the quality measures data must be publicly reported, we propose that the QCDR must have the quality measures data by April 31 of the year following the applicable reporting period (that is, April 31, 2016, for reporting periods occurring in 2015). The proposed deadline of April 31 will provide QCDRs with one month to post quality measures data and information following the March 31 deadline for the QCDRs to transmit quality measures data for purposes of the PQRS payment adjustments. We also propose that this data be available on a continuous basis and be continuously updated as the measures undergo changes in measure title and description, as well as when new performance results are calculated.

Please note that, in making this proposal, we defer to the entity in terms of the method it will use to publicly report the quality measures data it collects for the PQRS. For example, to meet this proposed requirement, it would be sufficient for a QCDR to publicly report performance rates of eligible professionals through means such as, but not excluding, board or specialty Web sites, performance or feedback reports, or listserv dashboards or announcements. We also note that a QCDR would meet this public reporting requirement if the QCDR's measures data were posted on Physician Compare. In addition, we defer to the QCDR to determine whether to report performance results at the individual eligible professional level or aggregate the results for certain sets of eligible professionals who are in the same practice together (but we are not registered as a group practice for the purposes of PQRS reporting). We believe it is appropriate to allow a QCDR to publicly report performance results at an aggregate level for certain eligible professionals when those who are in the same practice contribute to the overall care provided to a patient.

Based on CMS experience with the qualifying entities wishing to become QCDRs for reporting periods occurring in 2014, we received feedback from many organizations who expressed concern that the entity wishing to become a QCDR may not meet the requirements of a QCDR solely on its own. Therefore, we provide the following proposals beginning in 2015 on situations where an entity may not meet the requirements of a QCDR solely on its own but, in conjunction with another entity, may be able to meet the requirements of a QCDR and therefore be eligible for qualification:

• We propose to allow that an entity that uses an external organization for purposes of data collection, calculation or transmission may meet the definition of a QCDR so long as the entity has a signed, written agreement that specifically details the relationship and responsibilities of the entity with the external organizations effective as of January 1 the year prior to the year for which the entity seeks to become a QCDR (for example, January 1, 2014, to be eligible to participate for purposes of data collected in 2015). We are adding this proposal because we received questions from entities wishing to become QCDRs who are engaged in quality improvement activities but use an external organization for purposes of quality measures data collection, calculation, and transmission. We believe that it may be appropriate to classify the entity as a QCDR so long as the entity meets the definition of a QCDR by the date for which we require that a QCDR must be in existence (that is, January 1 the year prior to the year for which the entity seeks to become a QCDR (78 FR 74467)). Entities that have a mere verbal, non-written agreement to work together to become a QCDR by January 1 the year prior to the year for which the entity seeks to become a QCDR would not fulfill this proposed requirement.

• In addition, we propose that an entity that has broken off from a larger organization may be considered to be in existence for the purposes of QCDR qualification as of the earliest date the larger organization begins continual existence. We received questions from entities who used to be part of a larger organization but have recently become independent from the larger organization as to whether the entities would meet the requirement established in the CY 2014 PFS final rule with comment period that the entity be in existence as of January 1 the year prior to the year for which the entity seeks to become a QCDR (78 FR 74467). For example, a registry that was previously a part of a larger medical society as of January 1, 2013, could have broken off from the medical society and become an independent registry in 2014. Likewise, a member of a medical society could create a registry separate from the medical society. As such, there would be concern as to whether that entity would meet the requirement of being in existence prior to January 1, 2013, to be considered for qualification for reporting periods occurring in 2014. In these examples, for purposes of meeting the requirement that the entity be in existence as of January 1 the year prior to the year for which the entity seeks to become a QCDR, we may consider this entity as being in existence as of the date the larger medical society was in existence.

In the CY 2014 PFS final rule with comment period, in accordance with the submission deadline of quality measures data for qualified registries, we noted a deadline of the last Friday in February occurring after the end of the applicable reporting period to submit quality measures data to CMS (78 FR 74471). In accordance with our proposal to extend this deadline for qualified registries, we propose to extend the deadline for QCDRs to submit quality measures data calculations and results by March 31 following the end of the applicable reporting period (that is, March 31,

2016, for reporting periods occurring in 2015).

Additionally, we seek comment on whether to propose in future rulemaking to allow more frequent submissions of data, such as quarterly or year-round submissions, rather than having only one opportunity to submit quality measures data as is our current process.

We seek public comment on these proposed changes to the requirements for the QCDR.

d. Proposed Changes to the GPRO Web Interface

In the CY 2014 PFS final rule with comment period (78 FR 74456), we finalized our proposal to require ''that group practices register to participate in the GPRO by September 30 of the year in which the reporting period occurs (that is September 30, 2014 for reporting periods occurring in 2014), as proposed.'' However, we noted that, in order ''to respond to the commenters concerns to provide timelier feedback on performance on CG CAHPS in the future, we anticipate proposing an earlier deadline for group practices to register to participate in the GPRO in future years'' (78 FR 74456). Indeed, to provide timelier feedback on performance on CAHPS for PQRS, we propose to modify the deadline that a group practice must register to participate in the GPRO to June 30 of the year in which the reporting period occurs (that is, June 30, 2015, for reporting periods occurring in 2015). Although this proposed GPRO registration deadline would provide less time for a group practice to decide whether to participate in the GPRO, we believe the benefit of providing timelier feedback reports outweighs this concern.

Furthermore, we seek comment on whether to allow more frequent submissions of data, such as quarterly or year-round submissions, rather than having only one opportunity to submit quality measures data as is our current process.

We seek public comment on these proposals.

2. Proposed Criteria for the Satisfactory Reporting for Individual Eligible Professionals for the 2017 PQRS Payment Adjustment

Section 1848(a)(8) of the Act, as added by section 3002(b) of the Affordable Care Act, provides that for covered professional services furnished by an eligible professional during 2015 or any subsequent year, if the eligible professional does not satisfactorily report data on quality measures for covered professional services for the quality reporting period for the year, the fee schedule amount for services furnished by such professional during the year (including the fee schedule amount for purposes of determining a payment based on such amount) shall be equal to the applicable percent of the fee schedule amount that would otherwise apply to such services. For 2016 and subsequent years, the applicable percent is 98.0 percent.

a. Proposed Criterion for the Satisfactory Reporting of Individual Quality Measures via Claims and Registry for Individual Eligible Professionals for the 2017 PQRS Payment Adjustment

In the CY 2014 PFS final rule with comment period (see Table 47 at 78 FR 74479), we finalized the following criteria for satisfactory reporting for the submission of individual quality measures via claims and registry for the 2014 PQRS incentive: For the 12-month reporting period for the 2014 PQRS incentive, the eligible professional would report at least 9 measures, covering at least 3 of the NQS domains, OR, if less than 9 measures apply to the eligible professional, report 1–8 measures, AND report each measure for at least 50 percent of the Medicare Part B FFS patients seen during the reporting period to which the measure applies. Measures with a 0 percent performance rate would not be counted. For an eligible professional who reports fewer than 9 measures covering less than 3 NQS domains via the claims- or registry-based reporting mechanism, the eligible professional would be subject to the measure application validity (MAV) process, which would allow us to determine whether the eligible professional should have reported quality data codes for additional measures.

To be consistent with the satisfactory reporting criterion we finalized for the 2014 PQRS incentive, we are proposing to modify § 414.90(j) and propose the following criterion for individual eligible professionals reporting via claims and registry: For the 12-month reporting period for the 2017 PQRS payment adjustment, the eligible professional would report at least 9 measures, covering at least 3 of the NQS domains AND report each measure for at least 50 percent of the eligible professional's Medicare Part B FFS patients seen during the reporting period to which the measure applies. Of the measures reported, if the eligible professional sees at least 1 Medicare patient in a face-to-face encounter, as we propose to define that term below, the eligible professional would report on at least 2 measures contained in the proposed cross-cutting measure set specified in Table 21. If less than 9 measures apply to the eligible professional, the eligible professional would report up to 8 measure(s), AND report each measure for at least 50 percent of the Medicare Part B FFS patients seen during the reporting period to which the measure applies. Measures with a 0 percent performance rate would not be counted.

We note that, unlike the criterion we finalized for the 2014 PQRS incentive, we are proposing to require an eligible professional who sees at least 1 Medicare patient in a face-to-face encounter, as we propose to define that term below, during the 12-month 2017 PQRS payment adjustment reporting period to report at least 2 measures contained in the proposed cross-cutting measure set specified in Table 21. As we noted in the CY 2014 PFS proposed rule (78 FR 43359), we are dedicated to collecting data that provides us with a better picture of the overall quality of care furnished by eligible professionals, particularly for the purpose of having PQRS reporting being used to assess quality performance under the VM. We believe that requiring an eligible professional to report on at least 2 broadly applicable, cross-cutting measures will provide us with quality data on more varied aspects of an eligible professional's practice. We also note that in its 2014 pre-rulemaking final report (available at *http://www.qualityforum.org/Publications/2014/01/MAP_Pre-Rulemaking_Report__2014_Recommendations_on_Measures_for_More_than_20_Federal_Programs.aspx*), the Measure Applications Partnership (MAP) encouraged the development of a core measure set (see page 16 of the ''MAP Pre-Rulemaking Report: 2014 Recommendations on Measures for More than 20 Federal Programs''). The MAP stated ''a core [measure set] would address critical improvement gaps, align payment incentives across clinician types, and reduce reporting burden.''

For what defines a ''face-to-face'' encounter, for purposes of proposing to require reporting of at least 2 cross-cutting measures specified in Table 21, we propose to determine whether an eligible professional had a ''face-to-face'' encounter by seeing whether the eligible professional billed for services under the PFS that are associated with face-to-face encounters, such as whether an eligible professional billed general office visit codes, outpatient visits, and surgical procedures. We would not include telehealth visits as face-to-face encounters for purposes of the proposals

require reporting of at least 2 cross-cutting measures specified in Table 21.

In addition, we understand that there may be instances where an eligible professional may not have at least 9 measures applicable to an eligible professional's practice. In this instance, like the criterion we finalized for the 2014 PQRS incentive (see Table 47 at 78 FR 74479), an eligible professional reporting on less than 9 measures would still be able to meet the satisfactory reporting criterion via claims and registry if the eligible professional reports on 1–8 measures, as applicable, to the eligible professional's practice. If an eligible professional reports on 1–8 measures, the eligible professional would be subject to the MAV process, which would allow us to determine whether an eligible professional should have reported quality data codes for additional measures. In addition, the MAV will also allow us to determine whether a group practice should have reported on any of the proposed cross-cutting measures specified in Table 21. The MAV process we are proposing to implement for claims and registry is the same process that was established for reporting periods occurring in 2014 for the 2014 PQRS incentive. For more information on the claims MAV process, please visit *http://www.cms.gov/Medicare/Quality-Initiatives-Patient-Assessment-Instruments/PQRS/Downloads/2014_PQRS_Claims_MeasureApplicabilityValidation_12132013.zip*. For more information on the registry MAV process, please visit *http://www.cms.gov/Medicare/Quality-Initiatives-Patient-Assessment-Instruments/PQRS/Downloads/2014_PQRS_Registry_MeasureApplicabilityValidation_12132013.zip*.

We seek public comment on our proposed satisfactory reporting criterion for individual eligible professionals reporting via claims or registry for the 2017 PQRS payment adjustment.

b. Proposed Criterion for Satisfactory Reporting of Individual Quality Measures via EHR for Individual Eligible Professionals for the 2017 PQRS Payment Adjustment

In the CY 2013 PFS final rule with comment period, we finalized the following criterion for the satisfactory reporting for individual eligible professionals reporting individual measures via a direct EHR that is CEHRT or an EHR data submission vendor that is CEHRT for the 2014 PQRS incentive: Report 9 measures covering at least 3 of the NQS domains. If an eligible professional's CEHRT does not contain patient data for at least 9 measures covering at least 3 domains, then the eligible professional must report all of the measures for which there is Medicare patient data. An eligible professional must report on at least 1 measure for which there is Medicare patient data (see Table 47 at 78 FR 74479).

To be consistent with the criterion we finalized for the 2014 PQRS incentive, as well as to continue to align with the final criterion for meeting the clinical quality measure (CQM) component of achieving meaningful use under the Medicare EHR Incentive Program, we are proposing to modify § 414.90(j) and propose the following criterion for the satisfactory reporting for individual eligible professionals to report individual measures via a direct EHR that is CEHRT or an EHR data submission vendor that is CEHRT for the 2017 PQRS payment adjustment: The eligible professional would report 9 measures covering at least 3 of the NQS domains. If an eligible professional's CEHRT does not contain patient data for at least 9 measures covering at least 3 domains, then the eligible professional would be required to report all of the measures for which there is Medicare patient data. An eligible professional would be required to report on at least 1 measure for which there is Medicare patient data.

We seek public comment on this proposal.

c. Proposed Criterion for Satisfactory Reporting of Measures Groups via Registry for Individual Eligible Professionals for the 2017 PQRS Payment Adjustment

In the CY 2013 PFS final rule with comment period, we finalized the following criterion for the satisfactory reporting for individual eligible professionals to report measures groups via registry for the 2014 PQRS incentive: For the 12-month reporting period for the 2014 PQRS incentive, report at least 1 measures group AND report each measures group for at least 20 patients, the majority (11 patients) of which must be Medicare Part B FFS patients. Measures groups containing a measure with a 0 percent performance rate will not be counted (see Table 47 at 78 FR 74479).

To be consistent with the criterion we finalized for the 2014 PQRS incentive, we are proposing to modify § 414.90(j) to indicate the following criterion for the satisfactory reporting for individual eligible professionals to report measures groups via registry for the 2017 PQRS payment adjustment: For the 12-month reporting period for the 2017 PQRS payment adjustment, the eligible professional would report at least 1 measures group AND report each measures group for at least 20 patients, the majority (11 patients) of which would be required to be Medicare Part B FFS patients. Measures groups containing a measure with a 0 percent performance rate would not be counted.

Although we are proposing satisfactory reporting criterion for individual eligible professionals to report measures groups via registry for the 2017 PQRS payment adjustment that is consistent with criterion finalized for the 2014 PQRS incentive, please note, however, in this section III.K of this proposed rule, we are proposing to change the definition of a PQRS measures group.

We seek public comment on our proposed satisfactory reporting criterion for individual eligible professionals reporting measures groups via registry for the 2017 PQRS payment adjustment.

3. Satisfactory Participation in a QCDR by Individual Eligible Professionals

Section 601(b) of the ATRA amended section 1848(m)(3) of the Act, by redesignating subparagraph (D) as subparagraph (F) and adding new subparagraphs (D) and (E), to provide for a new standard for individual eligible professionals to satisfy the PQRS beginning in 2014, based on satisfactory participation in a QCDR.

a. Proposed Criterion for the Satisfactory Participation for Individual Eligible Professionals in a QCDR for the 2017 PQRS Payment Adjustment

Section 1848(a)(8) of the Act provides that for covered professional services furnished by an eligible professional during 2015 or any subsequent year, if the eligible professional does not satisfactorily report data on quality measures for covered professional services for the quality reporting period for the year, the fee schedule amount for services furnished by such professional during the year shall be equal to the applicable percent of the fee schedule amount that would otherwise apply to such services. For 2016 and subsequent years, the applicable percent is 98.0 percent.

Section 1848(m)(3)(D) of the Act, as added by section 601(b) of the ATRA, authorizes the Secretary to treat an individual eligible professional as satisfactorily submitting data on quality measures under section 1848(m)(3)(A) of the Act if, in lieu of reporting measures under section 1848(k)(2)(C) of the Act, the eligible professional is satisfactorily participating in a QCDR for the year. ''Satisfactory participation'' is a new standard under the PQRS and

is a substitute for the underlying standard of ''satisfactory reporting'' data on covered professional services that eligible professionals must meet to avoid the PQRS payment adjustment. Currently, § 414.90(e)(2) states that individual eligible professionals must be treated as satisfactorily reporting data on quality measures if the individual eligible professional satisfactorily participates in a QCDR.

In the CY 2014 PFS final rule with comment period, although we finalized satisfactory participation criteria for the 2016 PQRS payment adjustment that are less stringent than the satisfactory participation criteria we finalized for the 2014 PQRS incentive, we noted that it was ''our intention to fully move towards the reporting of 9 measures covering at least 3 domains to meet the criteria for satisfactory participation for the 2017 PQRS payment adjustment'' (78 FR 74477). Specifically, we finalized the following two criteria for the satisfactory participation in a QCDR for the 2014 PQRS incentive at § 414.90(i)(3): For the 12-month 2014 reporting period, report at least 9 measures available for reporting under the QCDR covering at least 3 of the NQS domains, *and* report each measure for at least 50 percent of the eligible professional's applicable patients. Of the measures reported via a QCDR, the eligible professional must report on at least 1 outcome measure.

To be consistent with the number of measures reported for the satisfactory participation criterion we finalized for the 2014 PQRS incentive, for purposes of the 2017 PQRS payment adjustment (which would be based on data reported during the 12-month period that falls in CY 2015), we propose to modify § 414.90(k) to add the following criteria for individual eligible professionals to satisfactorily participate in a QCDR for the 2017 PQRS payment adjustment: For the 12-month reporting period for the 2017 PQRS payment adjustment, the eligible professional would report at least 9 measures available for reporting under a QCDR covering at least 3 of the NQS domains, AND report each measure for at least 50 percent of the eligible professional's patients. Of these measures, the eligible professional would report on at least 3 outcome measures, OR, if 3 outcomes measures are not available, report on at least 2 outcome measures and at least 1 of the following types of measures—resource use, patient experience of care, or efficiency/appropriate use.

Unlike the satisfactory participation criteria that were established for the 2014 PQRS incentive, we are proposing to modify § 414.90(k)(4) to require that an eligible professional report on not only 1 but at least 3 outcome measures (or, 2 outcome measures and at least 1 resource use, patient experience of care, or efficiency/appropriate use if 3 outcomes measures are not available). We are proposing this increase because it is our goal to, when appropriate, move towards the reporting of more outcome measures. We believe the reporting of outcome measures (for example, unplanned hospital readmission after a procedure) better captures the quality of care an eligible professional provides than, for example, process measures (for example, whether a Hemoglobin A1c test was performed for diabetic patients). In establishing this proposal, we understand that a QCDR may not have 3 outcomes measures within its quality measure data set. Therefore, as an alternative to a third outcome measure, we are allowing an eligible professional to report on at least 1 resource use, patient experience of care, or efficiency/appropriate use measure in lieu of an outcome measure.

We seek public comment on these proposals.

4. Proposed Criteria for Satisfactory Reporting for Group Practices Selected to Participate in the Group Practice Reporting Option (GPRO)

In lieu of reporting measures under section 1848(k)(2)(C) of the Act, section 1848(m)(3)(C) of the Act provides the Secretary with the authority to establish and have in place a process under which eligible professionals in a group practice (as defined by the Secretary) shall be treated as satisfactorily submitting data on quality measures. Accordingly, this section III.K.4 contains our proposed satisfactory reporting criteria for group practices selected to participate in the GPRO. Please note that, for a group practice to participate in the PQRS GPRO in lieu of participating as individual eligible professionals, a group practice is required to register to participate in the PQRS GPRO. For more information on GPRO participation, please visit *http://www.cms.gov/Medicare/Quality-Initiatives-Patient-Assessment-Instruments/PQRS/Group_Practice_Reporting_Option.html.* For more information on registration, please visit *http://www.cms.gov/Medicare/Medicare-Fee-for-Service-Payment/PhysicianFeedbackProgram/Self-Nomination-Registration.html.*

In the CY 2014 PFS final rule with comment period, we established a deadline of September 30 of the applicable reporting period (that is, September 30, 2014, for reporting periods occurring in 2014) for a group practice to register to participate in the GPRO (78 FR 74456). While we still seek to provide group practices with as much time as feasible to decide whether to register to participate in the PQRS as a GPRO, we weigh this priority with others, such as our desire to provide more timely feedback to participants of the PQRS, as well as other CMS quality reporting programs such as the VM. Since participation in the VM is tied to PQRS participation as discussed in section III.N. of this proposed rule, we have found that having a GPRO registration deadline so late in time would not allow us to collect information related to group practice participation in time to provide PQRS and VM participants with feedback reports earlier in time. Therefore, in an effort to provide timelier feedback, we are proposing to change the deadline by which a group practice must register to participate in the GPRO to June 30 of the applicable 12-month reporting period (that is, June 30, 2015, for reporting periods occurring in 2015). This proposed change would allow us to provide timelier feedback while still providing group practices with over 6 months to determine whether they should participate in the PQRS GPRO or, in the alternative, participate in the PQRS as individual eligible professionals. We invite public comment on this proposal.

a. Proposed Criteria for Satisfactory Reporting on PQRS Quality Measures Via the GPRO Web Interface for the 2017 PQRS Payment Adjustment

Consistent with the group practice reporting requirements under section 1848(m)(3)(C) of the Act, we propose to modify § 414.90(j) to incorporate the following criterion for the satisfactory reporting of PQRS quality measures for group practices registered to participate in the GPRO for the 12-month reporting period for the 2017 PQRS payment adjustment using the GPRO web interface for groups practices of 25–99 eligible professionals: The group practice would report on all measures included in the web interface; AND populate data fields for the first 248 consecutively ranked and assigned beneficiaries in the order in which they appear in the group's sample for each module or preventive care measure. If the pool of eligible assigned beneficiaries is less than 248, then the group practice would report on 100 percent of assigned beneficiaries. In other words, we understand that, in some instances, the sampling methodology CMS provides will not be able to assign at least 248 patients on which a group practice may report,

particularly those group practices on the smaller end of the range of 25–99 eligible professionals. If the group practice is assigned less than 248 Medicare beneficiaries, then the group practice would report on 100 percent of its assigned beneficiaries. A group practice would be required to report on at least 1 measure for which there is Medicare patient data.

In addition, we propose to modify § 414.90(j) to incorporate the following criteria for the satisfactory reporting of PQRS quality measures for group practices that registered to participate in the GPRO for the 12-month reporting period for the 2017 PQRS payment adjustment using the GPRO web interface for groups practices of 100 or more eligible professionals: The group practice would report all CAHPS for PQRS survey measures via a certified survey vendor. In addition, the group practice would report on all measures included in the GPRO web interface; AND populate data fields for the first 248 consecutively ranked and assigned beneficiaries in the order in which they appear in the group's sample for each module or preventive care measure. If the pool of eligible assigned beneficiaries is less than 248, then the group practice would report on 100 percent of assigned beneficiaries. A group practice would be required to report on at least 1 measure for which there is Medicare patient data.

To maintain consistency in this reporting criteria, we note that this proposed criteria is similar to the criterion we finalized for the satisfactory reporting of PQRS quality measures for group practices selected to participate in the GPRO for the 12-month reporting periods for the 2013 and 2014 PQRS incentives for group practices of 100 or more eligible professionals in the CY 2013 PFS final rule with comment period (see Table 49 at 78 FR 74486). However, we are proposing to reduce the patient sample size a group practice is required to report quality measures data from 411 to 248. We examined the sample size of this reporting criterion and determined that the sample size we are proposing reduces provider reporting burden while still allowing for statistically valid and reliable performance results. For the 25–99 sized groups reporting via the web interface, we recognize the proposal to move from reporting 218 to 248 patients per sample represents a slight increase in reporting. However, based on experience with the 218 count and subsequent statistical analysis, we believe that there are increased performance reliabilities and validities gained when changing the minimum reporting requirement to 248. We believe statistical reliability and validity is extremely important when measuring provider performance, particularly given the implications of the Physician VM and Physician Compare public reporting, discussed in section III.N and section III.J respectively. Therefore, we believe this proposed criterion improves on the criterion previously finalized.

For assignment of patients for group practices reporting via the GPRO web interface, in previous years, we have aligned with the Medicare Shared Savings Program methodology of beneficiary assignment (see 77 FR 69195). We note that, in section III.N. of this proposed rule, we are proposing to use a beneficiary attribution methodology for the VM for the claims-based quality measures and cost measures that is slightly different from the Medicare Shared Savings Program methodology, namely (1) eliminating the primary care service pre-step that is statutorily required for the Shared Savings Program and (2) including NPs, PA, and CNSs in step 1 rather than in step 2 of the attribution process. We believe that aligning with the VM's proposed method of attribution is appropriate, as the VM is directly tied to participation in the PQRS. Therefore, to achieve further alignment with the VM and for the reasons proposed in section III.N., we propose to adopt the attribution methodology changes proposed for the VM into the GPRO web interface beneficiary assignment methodology.

In addition, we note that, in the past, we have not provided guidance on those group practices that choose the GPRO web interface to report PQRS quality measures but have seen no Medicare patients for which the GPRO measures are applicable, or if they have no (i.e., 0 percent) responses for a particular module or measure. Since we are moving solely towards the implementation of PQRS payment adjustments, we seek to clarify this scenario here. If a group practice has no Medicare patients for which any of the GPRO measures are applicable, the group practice will not meet the criteria for satisfactory reporting using the GPRO web interface. Therefore, to meet the criteria for satisfactory reporting using the GPRO web interface, a group practice must be assigned and have sampled at least 1 Medicare patient for any of the applicable GPRO web interface measures (specified in Table 21). If a group practice does not typically see Medicare patients for which the GPRO web interface measures are applicable, we advise the group practice to participate in the PQRS via another reporting mechanism.

We invite public comment on these proposals.

b. Proposed Criteria for Satisfactory Reporting on Individual PQRS Quality Measures for Group Practices Registered To Participate in the GPRO via Registry and EHR for the 2017 PQRS Payment Adjustment

For registry reporting in the GPRO, in the CY 2014 PFS final rule with comment period (see Table 49 at 78 FR 74486), we finalized the following satisfactory reporting criteria for the submission of individual quality measures via registry for group practices comprised of 2 or more eligible professionals in the GPRO for the 2014 PQRS incentive: Report at least 9 measures, covering at least 3 of the NQS domains, OR, if less than 9 measures covering at least 3 NQS domains apply to the group practice, report 1—8 measures covering 1–3 NQS domains for which there is Medicare patient data, AND report each measure for at least 50 percent of the group practice's Medicare Part B FFS patients seen during the reporting period to which the measure applies. Measures with a 0 percent performance rate would not be counted. In the CY 2014 PFS final rule with comment period, we signaled that it was ''our intent to ramp up the criteria for satisfactory reporting for the 2017 PQRS payment adjustment to be on par or more stringent than the criteria for satisfactory reporting for the 2014 PQRS incentive'' (78 FR 74465).

Consistent with the criterion finalized for the 2014 PQRS incentive and the group practice reporting requirements under section 1848(m)(3)(C) of the Act, for those group practices that choose to report using a qualified registry, we propose here to modify § 414.90(j) to include the following satisfactory reporting criterion via qualified registry for ALL group practices who select to participate in the GPRO for the 2017 PQRS payment adjustment: The group practice would report at least 9 measures, covering at least 3 of the NQS domains. Of these measures, if a group practice sees at least 1 Medicare patient in a face-to-face encounter, the group practice would report on at least 2 measures in the cross-cutting measure set specified in Table 21. If less than 9 measures covering at least 3 NQS domains apply to the eligible professional, the group practice would report up to 8 measures covering 1–3 NQS domains for which there is Medicare patient data, AND report each measure for at least 50 percent of the eligible professional's Medicare Part B

FFS patients seen during the reporting period to which the measure applies. Measures with a 0 percent performance rate would not be counted.

As with individual reporting, we understand that there may be instances where a group practice may not have at least 9 measures applicable to a group practice's practice. In this instance, like the criterion we finalized for the 2014 PQRS incentive (see Table 49 at 78 FR 74486), a group practice reporting on less than 9 measures would still be able to meet the satisfactory reporting criterion via registry if the group practice reports on as many measures as are applicable to the group practice's practice. If a group practice reports on less than 9 measures, the group practice would be subject to the MAV process, which would allow us to determine whether a group practice should have reported quality data codes for additional measures and/or measures covering additional NQS domains. In addition, if a group practice does not report on at least 1 cross-cutting measure and the group practice has at least 1 eligible professional who sees at least 1 Medicare patient in a face-to-face encounter, the MAV will also allow us to determine whether a group practice should have reported on any of the proposed cross-cutting measures specified in Table 21. The MAV process we are proposing to implement for registry reporting is the same process that was established for reporting periods occurring in 2014 for the 2014 PQRS incentive. For more information on the registry MAV process, please visit *http://www.cms.gov/Medicare/Quality-Initiatives-Patient-Assessment-Instruments/PQRS/Downloads/2014_PQRS_Registry_MeasureApplicabilityValidation_12132013.zip.*

For EHR reporting, consistent with the criterion finalized for the 2014 PQRS incentive that aligns with the criteria established for meeting the CQM component of meaningful use under the EHR Incentive Program and in accordance with the group practice reporting requirements under section 1848(m)(3)(C) of the Act, for those group practices that choose to report using an EHR, we propose to modify § 414.90(j) to indicate the following satisfactory reporting criterion via a direct EHR product that is CEHRT or an EHR data submission vendor that is CEHRT for ALL group practices who select to participate in the GPRO for the 2017 PQRS payment adjustment: For the 12-month reporting period for the 2017 PQRS payment adjustment, the group practice would report 9 measures covering at least 3 domains. If the group practice's CEHRT does not contain patient data for at least 9 measures covering at least 3 domains, then the group practice must report the measures for which there is patient data. A group practice must report on at least 1 measure for which there is Medicare patient data.

We invite public comment on these proposals.

c. Proposed Criteria for Satisfactory Reporting on Individual PQRS Quality Measures for Group Practices Registered To Participate in the GPRO via a CMS-Certified Survey Vendor for the 2017 PQRS Payment Adjustment

In the CY 2014 PFS final rule with comment period, we introduced satisfactory reporting criterion for the 2014 PQRS incentive related to reporting the CG CAHPS survey measures via a CMS-certified survey vendor (see Table 49 at 78 FR 74486). Consistent with the criterion finalized for the 2014 PQRS incentive and the group practice reporting requirements under section 1848(m)(3)(C) of the Act, we are proposing the following 3 options (of which a group practice would be able to select 1 out of the 3 options) for satisfactory reporting for the 2017 PQRS payment adjustment for group practices comprised of 25 or more eligible professionals:

Proposed Option 1: If a group practice chooses to use a qualified registry, in conjunction with reporting the CAHPS for PQRS survey measures, for the 12-month reporting period for the 2017 PQRS payment adjustment, the group practice would report all CAHPS for PQRS survey measures via a certified vendor, and report at least 6 additional measures, outside of CAHPS for PQRS, covering at least 2 of the NQS domains using the qualified registry. If less than 6 measures apply to the group practice, the group practice must report all applicable measures. Of these 6 measures, if any eligible professional in the group practice sees at least 1 Medicare patient in a face-to-face encounter, the group practice would be required to report on at least 1 measure in the cross-cutting measure set specified in Table 21. We note that this proposed option to report 6 additional measures, including at least 1 cross-cutting measure if a group practice sees at least 1 Medicare patient in a face-to-face encounter, is consistent with the proposed criterion for satisfactory reporting for the 2017 PQRS payment adjustment via qualified registry. However, unlike the proposed criterion for satisfactory reporting for the 2017 PQRS payment adjustment via qualified registry without CG–CAHPS, we are only proposing the requirement to report 1 measure in the cross-cutting measure set specified in Table 21 instead of 2 measures as the CAHPS for PQRS measures are contained in the cross-cutting measure set.

Consistent with the proposed group practice reporting option solely using a qualified registry for the 2017 PQRS payment adjustment, we understand that there may be instances where a group practice may not have at least 6 measures applicable to a group practice's practice. In this instance, a group practice reporting on less than 6 measures would still be able to meet the satisfactory reporting criterion via registry if the group practice reports on as many measures as are applicable to the group practice's practice. If a group practice reports on less than 6 individual measures using the qualified registry reporting mechanism in conjunction with a CMS-certified survey vendor to report CAHPS for PQRS, the group practice would be subject to a measure application validity process (MAV), which would allow us to determine whether a group practice should have reported quality data codes for additional measures and/or measures covering additional NQS domains.

In addition, if a group practice does not report on at least 1 cross-cutting measure and the group practice has at least 1 eligible professional who sees at least 1 Medicare patient in a face-to-face encounter, the MAV will also allow us to determine whether a group practice should have reported on any of the proposed cross-cutting measures specified in Table 21. The MAV process we are proposing to implement for registry reporting is the same process that was established for reporting periods occurring in 2014 for the 2014 PQRS incentive. For more information on the registry MAV process, please visit *http://www.cms.gov/Medicare/Quality-Initiatives-Patient-Assessment-Instruments/PQRS/Downloads/2014_PQRS_Registry_MeasureApplicabilityValidation_12132013.zip.*

Proposed Option 2: If a group practice chooses to use a direct EHR product that is CEHRT or EHR data submission vendor that is CEHRT in conjunction with reporting the CAHPS for PQRS survey measures, for the 12-month reporting period for the 2017 PQRS payment adjustment, the group practice would report all CAHPS for PQRS survey measures via a certified vendor, and report at least 6 additional measures, outside of CAHPS for PQRS, covering at least 2 of the NQS domains using the direct EHR product that is CEHRT or EHR data submission vendor that is CEHRT. If less than 6 measures

apply to the group practice, the group practice must report all applicable measures. Of the additional 6 measures that must be reported in conjunction with reporting the CAHPS for PQRS survey measures, a group practice would be required to report on at least 1 measure for which there is Medicare patient data. We note that this proposed option to report 6 additional measures is consistent with the proposed criterion for satisfactory reporting for the 2017 PQRS payment adjustment via EHR without CAHPS for PQRS, since the CAHPS for PQRS survey only addresses 1 NQS domain.

Proposed Option 3: Alternatively, if a group practice chooses to use the GPRO web interface in conjunction with reporting the CAHPS for PQRS survey measures, we propose the following criterion for satisfactory reporting for the 2017 PQRS payment adjustment: For the 12-month reporting period for the 2017 PQRS payment adjustment, the group practice would report all CAHPS for PQRS survey measures via a certified vendor. In addition, the group practice would report on all measures included in the GPRO web interface; AND populate data fields for the first 248 consecutively ranked and assigned beneficiaries in the order in which they appear in the group's sample for each module or preventive care measure. If the pool of eligible assigned beneficiaries is less than 248, then the group practice would report on 100 percent of assigned beneficiaries. A group practice would be required to report on at least 1 measure for which there is Medicare patient data.

Furthermore, as was required for reporting periods occurring in 2014 (78 FR 74485), we propose that all group practices comprised of 100 or more eligible professionals that register to participate in the PQRS GPRO, regardless of the reporting mechanism the group practice chooses, would be required to select a CMS-certified survey vendor to administer the CAHPS for PQRS survey on their behalf. As such, for purposes of meeting the criteria for satisfactory reporting for the 2017 PQRS payment adjustment, a group practice participating in the PQRS GPRO would be required to use 1 of these 3 proposed reporting options mentioned above. We note that, for reporting periods occurring in 2014, we stated that we would administer and fund the collection of (CG–CAHPS) data for these groups (of 100 or more eligible professionals using the GPRO web interface that are required to report on CAHPS for PQRS survey measures) (78 FR 74452). We stated that we would bear the cost of administering the CAHPS for PQRS survey measures, as we were requiring the group practices to report on CAHPS for PQRS survey measures. Unfortunately, beginning in 2015, it will no longer be feasible for CMS to continue to bear the cost of group practices of 100 or more eligible professionals to report the CAHPS for PQRS survey measures. Therefore, the group practice would be required to bear the cost of administering the CAHPS for PQRS survey measures.

However, as CAHPS for PQRS was optional for group practices comprised of 25–99 eligible professionals in 2014 (78 FR 74485) and whereas we are proposing to require reporting of CAHPS for PQRS for group practices comprised of 100 or more eligible professionals, we propose that CAHPS for PQRS would be optional for groups of 25–99 and 2–24 eligible professionals. We note that all group practices that would be required to report or voluntarily elect to report CAHPS for PQRS would need to select and pay for a CMS-certified survey vendor to administer the CAHPS for PQRS survey on their behalf.

We invite public comment on these proposals.

d. Proposed Criteria for Satisfactory Reporting on Individual PQRS Quality Measures for Group Practices Selected To Participate in the GPRO To Report the CAHPS for PQRS Survey Measures via a CMS-Certified Survey Vendor for the 2018 PQRS Payment Adjustment and Subsequent Years

We believe these patient surveys are important tools for assessing beneficiary experience of care and outcomes and, moving forward, we would like to emphasize the importance of collecting patient experience of care data through the use of CAHPS for PQRS. Therefore, based on our authority under section 1848(m)(3)(C) of the Act to determine the criteria for satisfactory reporting for group practices under section 1848(m)(3)(C) of the Act, we are proposing to require that, in conjunction with other satisfactory reporting criteria we establish in future years, beginning with the 12-month reporting period for the 2018 PQRS payment adjustment, and for subsequent years, group practices comprised of 25 or more eligible professionals that are participating in the GPRO report and pay for the collection of the CAHPS for PQRS survey measures. We understand that the cost of administering the CAHPS for PQRS survey may be significant, so we are proposing this requirement well in advance of the year in which it would be first effective in order to provide group practices with early notice so that their practices may adjust accordingly.

We invite public comment on these proposals.

e. The Consumer Assessment of Healthcare Providers Surgical Care Survey (S–CAHPS)

In addition to CAHPS for PQRS, we received comments last year supporting the inclusion of the Consumer Assessment of Healthcare Providers Surgical Care Survey (S–CAHPS). The commenters stated that the CG–CAHPS survey would not accurately reflect the care provided by single- or multispecialty surgical or anesthesia groups. The commenters noted that S–CAHPS has been tested by the same standards as CG–CAHPS and follows the same collection mechanism as the CG–CAHPS. The S–CAHPS expands on the CG–CAHPS by focusing on aspects of surgical quality, which are important from the patient's perspective and for which the patient is the best source of information. The survey asks patients to provide feedback on surgical care, surgeons, their staff, and anesthesia care. It assesses patients' experiences with surgical care in both the inpatient and outpatient settings by asking respondents about their experience before, during and after surgery. We agree with the commenters on the importance of allowing for the administration of S–CAHPS reporting and wish to allow for reporting of S–CAHPS in the PQRS for reporting mechanisms other than the QCDR. However, at this time, due to the cost and time it would take to find vendors to collect S–CAHPS data, it is not technically feasible to implement the reporting of the S–CAHPS survey measures for the 2017 PQRS payment adjustment. We seek comments on how to allow for reporting of the S–CAHPS survey measures for the 2018 PQRS payment adjustment and beyond.

5. Statutory Requirements and Other Considerations for the Selection of PQRS Quality Measures for Meeting the Criteria for Satisfactory Reporting for 2015 and Beyond for Individual Eligible Professionals and Group Practices

CMS undergoes an annual Call for Measures that solicits new measures from the public for possible inclusion in the PQRS. During the Call for Measures, we request measures for inclusion in PQRS that meet the following statutory and non-statutory criteria.

Sections 1848(k)(2)(C) and 1848(m)(3)(C)(i) of the Act, respectively, govern the quality measures reported by individual eligible professionals and group practices under the PQRS. Under

section 1848(k)(2)(C)(i) of the Act, the PQRS quality measures shall be such measures selected by the Secretary from measures that have been endorsed by the entity with a contract with the Secretary under section 1890(a) of the Act, which is currently the National Quality Forum (NQF). However, in the case of a specified area or medical topic determined appropriate by the Secretary for which a feasible and practical measure has not been endorsed by the NQF, section 1848(k)(2)(C)(ii) of the Act authorizes the Secretary to specify a measure that is not so endorsed as long as due consideration is given to measures that have been endorsed or adopted by a consensus organization identified by the Secretary, such as the Ambulatory Quality Alliance (AQA). In light of these statutory requirements, we believe that, except in the circumstances specified in the statute, each PQRS quality measure must be endorsed by the NQF. Additionally, section 1848(k)(2)(D) of the Act requires that for each PQRS quality measure, ''the Secretary shall ensure that eligible professionals have the opportunity to provide input during the development, endorsement, or selection of measures applicable to services they furnish.'' The statutory requirements under section 1848(k)(2)(C) of the Act, subject to the exception noted previously, require only that the measures be selected from measures that have been endorsed by the entity with a contract with the Secretary under section 1890(a) of the Act (that is, the NQF) and are silent as to how the measures that are submitted to the NQF for endorsement are developed.

The basic steps for developing measures applicable to physicians and other eligible professionals prior to submission of the measures for endorsement may be carried out by a variety of different organizations. We do not believe there need to be special restrictions on the type or make-up of the organizations carrying out this basic process of development of physician measures, such as restricting the initial development to physician-controlled organizations. Any such restriction would unduly limit the basic development of quality measures and the scope and utility of measures that may be considered for endorsement as voluntary consensus standards for purposes of the PQRS.

In addition to section 1848(k)(2)(C) of the Act, section 1890A of the Act, which was added by section 3014(b) of the Affordable Care Act, requires that the Secretary establish a pre-rulemaking process under which certain steps occur with respect to the selection of certain categories of quality and efficiency measures, one of which is that the entity with a contract with the Secretary under section 1890(a) of the Act (that is, the NQF) convene multi-stakeholder groups to provide input to the Secretary on the selection of such measures. These categories are described in section 1890(b)(7)(B) of the Act, and include such measures as the quality measures selected for reporting under the PQRS. In accordance with section 1890A(a)(1) of the Act, the NQF convened multi-stakeholder groups by creating the Measure Applications Partnership (MAP). Section 1890A(a)(2) of the Act requires that the Secretary must make publicly available by December 1st of each year a list of the quality and efficiency measures that the Secretary is considering for selection through rulemaking for use in the Medicare program. The NQF must provide CMS with the MAP's input on the selection of measures by February 1st of each year. The lists of measures under consideration for selection through rulemaking in 2014 are available at *http://www.qualityforum.org/map/.*

As we noted above, section 1848(k)(2)(C)(ii) of the Act provides an exception to the requirement that the Secretary select measures that have been endorsed by the entity with a contract under section 1890(a) of the Act (that is, the NQF). We may select measures under this exception if there is a specified area or medical topic for which a feasible and practical measure has not been endorsed by the entity, as long as due consideration is given to measures that have been endorsed or adopted by a consensus organization identified by the Secretary. Under this exception, aside from NQF endorsement, we requested that stakeholders apply the following considerations when submitting measures for possible inclusion in the PQRS measure set:

- Measures that are not duplicative of another existing or proposed measure.
- Measures that are further along in development than a measure concept.
- CMS is not accepting claims-based-only reporting measures in this process.
- Measures that are outcome-based rather than clinical process measures.
- Measures that address patient safety and adverse events.
- Measures that identify appropriate use of diagnosis and therapeutics.
- Measures that include the NQS domain for care coordination and communication.
- Measures that include the NQS domain for patient experience and patient-reported outcomes.
- Measures that address efficiency, cost and resource use.

a. Proposed PQRS Quality Measures

Taking into consideration the statutory and non-statutory criteria we described previously, this section contains our proposals for the inclusion or removal of measures in PQRS for 2015 and beyond. We are classifying all proposed measures against six domains based on the NQS's six priorities, as follows:

(1) *Patient Safety.* These are measures that reflect the safe delivery of clinical services in all healthcare settings. These measures may address a structure or process that is designed to reduce risk in the delivery of healthcare or measure the occurrence of an untoward outcome such as adverse events and complications of procedures or other interventions.

(2) *Person and Caregiver-Centered Experience and Outcomes.* These are measures that reflect the potential to improve patient-centered care and the quality of care delivered to patients. They emphasize the importance of collecting patient-reported data and the ability to impact care at the individual patient level, as well as the population level. These are measures of organizational structures or processes that foster both the inclusion of persons and family members as active members of the health care team and collaborative partnerships with providers and provider organizations or can be measures of patient-reported experiences and outcomes that reflect greater involvement of patients and families in decision making, self-care, activation, and understanding of their health condition and its effective management.

(3) *Communication and Care Coordination.* These are measures that demonstrate appropriate and timely sharing of information and coordination of clinical and preventive services among health professionals in the care team and with patients, caregivers, and families to improve appropriate and timely patient and care team communication. They may also be measures that reflect outcomes of successful coordination of care.

(4) *Effective Clinical Care.* These are measures that reflect clinical care processes closely linked to outcomes based on evidence and practice guidelines or measures of patient-centered outcomes of disease states.

(5) *Community/Population Health.* These are measures that reflect the use of clinical and preventive services and achieve improvements in the health of the population served. They may be

measures of processes focused on primary prevention of disease or general screening for early detection of disease unrelated to a current or prior condition.

(6) *Efficiency and Cost Reduction.* These are measures that reflect efforts to lower costs and to significantly improve outcomes and reduce errors. These are measures of cost, resource use and appropriate use of healthcare resources or inefficiencies in healthcare delivery.

Please note that the PQRS quality measure specifications for any given proposed PQRS individual quality measure may differ from specifications for the same quality measure used in prior years. For example, for the proposed PQRS quality measures that were selected for reporting in 2014 and beyond, please note that detailed measure specifications, including the measure's title, for the proposed individual PQRS quality measures for 2013 and beyond may have been updated or modified during the NQF endorsement process or for other reasons.

In addition, due to our desire to align measure titles with the measure titles that have been finalized for 2013, 2014, 2015, and potentially subsequent years of the EHR Incentive Program, we note that the measure titles for measures available for reporting via EHR may change. To the extent that the EHR Incentive Program updates its measure titles to include version numbers (77 FR 13744), we will use these version numbers to describe the PQRS EHR measures that will also be available for reporting for the EHR Incentive Program. We will continue to work toward complete alignment of measure specifications across programs whenever possible.

Through NQF's measure maintenance process, NQF-endorsed measures are sometimes updated to incorporate changes that we believe do not substantively change the nature of the measure. Examples of such changes could be updated diagnosis or procedure codes or changes to exclusions to the patient population or definitions. We believe these types of maintenance changes are distinct from substantive changes to measures that result in what are considered new or different measures. Further, we believe that non-substantive maintenance changes of this type do not trigger the same agency obligations under the Administrative Procedure Act.

In the CY 2013 PFS final rule with comment period, we finalized our proposal providing that if the NQF updates an endorsed measure that we have adopted for the PQRS in a manner that we consider to not substantively change the nature of the measure, we would use a subregulatory process to incorporate those updates to the measure specifications that apply to the program (77 FR 69207). We believe this adequately balances our need to incorporate non-substantive NQF updates to NQF-endorsed measures in the most expeditious manner possible, while preserving the public's ability to comment on updates that so fundamentally change an endorsed measure that it is no longer the same measure that we originally adopted. We also note that the NQF process incorporates an opportunity for public comment and engagement in the measure maintenance process. We will revise the Specifications Manual and post notices to clearly identify the updates and provide links to where additional information on the updates can be found. Updates will also be available on the CMS PQRS Web site at *http://www.cms.gov/Medicare/Quality-Initiatives-Patient-Assessment-Instruments/PQRS/index.html.*

CMS is not the measure steward for most of the measures available for reporting under the PQRS. We rely on outside measure stewards and developers to maintain these measures. In Table 24, we are proposing that certain measures be removed from the PQRS measure set due to the measure owner/developer indicating that it will not be able to maintain the measure. We note that this proposal is contingent upon the measure owner/developer not being able to maintain the measure. Should we learn that a certain measure owner/developer is able to maintain the measure, or that another entity is able to maintain the measure in a manner that allows the measure to be available for reporting under the PQRS for the CY 2017 PQRS payment adjustment, we propose to keep the measure available for reporting under the PQRS and therefore not finalize our proposal to remove the measure. In addition, if, after the display of this proposed rule, we discover additional measures within the current PQRS measure set that a measure owner/developer can no longer maintain, we propose to remove these measures from reporting for the PQRS beginning in 2015. We will discuss any such instances in the CY 2015 PFS final rule with comment period.

In addition, we note that we have received feedback from stakeholders, particularly first-time participants who find it difficult to understand which measures are applicable to their particular practice. In an effort to aide eligible professionals and group practices to determine what measures best fit their practice, and in collaboration with specialty societies, we are beginning to group our final measures available for reporting according to specialty. The current listing of our measures by specialty can be found on our Web site at *http://www.cms.gov/Medicare/Quality-Initiatives-Patient-Assessment-Instruments/PQRS/index.html.* Please note that these groups of measures are meant to provide guidance to those eligible professionals seeking to determine what measures to report. Eligible professionals are not required to report measures according to these suggested groups of measures. In addition to group measures according to specialty, we also plan to have a measure subset for measures that specifically addresses multiple chronic conditions. As measures are adopted or revised, we will continue to update these groups to reflect the measures available under the PQRS, as well as add more specialties.

In the CY 2014 PFS final rule with comment period, we stated that ''unless there are errors discovered in updated electronic measure specifications, the PQRS intends to use the most recent, updated versions of electronically specified clinical quality measures for that year'' (78 FR 74489). We propose that, if we discover errors in the most recently updated electronic measure specifications for a certain measure, we would use the version of electronic measure specifications that immediately precedes the most recently updated electronic measure specifications.

Additionally, we noted that, with respect to the following e-measure CMS140v2, Breast Cancer Hormonal Therapy for Stage IC–IIIC Estrogen Receptor/Progesterone Receptor (ER/PR) Positive Breast Cancer (NQF 0387), a substantive error was discovered in the June 2013 version of this electronically specified clinical quality measure. Therefore, the PQRS required the use of the prior, December 2012 version of this measure, which is CMS140v1 (78 FR 74489). Please note that, consistent with other EHR measures, since a more recent and corrected version of this measure has been developed, we will require the reporting of the most recent, updated versions of the measure Breast Cancer Hormonal Therapy for Stage IC–IIIC Estrogen Receptor/Progesterone Receptor (ER/PR) Positive Breast Cancer (NQF 0387)—currently version CMS140v3—for the year.

b. Proposed Cross-Cutting Measure Set for 2015 and Beyond

In accordance with our proposed criteria for the satisfactory reporting of

PQRS measures for the 2017 PQRS payment adjustment via claims and registry that requires an eligible professional or group practice to report on at least 2 cross-cutting measures, we are proposing the following 18 cross-cutting measure set specified in Table 21 for 2015 and beyond. Please note that our rationale for proposing each of these measures is found below the measure description. We have also indicated the PQRS reporting mechanism or mechanisms through which each proposed measure could be submitted. In addition to seeking comment on this proposed cross-cutting measure set specified in Table 21, we seek comment on other measures that commenters believe should be included in this proposed cross-cutting measure set for 2015 and beyond.

BILLING CODE 4120–01–P

TABLE 21: Proposed Individual Quality Cross-Cutting Measures for the PQRS to Be Available for Satisfactory Reporting Via Claims, Registry, and EHR Beginning in 2015

NQF/ PQRS	CMS E-Measure ID	NQS Domain	Measure Title and Description[¥]	Measure Steward	Claims	CSV	Registry	EHR	GPRO (Web Interface)*	Measures Groups	Other Quality Reporting Programs
N/A /N/A	N/A	Community /Population Health	**Tobacco Use and Help with Quitting Among Adolescents:** Percentage of adolescents 13 to 20 years of age with a primary care visit during the measurement period for whom tobacco use status was documented and who received help quitting if identified as a tobacco user. **Rationale:** CMS is proposing this measure based on our exception authority under section 1848(k)(2)(C)(ii) of the Act that provides an exception to the requirement that the Secretary select measures that have been endorsed by the entity with a contract under section 1890(a) of the Act (that is, the NQF). This is a preventive measure targeting support of adolescent populations in quitting smoking, which represents a clinical gap in the program.Several provider types are able to report this measure in a variety of outpatient settings including Pediatricians, Family Practice physicians, and Internists. This measure is also applicable for a broad patient sample further positioning this measure as cross-cutting.	NCQA / NCIQM			X			X	
0028 /226	138 v2	Community /Population Health	**Preventive Care and Screening: Tobacco Use: Screening and Cessation Intervention:** Percentage of patients aged 18 years and older who were screened for tobacco use one or more times within 24 months AND who received cessation counseling intervention if identified as a tobacco user. **Rationale:** This measure has been identified as a cross-cutting measure as it represents a screening assessment for tobacco use that most eligible professionals may perform and is applicable to most adult patients. This measure is applicable in various outpatient settings and can be reported by most eligible professionals that see adult patients. This measure was finalized for reporting in the PQRS in the CY 2014 PFS final rule (see Table 52 at 78 FR 74498).	AMA-PCPI	X		X	X	X	X	ACO MU2 Million Hearts
0038 /240	117 v2	Community /Population Health	**Childhood Immunization Status:** Percentage of children 2 years of age who had four diphtheria, tetanus and acellular pertussis (DTaP); three polio (IPV), one measles, mumps and rubella (MMR); three H influenza type B (HiB); three hepatitis B (Hep B); one chicken pox (VZV); four pneumococcal conjugate (PCV); one hepatitis A (Hep A); two or three rotavirus (RV); and two influenza (flu) vaccines by their second birthday. **Rationale:** This measure is clincally significant for all pediatric patients and is applicable to a	NCQA				X			MU2

NQF/ PQRS	CMS E-Measure ID	NQS Domain	Measure Title and Description[Y]	Measure Steward	Claims	CSV	Registry	EHR	GPRO (Web Interface)*	Measures Groups	Other Quality Reporting Programs
			variety of eligible professionals that provide services to pediatric patients making it reportable by a large segment of eligible professionals.This measure was finalized for reporting in the PQRS in the CY 2013 PFS final rule (see Table 95 at 77 FR 69215).								
0418 /134	2v3	Community /Population Health	**Preventive Care and Screening: Screening for Clinical Depression and Follow-Up Plan:** Percentage of patients aged 12 years and older screened for clinical depression on the date of the encounter using an age appropriate standardized depression screening tool AND if positive, a follow-up plan is documented on the date of the positive screen. **Rationale:** This measure represents a screening assessment for depression that most eligible professionals may perform and is applicable to most adult patients, making it broadly reportable as a cross-cutting measure. This measure is also applicable in a variety of outpatient settings, enhancing the reportability of this measure. This measure was finalized for reporting in the PQRS in the CY 2013 PFS final rule (see Table 95 at 77 FR 69215).	CMS/QIP	X		X	X	X	X	ACO MU2
0419 /130	68v 3	Patient Safety	**Documentation of Current Medications in the Medical Record:** Percentage of visits for patients aged 18 years and older for which the eligible professional attests to documenting a list of current medications using all immediate resources available on the date of the encounter. This list must include ALL known prescriptions, over-the-counters, herbals, and vitamin/mineral/dietary (nutritional) supplements AND must contain the medications' name, dosage, frequency and route of administration. **Rationale:** This measure targets the documentation of current medications in the medical record, which is a clinical process that most eligible professionals may perform and is applicable to most adult patients. This measure is also applicable in various outpatient settings. For these reasons, this measure is identified as cross-cutting.This measure was finalized for reporting in the PQRS in the CY 2014 PFS final rule (see Table 52 at 78 FR 74498).	CMS/QIP	X		X	X	X	X	ACO MU2
0421 /128	69v 2	Community /Population Health	**Preventive Care and Screening: Body Mass Index (BMI) Screening and Follow-Up:** Percentage of patients aged 18 years and older with a documented BMI during the current encounter or during the previous 6 months AND when the BMI is outside of normal parameters, a follow-up plan is documented during the encounter or during the previous 6 months of the encounter. Normal Parameters: Age 65 years and older BMI ≥ 23 and < 30; Age 18-64 years BMI ≥ 18.5 and < 25 **Rationale:** This measure has been identified as	CMS/QIP	X		X	X	X	X	ACO MU2

NQF/ PQRS	CMS E-Measure ID	NQS Domain	Measure Title and Description[¥]	Measure Steward	Claims	CSV	Registry	EHR	GPRO (Web Interface)*	Measures Groups	Other Quality Reporting Programs
			a cross-cutting measure as it represents a screening assessment for BMI that most eligible professionals may perform and is applicable to most adult patients in various outpatient settings. This measure was finalized for reporting in the PQRS in the CY 2014 PFS final rule (see Table 52 at 78 FR 74498).								
N/A /374	50v 2	Communica tion and Care Coordinatio n	**Closing the Referral Loop: Receipt of Specialist Report:** Percentage of patients with referrals, regardless of age, for which the referring provider receives a report from the provider to whom the patient was referred. **Rationale:** This measure represents communication between a variety of eligible professionals and promotes positive outcomes for patients. It is reportable by a broad spectrum of providers. In addition,this measure is applicable to most adult patients, further enhancing its reportability across disciplines and speciaties.. This measure was finalized for reporting in the PQRS in the CY 2013 PFS final rule (see Table 95 at 77 FR 69215).	CMS/BAH				X			MU2
0097 /046	N/A	Communica tion and Care Coordinatio n	**Medication Reconciliation:** Percentage of patients aged 65 years and older discharged from any inpatient facility (e.g. hospital, skilled nursing facility, or rehabilitation facility) and seen within 30 days following discharge in the office by the physician, prescribing practitioner, registered nurse, or clinical pharmacist providing on-going care who had a reconciliation of the discharge medications with the current medication list in the outpatient medical record documented. **Rationale:** This measure has been identified as a cross-cutting measure as it represents the clinical process of medication reconciliation, which most eligible professionals may perform and is applicable to most elderly patients in various inpatient/outpatient settings, making this a broadly reportable measure. This measure was finalized for reporting in the PQRS in the CY 2013 PFS final rule (see Table 95 at 77 FR 69215).	AMA-PCPI / NCQA			X				
0041 /110	147 v2	Community /Population Health	**Preventive Care and Screening: Influenza Immunization:** Percentage of patients aged 6 months and older seen for a visit between October 1 and March 31 who received an influenza immunization OR who reported previous receipt of an influenza immunization. **Rationale:** This measure represents a screening assessmentfor influenza immunization that most eligible professionals may perform and is applicable to most adult and pediatric patients. This measure is applicable in various outpatient settings.This measure was finalized for reporting in the PQRS in the CY 2014 PFS final rule (see Table 52 at 78 FR 4498).	AMA-PCPI	X		X	X	X	X	ACO MU2
0043 /111	127 v2	Community /Population Health	**Pneumonia Vaccination Status for Older Adults:** Percentage of patients 65 years of age and older who have ever received a	NCQA	X		X	X	X	X	ACO MU2

NQF/ PQRS	CMS E-Measure ID	NQS Domain	Measure Title and Description[y]	Measure Steward	Claims	CSV	Registry	EHR	GPRO (Web Interface)*	Measures Groups	Other Quality Reporting Programs
			pneumococcal vaccine. **Rationale:** This measure represents a screening assessment for pneumonia vaccination that most eligible professionals may perform and is applicable to most elderly patients. This measure is also applicable in various outpatient settings, which further enhances its reportability across various disciplines and specialties. This measure was finalized for reporting in the PQRS in the CY 2013 PFS final rule (see Table 95 at 77 FR 69215).								
N/A /317	22v 2	Community /Population Health	**Preventive Care and Screening: Screening for High Blood Pressure and Follow-Up Documented:** Percentage of patients aged 18 years and older seen during the reporting period who were screened for high blood pressure (BP) AND a recommended follow-up plan is documented based on the current blood pressure reading as indicated. **Rationale:** This measure represents a common screening assessment for high blood pressure that most eligible professionals perform and is applicable to most adult and elderly patients in a variety of inpatient/outpatient settings. As such, this measure has been identified as cross-cutting.This measure was finalized for reporting in the PQRS in the CY 2013 PFS final rule (see Table 95 at 77 FR 69215).	CMS/QIP	X		X	X	X	X	ACO MU2 Million Hearts
0101 /318	139 v2	Patient Safety	**Falls: Screening for Fall Risk:** Percentage of patients 65 years of age and older who were screened for future fall risk at least once during the measurement period. **Rationale:** This measure represents a fall risk screening assessment that most eligible professionals may perform and is applicable to most elderly patients. This screen tool may be commonly used by providers serving this patient population in a variety of outpatient settings and as such this measure has been identified as a cross-cutting measure. This measure was finalized for reporting in the PQRS in the CY 2013 PFS final rule (see Table 95 at 77 FR 69215).	NCQA				X	X		ACO MU2
0326 /047	N/A	Person and Caregiver-Centered Experience and Outcomes	**Care Plan:** Percentage of patients aged 65 years and older who have an care plan or surrogate decision maker documented in the medical record or documentation in the medical record that an care plan was discussed but the patient did not wish or was not able to name a surrogate decision maker or provide an care plan. **Rationale:** This measure has been identified as a cross-cutting measure as it represents the development of a care plan that most eligible professionals may perform and is applicable to most elderly patients in various inpatient/outpatient settings. This measure was finalized for reporting in the PQRS in the CY 2013 PFS final rule (see Table 95 at 77 FR 69215).	AMA-PCPI / NCQA	X		X			X	

NQF/ PQRS	CMS E-Measure ID	NQS Domain	Measure Title and Description[¥]	Measure Steward	Claims	CSV	Registry	EHR	GPRO (Web Interface)*	Measures Groups	Other Quality Reporting Programs
0420 /131	N/A	Communication and Care Coordination	**Pain Assessment and Follow-Up:** Percentage of visits for patients aged 18 years and older with documentation of a pain assessment using a standardized tool(s) on each visit AND documentation of a follow-up plan when pain is present. **Rationale:** This measure represents a screening assessment for pain and follow-up care that most eligible professionals may perform and is applicable to most adult patients seen in a variety of outpatient settings. For these reasons, this measure has been identified as a cross-cutting measure. This measure was finalized for reporting in the PQRS in the CY 2013 PFS final rule (see Table 95 at 77 FR 69215).	CMS/QIP	X		X			X	
AQA Adopted /182	N/A	Communication and Care Coordination	**Functional Outcome Assessment:** Percentage of visits for patients aged 18 years and older with documentation of a current functional outcome assessment using a standardized functional outcome assessment tool on the date of encounter AND documentation of a care plan based on identified functional outcome deficiencies on the date of the identified deficiencies. **Rationale:** This measure has been identified as a cross-cutting measure as it represents a functional assessment that physical therapist/chriopratic eligible professionals may perform and is applicable to most adult patients. This measure was finalized for reporting in the PQRS in the CY 2013 PFS final rule (see Table 95 at 77 FR 69215).	CMS/QIP	X		X				
0005 &0006 /321	N/A	Person and Caregiver Experience and Outcomes	**CAHPS for PQRS Clinician/Group Survey:** • Getting timely care, appointments,and information; • How well providers Communicate; • Patient's Rating of Provider; • Access to Specialists; • Health Promotion & Education; • Shared Decision Making; • Health Status/Functional Status; • Courteous and Helpful Office Staff; • Care Coordination; • Between Visit Communication; • Helping Your to Take Medication as Directed; and • Stewardship of Patient Resources **Rationale:** This measure has been identified as an outcome-based cross-cutting measure due to it directly measureing patient satisfaction of office visits. The data collected by the survey provides information based on a group practice's performance of the patient's care. This information potentially impacts a variety of eligible professionals based on the survay data received from patients. This measure was finalized for reporting in the PQRS in the CY 2013 PFS final rule (see Table 95 at 77 FR 69215).	AHRQ		X					ACO

NQF/ PQRS	CMS E-Measure ID	NQS Domain	Measure Title and Description¥	Measure Steward	Claims	CSV	Registry	EHR	GPRO (Web Interface)*	Measures Groups	Other Quality Reporting Programs
0018 /236	165 v2	Effective Clinical Care	**Controlling High Blood Pressure:** Percentage of patients 18-85 years of age who had a diagnosis of hypertension and whose blood pressure was adequately controlled (<140/90 mmHg) during the measurement period. **Rationale:** This measure has been identified as a cross-cutting measure as it represents patient care that is clinically appropriate for many eligible professionals treating adult patients. This measure is applicable to most adult patients in various outpatient settings. This measure was finalized for reporting in the PQRS in the CY 2014 PFS final rule (see Table 52 at 78 FR 4498).	NCQA	X		X	X	X	X	ACO MU2 Million Hearts
N/A/ N/A	N/A	Community /Population Health	**Screening for Hepatitis C Virus (HCV) for Patients at High Risk:** Percentage of patients with one or more of the following: a history of injection drug use, patients who received blood transfusions prior to 1992, OR patients who were born in the years 1945–1965 who received a one-time hepatitis C virus (HCV) antibody test. **Rationale:** CMS is proposing this measure based on our exception authority under I 848(k)(2)(C)(ii) of the Act that provides an exception to the requirement that the Secretary select measures that have been endorsed by the entity with a contract under section I 890(a) of the Act (that is, the NQF). This measure is complementary of Hepatitis C measures currently in the program, representing a clinical gap not currently captured by PQRS. This measure is also proposed as a cross-cutting measure because screening for Hep C is applicable for a broad patient sample and a variety of eligible professionals in various outpatient settings.	AGA / AASLD / AMA-PCPI			X				

¥ Measure details including titles, descriptions and measure owner information may vary during a particular program year. This is due to the timing of measure specification preparation and the measure versions used by the various reporting options/methods. Please refer to the measure specifications that apply for each of the reporting options/methods for specific measure details.

c. Proposed New PQRS Measures Available for Reporting for 2015 and Beyond

Table 22 contains the additional measures we are proposing to include in the PQRS measure set for CY 2015 and beyond. Please note that not all of the proposed cross-cutting measures may appear in Table 22, as some of the propose cross-cutting measures specified in Table 21 were finalized in the CY 2013 or CY 2014 PFS final rules with comment period. Please note that our rationale for proposing each of these measures is found below the measure description. We have also indicated the PQRS reporting mechanism or mechanisms through which each proposed measure could be submitted.

TABLE 22: Proposed Individual Quality Measures and Those Included in Measures Groups for the PQRS to Be Available for Satisfactory Reporting Beginning in 2015

NQF/ PQRS	CMS E-Measure ID	NQS Domain	Measure Title and Description*	Measure Steward	Claims	CSV	Registry	EHR	GPRO (Web Interface)*	Measures Groups	Other Quality Reporting Programs
1879 /N/A	N/A	Patient Safety	**Adherence to Antipsychotic Medications for Individuals with Schizophrenia:** The percentage of individuals 18 years of age or greater as of the beginning of the measurement period with schizophrenia or schizoaffective disorder who are prescribed an antipsychotic medication, with adherence to the antipsychotic medication [defined as a Proportion of Days Covered (PDC)] of at least 0.8 during the measurement period (12 consecutive months). **Rationale:** This measure satisfies 1848(k)(2)(C)(i) of the Act as this measure is NQF-endorsed. This measure represents a PQRS program gap of measures targeting a patient population with active psycosis or psychiatric disorders. This measure is also reportable by behavioral/mental health providers.	CMS / FMQAI			X				
N/A /N/A	N/A	Patient Safety	**Adherence to Mood Stabilizers for Individuals with Bipolar I Disorder:** The measure calculates the percentage of individuals 18 years of age or greater as of the beginning ofthe measurement period with bipolar I disorder who are prescribed a mood stabilizer medication, with adherence to the mood stabilizer medication [defined as a Proportion of Days Covered (PDC)] of at least 0.8 during the measurement period (12 consecutive months). **Rationale:** We are proposing this measure based on our exception authority under section 1848(k)(2)(C)(ii) of the Act that provides an exception to the requirement that the Secretary select measures that have been endorsed by the entity with a contract under section 1890(a) of the Act (that is, the NQF). This measure represents a PQRS program gap of measures targeting a patient population with active psychosis or psychiatric disorders. This measure is also reportable by behavioral/mental health providers.	CMS/FMQ AI	X						
N/A /N/A	N/A	Effective Clinical Care	**Adult Primary Rhegmatogenous Retinal Detachment Reoperation Rate:** % of surgeries for primary rhegmatogenous retinal detachment where the retina remains attached after only one surgery. **Rationale:** We are proposing this measure based on our exception authority under section 1848(k)(2)(C)(ii) of the Act that provides an exception to the requirement that the Secretary select measures that have been endorsed by the entity with a contract under section 1890(a) of the Act (that is, the NQF). This is an outcome measure that represents a new clinical concept for PQRS. This measure will be reportable by Opthamologists.	AA			X				
N/A /N/A	N/A	Effective Clinical Care	**Adult Primary Rhegmatogenous Retinal Detachment Surgery Success Rate:** Percentage (%) of Retinal Detachment cases achieving flat	American Association of Eye and			X				

NQF/ PQRS	CMS E-Measure ID	NQS Domain	Measure Title and Description*	Measure Steward	Claims	CSV	Registry	EHR	GPRO (Web Interface)*	Measures Groups	Other Quality Reporting Programs
			retinas 6 months post surgery. **Rationale:** We are proposing this measure based on our exception authority under section 1848(k)(2)(C)(ii) of the Act that provides an exception to the requirement that the Secretary select measures that have been endorsed by the entity with a contract under section 1890(a) of the Act (that is, the NQF). This is an outcome measure that represents a new clinical concept for PQRS. This measure will be reportable by Opthamologists.	Ear Centers of Excellence / The Australian Council on Healthcare Standards							
N/A /N/ A	N/A	Person and Caregiver-Centered Experience and Outcomes	**ALS Patient Care Preferences:** Percentage of patients diagnosed with ALS who were offered at least once annually assistance in planning for end of life issues (e.g., advance directives, invasive ventilation, hospice). **Rationale:** We are proposing this measure based on our exception authority under section 1848(k)(2)(C)(ii) of the Act that provides an exception to the requirement that the Secretary select measures that have been endorsed by the entity with a contract under section 1890(a) of the Act (that is, the NQF). This is a process measure that represents a new clinical concept for PQRS, filling a current clinical gap in the program for neurodegenerative disease. This measure would be reportable for eligible professionals within the scope of neurology.	AAN			X				
N/A /N/ A	N/A	Effective Clinical Care	**Annual Hepatitis C Virus (HCV) Screening for Patients who are Active Injection Drug Users:** Percentage of patients regardless of age who are active injection drug users who received a hepatitis C virus (HCV) antibody test or HCV ribonucleic acid (RNA) test within the 12 month reporting period. **Rationale:** We are proposing this measure based on our exception authority under section 1848(k)(2)(C)(ii) of the Act that provides an exception to the requirement that the Secretary select measures that have been endorsed by the entity with a contract under section 1890(a) of the Act (that is, the NQF). This measure addresses a clinical gap in PQRS by targeting active injection drug users. This measure is reportable by Gastroenterologists, Hepatologists, Infectious Disease providers and Primary Care providers.	AGA / AASLD / PCPI			X				
N/A /N/ A	N/A	Person and Caregiver-Centered Experience and Outcomes	**Average change in functional status following lumbar spine fusion surgery:** Average change from pre-operative functional status assessment to 1 year (9 to 15 months) post-operative functional status using the Oswestry Disability Index (ODI version 2.1a) patient reported outcome tool. **Rationale:** We are proposing this measure based on our exception authority under section 1848(k)(2)(C)(ii) of the Act that provides an exception to the requirement that the Secretary select measures that have been endorsed by the entity with a contract under section 1890(a) of	MNCM			X				

NQF/ PQRS	CMS E-Measure ID	NQS Domain	Measure Title and Description[¥]	Measure Steward	Claims	CSV	Registry	EHR	GPRO (Web Interface)*	Measures Groups	Other Quality Reporting Programs
			the Act (that is, the NQF). This outcome measure represents a clinical gap in the program and is reportable by Neurosurgery and Orthopedic Surgery providers.								
N/A /N/ A	N/A	Efficiency and Cost Reduction	**Avoidance of inappropriate use of imaging for adult ED patients with traumatic low back pain:** Avoidance of inappropriate use of imaging for adult ED patients with atraumatic low back pain. **Rationale:** We are proposing this measure based on our exception authority under section 1848(k)(2)(C)(ii) of the Act that provides an exception to the requirement that the Secretary select measures that have been endorsed by the entity with a contract under section 1890(a) of the Act (that is, the NQF). This measure represents a program gap and targets a provider group currently under represented in the program, imaging specialists and radiologists.	ACEP			X				
N/A /N/ A	N/A	Patient Safety	**Cataract Surgery with Intra-Operative Complications (Unplanned Rupture of Posterior Capsule requiring unplanned vitrectomy):** Rupture of the posterior capsule during anterior segment surgery requiring vitrectomy. **Rationale:** We are proposing this measure based on our exception authority under section 1848(k)(2)(C)(ii) of the Act that provides an exception to the requirement that the Secretary select measures that have been endorsed by the entity with a contract under section 1890(a) of the Act (that is, the NQF). This outcome measure is reportable by Opthamologists and is proposed to be included within the Cataracts Measure Group, complementing the existing cataracts measures with a clinical focus not currently caprtured within PQRS.	AAEECE / ACHS			X			X	
N/A /N/ A	N/A	Effective Clinical Care	**Cataract Surgery: Difference Between Planned and Final Refraction:** Percentage of patients who achieve planned refraction within +-1,0 D. **Rationale:** We are proposing this measure based on our exception authority under section 1848(k)(2)(C)(ii) of the Act that provides an exception to the requirement that the Secretary select measures that have been endorsed by the entity with a contract under section 1890(a) of the Act (that is, the NQF). This outcome measure is reportable by Opthamologists and is proposed to be included within the Cataracts Measure Group, complementing the existing catarcts measures with a clinical focus not currently caprtured within PQRS.	AAEECE / ACHS			X			X	
188 5 /N/ A	N/A	Person and Caregiver-Centered Experience and Outcomes	**Depression Response at Twelve Months-Progress Towards Remission:** Adult patients age 18 and older with major depression or dysthymia and an initial PHQ-9 score > 9 who demonstrate a response to treatment at twelve months defined as a PHQ-9 score that is reduced by 50% or greater from the initial PHQ-9 score. This measure applies to both patients with newly	MNCM			X				

NQF/ PQRS	CMS E-Measure ID	NQS Domain	Measure Title and Description[¥]	Measure Steward	Claims	CSV	Registry	EHR	GPRO (Web Interface)*	Measures Groups	Other Quality Reporting Programs
			diagnosed and existing depression identified during the defined measurement period whose current PHQ-9 score indicates a need for treatment. **Rationale:** This measure satisfies 1848(k)(2)(C)(i) of the Act as this measure is NQF-endorsed. This measure is an outcome measure that complements existing depression measures within the program.								
N/A /N/ A	N/A	Patient Safety	**Discontinuation of Antiviral Therapy for Inadequate Viral Response:** Percentage of patients aged 18 years and older with a diagnosis of hepatitis C genotype 1 who have an inadequate response to antiviral treatment for whom antiviral treatment was discontinued. **Rationale:** We are proposing this measure based on our exception authority under section 1848(k)(2)(C)(ii) of the Act that provides an exception to the requirement that the Secretary select measures that have been endorsed by the entity with a contract under section 1890(a) of the Act (that is, the NQF). This process measure represents a clinical complement to existing Hepatitis C measures currently included in the program.	AGA / AASLD / PCPI			X				
N/A /N/ A	N/A	Person and Caregiver-Centered Experience and Outcomes	**Discussion and Shared Decision Making Surrounding Treatment Options:** Percentage of patients aged 18 years and older with a diagnosis of hepatitis C with whom a physician or other clinician reviewed the range of treatment options appropriate to their genotype and demonstrated a shared decision making approach with the patient. To meet the measure, there must be documentation in the patient record of a discussion between the physician/clinician and the patient that includes all of the following: • Treatment choices appropriate to genotype • Risks and benefits • Evidence of effectiveness • Patient preferences toward the outcome of the treatment. **Rationale:** We are proposing this measure based on our exception authority under section 1848(k)(2)(C)(ii) of the Act that provides an exception to the requirement that the Secretary select measures that have been endorsed by the entity with a contract under section 1890(a) of the Act (that is, the NQF). This patient experience measure represents a clinical complement to existing Hepatitis C measures currently included in the program. This measure is proposed to be included within the Hepatitis C Measure Group.	AGA / AASLD / PCPI			X			X	
N/A /N/ A	N/A	Communicati on and Care Coordination	**Follow-up After Hospitalization for Mental Illness:** The percentage of discharges for patients 6 years of age and older who were hospitalized for treatment of selected mental illness diagnoses and who had an outpatient visit, an intensive outpatient encounter or partial hospitalization with a mental health practitioner. Two rates are reported:	NCQA			X				

NQF/ PQRS	CMS E-Measure ID	NQS Domain	Measure Title and Description*	Measure Steward	Claims	CSV	Registry	EHR	GPRO (Web Interface)*	Measures Groups	Other Quality Reporting Programs
			- The percentage of discharges for which the patient received follow-up within 30 days of discharge - The percentage of discharges for which the patient received follow-up within 7 days of discharge. **Rationale:** We are proposing this measure based on our exception authority under section 1848(k)(2)(C)(ii) of the Act that provides an exception to the requirement that the Secretary select measures that have been endorsed by the entity with a contract under section 1890(a) of the Act (that is, the NQF). This measure represents a clinical gap in the program. This measure would complement the existing mental health clinical concepts within PQRS.								
N/A /N/ A	N/A	Patient Safety	**HRS-12: Cardiac Tamponade and/or Pericardiocentesis Following Atrial Fibrillation Ablation:** Rate of cardiac tamponade and/or pericardiocentesis following atrial fibrillation ablation. **Rationale:** We are proposing this measure based on our exception authority under section 1848(k)(2)(C)(ii) of the Act that provides an exception to the requirement that the Secretary select measures that have been endorsed by the entity with a contract under section 1890(a) of the Act (that is, the NQF). This measure represents a gap in care for patients who receive device therapy for heart arrythmia. This outcome measure expands upon measures that are available for electrophysiologist to report within PQRS. At this time, PQRS has one other measure, PQRS #348: HRS-3: Implantable Cardioverter Defibrillator (ICD) Complications Rate, reportable within the scope of electrophysiology.	HRS			X				
N/A /N/ A	N/A	Patient Safety	**HRS-9: Infection within 180 Days of Cardiac Implantable Electronic Device (CIED) Implantation, Replacement, or Revision:** Infection rate following CIED device implantation, replacement, or revision. **Rationale:** We are proposing this measure based on our exception authority under section 1848(k)(2)(C)(ii) of the Act that provides an exception to the requirement that the Secretary select measures that have been endorsed by the entity with a contract under section 1890(a) of the Act (that is, the NQF). This measure represents a gap in care for patients who receive device therapy for heart arrythmia. This outcome measure expands upon measures that are available for electrophysiologist to report within PQRS. At this time, PQRS has one other measure, PQRS #348: HRS-3: Implantable Cardioverter Defibrillator (ICD) Complications Rate, reportable within the scope of electrophysiology.	HRS			X				
140 7 /N/	N/A	Community/P opulation Health	**Immunizations for Adolescents:** The percentage of adolescents 13 years of age who had the recommended immunizations by their	NCQA			X				

NQF/ PQRS	CMS E-Measure ID	NQS Domain	Measure Title and Description[¥]	Measure Steward	Claims	CSV	Registry	EHR	GPRO (Web Interface)*	Measures Groups	Other Quality Reporting Programs
A			13th birthday. **Rationale:** This measure satisfies 1848(k)(2)(C)(i) of the Act as this measure is NQF-endorsed. This measure is a process measure that complements existing childhood immunication measures already in the program. This measure would be reportable by Pediatricians, Family Practice physicians, and Internists.								
N/A /N/ A	N/A	Communicati on and Care Coordination	**Lung Cancer Reporting (Biopsy/Cytology Specimens):** Pathology reports based on biopsy and/or cytology specimens with a diagnosis of non small cell lung cancer classified into specific histologic type or classified as NSCLC-NOS with an explanation included in the pathology report. **Rationale:** We are proposing this measure based on our exception authority under section 1848(k)(2)(C)(ii) of the Act that provides an exception to the requirement that the Secretary select measures that have been endorsed by the entity with a contract under section 1890(a) of the Act (that is, the NQF). This measure represents a program gap in measures for the pathology specialty.	CAP	X		X				
N/A /N/ A	N/A	Communicati on and Care Coordination	**Lung Cancer Reporting (Resection Specimens):** Pathology reports based on resection specimens with a diagnosis of primary lung carcinoma that include the pT category, pN category and for non small cell lung cancer, histologic type. **Rationale:** We are proposing this measure based on our exception authority under section 1848 (k)(2)(C)(ii) of the Act that provides an exception to the requirement that the Secretary select measures that have been endorsed by the entity with a contract under section 1890(a) of the Act (that is, the NQF). This measure represents a program gap in measures for the pathology specialty.	CAP	X		X				
662 /N/ A	N/A	Communicati on and Care Coordination	**Median Time to Pain Management for Long Bone Fracture:** Median time from emergency department arrival to time of initial oral or parenteral pain medication administration for emergency department patients with a principal diagnosis of long bone fracture (LBF). **Rationale:** This measure satisfies 1848(k)(2)(C)(i) of the Act as this measure is NQF-endorsed. This outcome measure provides alignment across programs and settings and addresses a clinical gap in the program.	CMS/OFM Q			X				
N/A /N/ A	N/A	Communicati on and Care Coordination	**Melanoma Reporting:** Pathology reports for primary malignant cutaneous melanoma that include the pT category and a statement on thickness and ulceration and for pT1, mitotic rate. **Rationale:** We are proposing this measure based on our exception authority under section 1848(k)(2)(C)(ii) of the Act that provides an	CAP	X		X				

NQF/ PQRS	CMS E-Measure ID	NQS Domain	Measure Title and Description[¥]	Measure Steward	Claims	CSV	Registry	EHR	GPRO (Web Interface)*	Measures Groups	Other Quality Reporting Programs
			exception to the requirement that the Secretary select measures that have been endorsed by the entity with a contract under section 1890(a) of the Act (that is, the NQF). This measure represents a program gap in measures for the pathology specialty.								
N/A /N/ A	N/A	Person and Caregiver-Centered Experience and Outcomes	**Optimal Asthma Care- Control Component:** Patients ages 5-50 (pediatrics ages 5-17) whose asthma is well-controlled as demonstrated by one of three age appropriate patient reported outcome tools. **Rationale:** We are proposing this measure based on our exception authority under section 1848(k)(2)(C)(ii) of the Act that provides an exception to the requirement that the Secretary select measures that have been endorsed by the entity with a contract under section 1890(a) of the Act (that is, the NQF). This patient centered outcome measure will replace PQRS #064 (Asthma: Assessment of Asthma Control-Ambulatory Care Setting) as it represents a more robust clinical outcome for asthma care.	MNCM			X				
N/A /N/ A	N/A	Effective Clinical Care	**Post-procedural Optimal medical therapy Composite (percutaneous coronary intervention):** Percentage of patients aged 18 years and older for whom PCI is performed who are prescribed optimal medical therapy at discharge. **Rationale:** We are proposing this measure based on our exception authority under section 1848(k)(2)(C)(ii) of the Act that provides an exception to the requirement that the Secretary select measures that have been endorsed by the entity with a contract under section 1890(a) of the Act (that is, the NQF). This measure represents a clinical gap in the program for patients with percutaneous coronary intervention (PCI). This is a new clinical concept proposed for reporting within PQRS.	ACC-AHA			X				
N/A /N/ A	N/A	Effective Clinical Care	**Recurrence or amputation following endovascular infrainquinal lower extremity revascularization:** Percentage of patients undergoing endovascular infrainguinal revascularization for non-limb threatening ischemia (claudication or asymptomatic) require repeat ipsilateral revascularization or any amputation within 1 year. **Rationale:** We are proposing this measure based on our exception authority under section 1848(k)(2)(C)(ii) of the Act that provides an exception to the requirement that the Secretary select measures that have been endorsed by the entity with a contract under section 1890(a) of the Act (that is, the NQF). This measure would complement the existing vascular health clinical concepts within PQRS.	SVS			X				
N/A /N/ A	N/A	Effective Clinical Care	**Recurrence or amputation following open infrainquinal lower extremity revascularization:** Percentage of patients undergoing open infrainguinal revascularization for non-limb threatening ischemia (claudication	SVS			X				

NQF/ PQRS	CMS E-Measure ID	NQS Domain	Measure Title and Description*	Measure Steward	Claims	CSV	Registry	EHR	GPRO (Web Interface)*	Measures Groups	Other Quality Reporting Programs
			or asymptomatic) who require ipsilateral repeat revascularization or any amputation within 1 year. **Rationale:** We are proposing this measure based on our exception authority under section 1848(k)(2)(C)(ii) of the Act that provides an exception to the requirement that the Secretary select measures that have been endorsed by the entity with a contract under section 1890(a) of the Act (that is, the NQF). This measure would complement the existing vascular health clinical concepts within PQRS.								
N/A /N/ A	N/A	Community/P opulation Health	**Screening for Hepatitis C Virus (HCV) for Patients at High Risk:** Percentage of patients with one or more of the following: a history of injection drug use, patients who received blood transfusions prior to 1992, OR patients who were born in the years 1945–1965 who received a one-time hepatitis C virus (HCV) antibody test. **Rationale:** We are proposing this measure based on our exception authority under section 1848(k)(2)(C)(ii) of the Act that provides an exception to the requirement that the Secretary select measures that have been endorsed by the entity with a contract under section 1890(a) of the Act (that is, the NQF). This measure is complementary of Hepatitis C measures currently in the program, representing a clinical gap not currently captured.	AGA / AASLD / AMA-PCPI			X				
N/A /N/ A	N/A	Effective Clinical Care	**Screening for Hepatocellular Carcinoma (HCC) in patients with Hepatitis C Cirrhosis:** Percentage of patients aged 18 years and older with a diagnosis of chronic hepatitis C cirrhosis who were screened with either ultrasound, triple-contrast CT or triple-contrast MRI for hepatocellular carcinoma (HCC) at least once within the 12 month reporting period. **Rationale:** We are proposing this measure based on our exception authority under section 1848(k)(2)(C)(ii) of the Act that provides an exception to the requirement that the Secretary select measures that have been endorsed by the entity with a contract under section 1890(a) of the Act (that is, the NQF). This process, screening measure represents a clinical complement to existing Hepatitis C measures currently included in the program. This measure is proposed to be included within the Hepatitis C Measure Group.	AGA / AASLD / AMA-PCPI			X			X	
N/A /N/ A	N/A	Community/P opulation Health	**Tobacco Use and Help with Quitting Among Adolescents:** Percentage of adolescents 13 to 20 years of age with a primary care visit during the measurement period for whom tobacco use status was documented and received help quitting if identified as a tobacco user. **Rationale:** We are proposing this measure based on our exception authority under section 1848(k)(2)(C)(ii) of the Act that provides an exception to the requirement that the Secretary select measures that have been endorsed by the	NCQA / NCIQM			X			X	

NQF/ PQRS	CMS E-Measure ID	NQS Domain	Measure Title and Description¥	Measure Steward	Claims	CSV	Registry	EHR	GPRO (Web Interface)*	Measures Groups	Other Quality Reporting Programs
			entity with a contract under section 1890(a) of the Act (that is, the NQF). This measure represents a clinical gap in the program, targeting support of adolescent populations in quitting smoking. This preventive measure supports pediatric patients and is reportable by Pediatricians, Family Practice physicians, and Internists. This is also a cross cutting measure.								

¥ Measure details including titles, descriptions and measure owner information may vary during a particular program year. This is due to the timing of measure specification preparation and the measure versions used by the various reporting options/methods. Please refer to the measure specifications that apply for each of the reporting options/methods for specific measure details.

In Table 23, we specify the measures for which we are proposing a NQS domain change for reporting under the PQRS. Please note the rationale we have for each measure for which we are proposing a NQS domain change below.

TABLE 23: Proposed NQS Domain Changes for Individual Quality Measures and Those Included in Measures Groups for the PQRS Beginning in 2015

NQF/ PQRS	CMS E-Measure ID	NQS Domain 2014	NQS Domain 2015	Measure Title and Description	Claims	CSV	Registry	EHR	GPRO (Web Interface)*	Measures Groups	Other Quality Reporting Programs
0097/046	N/A	Patient Safety	Communication and Care Coordination	**Medication Reconciliation:** Percentage of patients aged 65 years and older discharged from any inpatient facility (e.g. hospital, skilled nursing facility, or rehabilitation facility) and seen within 30 days following discharge in the office by the physician, prescribing practitioner, registered nurse, or clinical pharmacist providing on-going care who had a reconciliation of the discharge medications with the current medication list in the outpatient medical record documented **Rationale:** CMS is recategorizing this measure from the patient safety domain to the communication and care coordination domain in accordance with NQS priorities which follow the General Rules for Categorizing Measures in the HHS Decision Rule for Categorizing Measures. According to the HHS guidelines for categorizing measures, this measure ensures that the key information needed to make clinical decisions is deliberatley organized in a conscious effort and available to patients and providers.			X				
0650/137	N/A	Effective Clinical Care	Communication and Care Coordination	**Melanoma: Continuity of Care – Recall System:** Percentage of patients, regardless of age, with a current diagnosis of melanoma or a history of melanoma whose information was entered, at least once within a 12 month period, into a recall system that includes: • A target date for the next complete physical skin exam, AND • A process to follow up with patients who either did not make an appointment within the specified timeframe or who missed a scheduled appointment **Rationale:** CMS is recategorizing this measure from the effective clinical care domain to the communication and care coordination domain in accordance with NQS priorities which follow the General Rules for Categorizing Measures in the HHS Decision Rule for Categorizing Measures. According to the HHS guidelines for categorizing measures, this measure constitutes the deliberate organization of patient care activities to facilitate appropriate delivery of health care services.			X				
N/A/288	N/A	Effective Clinical Care	Communication and Care Coordination	**Dementia: Caregiver Education and Support:** Percentage of patients, regardless of age, with a diagnosis of dementia whose caregiver(s) were provided with education on dementia disease management and health behavior changes AND referred to additional sources for support within a 12 month period **Rationale:** CMS is recategorizing this measure from the effective clinical care domain to the communication and care coordination domain in accordance with NQS priorities which follow the General Rules for Categorizing Measures in the HHS Decision Rule for Categorizing Measures. According to the HHS guidelines for categorizing measures, this measure ensures that the key information needed to make clinical decisions is deliberatley organized in a conscious effort and is available to patients and their caregivers.						X	
N/A/2	N/A	Effective Clinical	Communication and	**Parkinson's Disease: Rehabilitative Therapy Options:** All patients with a diagnosis of Parkinson's disease (or						X	

NQF/ PQRS	CMS E-Measure ID	NQS Domain 2014	NQS Domain 2015	Measure Title and Description	Claims	CSV	Registry	EHR	GPRO (Web Interface)*	Measures Groups	Other Quality Reporting Programs
93		Care	Care Coordination	caregiver(s), as appropriate) who had rehabilitative therapy options (e.g., physical, occupational, or speech therapy) discussed at least annually **Rationale:** CMS is recategorizing this measure from the effective clinical care domain to the communication and care coordination domain in accordance with NQS priorities which follow the General Rules for Categorizing Measures in the HHS Decision Rule for Categorizing Measures. According to the HHS guidelines for categorizing measures, this measure ensures that the key information needed to make clinical decisions is deliberatley organized in a conscious effort and is available to patients and their caregivers.							
N/A/294	N/A	Effective Clinical Care	Communication and Care Coordination	**Parkinson's Disease: Parkinson's Disease Medical and Surgical Treatment Options Reviewed:** All patients with a diagnosis of Parkinson's disease (or caregiver(s), as appropriate) who had the Parkinson's disease treatment options (e.g., non-pharmacological treatment, pharmacological treatment, or surgical treatment) reviewed at least once annually **Rationale:** CMS is recategorizing this measure from the effective clinical care domain to the communication and care coordination domain in accordance with NQS priorities which follow the General Rules for Categorizing Measures in the HHS Decision Rule for Categorizing Measures. According to the HHS guidelines for categorizing measures, this measure ensures that the key information needed to make clinical decisions is deliberatley organized in a conscious effort and is available to patients and their caregivers.						X	
N/A/325	N/A	Effective Clinical Care	Communication and Care Coordination	**Adult Major Depressive Disorder (MDD): Coordination of Care of Patients with Specific Comorbid Conditions:** Percentage of medical records of patients aged 18 years and older with a diagnosis of major depressive disorder (MDD) and a specific diagnosed comorbid condition (diabetes, coronary artery disease, ischemic stroke, intracranial hemorrhage, chronic kidney disease [stages 4 or 5], End Stage Renal Disease [ESRD] or congestive heart failure) being treated by another clinician with communication to the clinician treating the comorbid condition **Rationale:** CMS is recategorizing this measure from the effective clinical care domain to the communication and care coordination domain in accordance with NQS priorities which follow the General Rules for Categorizing Measures in the HHS Decision Rule for Categorizing Measures. According to the HHS guidelines for categorizing measures, this measure ensures that the key information needed to make clinical decisions is deliberately organized in a conscious effort and is available to patients and providers as well as communicated between health care providers.			X				
N/A/356	N/A	Effective Clinical Care	Communication and Care Coordination	**Unplanned Hospital Readmission within 30 Days of Principal Procedure:** Percentage of patients aged 18 years and older who had an unplanned hospital readmission within 30 days of principal procedure **Rationale:** CMS is recategorizing this measure from the effective clinical care domain to the communication and care coordination domain in accordance with NQS priorities which follow the General Rules for Categorizing Measures in the HHS Decision Rule for Categorizing Measures. According to the HHS guidelines for categorizing measures, this measure						X	

NQF/ PQRS	CMS E-Measure ID	NQS Domain 2014	NQS Domain 2015	Measure Title and Description	Claims	CSV	Registry	EHR	GPRO (Web Interface)*	Measures Groups	Other Quality Reporting Programs
				constitutes the deliberate organization of patient care activities to facilitate appropriate delivery of health care services and outcomes that primarily reflect successful care coordination.							
N/A/303	N/A	Effective Clinical Care	Person and Caregiver-Centered Experience and Outcomes	**Cataracts: Improvement in Patient's Visual Function within 90 Days Following Cataract Surgery:** Percentage of patients aged 18 years and older in sample who had cataract surgery and had improvement in visual function achieved within 90 days following the cataract surgery, based on completing a pre-operative and post-operative visual function survey **Rationale:** CMS is recategorizing this measure from the effective clinical care domain to the person and caregiver-centered experience and outcomes domain in accordance with NQS priorities which follow the General Rules for Categorizing Measures in the HHS Decision Rule for Categorizing Measures. According to the HHS guidelines for categorizing measures, this measure encompases the inclusion of patient or family-reported experiences (outcomes) as members of the health care team in a collaborative partnerships with providers.			X			X	
N/A/331	N/A	Effective Clinical Care	Efficiency and Cost Reduction	**Adult Sinusitis: Antibiotic Prescribed for Acute Sinusitis (Appropriate Use):** Percentage of patients, aged 18 years and older, with a diagnosis of acute sinusitis who were prescribed an antibiotic within 7 days of diagnosis or within 10 days after onset of symptoms **Rationale:** CMS is recategorizing this measure from the effective clinical care domain to the efficiency and cost reduction domain in accordance with NQS priorities which follow the General Rules for Categorizing Measures in the HHS Decision Rule for Categorizing Measures. According to the HHS guidelines for categorizing measures, this measure reflects the efficient use of health care services in the provision of patient care.			X			X	
N/A/332	N/A	Effective Clinical Care	Efficiency and Cost Reduction	**Adult Sinusitis: Appropriate Choice of Antibiotic: Amoxicillin Prescribed for Patients with Acute Bacterial Sinusitis:** Percentage of patients aged 18 years and older with a diagnosis of acute bacterial sinusitis that were prescribed amoxicillin, without clavulante, as a first line antibiotic at the time of diagnosis **Rationale:** CMS is recategorizing this measure from the effective clinical care domain to the efficiency and cost reduction domain in accordance with NQS priorities which follow the General Rules for Categorizing Measures in the HHS Decision Rule for Categorizing Measures. According to the HHS guidelines for categorizing measures, this measure reflects the efficient use of health care services in the provision of patient care.			X			X	
N/A/347	N/A	Effective Clinical Care	Patient Safety	**Rate of Endovascular Aneurysm Repair (EVAR) of Small or Moderate Non-Ruptured Abdominal Aortic Aneurysms (AAA) Who Die While in Hospital:** Percent of patients undergoing endovascular repair of small or moderate abdominal aortic aneurysms (AAA) who die while in the hospital **Rationale:** CMS is recategorizing this measure from the effective clinical care domain to the patient safety domain in accordance with NQS priorities which follow the General Rules for Categorizing Measures in the HHS Decision Rule for Categorizing Measures. According to the HHS guidelines			X				

NQF/ PQRS	CMS E-Measure ID	NQS Domain 2014	NQS Domain 2015	Measure Title and Description	Claims	CSV	Registry	EHR	GPRO (Web Interface)*	Measures Groups	Other Quality Reporting Programs
				for categorizing measures, this measure reflects an effort to reduce risk in the delivery of health care to patients and the occurance of a health outcome that results from the absence of appropriate structures or processed.							
N/A/348	N/A	Effective Clinical Care	Patient Safety	**HRS-3: Implantable Cardioverter-Defibrillator (ICD) Complications Rate:** Patients with physician-specific risk-standardized rates of procedural complications following the first time implantation of an ICD **Rationale:** CMS is recategorizing this measure from the effective clinical care domain to the patient safety domain in accordance with NQS priorities which follow the General Rules for Categorizing Measures in the HHS Decision Rule for Categorizing Measures. According to the HHS guidelines for categorizing measures, this measure reflects an effort to reduce risk in the delivery of health care to patients and the occurance of a health outcome that results from the absence of appropriate structures or processed.			X				
N/A/354	N/A	Effective Clinical Care	Patient Safety	**Anastomotic Leak Intervention:** Percentage of patients aged 18 years and older who required an anastomotic leak intervention following gastric bypass or colectomy surgery **Rationale:** CMS is recategorizing this measure from the effective clinical care domain to the patient safety domain in accordance with NQS priorities which follow the General Rules for Categorizing Measures in the HHS Decision Rule for Categorizing Measures. According to the HHS guidelines for categorizing measures, this measure reflects an effort to reduce risk in the delivery of health care to patients and the occurance of a health outcome that results from the absence of appropriate structures or processed.						X	
N/A/355	N/A	Effective Clinical Care	Patient Safety	**Unplanned Reoperation within the 30 Day Postoperative Period:** Percentage of patients aged 18 years and older who had any unplanned reoperation within the 30 day postoperative period **Rationale:** CMS is recategorizing this measure from the effective clinical care domain to the patient safety domain in accordance with NQS priorities which follow the General Rules for Categorizing Measures in the HHS Decision Rule for Categorizing Measures. According to the HHS guidelines for categorizing measures, this measure reflects an effort to reduce risk in the delivery of health care to patients and the occurance of a health outcome that results from the absence of appropriate structures or processed.						X	
0043/111	127 v2	Effective Clinical Care	Community/Population Health	**Pneumonia Vaccination Status for Older Adults:** Percentage of patients 65 years of age and older who have ever received a pneumococcal vaccine. **Rationale:** CMS is recategorizing this measure from the effective clinical care domain to the community/ population health domain in accordance with NQS priorities which follow the General Rules for Categorizing Measures in the HHS Decision Rule for Categorizing Measures. According to the HHS guidelines for categorizing measures, this measure is a measurement of process focused on the prevention of and screening for disease.	X		X	X	X	X	ACO MU2
0321/082	N/A	Communication and Care Coordination	Effective Clinical Care	**Adult Kidney Disease: Peritoneal Dialysis Adequacy: Solute:** Percentage of patients aged 18 years and older with a diagnosis of End Stage Renal Disease (ESRD) receiving peritoneal dialysis who have a total Kt/V ≥ 1.7 per week measured once every 4 months			X				

NQF/ PQRS	CMS E-Measure ID	NQS Domain 2014	NQS Domain 2015	Measure Title and Description	Claims	CSV	Registry	EHR	GPRO (Web Interface)*	Measures Groups	Other Quality Reporting Programs
				Rationale: CMS is recategorizing this measure from the communication and care coordination domain to the effective clinical care domain in accordance with NQS priorities which follow the General Rules for Categorizing Measures in the HHS Decision Rule for Categorizing Measures. According to the HHS guidelines for categorizing measures, this measure reflects care that is consistent with systematically acquired evidence to determine whether an intervention, diagnostic test, or therapy produces better outcomes than alternatives.							
N/A/180	N/A	Communication and Care Coordination	Effective Clinical Care	**Rheumatoid Arthritis (RA): Glucocorticoid Management**: Percentage of patients aged 18 years and older with a diagnosis of rheumatoid arthritis (RA) who have been assessed for glucocorticoid use and, for those on prolonged doses of prednisone ≥ 10 mg daily (or equivalent) with improvement or no change in disease activity, documentation of glucocorticoid management plan within 12 months **Rationale:** CMS is recategorizing this measure from the communication and care coordination domain to the effective clinical care domain in accordance with NQS priorities which follow the General Rules for Categorizing Measures in the HHS Decision Rule for Categorizing Measures. According to the HHS guidelines for categorizing measures, this measure reflects care that is consistent with systematically acquired evidence to determine whether an intervention, diagnostic test, or therapy produces better outcomes than alternatives.						X	AQA
N/A/280	N/A	Communication and Care Coordination	Effective Clinical Care	**Dementia: Staging of Dementia:** Percentage of patients, regardless of age, with a diagnosis of dementia whose severity of dementia was classified as mild, moderate or severe at least once within a 12 month period **Rationale:** CMS is recategorizing this measure from the communication and care coordination domain to the effective clinical care domain in accordance with NQS priorities which follow the General Rules for Categorizing Measures in the HHS Decision Rule for Categorizing Measures. According to the HHS guidelines for categorizing measures, this measure reflects care that is consistent with systematically acquired evidence to determine whether an intervention, diagnostic test, or therapy produces better outcomes than alternatives.						X	
0654/093	N/A	Communication and Care Coordination	Efficiency and Cost Reduction	**Acute Otitis Externa (AOE): Systemic Antimicrobial Therapy – Avoidance of Inappropriate** Use: Percentage of patients aged 2 years and older with a diagnosis of AOE who were not prescribed systemic antimicrobial therapy **Rationale:** CMS is recategorizing this measure from the communication and care coordination domain to the efficiency and cost reduction domain in accordance with NQS priorities which follow the General Rules for Categorizing Measures in the HHS Decision Rule for Categorizing Measures. According to the HHS guidelines for categorizing measures, this measure reflects the efficient use of health care services in the provision of patient care.	X		X				
N/A/258	N/A	Communication and Care Coordination	Patient Safety	**Rate of Open Repair of Small or Moderate Non-Ruptured Abdominal Aortic Aneurysms (AAA) without Major Complications (Discharged to Home by Post-Operative Day #7):** Percent of patients undergoing open repair of small or moderate sized non-ruptured abdominal aortic aneurysms who do not experience a major complication (discharge to home no later than post-operative day #7)			X				

NQF/ PQRS	CMS E-Measure ID	NQS Domain 2014	NQS Domain 2015	Measure Title and Description	Claims	CSV	Registry	EHR	GPRO (Web Interface)*	Measures Groups	Other Quality Reporting Programs
				Rationale: CMS is recategorizing this measure from the communication and care coordination domain to the patient safety domain in accordance with NQS priorities which follow the General Rules for Categorizing Measures in the HHS Decision Rule for Categorizing Measures. According to the HHS guidelines for categorizing measures, this measure reflects an effort to reduce risk in the delivery of health care to patients and the occurance of a health outcome that results from the absence of appropriate structures or processed.							
N/A/259	N/A	Communication and Care Coordination	Patient Safety	**Rate of Endovascular Aneurysm Repair (EVAR) of Small or Moderate Non-Ruptured Abdominal Aortic Aneurysms (AAA) without Major Complications (Discharged to Home by Post-Operative Day #2):** Percent of patients undergoing endovascular repair of small or moderate non-ruptured abdominal aortic aneurysms (AAA) that do not experience a major complication (discharged to home no later than post-operative day #2) **Rationale:** CMS is recategorizing this measure from the communication and care coordination domain to the patient safety domain in accordance with NQS priorities which follow the General Rules for Categorizing Measures in the HHS Decision Rule for Categorizing Measures. According to the HHS guidelines for categorizing measures, this measure reflects an effort to reduce risk in the delivery of health care to patients and the occurrence of a health outcome that results from the absence of appropriate structures or processed.			X				
N/A/260	N/A	Communication and Care Coordination	Patient Safety	**Rate of Carotid Endarterectomy (CEA) for Asymptomatic Patients, without Major Complications (Discharged to Home by Post-Operative Day #2):** Percent of asymptomatic patients undergoing CEA who are discharged to home no later than post-operative day #2 **Rationale:** CMS is recategorizing this measure from the communication and care coordination domain to the patient safety domain in accordance with NQS priorities which follow the General Rules for Categorizing Measures in the HHS Decision Rule for Categorizing Measures. According to the HHS guidelines for categorizing measures, this measure reflects an effort to reduce risk in the delivery of health care to patients and the occurance of a health outcome that results from the absence of appropriate structures or processed.			X				
1525/326	N/A	Patient Safety	Effective Clinical Care	**Atrial Fibrillation and Atrial Flutter: Chronic Anticoagulation Therapy:** Percentage of patients aged 18 years and older with a diagnosis of nonvalvular atrial fibrillation (AF) or atrial flutter whose assessment of the specified thromboembolic risk factors indicate one or more high-risk factors or more than one moderate risk factor, as determined by CHADS2 risk stratification, who are prescribed warfarin OR another oral anticoagulant drug that is FDA approved for the prevention of thromboembolism **Rationale:** CMS is recategorizing this measure from the communication and care coordination domain to the patient safety domain in accordance with NQS priorities which follow the General Rules for Categorizing Measures in the HHS Decision Rule for Categorizing Measures. According to the HHS guidelines for categorizing measures, this measure reflects care that is consistent with systematically acquired evidence to determine whether an intervention, diagnostic test, or therapy produces better outcomes than alternatives.			X				

NQF/ PQRS	CMS E-Measure ID	NQS Domain 2014	NQS Domain 2015	Measure Title and Description	Claims	CSV	Registry	EHR	GPRO (Web Interface)*	Measures Groups	Other Quality Reporting Programs
N/A/321	N/A	Communication and Care Coordination	Person and Caregiver Experience and Outcomes	**CAHPS for PQRS Clinician/Group Survey:** • Getting timely care, appointments,and information; • How well providers Communicate; • Patient's Rating of Provider; • Access to Specialists; • Health Promotion & Education; • Shared Decision Making; • Health Status/Functional Status; • Courteous and Helpful Office Staff; • Care Coordination; • Between Visit Communication; • Helping Your to Take Medication as Directed; and • Stewardship of Patient Resources **Rationale:** CMS is recategorizing this measure from the communication and care coordination domain to the person and caregiver experience and outcomes domain in accordance with NQS priorities which follow the General Rules for Categorizing Measures in the HHS Decision Rule for Categorizing Measures. According to the HHS guidelines for categorizing measures, this measure encompases the inclusion of patient or family-reported experiences (outcomes) as members of the health care team in a collaborative partnerships with providers.		X					ACO

¥ Measure details including titles, descriptions and measure owner information may vary during a particular program year. This is due to the timing of measure specification preparation and the measure versions used by the various reporting options/methods. Please refer to the measure specifications that apply for each of the reporting options/methods for specific measure details.

In Table 24, we specify the measures we are proposing to remove from reporting under the PQRS. Please note that the rationale we have for each measure we are proposing to remove is specified after the measure title and description.

TABLE 24: Measures Proposed for Removal from the Existing PQRS Measure Set Beginning in 2015

NQF/ PQRS	NQS Domain	Measure Title and Description[¥]	Measure Steward	Claims	CSV	Registry	EHR	GPRO (Web Interface)*	Measures Groups	Other Quality Reporting Programs
0093 /055	Effective Clinical Care	**Emergency Medicine: 12-Lead Electrocardiogram (ECG) Performed for Syncope:** Percentage of patients aged 60 years and older with an emergency department discharge diagnosis of syncope who had a 12-lead electrocardiogram (ECG) performed **Rationale:** CMS recommends removal due to eligible professionals consistently meeting performance on this measure with performance rates close to 100% suggesting there is no gap in care.	AMA-PCPI /NCQA	X		X				
0232 /056	Effective Clinical Care	**Emergency Medicine: Community-Acquired Bacterial Pneumonia (CAP): Vital Signs:** Percentage of patients aged 18 years and older with a diagnosis of community-acquired bacterial pneumonia (CAP) with vital signs documented and reviewed **Rationale:** CMS recommends removal due to eligible professionals are consistently meeting performance on this measure with performance rates close to 100% suggesting there is no gap in care.	AMA-PCPI /NCQA	X		X				
0096 /059	Effective Clinical Care	**Emergency Medicine: Community-Acquired Bacterial Pneumonia (CAP): Empiric Antibiotic:** Percentage of patients aged 18 years and older with a diagnosis of community-acquired bacterial pneumonia (CAP) with an appropriate empiric antibiotic prescribed **Rationale:** CMS recommends removal due to eligible professionals are consistently meeting performance on this measure with performance rates close to 100% suggesting there is no gap in care.	AMA-PCPI /NCQA	X		X				
N/A /228	Effective Clinical Care	**Heart Failure (HF): Left Ventricular Function (LVF) Testing:** Percentage of patients 18 years and older with Left Ventricular Function (LVF) testing documented as being performed within the previous 12 months or LVF testing performed prior to discharge for patients who are hospitalized with a principal diagnosis of Heart Failure (HF) during the reporting period **Rationale:** CMS recommends removal due to this measure representing a clinical concept that does not add clinical value to PQRS. LVF testing is a basic assessment for patients with heart failure. Furthermore, the MAP strongly recommends removal of this measure as these types of process measures do not meaningfully contribute to improved outcomes based on a body of literature that demonstrates that lack of association.	CMS/QIP			X				
AQA Adopted /245	Effective Clinical Care	**Chronic Wound Care: Use of Wound Surface Culture Technique in Patients with Chronic Skin Ulcers (Overuse Measure:** Percentage of	AMA-PCPI /NCQA	X		X				

NQF/ PQRS	NQS Domain	Measure Title and Description[¥]	Measure Steward	Claims	CSV	Registry	EHR	GPRO (Web Interface)*	Measures Groups	Other Quality Reporting Programs
		patient visits for those patients aged 18 years and older with a diagnosis of chronic skin ulcer without the use of a wound surface culture technique **Rationale:** CMS recommends removal due to eligible professionals are consistently meeting performance on this measure with performance rates close to 100% suggesting there is no gap in care.								
AQA Adopted /246	Effective Clinical Care	**Chronic Wound Care: Use of Wet to Dry Dressings in Patients with Chronic Skin Ulcers (Overuse Measure):** Percentage of patient visits for those patients aged 18 years and older with a diagnosis of chronic skin ulcer without a prescription or recommendation to use wet to dry dressings **Rationale:** CMS recommends removal due to eligible professionals are consistently meeting performance on this measure with performance rates close to 100% suggesting there is no gap in care.	AMA-PCPI /NCQA	X		X				
N/A /266	Effective Clinical Care	**Epilepsy: Seizure Type(s) and Current Seizure Frequency(ies):** Percentage of patient visits with a diagnosis of epilepsy who had the type(s) of seizure(s) and current seizure frequency(ies) for each seizure type documented in the medical record **Rationale:** CMS recommends removal due to eligible professionals are consistently meeting performance on this measure with performance rates close to 100% suggesting there is no gap in care.	AAN	X		X				
N/A295	Effective Clinical Care	**Hypertension: Use of Aspirin or Other Antithrombotic Therapy:** Percentage of patients aged 30 through 90 years old with a diagnosis of hypertension and are eligible for aspirin or other antithrombotic therapy who were prescribed aspirin or other antithrombotic therapy. **Rationale**: CMS recommends removal due to the measure steward indicating they will no longer maintain this measure.	ABIM						X	
N/A297	Effective Clinical Care	**Hypertension: Urine Protein Test:** Percentage of patients aged 18 through 90 years old with a diagnosis of hypertension who either have chronic kidney disease diagnosis documented or had a urine protein test done within 36 months. **Rationale**: CMS recommends removal due tothe measure steward indicating they will no longer maintain this measure. In addition, this is a process measure that is distal to the outcome and has not been shown to improve patient outcomes.. Furthermore, MAP strongly recommends removal as these types of process measures do not meaningfully contribute to improved outcomes.	ABIM						X	
N/A298	Effective Clinical Care	**Hypertension: Annual Serum Creatinine Test:** Percentage of patients aged 18 through 90 years old with a diagnosis of hypertension who had a serum creatinine test done within 12 months.	ABIM						X	

NQF/ PQRS	NQS Domain	Measure Title and Description[¥]	Measure Steward	Claims	CSV	Registry	EHR	GPRO (Web Interface)*	Measures Groups	Other Quality Reporting Programs
		Rationale: CMS recommends removal due to the measure steward indicating they will no longer maintain this measure.								
N/A299	Effective Clinical Care	**Hypertension: Diabetes Mellitus Screening Test:** Percentage of patients aged 18 through 90 years old with a diagnosis of hypertension who had a diabetes screening test within 36 months. **Rationale**: CMS recommends removal due to the measure steward indicating they will no longer maintain this measure.	ABIM						X	
N/A300	Effective Clinical Care	**Hypertension: Blood Pressure Control:** Percentage of patients aged 18 through 90 years old with a diagnosis of hypertension whose most recent blood pressure was under control (< 140/90 mmHg). **Rationale**: CMS recommends removal due to the measure steward indicating they will no longer maintain this measure.	ABIM						X	
N/A302	Effective Clinical Care	**Hypertension: Dietary and Physical Activity Modifications Appropriately Prescribed:** Percentage of patients aged 18 through 90 years old with a diagnosis of hypertension who received dietary and physical activity counseling at least once within 12 months. **Rationale**: CMS recommends removal due to the measure steward indicating they will no longer maintain this measure.	ABIM						X	
0087/0014	Effective Clinical Care	**Age-Related Macular Degeneration (AMD): Dilated Macular Examination:** Percentage of patients aged 50 years and older with a diagnosis of age-related macular degeneration (AMD) who had a dilated macular examination performed which included documentation of the presence or absence of macular thickening or hemorrhage AND the level of macular degeneration severity during one or more office visits within 12 months **Rationale:** CMS recommends removal due to eligible professionals consistently meeting performance on this measure with performance rates close to 100% suggesting there is no gap in care.	AMA-PCPI NCQA	X		X				
0270/0020	Patient Safety	**Perioperative Care: Timing of Prophylactic Parenteral Antibiotic – Ordering Physician:** Percentage of surgical patients aged 18 years and older undergoing procedures with the indications for prophylactic parenteral antibiotics, who have an order for prophylactic parenteral antibiotic to be given within one hour (if fluoroquinolone or vancomycin, 2 hours), prior to the surgical incision (or start of procedure when no incision is required) **Rationale:** CMS recommends removal due to eligible professionals consistently meeting performance on this measure with performance rates close to 100% suggesting there is no gap in care.	AMA-PCPI NCQA	X		X			X	
0268/0021	Patient Safety	**Perioperative Care: Selection of Prophylactic Antibiotic – First OR Second Generation Cephalosporin:** Percentage of surgical patients	AMA-PCPI NCQA	X		X			X	

NQF/ PQRS	NQS Domain	Measure Title and Description[¥]	Measure Steward	Claims	CSV	Registry	EHR	GPRO (Web Interface)*	Measures Groups	Other Quality Reporting Programs
		aged 18 years and older undergoing procedures with the indications for a first OR second generation cephalosporin prophylactic antibiotic, who had an order for a first OR second generation cephalosporin for antimicrobial prophylaxis **Rationale:** CMS recommends removal due to eligible professionals consistently meeting performance on this measure with performance rates close to 100% suggesting there is no gap in care.								
0271/0022	Patient Safety	**Perioperative Care: Discontinuation of Prophylactic Parenteral Antibiotics (Non-Cardiac Procedures):** Percentage of non-cardiac surgical patients aged 18 years and older undergoing procedures with the indications for prophylactic parenteral antibiotics AND who received a prophylactic parenteral antibiotic, who have an order for discontinuation of prophylactic parenteral antibiotics within 24 hours of surgical end time **Rationale:** CMS recommends removal due to eligible professionals consistently meeting performance on this measure with performance rates close to 100% suggesting there is no gap in care.	AMA-PCPI NCQA	X		X			X	
0239/0023	Patient Safety	**Perioperative Care: Venous Thromboembolism (VTE) Prophylaxis (When Indicated in ALL Patients):** Percentage of surgical patients aged 18 years and older undergoing procedures for which VTE prophylaxis is indicated in all patients, who had an order for Low Molecular Weight Heparin (LMWH), Low-Dose Unfractionated Heparin (LDUH), adjusted-dose warfarin, fondaparinux or mechanical prophylaxis to be given within 24 hours prior to incision time or within 24 hours after surgery end time **Rationale:** CMS recommends removal due to eligible professionals consistently meeting performance on this measure with performance rates close to 100% suggesting there is no gap in care.	AMA-PCPI NCQA	X		X			X	
0092/0028	Effective Clinical Care	**Aspirin at Arrival for Acute Myocardial Infarction (AMI):** Percentage of patients, regardless of age, with an emergency department discharge diagnosis of acute myocardial infarction (AMI)who had documentation of receiving aspirin within 24 hours before emergency department arrival or during emergency department stay **Rationale:** CMS recommends removal due to this measure representing a clinical concept that has been substantially adopted for initial treatment of patients suffering from acute myocardial infarction when clinically indicated.	AMA-PCPI NCQA	X		X				
0269/0030	Patient Safety	**Perioperative Care:Timing of Prophylactic Antiobiotic—Administering Physician:** Percentage of surgical patients aged 18 years and older who receive an anesthetic when undergoing procedures with the indications for prophylactic	AMA-PCPI NCQA	X		X				

NQF/ PQRS	NQS Domain	Measure Title and Description[¥]	Measure Steward	Claims	CSV	Registry	EHR	GPRO (Web Interface)*	Measures Groups	Other Quality Reporting Programs
		parenteral antibiotics for whom administration of a prophylactic parenteral antibiotic ordered has been initiated within 1 hour (if fluoroquinolone or vancomycin, 2 hours) prior to the surgical incision (or start of procedure when no incision is required) **Rationale:** CMS recommends removal due to eligible professionals consistently meeting performance on this measure with performance rates close to 100% suggesting there is no gap in care.								
0240/0031	Effective Clinical Care	**Stroke and Stroke Rehabilitation: Venous Thromboembolism (VTE) Prophylaxis for Ischemic Stroke or Intracranial Hemorrhage:** Percentage of patients aged 18 years and older with a diagnosis of ischemic stroke or intracranial hemorrhage who were administered venous thromboembolism (VTE) prophylaxis the day of or the day after hospital admission **Rationale:** CMS recommends removal due to this measure representing a clinical concept that is currently included within inpatient standards of care to improve patient outcomes for those diagnosed with ischemic or intracranial stroke when clincially indicated.	AMA-PCPI NCQA	X		X				
0325/0032	Effective Clinical Care	**Stroke and Stroke Rehabilitation: Discharged on Antithrombotic Therapy:** Percentage of patients aged 18 years and older with a diagnosis of ischemic stroke or transient ischemic attack (TIA) who were prescribed antithrombotic therapy at discharge **Rationale:** CMS recommends removal due to this measure representing a clinical concept that is currently included within inpatient standard of care to decrease risk of complications in patients diagnosed with ischemic or intracranial stroke when clinically indicated.	AMA-PCPI NCQA	X		X				
0241/0033	Effective Clinical Care	**Stroke and Stroke Rehabilitation: Anticoagulant Therapy Prescribed for Atrial Fibrillation (AF) at Discharge:** Percentage of patients aged 18 years and older with a diagnosis of ischemic stroke or transient ischemic attack (TIA) with documented permanent, persistent, or paroxysmal atrial fibrillation who were prescribed an anticoagulant at discharge **Rationale:** CMS recommends removal due to this measure representing a clinical concept that is currently included within inpatient standard of care to decrease risk of complications in patients diagnosed with ischemic or intracranial stroke when clinically indicated.	AMA-PCPI NCQA			X				
0243/0035	Effective Clinical Care	**Stroke and Stroke Rehabilitation: Screening for Dysphagia:** Percentage of patients aged 18 years and older with a diagnosis of ischemic stroke or intracranial hemorrhage who receive any food, fluids or medication by mouth (PO) for whom a dysphagia screening was performed prior to PO intake in accordance with a dysphagia screening tool approved by the institution in which the patient is receiving care	AMA-PCPI NCQA	X		X				

NQF/ PQRS	NQS Domain	Measure Title and Description[¥]	Measure Steward	Claims	CSV	Registry	EHR	GPRO (Web Interface)*	Measures Groups	Other Quality Reporting Programs
		Rationale: CMS recommends removal due to this measure representing a clinical concept that is currently included within hospital standard of care to decrease risk of choking for patients diagnosed with ischemic or intracranial stroke when clinically indicated.								
0244/0036	Effective Clinical Care	**Stroke and Stroke Rehabilitation: Rehabilitation Services Ordered:** Percentage of patients aged 18 years and older with a diagnosis of ischemic stroke or intracranial hemorrhage for whom occupational, physical, or speech rehabilitation services were ordered at or prior to inpatient discharge OR documentation that no rehabilitation services are indicated at or prior to inpatient discharge **Rationale:** CMS recommends removal due to this measure representing a clinical concept that is currently included within inpatient standard of care to improve quality of life for patients diagnosed with ischemic or intracranial stroke when clinically indicated.	AMA-PCPI NCQA	X		X				
0637/0045	Patient Safety	**Perioperative Care: Discontinuation of Prophylactic Parenteral Antibiotics (Cardiac Procedures):** Percentage of cardiac surgical patients aged 18 years and older undergoing procedures with the indications for prophylactic parenteral antibiotics AND who received a prophylactic parenteral antibiotic, who have an order for discontinuation of prophylactic parenteral antibiotics within 48 hours of surgical end time **Rationale:** CMS recommends removal due to eligible professionals are consistently meeting performance on this measure with performance rates close to 100% suggesting there is no gap in care.	AMA-PCPI NCQA	X		X				
0099/0049	Effective Clinical Care	**Urinary Incontinence: Characterization of Urinary Incontinence in Women Aged 65 Years and Older:** Percentage of female patients aged 65 years and older with a diagnosis of urinary incontinence whose urinary incontinence was characterized at least once within 12 months **Rationale:** CMS recommends removal due to eligible professionals are consistently meeting performance on this measure with performance rates close to 100% suggesting there is no gap in care.	AMA-PCPI NCQA	X		X				
0001/0064	Effective Clinical Care	**Asthma: Assessment of Asthma Control – Ambulatory Care Setting:** Percentage of patients aged 5 through 64 years with a diagnosis of asthma who were evaluated at least once during the measurement period for asthma control (comprising asthma impairment and asthma risk) **Rationale:** CMS recommends removal due to this measure representing a clinical concept that does not add clinical value to PQRS because in order to provide effective treatment for asthma assessment of asthma control is essential.	AMA-PCPI NCQA			X			X	
0393/0083	Effective	**Hepatitis C: Confirmation of Hepatitis C**	AMA-PCPI			X				

NQF/ PQRS	NQS Domain	Measure Title and Description[¥]	Measure Steward	Claims	CSV	Registry	EHR	GPRO (Web Interface)*	Measures Groups	Other Quality Reporting Programs
	Clinical Care	**Viremia:** Percentage of patients aged 18 years and older who are hepatitis C antibody positive seen for an initial evaluation for whom hepatitis C virus (HCV) RNA testing was ordered or previously performed **Rationale:** CMS recommends removal due to eligible professionals are consistently meeting performance on this measure with performance rates close to 100% suggesting there is no gap in care.								
0103/0106	Effective Clinical Care	**Adult Major Depressive Disorder (MDD): Comprehensive Depression Evaluation: Diagnosis and Severity:** Percentage of patients aged 18 years and older with a new diagnosis or recurrent episode of major depressive disorder (MDD) with evidence that they met the Diagnostic and Statistical Manual of Mental Disorders (DSM)-5 criteria for MDD AND for whom there is an assessment of depression severity during the visit in which a new diagnosis or recurrent episode was identified **Rationale:** CMS recommends removal due to this measure representing a clinically diagnostic reference that is commonly utilized in order to determine mental health disorders, therefore it does not add clinical value to PQRS.	AMA-PCPI	X		X				
1666/0123	Effective Clinical Care	**Adult Kidney Disease: Patients On Erythropoiesis-Stimulating Agent (ESA) - Hemoglobin Level > 12.0 g/dL:** Percentage of calendar months within a 12-month period during which a hemoglobin level is measured for patients aged 18 years and older with a diagnosis of advanced chronic kidney disease (CKD) (stage 4 or 5, not receiving Renal Replacement Therapy ([RRT]) or End Stage Renal Disease (ESRD) (who are on hemodialysis or peritoneal dialysis) who are also receiving erythropoiesis-stimulating agent (ESA) therapy AND have a hemoglobin level > 12.0 g/dL **Rationale:** CMS recommends removal due to this measure representing a medical concept of completion of a required diagnostic level in order to provide erythropoiesis-stimulating agent when clinically appropriate.	AMA-PCPI	X		X			X	
0566/0140	Effective Clinical Care	**Age-Related Macular Degeneration (AMD): Counseling on Antioxidant Supplement:** Percentage of patients aged 50 years and older with a diagnosis of age-related macular degeneration (AMD) or their caregiver(s) who were counseled within 12 months on the benefits and/or risks of the Age-Related Eye Disease Study (AREDS) formulation for preventing progression of AMD **Rationale:** CMS recommends removal due to eligible professionals consistently meeting performance on this measure with performance rates close to 100% suggesting there is no gap in care.	AMA-PCPI NCQA	X		X				
0051/0142	Effective Clinical Care	**Osteoarthritis (OA): Assessment for Use of Anti-Inflammatory or Analgesic Over-the-**	AMA-PCPI	X		X				

NQF/ PQRS	NQS Domain	Measure Title and Description[¥]	Measure Steward	Claims	CSV	Registry	EHR	GPRO (Web Interface)*	Measures Groups	Other Quality Reporting Programs
		Counter (OTC) Medications: Percentage of patient visits for patients aged 21 years and older with a diagnosis of osteoarthritis (OA) with an assessment for use of anti-inflammatory or analgesic over-the-counter (OTC)medications **Rationale:** CMS recommends removal due to this measure representing a clinical concept that does not add clinical value to PQRS due to assessment of patients' current medications is crucial to patient safety. Furthermore, the measure steward has indicated they will no longer maintain this measure.								
0508/0146	Efficiency and Cost Reduction	**Radiology: Inappropriate Use of "Probably Benign" Assessment Category in Mammography Screening:** Percentage of final reports for screening mammograms that are classified as "probably benign" **Rationale:** CMS recommends removal due to eligible professionals consistently meeting performance on this measure with performance rates close to 100% suggesting there is no gap in care.	AMA-PCPI NCQA	X		X				
2080/341	Efficiency and Cost Reduction	**Gap in HIV Medical Visits:** Percentage of patients, regardless of age, with a diagnosis of HIV who did not have a medical visit in the last 6 months **Rationale:** CMS recommends removal as this measure is duplicated within PQRS with current measure HIV Medica Visit Frequency (PQRS #340)s.	HRSA			X			X	
N/A/ 301	Effective Clinical Care	**Hypertension: Low Density Lipoprotein (LDL-C) Control**: Percentage of patients aged 18 through 90 years old with a diagnosis of hypertension who had most recent LDL cholesterol level under control (at goal) **Rationale:** CMS recommends removal as evidence-based guidelines have changed regarding lipid control.	ABIM						X	
N/A/ 272	Effective Clinical Care	**Inflammatory Bowel Disease (IBD): Preventive Care:** Influenza Immunization: Percentage of patients aged 18 years and older with a diagnosis of inflammatory bowel disease for whom influenza immunization was recommended, administered or previously received during the reporting year **Rationale:** CMS recommends removal as this measure is duplicated within PQRS with current measure Preventive Care and Screening: Influenza Immunization (PQRS #110).	AGA						X	
N/A/ 273	Effective Clinical Care	**Inflammatory Bowel Disease (IBD): Preventive Care: Pneumococcal Immunization:** Percentage of patients aged 18 years and older with a diagnosis of inflammatory bowel disease that had pneumococcal vaccination administered or previously received **Rationale:** CMS recommends removal as this measure is duplicated within PQRS with current	AGA						X	

NQF/ PQRS	NQS Domain	Measure Title and Description*	Measure Steward	Claims	CSV	Registry	EHR	GPRO (Web Interface)*	Measures Groups	Other Quality Reporting Programs
		measure Pneumonia Vaccination Status for Older Adults (PQRS #111).								
N/A/ 269	Effective Clinical Care	**Inflammatory Bowel Disease (IBD): Type, Anatomic Location and Activity All Documented**: Percentage of patients aged 18 years and older with a diagnosis of inflammatory bowel disease who have documented the disease type, anatomic location and activity, at least once during the reporting period **Rationale:** CMS recommends removal due to this measure representing a clinical concept that does not add clinical value to PQRS because in order to provide effective treatment for IBD, documentation of type, anatomic location and activity would be essential for effective treatment of IBD.	AGA						X	
N/A/ 267	Effective Clinical Care	**Epilepsy: Documentation of Etiology of Epilepsy or Epilepsy Syndrome:** All visits for patients with a diagnosis of epilepsy who had their etiology of epilepsy or with epilepsy syndrome(s) reviewed and documented if known, or documented as unknown or cryptogenic **Rationale:** CMS recommends removal due to eligible professionals consistently meeting performance on this measure with performance rates close to 100% suggesting there is no gap in care.	AAN	X		X				
N/A/ 261	Communication and Care Coordination	**Referral for Otologic Evaluation for Patients with Acute or Chronic Dizziness:** Percentage of patients aged birth and older referred to a physician (preferably a physician specially trained in disorders of the ear) for an otologic evaluation subsequent to an audiologic evaluation after presenting with acute or chronic dizziness **Rationale:** CMS recommends removal due to the clinical concept of medical referral being a common practice in order to provide effective treatment for patients.	AQC	X		X				
0643/243	Effective Clinical Care	**Cardiac Rehabilitation Patient Referral from an Outpatient Setting:** Percentage of patients evaluated in an outpatient setting who within the previous 12 months have experienced an acute myocardial infarction (MI), coronary artery bypass graft (CABG) surgery, a percutaneous coronary intervention (PCI), cardiac valve surgery, or cardiac transplantation, or who have chronic stable angina (CSA) and have not already participated in an early outpatient cardiac rehabilitation/secondary prevention (CR) program for the qualifying event/diagnosis who were referred to a CR program **Rationale:** CMS recommends removal due to this measure representing a clinical concept that is initiated within the inpatient setting and does not add clinical value to PQRS as an outpatient based measure.	ACCF AHA			X				
AQA Adopted/247	Effective Clinical Care	**Substance Use Disorders: Counseling Regarding Psychosocial and Pharmacologic Treatment Options for Alcohol Dependence:**	AMA-PCPI NCQA	X		X				AQA

NQF/ PQRS	NQS Domain	Measure Title and Description[¥]	Measure Steward	Claims	CSV	Registry	EHR	GPRO (Web Interface)*	Measures Groups	Other Quality Reporting Programs
		Percentage of patients aged 18 years and older with a diagnosis of current alcohol dependence who were counseled regarding psychosocial AND pharmacologic treatment options for alcohol dependence within the 12-month reporting period **Rationale:** CMS recommends removal due to eligible professionals consistently meeting performance on this measure with performance rates close to 100% suggesting there is no gap in care.								
AQA Adopted/248	Effective Clinical Care	**Substance Use Disorders: Screening for Depression Among Patients with Substance Abuse or Dependence:** Percentage of patients aged 18 years and older with a diagnosis of current substance abuse or dependence who were screened for depression within the 12-month reporting period **Rationale:** CMS recommends removal as this measure is duplicated within the Physician Quality Reporting System as a subset of an existing measure Preventive Care and Screening for Clinical Depression for Follow-up Plan (PQRS #134)).	AMA-PCPI NCQA	X		X				AQA
N/A/231	Effective Clinical Care	**Asthma: Tobacco Use: Screening - Ambulatory Care Setting:** Percentage of patients aged 5 through 64years with a diagnosis of asthma (or their primary caregiver) who were queried about tobacco use and exposure to second hand smoke within their home environment at least once during the one-year measurement period **Rationale:** CMS recommends removal as this measure is duplicated within PQRS with current measure Preventive Care and Screening: Tobacco Use: Screening and Cessation Intervention (PQRS 226).	AMA-PCPI NCQA	X		X			X	
N/A/232	Effective Clinical Care	**Asthma: Tobacco Use: Intervention - Ambulatory Care Setting**: Percentage of patients aged 5 through64 years with a diagnosis of asthma who were identified as tobacco users (or their primary caregiver) who received tobacco cessation intervention at least once during the one-year measurement period **Rationale:** CMS recommends removal as this measure is duplicated within PQRS with current measure Preventive Care and Screening: Tobacco Use: Screening and Cessation Intervention (PQRS 226).	AMA-PCPI NCQA	X		X			X	
0457/233	Effective Clinical Care	**Thoracic Surgery: Recording of Performance Status Prior to Lung or Esophageal Cancer Resection:** Percentage of patients aged 18 years and older undergoing resection for lung or esophageal cancer for whom performance status was documented and reviewed within 2 weeks prior to surgery **Rationale:** CMS recommends removal due to eligible professionals consistently meeting performance on this measure with performance rates close to 100% suggesting there is no gap in	STS			X				

NQF/ PQRS	NQS Domain	Measure Title and Description*	Measure Steward	Claims	CSV	Registry	EHR	GPRO (Web Interface)*	Measures Groups	Other Quality Reporting Programs
		care.								
0458/234	Patient Safety	**Thoracic Surgery: Pulmonary Function Tests Before Major Anatomic Lung Resection (Pneumonectomy, Lobectomy, or Formal Segmentectomy):** Percentage of thoracic surgical patients aged 18 years and older undergoing at least one pulmonary function test within 12 months prior to a major lung resection (pneumonectomy, lobectomy, or formal segmentectomy) **Rationale:** CMS recommends removal due to eligible professionals consistently meeting performance on this measure with performance rates close to 100% suggesting there is no gap in care.	STS			X				
0074/197	Effective Clinical Care	**Coronary Artery Disease (CAD): Lipid Control:** Percentage of patients aged 18 years and older with a diagnosis of coronary artery disease seen within a 12 month period who have a LDL-C result < 100 mg/dL OR patients who have a LDL-C result ≥ 100 mg/dL and have a documented plan of care to achieve LDL-C <100 mg/dL, including at a minimum the prescription of a statin **Rationale:** CMS recommends removal as evidence-based guidelines have changed regarding lipid control. This measure is also being proposed for removal from the GPRO WI.	AMA-PCPI ACCF AHA			X		X	X	
0079/198	Effective Clinical Care	**Heart Failure: Left Ventricular Ejection Fraction (LVEF) Assessment:** Percentage of patients aged 18 years and older with a diagnosis of heart failure for whom the quantitative or qualitative results of a recent or prior [any time in the past] LVEF assessment is documented within a 12 month period **Rationale:** CMS recommends removal due to this measure representing a clinical concept that does not add clinical value to PQRS. LVF testing is basic assessment for patients with heart failure.	AMA-PCPI ACCF AHA			X			X	
0115/168	Effective Clinical Care	**Coronary Artery Bypass Graft (CABG): Surgical Re-Exploration:** Percentage of patients aged 18 years and older undergoing isolated CABG surgery who require a return to the operating room (OR) during the current hospitalization for mediastinal bleeding with or without tamponade, graft occlusion, valve dysfunction, or other cardiac reason **Rationale:** CMS recommends removal due to eligible professionals consistently meeting performance on this measure with performance rates close to 100% suggesting there is no gap in care.	STS			X			X	
0116/169	Effective Clinical Care	**Coronary Artery Bypass Graft (CABG): Antiplatelet Medications at Discharge:** Percentage of patients aged 18 years and older undergoing isolated CABG surgery who were discharged on antiplatelet medication **Rationale:** CMS recommends removal due to eligible professionals consistently meeting	STS			X			X	

NQF/ PQRS	NQS Domain	Measure Title and Description[¥]	Measure Steward	Claims	CSV	Registry	EHR	GPRO (Web Interface)*	Measures Groups	Other Quality Reporting Programs
		performance on this measure with performance rates close to 100% suggesting there is no gap in care.								
0117/170	Effective Clinical Care	**Coronary Artery Bypass Graft (CABG): Beta-Blockers Administered at Discharge:** Percentage of patients aged 18 years and older undergoing isolated CABG surgery who were discharged on beta-blockers **Rationale:** CMS recommends removal due to eligible professionals consistently meeting performance on this measure with performance rates close to 100% suggesting there is no gap in care.	STS			X			X	
0118/171	Effective Clinical Care	**Coronary Artery Bypass Graft (CABG): Anti-Lipid Treatment at Discharge**: Percentage of patients aged 18 years and older undergoing isolated CABG surgery who were discharged on a statin or other lipid-lowering regimen **Rationale:** CMS recommends removal due to eligible professionals consistently meeting performance on this measure with performance rates close to 100% suggesting there is no gap in care.	STS			X			X	
0455/157	Patient Safety	**Thoracic Surgery: Recording of Clinical Stage Prior to Lung Cancer or Esophageal Cancer Resection:** Percentage of surgical patients aged 18 years and older undergoing resection for lung or esophageal cancer who had clinical staging provided prior to surgery **Rationale:** CMS recommends removal due to eligible professionals consistently meeting performance on this measure with performance rates close to 100% suggesting there is no gap in care.	STS	X		X				
0404/159	Effective Clinical Care	**HIV/AIDS: CD4+ Cell Count or CD4+ Percentage Performed:** Percentage of patients aged 6 months and older with a diagnosis of HIV/AIDS for whom a CD4+ cell count or CD4+ cell percentage was performed at least once every 6 months **Rationale:** CMS recommends removal due to eligible professionals consistently meeting performance on this measure with performance rates close to 100% suggesting there is no gap in care.	AMA-PCPI NCQA			X			X	
N/A/ 257	Effective Clinical Care	**Statin Therapy at Discharge after Lower Extremity Bypass (LEB):** Percentage of patients aged 18 years and older undergoing infra-inguinal lower extremity bypass who are prescribed a statin medication at discharge **Rationale:** CMS recommends removal due to this measure representing a clinical concept that is currently accepted standard treatment for patients that receive lower extremity revascularization when clinically indicated.	SVS			X				
N/A/ 296	Effective Clinical Care	**Hypertension: Complete Lipid Profile:** Percentage of patients aged 18 through 90 years old with a diagnosis of hypertension who received a complete lipid profile within 60	ABIM						X	

NQF/ PQRS	NQS Domain	Measure Title and Description[#]	Measure Steward	Claims	CSV	Registry	EHR	GPRO (Web Interface)*	Measures Groups	Other Quality Reporting Programs
		months **Rationale:** CMS recommends removal due to measure steward indicating they will no longer maintain this measure.								
0322/148	Efficiency and Cost Reduction	**Back Pain: Initial Visit:** The percentage of patients aged 18 through 79 years with a diagnosis of back pain or undergoing back surgery who had back pain and function assessed during the initial visit to the clinician for the episode of back pain **Rationale:** CMS recommends removal due to this measure representing clinical assessments commonly utilized to provide effective treatment for patients diagnosed with back pain.	NCQA						X	
0319/149	Effective Clinical Care	**Back Pain: Physical Exam:** Percentage of patients aged 18 through 79 years with a diagnosis of back pain or undergoing back surgery who received a physical examination at the initial visit to the clinician for the episode of back pain **Rationale:** CMS recommends removal due to this measure representing clinical assessments commonly utilized to provide effective treatment for patients diagnosed with back pain.	NCQA						X	
0314/150	Effective Clinical Care	**Back Pain: Advice for Normal Activities**: The percentage of patients aged 18 through 79 years with a diagnosis of back pain or undergoing back surgery who received advice for normal activities at the initial visit to the clinician for the episode of back pain **Rationale:** CMS recommends removal due to this measure representing clinical recommendations that are commonly provided for patients diagnosed with back pain when clinically indicated.	NCQA						X	
0313/151	Effective Clinical Care	**Back Pain: Advice Against Bed Rest**: The percentage of patients aged 18 through 79 years with a diagnosis of back pain or undergoing back surgery who received advice against bed rest lasting four days or longer at the initial visit to the clinician for the episode of back pain **Rationale:** CMS recommends removal due to this measure representing clinical recommendations that are commonly provided for patients diagnosed with back pain when clinically indicated.	NCQA						X	
0091/051	Effective Clinical Care	**Chronic Obstructive Pulmonary Disease (COPD): Spirometry Evaluation:** Percentage of patients aged 18 years and older with a diagnosis of COPD who had spirometry evaluation results documented **Rationale:** CMS recommends removal due to the measure steward indicating they will no longer maintain this measure.	AMA-PCPI			X			X	
0102/052	Effective Clinical Care	**Chronic Obstructive Pulmonary Disease (COPD): Inhaled Bronchodilator Therapy:** Percentage of patients aged 18 years and older	AMA-PCPI			X			X	

NQF/ PQRS	NQS Domain	Measure Title and Description[¥]	Measure Steward	Claims	CSV	Registry	EHR	GPRO (Web Interface)*	Measures Groups	Other Quality Reporting Programs
		with a diagnosis of COPD and who have an FEV_1/FVC less than 60% and have symptoms who were prescribed an inhaled bronchodilator **Rationale:** CMS recommends removal due to the measure steward indicating they will no longer maintain this measure.								
0050/109	Person and Caregiver-Centered Experience and Outcomes	**Osteoarthritis (OA): Function and Pain Assessment:** Percentage of patient visits for patients aged 21 years and older with a diagnosis of osteoarthritis (OA) with assessment for function and pain **Rationale:** CMS recommends removal due to the measure steward indicating they will no longer maintain this measure.	AMA-PCPI			X				
N/A/276	Effective Clinical Care	**Sleep Apnea: Assessment of Sleep Symptoms:** Percentage of visits for patients aged 18 years and older with a diagnosis of obstructive sleep apnea that includes documentation of an assessment of sleep symptoms, including presence or absence of snoring and daytime sleepiness **Rationale:** CMS recommends removal due to the measure steward indicating they will no longer maintain this measure.	AMA-PCPI/NCQA						X	
N/A/277	Effective Clinical Care	**Sleep Apnea: Severity Assessment at Initial Diagnosis:** Percentage of patients aged 18 years and older with a diagnosis of obstructive sleep apnea who had an apnea hypopnea index (AHI) or a respiratory disturbance index (RDI) measured at the time of initial diagnosis **Rationale:** CMS recommends removal due to the measure steward indicating they will no longer maintain this measure.	AMA-PCPI/NCQA						X	
N/A/278	Effective Clinical Care	**Sleep Apnea: Positive Airway Pressure Therapy Prescribed:** Percentage of patients aged 18 years and older with a diagnosis of moderate or severe obstructive sleep apnea who were prescribed positive airway pressure therapy **Rationale:** CMS recommends removal due to the measure steward indicating they will no longer maintain this measure.	AMA-PCPI/NCQA						X	
N/A/279	Effective Clinical Care	**Sleep Apnea: Assessment of Adherence to Positive Airway Pressure Therapy:** Percentage of visits for patients aged 18 years and older with a diagnosis of obstructive sleep apnea who were prescribed positive airway pressure therapy who had documentation that adherence to positive airway pressure therapy was objectively measured **Rationale:** CMS recommends removal due to the measure steward indicating they will no longer maintain this measure.	AMA-PCPI/NCQA						X	
N/A/147	Communication and Care Coordination	**Nuclear Medicine: Correlation with Existing Imaging Studies for All Patients Undergoing Bone Scintigraphy:** Percentage of final reports for all patients, regardless of age, undergoing bone scintigraphy that include physician	AMA-PCPI	X		X				

NQF/ PQRS	NQS Domain	Measure Title and Description¥	Measure Steward	Claims	CSV	Registry	EHR	GPRO (Web Interface)*	Measures Groups	Other Quality Reporting Programs
		documentation of correlation with existing relevant imaging studies (e.g., x-ray, MRI, CT, etc.) that were performed. **Rationale:** CMS recommends removal due to the measure steward indicating they will no longer maintain this measure.								
AQA Adopted/173	Community/ Population Health	**Preventive Care and Screening: Unhealthy Alcohol Use – Screening:** Percentage of patients aged 18 years and older who were screened for unhealthy alcohol use using a systematic screening method within 24 months. **Rationale:** CMS recommends removal due to the measure steward indicating they will no longer maintain this measure.	AMA-PCPI			X			X	
N/A/335	Patient Safety	**Maternity Care: Elective Delivery or Early Induction Without Medical Indication at ≥ 37 and < 39 Weeks:** Percentage of patients, regardless of age, who gave birth during a 12-month period who delivered a live singleton at ≥ 37 and < 39 weeks of gestation completed who had elective deliveries or early inductions without medical indication. **Rationale:** CMS recommends removal due to the measure steward indicating they will no longer maintain this measure.	AMA-PCPI			X				
N/A/336	Communication and Care Coordination	**Maternity Care: Post-Partum Follow-Up and Care Coordination:** Percentage of patients, regardless of age, who gave birth during a 12-month period who were seen for post-partum care within 8 weeks of giving birth who received a breast feeding evaluation and education, post-partum depression screening, post-partum glucose screening for gestational diabetes patients, and family and contraceptive planning **Rationale:** CMS recommends removal due to the measure steward indicating they will no longer maintain this measure.	AMA-PCPI			X				

¥ Measure details including titles, descriptions and measure owner information may vary during a particular program year. This is due to the timing of measure specification preparation and the measure versions used by the various reporting options/methods. Please refer to the measure specifications that apply for each of the reporting options/methods for specific measure details.

In Table 25 below, we specify our proposals to change the way in which previously established measures in the PQRS will be reported beginning in 2015. Please note that, in Table 25, we provide our explanation as to how we are proposing to change the way the measure is reported, as well as a corresponding rationale for this proposed change.

TABLE 25: Existing Individual Quality Measures and Those Included in Measures Groups for the PQRS for Which Measure Reporting Updates will be Effective Beginning in 2015

NQF/ PQRS	CMS E-Measure ID	National Quality Strategy Domain	Measure Title and Description[¥]	Measure Steward	Claims	CSV	Registry	EHR	GPRO (Web Interface)*	Measures Groups	Other Quality Reporting Programs
006 7/6		Effective Clinical Care	**Coronary Artery Disease (CAD): Antiplatelet Therapy:** Percentage of patients aged 18 years and older with a diagnosis of coronary artery disease seen within a 12 month period who were prescribed aspirin or clopidogrel **Rationale:** CMS proposes to remove the claims reporting option for this measure as CMS seeks to move the PQRS program away from claims reporting.	AMA-PCPI ACCF AHA			X		X	X	ACO
008 6/12	143 v2	Effective Clinical Care	**Primary Open-Angle Glaucoma (POAG): Optic Nerve Evaluation:** Percentage of patients aged 18 years and older with a diagnosis of primary open-angle glaucoma (POAG) who have an optic nerve head evaluation during one or more office visits within 12 months **Rationale:** CMS proposes to remove the claims reporting option for this measure as CMS seeks to move the PQRS program away from claims reporting.	AMA-PCPI NCQA			X	X			MU2
008 9/19	142 v2	Effective Clinical Care	**Diabetic Retinopathy: Communication with the Physician Managing Ongoing Diabetes Care:** Percentage of patients aged 18 years and older with a diagnosis of diabetic retinopathy who had a dilated macular or fundus exam performed with documented communication to the physician who manages the ongoing care of the patient with diabetes mellitus regarding the findings of the macular or fundus exam at least once within 12 months **Rationale:** CMS proposes to remove the claims reporting option for this measure as CMS seeks to move the PQRS program away from claims reporting.	AMA-PCPI NCQA			X	X			MU2
004 5/24		Communication and Care Coordination	**Osteoporosis: Communication with the Physician Managing On-going Care Post-Fracture of Hip, Spine or Distal Radius for Men and Women Aged 50 Years and Older:** Percentage of patients aged 50 years and older treated for a hip, spine or distal radial fracture with documentation of communication with the physician managing the patient's on-going care that a fracture occurred and that the patient was or should be tested or treated for osteoporosis **Rationale:** CMS proposes to remove the claims reporting option for this measure as CMS seeks to	AMA-PCPI NCQA			X				

NQF/ PQRS	CMS E-Measure ID	National Quality Strategy Domain	Measure Title and Description[¥]	Measure Steward	Claims	CSV	Registry	EHR	GPRO (Web Interface)*	Measures Groups	Other Quality Reporting Programs
			move the PQRS program away from claims reporting.								
004 6/39		Effective Clinical Care	**Screening or Therapy for Osteoporosis for Women Aged 65 Years and Older:** Percentage of female patients aged 65 years and older who have a central dual-energy X-ray absorptiometry (DXA) measurement ordered or performed at least once since age 60 or pharmacologic therapy prescribed within 12 months **Rationale:** CMS proposes to remove the claims reporting option for this measure as CMS seeks to move the PQRS program away from claims reporting.	AMA-PCPI NCQA			X			X	
004 8/40		Effective Clinical Care	**Osteoporosis: Management Following Fracture of Hip, Spine or Distal Radius for Men and Women Aged 50 Years and Older:** Percentage of patients **aged 50 years and older** with fracture of the hip, spine, or distal radius who had a central dual-energy X-ray absorptiometry (DXA) measurement ordered or performed or pharmacologic therapy prescribed **Rationale:** CMS proposes to remove the claims reporting option for this measure as CMS seeks to move the PQRS program away from claims reporting.	AMA-PCPI NCQA			X				
013 4/43		Effective Clinical Care	**Coronary Artery Bypass Graft (CABG): Use of Internal Mammary Artery (IMA) in Patients with Isolated CABG Surgery:** Percentage of patients aged 18 years and older undergoing isolated CABG surgery who received an IMA graft **Rationale:** CMS proposes to remove the claims reporting option for this measure as CMS seeks to move the PQRS program away from claims reporting.	STS			X			X	
009 7/46		Communication and Care Coordination	**Medication Reconciliation:** Percentage of patients aged 65 years and older **discharged from any inpatient facility** (e.g., hospital, skilled nursing facility, or rehabilitation facility) and **seen within 30 days following discharge** in the office by the physician, prescribing practitioner, registered nurse, or clinical pharmacist providing on-going care who had a reconciliation of the discharge medications with the current medication list in the outpatient medical record documented **Rationale:** CMS proposes to remove the claims reporting option for this measure as CMS seeks to	AMA-PCPI NCQA			X				

NQF/ PQRS	CMS E-Measure ID	National Quality Strategy Domain	Measure Title and Description[¥]	Measure Steward	Claims	CSV	Registry	EHR	GPRO (Web Interface)*	Measures Groups	Other Quality Reporting Programs
			move the PQRS program away from claims reporting.								
010 0/50		Person and Caregiver-Centered Experience and Outcomes	**Urinary Incontinence: Plan of Care for Urinary Incontinence in Women Aged 65 Years and Older:** Percentage of female patients aged 65 years and older with a diagnosis of urinary incontinence with a documented plan of care for urinary incontinence at least once within 12 months **Rationale:** CMS proposes to remove the claims reporting option for this measure as CMS seeks to move the PQRS program away from claims reporting.	AMA-PCPI NCQA			X				
009 0/54		Effective Clinical Care	**Emergency Medicine: 12-Lead Electrocardiogram (ECG) Performed for Non-Traumatic Chest Pain:** Percentage of patients aged 40 years and older with an emergency department discharge diagnosis of non-traumatic chest pain who had a 12-lead electrocardiogram (ECG) performed **Rationale:** CMS proposes to remove the claims reporting option for this measure as CMS seeks to move the PQRS program away from claims reporting.	AMA-PCPI NCQA			X				
037 7/67		Effective Clinical Care	**Hematology: Myelodysplastic Syndrome (MDS) and Acute Leukemias: Baseline Cytogenetic Testing Performed on Bone Marrow:** Percentage of patients aged 18 years and older with a diagnosis of myelodysplastic syndrome (MDS) or an acute leukemia who had baseline cytogenetic testing performed on bone marrow **Rationale:** CMS proposes to remove the claims reporting option for this measure as CMS seeks to move the PQRS program away from claims reporting.	AMA-PCPI ASH			X				
037 8/68		Effective Clinical Care	**Hematology: Myelodysplastic Syndrome (MDS): Documentation of Iron Stores in Patients Receiving Erythropoietin Therapy:** Percentage of patients aged 18 years and older with a diagnosis of myelodysplastic syndrome (MDS) who are receiving erythropoietin therapy with documentation of iron stores within 60 days prior to initiating erythropoietin therapy **Rationale:** CMS proposes to remove the claims reporting option for this measure as CMS seeks to move the PQRS program away from claims reporting.	AMA-PCPI ASH			X				

NQF/ PQRS	CMS E-Measure ID	National Quality Strategy Domain	Measure Title and Description[¥]	Measure Steward	Claims	CSV	Registry	EHR	GPRO (Web Interface)*	Measures Groups	Other Quality Reporting Programs
038 0/69		Effective Clinical Care	**Hematology: Multiple Myeloma: Treatment with Bisphosphonates:** Percentage of patients aged 18 years and older with a diagnosis of multiple myeloma, not in remission, who were prescribed or received intravenous bisphosphonate therapy within the 12-month reporting period **Rationale:** CMS proposes to remove the claims reporting option for this measure as CMS seeks to move the PQRS program away from claims reporting.	AMA-PCPI ASH			X				
037 9/70		Effective Clinical Care	**Hematology: Chronic Lymphocytic Leukemia (CLL): Baseline Flow Cytometry:** Percentage of patients aged 18 years and older seen within a 12 month reporting period with a diagnosis of chronic lymphocytic leukemia (CLL) made at any time during or prior to the reporting period who had baseline flow cytometry studies performed and documented in the chart **Rationale:** CMS proposes to remove the claims reporting option for this measure as CMS seeks to move the PQRS program away from claims reporting.	AMA-PCPI ASH			X				
038 7/71	140 v1	Effective Clinical Care	**Breast Cancer: Hormonal Therapy for Stage IC - IIIC Estrogen Receptor/Progesterone Receptor (ER/PR) Positive Breast Cancer:** Percentage of female patients aged 18 years and older with Stage IC through IIIC, ER or PR positive breast cancer who were prescribed tamoxifen or aromatase inhibitor (AI) during the 12-month reporting period **Rationale:** CMS proposes to remove the claims reporting option for this measure as CMS seeks to move the PQRS program away from claims reporting.	AMA-PCPI ASCO NCCN			X	X		X	MU2
038 5/72	141 v3	Effective Clinical Care	**Colon Cancer: Chemotherapy for AJCC Stage III Colon Cancer Patients:** Percentage of patients aged 18 through 80 years with AJCC Stage III colon cancer who are referred for adjuvant chemotherapy, prescribed adjuvant chemotherapy, or have previously received adjuvant chemotherapy within the 12-month reporting period **Rationale:** CMS proposes to remove the claims reporting option for this measure as CMS seeks to move the PQRS program away from claims reporting.	AMA-PCPI ASCO NCCN			X	X		X	MU2
038	129	Efficiency	**Prostate Cancer: Avoidance of Overuse of Bone**	AMA-			X	X			MU2

NQF/ PQRS	CMS E-Measure ID	National Quality Strategy Domain	Measure Title and Description[¥]	Measure Steward	Claims	CSV	Registry	EHR	GPRO (Web Interface)*	Measures Groups	Other Quality Reporting Programs
9 /102	v3	and Cost Reduction	**Scan for Staging Low Risk Prostate Cancer Patients:** Percentage of patients, regardless of age, with a diagnosis of prostate cancer at low risk of recurrence receiving interstitial prostate brachytherapy, OR external beam radiotherapy to the prostate, OR radical prostatectomy, OR cryotherapy who did **not** have a bone scan performed at any time since diagnosis of prostate cancer **Rationale:** CMS proposes to remove the claims reporting option for this measure as CMS seeks to move the PQRS program away from claims reporting.	PCPI							
039 0 /104		Effective Clinical Care	**Prostate Cancer: Adjuvant Hormonal Therapy for High Risk Prostate Cancer Patients:** Percentage of patients, regardless of age, with a diagnosis of prostate cancer at high risk of recurrence receiving external beam radiotherapy to the prostate who were prescribed adjuvant hormonal therapy (GnRH agonist or antagonist) **Rationale:** CMS proposes to remove the claims reporting option for this measure as CMS seeks to move the PQRS program away from claims reporting.	AMA-PCPI			X				
N/A /112		Effective Clinical Care	**Breast Cancer Screening:** Percentage of women 50 through 74 years of age who had a mammogram to screen for breast cancer within 27 months **Rationale:** CMS proposes to remove the claims reporting option for this measure as CMS seeks to move the PQRS program away from claims reporting.	NCQA			X	X	X	X	MU2
003 4 /113	130 v2	Effective Clinical Care	**Colorectal Cancer Screening:** Percentage of patients 50 through 75 years of age who had appropriate screening for colorectal cancer **Rationale:** CMS proposes to remove the claims reporting option for this measure as CMS seeks to move the PQRS program away from claims reporting.	NCQA			X	X	X	X	MU2
005 5 /117	131 v2	Effective Clinical Care	**Diabetes: Eye Exam:** Percentage of patients 18 through 75 years of age with a diagnosis of diabetes (type 1 and type 2) who had a retinal or dilated eye exam in the measurement period or a negative retinal or dilated eye exam (negative for retinopathy) in the year prior to the measurement period	NCQA			X	X	X	X	ACO MU2

NQF/ PQRS	CMS E-Measure ID	National Quality Strategy Domain	Measure Title and Description[¥]	Measure Steward	Claims	CSV	Registry	EHR	GPRO (Web Interface)*	Measures Groups	Other Quality Reporting Programs
			Rationale: CMS proposes to remove the claims reporting option for this measure as CMS seeks to move the PQRS program away from claims reporting.								
006 2 /119	134 v2	Effective Clinical Care	**Diabetes: Medical Attention for Nephropathy:** The percentage of patients 18-75 years of age with diabetes who had a nephropathy screening test or evidence of nephropathy during the measurement period **Rationale:** CMS proposes to remove the claims reporting option for this measure as CMS seeks to move the PQRS program away from claims reporting.	NCQA			X	X		X	MU2
166 8 /121		Effective Clinical Care	**Adult Kidney Disease: Laboratory Testing (Lipid Profile):** Percentage of patients aged 18 years and older with a diagnosis of chronic kidney disease (CKD) (stage 3, 4, or 5, not receiving Renal Replacement Therapy [RRT]) who had a fasting lipid profile performed at least once within a 12-month period **Rationale:** CMS proposes to remove the claims reporting option for this measure as CMS seeks to move the PQRS program away from claims reporting.	AMA-PCPI			X			X	
AQ A Ado pted /122		Effective Clinical Care	**Adult Kidney Disease: Blood Pressure Management:** Percentage of patient visits for those patients aged 18 years and older with a diagnosis of chronic kidney disease (CKD) (stage 3, 4, or 5, not receiving Renal Replacement Therapy [RRT]) and proteinuria with a blood pressure < 130/80 mmHg OR ≥ 130/80 mmHg with a documented plan of care **Rationale:** CMS proposes to remove the claims reporting option for this measure as CMS seeks to move the PQRS program away from claims reporting.	AMA-PCPI			X			X	AQA
056 3 /141		Communicati on and Care Coordination	**Primary Open-Angle Glaucoma (POAG): Reduction of Intraocular Pressure (IOP) by 15% OR Documentation of a Plan of Care:** Percentage of patients aged 18 years and older with a diagnosis of primary open-angle glaucoma (POAG) whose glaucoma treatment has not failed (the most recent IOP was reduced by at least 15% from the pre- intervention level) OR if the most recent IOP was not reduced by at least 15% from the pre- intervention level, a plan of care was documented within 12 months	AMA-PCPI NCQA			X				

NQF/ PQRS	CMS E-Measure ID	National Quality Strategy Domain	Measure Title and Description[¥]	Measure Steward	Claims	CSV	Registry	EHR	GPRO (Web Interface)*	Measures Groups	Other Quality Reporting Programs
			Rationale: CMS proposes to remove the claims reporting option for this measure as CMS seeks to move the PQRS program away from claims reporting.								
005 6 /163	123 v2	Effective Clinical Care	**Diabetes: Foot Exam:** Percentage of patients aged 18-75 years of age with diabetes who had a foot exam during the measurement period **Rationale:** CMS proposes to remove the claims reporting option for this measure as CMS seeks to move the PQRS program away from claims reporting.	NCQA			X	X	X	X	ACO MU2
065 9 /185		Communicati on and Care Coordination	**Endoscopy /Polyp Surveillance: Colonoscopy Interval for Patients with a History of Adenomatous Polyps – Avoidance of Inappropriate Use:** Percentage of patients aged 18 years and older receiving a surveillance colonoscopy with a history of a prior adenomatous polyp(s) in previous colonoscopy findings, who had an interval of 3 or more years since their last colonoscopy **Rationale:** CMS proposes to remove the claims reporting option for this measure as CMS seeks to move the PQRS program away from claims reporting.	AMA-PCPI ASCO			X				
038 6 /194		Effective Clinical Care	**Oncology: Cancer Stage Documented:** Percentage of patients, regardless of age, with a diagnosis of cancer who are seen in the ambulatory setting who have a baseline American Joint Committee on Cancer (AJCC) cancer stage or documentation that the cancer is metastatic in the medical record at least once during the 12 month reporting period **Rationale:** CMS proposes to remove the claims reporting option for this measure as CMS seeks to move the PQRS program away from claims reporting.	AMA-PCPI NCQA			X				
065 1 /254		Effective Clinical Care	**Ultrasound Determination of Pregnancy Location for Pregnant Patients with Abdominal Pain:** Percentage of pregnant female patients aged 14 to 50 who present to the emergency department (ED) with a chief complaint of abdominal pain or vaginal bleeding who receive a trans-abdominal or trans-vaginal ultrasound to determine pregnancy location **Rationale:** CMS proposes to remove the claims reporting option for this measure as CMS seeks to move the PQRS program away from claims	ACEP			X				

NQF/ PQRS	CMS E-Measure ID	National Quality Strategy Domain	Measure Title and Description[¥]	Measure Steward	Claims	CSV	Registry	EHR	GPRO (Web Interface)*	Measures Groups	Other Quality Reporting Programs
			reporting.								
065 2 /255		Effective Clinical Care	**Rh Immunoglobulin (Rhogam) for Rh-Negative Pregnant Women at Risk of Fetal Blood Exposure:** Percentage of Rh-negative pregnant women aged 14-50 years at risk of fetal blood exposure who receive Rh-Immunoglobulin (Rhogam) in the emergency department (ED) **Rationale:** CMS proposes to remove the claims reporting option for this measure as CMS seeks to move the PQRS program away from claims reporting.	ACEP			X				
N/A /268		Effective Clinical Care	**Epilepsy: Counseling for Women of Childbearing Potential with Epilepsy:** All female patients of childbearing potential (12-44 years old) diagnosed with epilepsy who were counseled about epilepsy and how its treatment may affect contraception and pregnancy at least once a year **Rationale:** CMS proposes to remove the claims reporting option for this measure as CMS seeks to move the PQRS program away from claims reporting.	AAN			X				
065 8 /320		Communicati on and Care Coordination	**Endoscopy/Polyp Surveillance: Appropriate Follow-Up Interval for Normal Colonoscopy in Average Risk Patients:** Percentage of patients aged 50 years and older receiving a screening colonoscopy without biopsy or polypectomy who had a recommended follow-up interval of at least 10 years for repeat colonoscopy documented in their colonoscopy report **Rationale:** CMS proposes to remove the claims reporting option for this measure as CMS seeks to move the PQRS program away from claims reporting.	AMA-PCPI			X				
152 5 /326		Effective Clinical Care	**Atrial Fibrillation and Atrial Flutter: Chronic Anticoagulation Therapy:** Percentage of patients aged 18 and older with a diagnosis of nonvalvular atrial fibrillation (AF) or atrial flutter whose assessment of the specified thromboembolic risk factors indicate one or more high-risk factors or more than one moderate risk factor, as determined by $CHADS_2$ risk stratification, who were prescribed warfarin OR another oral anticoagulant drug that is FDA approved for the prevention of thromboembolism **Rationale:** CMS proposes to remove the claims reporting option for this measure as CMS seeks to	AMA-PCPI ACCF AHA			X				

NQF/ PQRS	CMS E-Measure ID	National Quality Strategy Domain	Measure Title and Description[¥]	Measure Steward	Claims	CSV	Registry	EHR	GPRO (Web Interface)*	Measures Groups	Other Quality Reporting Programs
			move the PQRS program away from claims reporting.								
N/A /327		Effective Clinical Care	**Pediatric Kidney Disease: Adequacy of Volume Management:** Percentage of calendar months within a 12-month period during which patients aged 17 years and younger with a diagnosis of End Stage Renal Disease (ESRD) undergoing maintenance hemodialysis in an outpatient dialysis facility have an assessment of the adequacy of volume management from a nephrologist **Rationale:** CMS proposes to remove the claims reporting option for this measure as CMS seeks to move the PQRS program away from claims reporting.	AMA-PCPI			X				
166 7 /328		Effective Clinical Care	**Pediatric Kidney Disease: ESRD Patients Receiving Dialysis: Hemoglobin Level < 10g/dL:** Percentage of calendar months within a 12-month period during which patients aged 17 years and younger with a diagnosis of End Stage Renal Disease (ESRD) receiving hemodialysis or peritoneal dialysis have a hemoglobin level < 10 g/dL **Rationale:** CMS proposes to remove the claims reporting option for this measure as CMS seeks to move the PQRS program away from claims reporting.	AMA-PCPI			X				
010 4/10 7	161 v2	Effective Clinical Care	**Adult Major Depressive Disorder (MDD): Suicide Risk Assessment:** Percentage of patients aged 18 years and older with a diagnosis of major depressive disorder (MDD) with a suicide risk assessment completed during the visit in which a new diagnosis or recurrent episode was identified **Rationale:** CMS initially wanted to propose removal of this measure as it is a process measure that is low bar. However, to maintain alignment with the EHR Incentive Program, under which this measure is also available for reporting in 2015, CMS proposes to maintain this measure in PQRS for EHR reporting only, removing all other reporting options.	AMA-PCPI				X			MU2
010 5/9	128 v2	Effective Clinical Care	**Anti-Depressant Medication Management:** "Percentage of patients 18 years of age and older who were diagnosed with major depression and treated with antidepressant medication, and who remained on antidepressant medication treatment. Two rates are reported a. Percentage of patients who remained on an antidepressant medication for at least 84 days (12	NCQA				X			MU2

NQF/ PQRS	CMS E-Measure ID	National Quality Strategy Domain	Measure Title and Description[¥]	Measure Steward	Claims	CSV	Registry	EHR	GPRO (Web Interface)*	Measures Groups	Other Quality Reporting Programs
			weeks). b. Percentage of patients who remained on an antidepressant medication for at least 180 days (6 months). **Rationale:** CMS initially wanted to propose removal of this measure as it is a process measure that is analytically challenging to report. However, to maintain alignment with the EHR Incentive Program, under which this measure is also available for reporting in 2015, CMS proposes to maintain this measure in PQRS for EHR reporting only, removing all other reporting options.								
006 4/2	163 v2	Effective Clinical Care	**Diabetes: Low Density Lipoprotein (LDL-C) Control (<100 mg/Dl:** Percentage of patients 18–75 years of age with diabetes whose LDL-C was adequately controlled (< 100 mg/dL) during the measurement period **Rationale:** CMS initially wanted to propose removal of this measure as it would be duplicative of the new diabetes composite. However, to maintain alignment with the EHR Incentive Program, under which this measure is also available for reporting in 2015, CMS proposes to maintain this measure in PQRS for EHR reporting only, removing all other reporting options.	NCQA				X			MU2 Million Hearts
008 8/00 18	167 v2	Effective Clinical Care	**Diabetic Retinopathy: Documentation of Presence or Absence of Macular Edema and Level of Severity of Retinopathy:** Percentage of patients aged 18 years and older with a diagnosis of diabetic retinopathy who had a dilated macular or fundus exam performed which included documentation of the level of severity of retinopathy and the presence or absence of macular edema during one or more office visits within 12 months **Rationale:** CMS initially wanted to propose removal of this measure as eligible professionals are consistently meeting performance on this measure with performance rates close to 100%. However, to maintain alignment with the EHR Incentive Program, under which this measure is also available for reporting in 2015, CMS proposes to maintain this measure in PQRS for EHR reporting only, removing all other reporting options.	AMA-PCPI NCQA				X			MU2
006 8/20 4	164 v2	Effective Clinical Care	**Ischemic Vascular Disease (IVD): Use of Aspirin or Another Antithrombotic:** Percentage of patients 18 years of age and older who were discharged alive for acute myocardial infarction	NCQA				X			MU2 Million Hearts

NQF/ PQRS	CMS E-Measure ID	National Quality Strategy Domain	Measure Title and Description[¥]	Measure Steward	Claims	CSV	Registry	EHR	GPRO (Web Interface)*	Measures Groups	Other Quality Reporting Programs
			(AMI), coronary artery bypass graft (CABG) or percutaneous coronary interventions (PCI) in the 12 months prior to the measurement period, or who had an active diagnosis of ischemic vascular disease (IVD) during the measurement period and who had documentation of use of aspirin or another antithrombotic during the measurement period **Rationale:** CMS initially wanted to propose removal of this measure due to changing clinical guidelines (ATP-4). However, to maintain alignment with the EHR Incentive Program, under which this measure is also available for reporting in 2015, CMS proposes to maintain this measure in PQRS for EHR reporting only, removing all other reporting options.								
007 5/24 1	182 v3	Effective Clinical Care	**Ischemic Vascular Disease (IVD): Complete Lipid Profile and LDL-C Control (<100 mg/dL):** Percentage of patients 18 years of age and older who were discharged alive for acute myocardial infarction (AMI), coronary artery bypass graft (CABG) or percutaneous coronary interventions (PCI) in the 12 months prior to the measurement period, or who had an active diagnosis of ischemic vascular disease (IVD) during the measurement period, and who had each of the following during the measurement period: a complete lipid profile and LDL-C was adequately controlled (< 100 mg/dL) **Rationale:** CMS initially wanted to propose removal of this measure due to changing clinical guidelines (ATP-4). However, to maintain alignment with the EHR Incentive Program, under which this measure is also available for reporting in 2015, CMS proposes to maintain this measure in PQRS for EHR reporting only, removing all other reporting options.	NCQA				X			MU2 Million Hearts
002 2/23 8	156 v2	Patient Safety	**Use of High-Risk Medications in the Elderly:** Percentage of patients 66 years of age and older who were ordered high-risk medications. Two rates are reported. a. Percentage of patients who were ordered at least one high-risk medication. b. Percentage of patients who were ordered at least two different high-risk medications. **Rationale:** CMS proposes to add registry as a reporting option for this measure to enhance reporting by more providers.	NCQA			X	X			MU2
039		Effective	**Hepatitis C: Ribonucleic Acid (RNA) Testing**	AMA-						X	

NQF/ PQRS	CMS E-Measure ID	National Quality Strategy Domain	Measure Title and Description[¥]	Measure Steward	Claims	CSV	Registry	EHR	GPRO (Web Interface)*	Measures Groups	Other Quality Reporting Programs
5 /84		Clinical Care	**Before Initiating Treatment:** Percentage of patients aged 18 years and older with a diagnosis of chronic hepatitis C who started antiviral treatment within the 12 month reporting period for whom quantitative hepatitis C virus (HCV) RNA testing was performed within 12 months prior to initiation of antiviral treatment **Rationale**: CMS proposes to make this individual measure reportable via measures group only to help mitigate the burden of eligible professionals reporting individual measures based on the current requirement of 9 measures over 3 domains. Additionally, the clinical topic of this measure contained within the Hepatitis C measures group allows CMS to evaluate patients diagnosed with Hepatitis C to be assessed in a more comprehensive manner.	PCPI							
039 6 /85		Effective Clinical Care	**Hepatitis C: HCV Genotype Testing Prior to Treatment:** Percentage of patients aged 18 years and older with a diagnosis of chronic hepatitis C who started antiviral treatment within the 12 month reporting period for whom hepatitis C virus (HCV) genotype testing was performed within 12 months prior to initiation of antiviral treatment **Rationale**: CMS proposes to make this individual measure reportable via measures group only to help mitigate the burden of eligible professionals reporting individual measures based on the current requirement of 9 measures over 3 domains. Additionally, the clinical topic of this measure contained within the Hepatitis C measures group allows CMS to evaluate patients diagnosed with Hepatitis C to be assessed in a more comprehensive manner.	AMA-PCPI						X	
039 8/87		Effective Clinical Care	**Hepatitis C: Hepatitis C Virus (HCV) Ribonucleic Acid (RNA) Testing Between 4-12 Weeks After Initiation of Treatment:** Percentage of patients aged 18 years and older with a diagnosis of chronic hepatitis C who are receiving antiviral treatment for whom quantitative hepatitis C virus (HCV) RNA testing was performed between 4-12 weeks after the initiation of antiviral treatment **Rationale**: CMS proposes to make this individual measure reportable via measures group only to help mitigate the burden of eligible professionals reporting individual measures based on the current requirement of 9 measures over 3 domains. Additionally, the clinical topic of this measure	AMA-PCPI						X	

NQF/ PQRS	CMS E-Measure ID	National Quality Strategy Domain	Measure Title and Description*	Measure Steward	Claims	CSV	Registry	EHR	GPRO (Web Interface)*	Measures Groups	Other Quality Reporting Programs
			contained within the Hepatitis C measures group allows CMS to evaluate patients diagnosed with Hepatitis C to be assessed in a more comprehensive manner.								
005 4 /108		Effective Clinical Care	**Rheumatoid Arthritis (RA): Disease Modifying Anti-Rheumatic Drug (DMARD) Therapy:** Percentage of patients aged 18 years and older who were diagnosed with RA and were prescribed, dispensed, or administered at least one ambulatory prescription for a DMARD **Rationale**: CMS proposes to make this individual measure reportable via measures group only to help mitigate the burden of eligible professionals reporting individual measures based on the current requirement of 9 measures over 3 domains. Additionally, the clinical topic of this measure contained within the Rheumatoid Arthritis measures group allows CMS to evaluate patients diagnosed with Rheumatoid Arthritis to be assessed in a more comprehensive manner.	NCQA						X	
040 5 /160	52v 2	Effective Clinical Care	**HIV/AIDS: Pneumocystis Jiroveci Pneumonia (PCP) Prophylaxis:** Percentage of patients aged 6 weeks and older with a diagnosis of HIV/AIDS who were prescribed Pneumocystis Jiroveci Pneumonia (PCP) prophylaxis **Rationale**: CMS proposes to make this individual measure reportable via measures group only to help mitigate the burden of eligible professionals reporting individual measures based on the current requirement of 9 measures over 3 domains. Additionally, the clinical topic of this measure contained within the HIV/AIDS measures group allows CMS to evaluate patients diagnosed with HIV/AIDS to be assessed in a more comprehensive manner.	NCQA						X	MU2
AQ A Ado pted /176		Effective Clinical Care	**Rheumatoid Arthritis (RA): Tuberculosis Screening:** Percentage of patients aged 18 years and older with a diagnosis of rheumatoid arthritis (RA) who have documentation of a tuberculosis (TB) screening performed and results interpreted within 6 months prior to receiving a first course of therapy using a biologic disease-modifying anti-rheumatic drug (DMARD) **Rationale**: CMS proposes to make this individual measure reportable via measures group only to help mitigate the burden of eligible professionals reporting individual measures based on the current requirement of 9 measures over 3 domains. Additionally, the clinical topic of this measure	AMA-PCPI						X	AQA

NQF/ PQRS	CMS E-Measure ID	National Quality Strategy Domain	Measure Title and Description[¥]	Measure Steward	Claims	CSV	Registry	EHR	GPRO (Web Interface)*	Measures Groups	Other Quality Reporting Programs
			contained within the Rheumatoid Arthritis measures group allows CMS to evaluate patients diagnosed with Rheumatoid Arthritis to be assessed in a more comprehensive manner.								
AQA Adopted /177		Effective Clinical Care	**Rheumatoid Arthritis (RA): Periodic Assessment of Disease Activity:** Percentage of patients aged 18 years and older with a diagnosis of rheumatoid arthritis (RA) who have an assessment and classification of disease activity within 12 months **Rationale**: CMS proposes to make this individual measure reportable via measures group only to help mitigate the burden of eligible professionals reporting individual measures based on the current requirement of 9 measures over 3 domains. Additionally, the clinical topic of this measure contained within the Rheumatoid Arthritis measures group allows CMS to evaluate patients diagnosed with Rheumatoid Arthritis to be assessed in a more comprehensive manner.	AMA-PCPI						X	AQA
AQA Adopted /179		Effective Clinical Care	**Rheumatoid Arthritis (RA): Assessment and Classification of Disease Prognosis:** Percentage of patients aged 18 years and older with a diagnosis of rheumatoid arthritis (RA) who have an assessment and classification of disease prognosis at least once within 12 months **Rationale**: CMS proposes to make this individual measure reportable via measures group only to help mitigate the burden of eligible professionals reporting individual measures based on the current requirement of 9 measures over 3 domains. Additionally, the clinical topic of this measure contained within the Rheumatoid Arthritis measures group allows CMS to evaluate patients diagnosed with Rheumatoid Arthritis to be assessed in a more comprehensive manner.	AMA-PCPI						X	AQA
AQA Adopted /180		Effective Clinical Care	**Rheumatoid Arthritis (RA): Glucocorticoid Management:** Percentage of patients aged 18 years and older with a diagnosis of rheumatoid arthritis (RA) who have been assessed for glucocorticoid use and, for those on prolonged doses of prednisone ≥ 10 mg daily (or equivalent) with improvement or no change in disease activity, documentation of glucocorticoid management plan within 12 months **Rationale**: CMS proposes to make this individual measure reportable via measures group only to help mitigate the burden of eligible professionals reporting individual measures based on the current	AMA-PCPI						X	AQA

NQF/ PQRS	CMS E-Measure ID	National Quality Strategy Domain	Measure Title and Description[¥]	Measure Steward	Claims	CSV	Registry	EHR	GPRO (Web Interface)*	Measures Groups	Other Quality Reporting Programs
			requirement of 9 measures over 3 domains. Additionally, the clinical topic of this measure contained within the Rheumatoid Arthritis measures group allows CMS to evaluate patients diagnosed with Rheumatoid Arthritis to be assessed in a more comprehensive manner.								
039 9 /183		Community/ Population Health	**Hepatitis C: Hepatitis A Vaccination in Patients with Hepatitis C Virus (HCV):** Percentage of patients aged 18 years and older with a diagnosis of chronic hepatitis C who have received at least one injection of hepatitis A vaccine, or who have documented immunity to hepatitis A **Rationale**: CMS proposes to make this individual measure reportable via measures group only to help mitigate the burden of eligible professionals reporting individual measures based on the current requirement of 9 measures over 3 domains. Additionally, the clinical topic of this measure contained within the Hepatitis C measures group allows CMS to evaluate patients diagnosed with Hepatitis C to be assessed in a more comprehensive manner.	AMA-PCPI						X	
040 9 /205		Effective Clinical Care	**HIV/AIDS: Sexually Transmitted Disease Screening for Chlamydia, Gonorrhea, and Syphilis:** Percentage of patients aged 13 years and older with a diagnosis of HIV/AIDS for whom chlamydia, gonorrhea and syphilis screenings were performed at least once since the diagnosis of HIV infection **Rationale**: CMS proposes to make this individual measure reportable via measures group only to help mitigate the burden of eligible professionals reporting individual measures based on the current requirement of 9 measures over 3 domains. Additionally, the clinical topic of this measure contained within the HIV/AIDS measures group allows CMS to evaluate patients diagnosed with HIV/AIDS to be assessed in a more comprehensive manner.	AMA-PCPI						X	
208 2 /338		Effective Clinical Care	**HIV Viral Load Suppression:** The percentage of patients, regardless of age, with a diagnosis of HIV with a HIV viral load less than 200 copies/mL at last viral load test during the measurement year **Rationale**: CMS proposes to make this individual measure reportable via measures group only to help mitigate the burden of eligible professionals reporting individual measures based on the current requirement of 9 measures over 3 domains. Additionally, the clinical topic of this measure	HRSA						X	

NQF/ PQRS	CMS E-Measure ID	National Quality Strategy Domain	Measure Title and Description[¥]	Measure Steward	Claims	CSV	Registry	EHR	GPRO (Web Interface)*	Measures Groups	Other Quality Reporting Programs
			contained within the HIV/AIDS measures group allows CMS to evaluate patients diagnosed with HIV/AIDS to be assessed in a more comprehensive manner.								
208 3 /339		Effective Clinical Care	**Prescription of HIV Antiretroviral Therapy:** Percentage of patients, regardless of age, with a diagnosis of HIV prescribed antiretroviral therapy for the treatment of HIV infection during the measurement year **Rationale**: CMS proposes to make this individual measure reportable via measures group only to help mitigate the burden of eligible professionals reporting individual measures based on the current requirement of 9 measures over 3 domains. Additionally, the clinical topic of this measure contained within the HIV/AIDS measures group allows CMS to evaluate patients diagnosed with HIV/AIDS to be assessed in a more comprehensive manner.	HRSA						X	
207 9 /340		Efficiency and Cost Reduction	**HIV Medical Visit Frequency:** Percentage of patients, regardless of age with a diagnosis of HIV who had at least one medical visit in each 6 month period of the 24 month measurement period, with a minimum of 60 days between medical visits **Rationale**: CMS proposes to make this individual measure reportable via measures group only to help mitigate the burden of eligible professionals reporting individual measures based on the current requirement of 9 measures over 3 domains. Additionally, the clinical topic of this measure contained within the HIV/AIDS measures group allows CMS to evaluate patients diagnosed with HIV/AIDS to be assessed in a more comprehensive manner.	HRSA						X	

¥ Measure details including titles, descriptions and measure owner information may vary during a particular program year. This is due to the timing of measure specification preparation and the measure versions used by the various reporting options/methods. Please refer to the measure specifications that apply for each of the reporting options/methods for specific measure details.

BILLING CODE 4120–01–C

We seek comment on these proposals.

d. PQRS Measures Groups

Section 414.90(b) defines a measures group as a subset of four or more Physician Quality Reporting System measures that have a particular clinical condition or focus in common. The denominator definition and coding of the measures group identifies the condition or focus that is shared across the measures within a particular measures group.

In the CY 2014 PFS proposed rule, we proposed (78 FR 43448) to increase the number of measures that may be included in a measures group from a minimum of 4 measures to a minimum of 6. We proposed increasing the minimum number of measures that may be contained in a measures group in accordance with increasing the number of individual measures to be reported via claims and registry. However, we did not finalize this proposal, stating that, although we still plan to increase the minimum number of measures in a measures group in the future, we would work with the measure developers and owners of these measures groups to appropriately add measures to measures groups that only contain four measures within the measures group (78 FR 74730). We have worked with the measure owners and developers and are again proposing to increase the number of measures that may be included in a measures group from a minimum of 4 measures to a minimum of 6.

Specifically, we are proposing to modify section 414.90(b) to define a measures group as a subset of six or more Physician Quality Reporting System measures that have a particular clinical condition or focus in common.

In addition, we are proposing two new measures groups that will be available for reporting in the PQRS beginning in 2015:

- *The sinusitis measures group:* We are proposing a new sinusitis measures group because this measures group represents a clinical gap within the measure group reporting option. The measures in the sinusitis measures group reflect a variety of measure types, and make up a clinically coherent and meaningful set of measures.
- *The Acute Otits Externa (AOE) measures group:* We are proposing the addition of the AOE measures group, as it focuses on the quality of care of patients with AOE by combining existing disease-specific measures with relevant cross-cutting (generic) measures.

Furthermore, we are proposing to remove the following measures groups for reporting beginning in 2015 for the following reasons:

- *Perioperative care measures group:* We are proposing to remove the perioperative care measures group from reporting in the PQRS beginning in 2015 because this measures group does not add value to the PQRS and eligible professionals are consistently meeting performance on this measure with performance rates close to 100 percent.
- *Back pain measures group:* We are proposing to remove the back pain measures group because the measure steward is not preparing these measures for re-endorsement by the National Quality Forum. We are also proposing to remove the measures group because it reflects clinical concepts that do not add clinical value to PQRS. Specifically, the measures in this group are entirely clinical process measures that do not meaningfully contribute to improved patient outcomes.
- *Cardiovascular prevention measures group:* We are proposing to remove the cardiovascular prevention measures group because a number of individual measures contained in this measures group are proposed to be removed from all PQRS program reporting options with the exception of EHR reporting.
- *Ischemic Vascular Disease (IVD) measures group:* We are proposing to remove the IVD measures group because a number of individual measures contained in this measures group are proposed to be removed from all PQRS program reporting options with the exception of EHR reporting.
- *Sleep Apnea measures group:* We are proposing to remove the Sleep Apnea measures group from reporting in the PQRS beginning in 2015 because, for a number of measures included in this group, the measure steward has indicated they will no longer maintain those measures. Those measures and their associated measure groups are proposed for removal from the program. As a result, the measures group would have less than the 6 measures proposed to be required in a measures group. Please note that this proposal is contingent on the measure steward not being able to maintain ownership of certain measures. Should we learn that a measure owner/developer is able to maintain certain measures, or that another entity is able to maintain certain measures, such that the measure group maintains a sufficient number of measures for reporting under the PQRS for the CY 2017 PQRS payment adjustment, we propose to keep the measure group available for reporting under the PQRS and therefore not finalize our proposal to remove the measure group.
- *Chronic obstructive pulmonary disease (COPD) measures group:* We are proposing to remove the COPD measures group from reporting in the PQRS beginning in 2015 because, for a number of measures included in this group, the measure steward has indicated they will no longer maintain those measures. Those measures and their associated measure groups are proposed for removal from the program. As a result, the measures group would have less than the 6 measures proposed to be required in a measures group. Please note that this proposal is contingent on the measure steward not being able to maintain ownership of certain measures. Should we learn that a measure owner/developer is able to maintain certain measures, or that another entity is able to maintain certain measures, such that the measure group maintains a sufficient number of measures for reporting under the PQRS for the CY 2017 PQRS payment adjustment, we propose to keep the measure group available for reporting under the PQRS and therefore not finalize our proposal to remove the measure group.

Tables 26 through 48 specify our proposed measures groups in light of our proposal to increase the minimum number of measures in a measures group in previously established measures groups, so that each measures group contains at least 6 measures. We invite public comment on these proposals.

TABLE 26—PROPOSED ASTHMA MEASURES GROUP FOR 2015 AND BEYOND

NQF/ PQRS	Measure title and description	Measure developer
0047/053	Asthma: Pharmacologic Therapy for Persistent Asthma—Ambulatory Care Setting: Percentage of patients aged 5 through 64 years with a diagnosis of persistent asthma who were prescribed long-term control medication.	AMA–PCPI/NCQA

TABLE 26—PROPOSED ASTHMA MEASURES GROUP FOR 2015 AND BEYOND—Continued

NQF/ PQRS	Measure title and description	Measure developer
0041/110	Preventive Care and Screening: Influenza Immunization: Percentage of patients aged 6 months and older seen for a visit between October 1 and March 31 who received an influenza immunization OR who reported previous receipt of an influenza immunization.	AMA–PCPI
0419/130	Documentation of Current Medications in the Medical Record: Percentage of visits for patients aged 18 years and older for which the eligible professional attests to documenting a list of current medications using all immediate resources available on the date of the encounter. This list must include ALL known prescriptions, over-the-counters, herbals, and vitamin/mineral/dietary (nutritional) supplements AND must contain the medications' name, dosage, frequency and route of administration.	CMS/QIP
0028/226	Preventive Care and Screening: Tobacco Use: Screening and Cessation Intervention: Percentage of patients aged 18 years and older who were screened for tobacco use one or more times within 24 months AND who received cessation counseling intervention if identified as a tobacco user.	AMA–PCPI
N/A/N/A	Tobacco Use and Help with Quitting Among Adolescents: Percentage of adolescents 13 to 20 years of age with a primary care visit during the measurement period for whom tobacco use status was documented and received help quitting if identified as a tobacco user.	NCQA/NCIQM
0421/128	Preventive Care and Screening: Body Mass Index (BMI) Screening and Follow-Up: Percentage of patients aged 18 years and older with a documented BMI during the current encounter or during the previous 6 months AND when the BMI is outside of normal parameters, a follow-up plan is documented during the encounter or during the previous 6 months of the encounter. Normal Parameters: Age 65 years and older BMI ≥ 23 and < 30; Age 18–64 years BMI ≥ 18.5 and < 25.	CMS/QIP

TABLE 27—PROPOSED ACUTE OTITIS EXTERNA (AOE) MEASURES GROUP FOR 2015 AND BEYOND

NQF/ PQRS	Measure title and description	Measure developer
0653/091	Acute Otitis Externa (AOE): Topical Therapy: Percentage of patients aged 2 years and older with a diagnosis of AOE who were prescribed topical preparations.	AMA–PCPI
0654/093	Acute Otitis Externa (AOE): Systemic Antimicrobial Therapy—Avoidance of Inappropriate Use: Percentage of patients aged 2 years and older with a diagnosis of AOE who were not prescribed systemic antimicrobial therapy.	AMA–PCPI
0419/130	Documentation of Current Medications in the Medical Record: Percentage of visits for patients aged 18 years and older for which the eligible professional attests to documenting a list of current medications using all immediate resources available on the date of the encounter. This list must include ALL known prescriptions, over-the-counters, herbals, and vitamin/mineral/dietary (nutritional) supplements AND must contain the medications' name, dosage, frequency and route of administration.	CMS/QIP
0420/131	Pain Assessment and Follow-Up: Percentage of visits for patients aged 18 years and older with documentation of a pain assessment using a standardized tool(s) on each visit AND documentation of a follow-up plan when pain is present.	CMS/QIP
0101/154	Falls: Risk Assessment: Percentage of patients aged 65 years and older with a history of falls who had a risk assessment for falls completed within 12 months.	AMA–PCPI
0101/155	Falls: Plan of Care: Percentage of patients aged 65 years and older with a history of falls who had a plan of care for falls documented within 12 months.	AMA–PCPI
0028/226	Preventive Care and Screening: Tobacco Use: Screening and Cessation Intervention: Percentage of patients 18 years and older who were screened for tobacco use one or more times within 24 months AND who received cessation counseling intervention if identified as a tobacco user.	AMA–PCPI
N/A/317	Preventive Care and Screening: Screening for High Blood Pressure and Follow-Up Documented: Percentage of patients aged 18 years and older seen during the reporting period who were screened for high blood pressure (BP) AND a recommended follow-up plan is documented based on the current blood pressure reading as indicated.	CMS/QIP

TABLE 28—PROPOSED CATARACTS MEASURES GROUP FOR 2015 AND BEYOND

NQF/ PQRS	Measure title and description	Measure developer
0419/130	Documentation of Current Medications in the Medical Record: Percentage of visits for patients aged 18 years and older for which the eligible professional attests to documenting a list of current medications using all immediate resources available on the date of the encounter. This list must include ALL known prescriptions, over-the-counters, herbals, and vitamin/mineral/dietary (nutritional) supplements AND must contain the medications' name, dosage, frequency and route of administration.	CMS/QIP
0565/191	Cataracts: 20/40 or Better Visual Acuity within 90 Days Following Cataract Surgery: Percentage of patients aged 18 years and older with a diagnosis of uncomplicated cataract who had cataract surgery and no significant ocular conditions impacting the visual outcome of surgery and had best-corrected visual acuity of 20/40 or better (distance or near) achieved within 90 days following the cataract surgery.	AMA–PCPI/NCQA

TABLE 28—PROPOSED CATARACTS MEASURES GROUP FOR 2015 AND BEYOND—Continued

NQF/ PQRS	Measure title and description	Measure developer
0564/192	Cataracts: Complications within 30 Days Following Cataract Surgery Requiring Additional Surgical Procedures: Percentage of patients aged 18 years and older with a diagnosis of uncomplicated cataract who had cataract surgery and had any of a specified list of surgical procedures in the 30 days following cataract surgery which would indicate the occurrence of any of the following major complications: retained nuclear fragments, endophthalmitis, dislocated or wrong power IOL, retinal detachment, or wound dehiscence.	AMA–PCPI/NCQA
0028/226	Preventive Care and Screening: Tobacco Use: Screening and Cessation Intervention: Percentage of patients 18 years and older who were screened for tobacco use one or more times within 24 months AND who received cessation counseling intervention if identified as a tobacco user.	AMA–PCPI
N/A/303	Cataracts: Improvement in Patient's Visual Function within 90 Days Following Cataract Surgery: Percentage of patients aged 18 years and older in sample who had cataract surgery and had improvement in visual function achieved within 90 days following the cataract surgery, based on completing a pre-operative and post-operative visual function survey.	AAO
N/A/304	Cataracts: Patient Satisfaction within 90 Days Following Cataract Surgery: Percentage of patients aged 18 years and older in sample who had cataract surgery and were satisfied with their care within 90 days following the cataract surgery, based on completion of the Consumer Assessment of Healthcare Providers and Systems Surgical Care Survey.	AAO
N/A/358	Patient-Centered Surgical Risk Assessment and Communication: Percentage of patients who underwent a non-emergency surgery who had their personalized risks of postoperative complications assessed by their surgical team prior to surgery using a clinical data-based, patient-specific risk calculator and who received personal discussion of those risks with the surgeon.	ACS
N/A/N/A	Cataract Surgery with Intra-Operative Complications (Unplanned Rupture of Posterior Capsule requiring unplanned vitrectomy): Rupture of the posterior capsule during anterior segment surgery requiring vitrectomy.	AAEECE/ACHS
N/A/N/A	Cataract Surgery: Difference Between Planned and Final Refraction: Percentage of patients who achieve planned refraction within $+-1,0$ D.	AAEECE/ACHS

TABLE 29—PROPOSED CHRONIC KIDNEY DISEASE (CKD) MEASURES GROUP FOR 2015 AND BEYOND

NQF/ PQRS	Measure title and description	Measure developer
0326/047	Care Plan: Percentage of patients aged 65 years and older who have an care plan or surrogate decision maker documented in the medical record or documentation in the medical record that an care plan was discussed but the patient did not wish or was not able to name a surrogate decision maker or provide an care plan.	AMA–PCPI/NCQA
0041/110	Preventive Care and Screening: Influenza Immunization: Percentage of patients aged 6 months and older seen for a visit between October 1 and March 31 who received an influenza immunization OR who reported previous receipt of an influenza immunization.	AMA–PCPI
1668/121	Adult Kidney Disease: Laboratory Testing (Lipid Profile): Percentage of patients aged 18 years and older with a diagnosis of chronic kidney disease (CKD) (stage 3, 4, or 5, not receiving Renal Replacement Therapy [RRT]) who had a fasting lipid profile performed at least once within a 12-month period.	AMA–PCPI
N/A/122	Adult Kidney Disease: Blood Pressure Management: Percentage of patient visits for those patients aged 18 years and older with a diagnosis of chronic kidney disease (CKD) (stage 3, 4, or 5, not receiving Renal Replacement Therapy [RRT]) and proteinuria with a blood pressure < 130/80 mmHg OR ≥ 130/80 mmHg with a documented plan of care.	AMA–PCPI
0419/130	Documentation of Current Medications in the Medical Record: Percentage of visits for patients aged 18 years and older for which the eligible professional attests to documenting a list of current medications using all immediate resources available on the date of the encounter. This list must include ALL known prescriptions, over-the-counters, herbals, and vitamin/mineral/dietary (nutritional) supplements AND must contain the medications' name, dosage, frequency and route of administration.	CMS/QIP
0028/226	Preventive Care and Screening: Tobacco Use: Screening and Cessation Intervention: Percentage of patients 18 years and older who were screened for tobacco use one or more times within 24 months AND who received cessation counseling intervention if identified as a tobacco user.	AMA–PCPI

TABLE 30—PROPOSED CHRONIC OBSTRUCTIVE PULMONARY DISORDER (COPD) MEASURES GROUP FOR 2015 AND BEYOND

[Please note that we are proposing to remove this measure group contingent on the measure steward not being able to maintain certain measures contained in these measures group. If a measure steward is able to maintain ownership of these measures, we plan to keep this measures group in the PQRS measure set. This Table Q10 indicates the measures that we propose will be available in this measures group should we keep this measures group in the PQRS measure set.]

NQF/ PQRS	Measure title and description	Measure developer
0326/047	Care Plan: Percentage of patients aged 65 years and older who have an care plan or surrogate decision maker documented in the medical record or documentation in the medical record that an care plan was discussed but the patient did not wish or was not able to name a surrogate decision maker or provide an care plan.	AMA–PCPI/NCQA
0091/051	Chronic Obstructive Pulmonary Disease (COPD): Spirometry Evaluation: Percentage of patients aged 18 years and older with a diagnosis of COPD who had spirometry evaluation results documented.	AMA–PCPI
0102/052	Chronic Obstructive Pulmonary Disease (COPD): Inhaled Bronchodilator Therapy: Percentage of patients aged 18 years and older with a diagnosis of COPD and who have an FEV1/FVC less than 60% and have symptoms who were prescribed an inhaled bronchodilator.	AMA–PCPI
0041/110	Preventive Care and Screening: Influenza Immunization: Percentage of patients aged 6 months and older seen for a visit between October 1 and March 31 who received an influenza immunization OR who reported previous receipt of an influenza immunization.	AMA–PCPI
0043/111	Pneumonia Vaccination Status for Older Adults: Percentage of patients 65 years of age and older who have ever received a pneumococcal vaccine.	NCQA
0419/130	Documentation of Current Medications in the Medical Record: Percentage of visits for patients aged 18 years and older for which the eligible professional attests to documenting a list of current medications using all immediate resources available on the date of the encounter. This list must include ALL known prescriptions, over-the-counters, herbals, and vitamin/mineral/dietary (nutritional) supplements AND must contain the medications' name, dosage, frequency and route of administration.	CMS/QIP
0028/226	Preventive Care and Screening: Tobacco Use: Screening and Cessation Intervention: Percentage of patients 18 years and older who were screened for tobacco use one or more times within 24 months AND who received cessation counseling intervention if identified as a tobacco user.	AMA–PCPI

TABLE 31—PROPOSED CORONARY ARTERY BYPASS GRAFT (CABG) MEASURES GROUP FOR 2015 AND BEYOND

NQF/ PQRS	Measure title and description	Measure developer
0134/043	Coronary Artery Bypass Graft (CABG): Use of Internal Mammary Artery (IMA) in Patients with Isolated CABG Surgery: Percentage of patients aged 18 years and older undergoing isolated CABG surgery who received an IMA graft.	STS
0236/044	Coronary Artery Bypass Graft (CABG): Preoperative Beta-Blocker in Patients with Isolated CABG Surgery: Percentage of isolated Coronary Artery Bypass Graft (CABG) surgeries for patients aged 18 years and older who received a beta-blocker within 24 hours prior to surgical incision.	CMS/QIP
0129/164	Coronary Artery Bypass Graft (CABG): Prolonged Intubation: Percentage of patients aged 18 years and older undergoing isolated CABG surgery who require postoperative intubation > 24 hours.	STS
0130/165	Coronary Artery Bypass Graft (CABG): Deep Sternal Wound Infection Rate: Percentage of patients aged 18 years and older undergoing isolated CABG surgery who, within 30 days postoperatively, develop deep sternal wound infection involving muscle, bone, and/or mediastinum requiring operative intervention.	STS
0131/166	Coronary Artery Bypass Graft (CABG): Stroke: Percentage of patients aged 18 years and older undergoing isolated CABG surgery who have a postoperative stroke (i.e., any confirmed neurological deficit of abrupt onset caused by a disturbance in blood supply to the brain) that did not resolve within 24 hours.	STS
0114/167	Coronary Artery Bypass Graft (CABG): Postoperative Renal Failure: Percentage of patients aged 18 years and older undergoing isolated CABG surgery (without pre-existing renal failure) who develop postoperative renal failure or require dialysis.	STS

TABLE 32—PROPOSED CORONARY ARTERY DISEASE (CAD) MEASURES GROUP FOR 2015 AND BEYOND

NQF/ PQRS	Measure title and description	Measure developer
0067/006	Coronary Artery Disease (CAD): Antiplatelet Therapy: Percentage of patients aged 18 years and older with a diagnosis of coronary artery disease seen within a 12 month period who were prescribed aspirin or clopidogrel.	AMA–PCPI/ACCF/ AHA
0070/007	Coronary Artery Disease (CAD): Beta-Blocker Therapy—Prior Myocardial Infarction (MI) or Left Ventricular Systolic Dysfunction (LVEF < 40%: Percentage of patients aged 18 years and older with a diagnosis of coronary artery disease seen within a 12 month period who also have prior MI OR a current or LVEF < 40% who were prescribed beta-blocker therapy.	AMA–PCPI

TABLE 32—PROPOSED CORONARY ARTERY DISEASE (CAD) MEASURES GROUP FOR 2015 AND BEYOND—Continued

NQF/ PQRS	Measure title and description	Measure developer
0421/128	Preventive Care and Screening: Body Mass Index (BMI) Screening and Follow-Up: Percentage of patients aged 18 years and older with a documented BMI during the current encounter or during the previous 6 months AND when the BMI is outside of normal parameters, a follow-up plan is documented during the encounter or during the previous 6 months of the encounter. Normal Parameters: Age 65 years and older BMI ≥ 23 and < 30; Age 18–64 years BMI ≥ 18.5 and < 25.	CMS/QIP
0419/130	Documentation of Current Medications in the Medical Record: Percentage of visits for patients aged 18 years and older for which the eligible professional attests to documenting a list of current medications using all immediate resources available on the date of the encounter. This list must include ALL known prescriptions, over-the-counters, herbals, and vitamin/mineral/dietary (nutritional) supplements AND must contain the medications' name, dosage, frequency and route of administration.	CMS/QIP
0028/226	Preventive Care and Screening: Tobacco Use: Screening and Cessation Intervention: Percentage of patients 18 years and older who were screened for tobacco use one or more times within 24 months AND who received cessation counseling intervention if identified as a tobacco user.	AMA–PCPI
N/A/242	Coronary Artery Disease (CAD): Symptom Management: Percentage of patients aged 18 years and older with a diagnosis of coronary artery disease seen within a 12 month period with results of an evaluation of level of activity and an assessment of whether anginal symptoms are present or absent with appropriate management of anginal symptoms within a 12 month period.	AMA–PCPI/ACCF/ AHA

TABLE 33—PROPOSED DEMENTIA MEASURES GROUP FOR 2015 AND BEYOND

NQF/ PQRS	Measure title and description	Measure developer
0326/047	Care Plan: Percentage of patients aged 65 years and older who have an care plan or surrogate decision maker documented in the medical record or documentation in the medical record that an care plan was discussed but the patient did not wish or was not able to name a surrogate decision maker or provide an care plan.	AMA–PCPI/NCQA
N/A/280	Dementia: Staging of Dementia: Percentage of patients, regardless of age, with a diagnosis of dementia whose severity of dementia was classified as mild, moderate or severe at least once within a 12 month period.	AMA–PCPI
N/A/281	Dementia: Cognitive Assessment: Percentage of patients, regardless of age, with a diagnosis of dementia for whom an assessment of cognition is performed and the results reviewed at least once within a 12 month period.	AMA–PCPI
N/A/282	Dementia: Functional Status Assessment: Percentage of patients, regardless of age, with a diagnosis of dementia for whom an assessment of functional status is performed and the results reviewed at least once within a 12 month period.	AMA–PCPI
N/A/283	Dementia: Neuropsychiatric Symptom Assessment: Percentage of patients, regardless of age, with a diagnosis of dementia and for whom an assessment of neuropsychiatric symptoms is performed and results reviewed at least once in a 12 month period.	AMA–PCPI
N/A/284	Dementia: Management of Neuropsychiatric Symptoms: Percentage of patients, regardless of age, with a diagnosis of dementia who have one or more neuropsychiatric symptoms who received or were recommended to receive an intervention for neuropsychiatric symptoms within a 12 month period.	AMA–PCPI
N/A/285	Dementia: Screening for Depressive Symptoms: Percentage of patients, regardless of age, with a diagnosis of dementia who were screened for depressive symptoms within a 12 month period.	AMA–PCPI
N/A/286	Dementia: Counseling Regarding Safety Concerns: Percentage of patients, regardless of age, with a diagnosis of dementia or their caregiver(s) who were counseled or referred for counseling regarding safety concerns within a 12 month period.	AMA–PCPI
N/A/287	Dementia: Counseling Regarding Risks of Driving: Percentage of patients, regardless of age, with a diagnosis of dementia or their caregiver(s) who were counseled regarding the risks of driving and the alternatives to driving at least once within a 12 month period.	AMA–PCPI
N/A/288	Dementia: Caregiver Education and Support: Percentage of patients, regardless of age, with a diagnosis of dementia whose caregiver(s) were provided with education on dementia disease management and health behavior changes AND referred to additional sources for support within a 12 month period.	AMA–PCPI

TABLE 34—PROPOSED DIABETES MEASURES GROUP FOR 2015 AND BEYOND

NQF/ PQRS	Measure title and description	Measure developer
0059/001	Diabetes: Hemoglobin A1c Poor Control: Percentage of patients 18–75 years of age with diabetes who had hemoglobin A1c > 9.0% during the measurement period.	NCQA
0041/110	Preventive Care and Screening: Influenza Immunization: Percentage of patients aged 6 months and older seen for a visit between October 1 and March 31 who received an influenza immunization OR who reported previous receipt of an influenza immunization.	AMA–PCPI
0055/117	Diabetes: Eye Exam: Percentage of patients 18 through 75 years of age with a diagnosis of diabetes (type 1 and type 2) who had a retinal or dilated eye exam in the measurement period or a negative retinal or dilated eye exam (negative for retinopathy) in the year prior to the measurement period.	NCQA

TABLE 34—PROPOSED DIABETES MEASURES GROUP FOR 2015 AND BEYOND—Continued

NQF/ PQRS	Measure title and description	Measure developer
0062/119	Diabetes: Medical Attention for Neuropathy: The percentage of patients 18–75 years of age with diabetes who had a nephropathy screening test or evidence of nephropathy during the measurement period.	NCQA
0056/163	Diabetes: Foot Exam: Percentage of patients aged 18–75 years of age with diabetes who had a foot exam during the measurement period.	NCQA
0028/226	Preventive Care and Screening: Tobacco Use: Screening and Cessation Intervention: Percentage of patients 18 years and older who were screened for tobacco use one or more times within 24 months AND who received cessation counseling intervention if identified as a tobacco user.	AMA–PCPI

TABLE 35—PROPOSED GENERAL SURGERY MEASURES GROUP FOR 2015 AND BEYOND

NQF/ PQRS	Measure title and description	Measure developer
0419/130	Documentation of Current Medications in the Medical Record: Percentage of visits for patients aged 18 years and older for which the eligible professional attests to documenting a list of current medications using all immediate resources available on the date of the encounter. This list must include ALL known prescriptions, over-the-counters, herbals, and vitamin/mineral/dietary (nutritional) supplements AND must contain the medications' name, dosage, frequency and route of administration.	CMS/QIP
0028/226	Preventive Care and Screening: Tobacco Use: Screening and Cessation Intervention: Percentage of patients 18 years and older who were screened for tobacco use one or more times within 24 months AND who received cessation counseling intervention if identified as a tobacco user.	AMA–PCPI
N/A/354	Anastomotic Leak Intervention: Percentage of patients aged 18 years and older who required an anastomotic leak intervention following gastric bypass or colectomy surgery.	ACS
N/A/355	Unplanned Reoperation within the 30 Day Postoperative Period: Percentage of patients aged 18 years and older who had any unplanned reoperation within the 30 day postoperative period.	ACS
N/A/356	Unplanned Hospital Readmission within 30 Days of Principal Procedure: Percentage of patients aged 18 years and older who had an unplanned hospital readmission within 30 days of principal procedure.	ACS
N/A/357	Surgical Site Infection (SSI): Percentage of patients aged 18 years and older who had a surgical site infection (SSI).	ACS
N/A/358	Patient-Centered Surgical Risk Assessment and Communication: Percentage of patients who underwent a non-emergency surgery who had their personalized risks of postoperative complications assessed by their surgical team prior to surgery using a clinical data-based, patient-specific risk calculator and who received personal discussion of those risks with the surgeon.	ACS

TABLE 36—PROPOSED HEART FAILURE (HF) MEASURES GROUP FOR 2015 AND BEYOND

NQF/ PQRS	Measure title and description	Measure developer
0081/005	Heart Failure (HF): Angiotensin-Converting Enzyme (ACE) Inhibitor or Angiotensin Receptor Blocker (ARB) Therapy for Left Ventricular Systolic Dysfunction (LVSD): Percentage of patients aged 18 years and older with a diagnosis of heart failure (HF) with a current or prior left ventricular ejection fraction (LVEF) < 40% who were prescribed ACE inhibitor or ARB therapy either within a 12 month period when seen in the outpatient setting OR at each hospital discharge.	AMA–PCPI/ACCF/AHA
0083/008	Heart Failure (HF): Beta-Blocker Therapy for Left Ventricular Systolic Dysfunction (LVSD): Percentage of patients aged 18 years and older with a diagnosis of heart failure (HF) with a current or prior left ventricular ejection fraction (LVEF) < 40% who were prescribed beta-blocker therapy either within a 12 month period when seen in the outpatient setting OR at each hospital discharge.	AMA–PCPI/ACCF/AHA
0326/047	Care Plan: Percentage of patients aged 65 years and older who have an care plan or surrogate decision maker documented in the medical record or documentation in the medical record that an care plan was discussed but the patient did not wish or was not able to name a surrogate decision maker or provide an care plan.	AMA–PCPI/NCQA
0041/110	Preventive Care and Screening: Influenza Immunization: Percentage of patients aged 6 months and older seen for a visit between October 1 and March 31 who received an influenza immunization OR who reported previous receipt of an influenza immunization.	AMA–PCPI
0419/130	Documentation of Current Medications in the Medical Record: Percentage of visits for patients aged 18 years and older for which the eligible professional attests to documenting a list of current medications using all immediate resources available on the date of the encounter. This list must include ALL known prescriptions, over-the-counters, herbals, and vitamin/mineral/dietary (nutritional) supplements AND must contain the medications' name, dosage, frequency and route of administration.	CMS/QIP
0028/226	Preventive Care and Screening: Tobacco Use: Screening and Cessation Intervention: Percentage of patients 18 years and older who were screened for tobacco use one or more times within 24 months AND who received cessation counseling intervention if identified as a tobacco user.	AMA–PCPI

TABLE 37—PROPOSED HEPATITIS C MEASURES GROUP FOR 2015 AND BEYOND

NQF/ PQRS	Measure title and description	Measure developer
0395/084	Hepatitis C: Ribonucleic Acid (RNA) Testing Before Initiating Treatment: Percentage of patients aged 18 years and older with a diagnosis of chronic hepatitis C who started antiviral treatment within the 12 month reporting period for whom quantitative hepatitis C virus (HCV) RNA testing was performed within 12 months prior to initiation of antiviral treatment.	AMA–PCPI
0396/085	Hepatitis C: HCV Genotype Testing Prior to Treatment: Percentage of patients aged 18 years and older with a diagnosis of chronic hepatitis C who started antiviral treatment within the 12 month reporting period for whom hepatitis C virus (HCV) genotype testing was performed within 12 months prior to initiation of antiviral treatment.	AMA–PCPI
0398/087	Hepatitis C: Hepatitis C Virus (HCV) Ribonucleic Acid (RNA) Testing Between 4–12 Weeks After Initiation of Treatment: Percentage of patients aged 18 years and older with a diagnosis of chronic hepatitis C who are receiving antiviral treatment for whom quantitative hepatitis C virus (HCV) RNA testing was performed between 4–12 weeks after the initiation of antiviral treatment.	AMA–PCPI
0419/130	Documentation of Current Medications in the Medical Record: Percentage of visits for patients aged 18 years and older for which the eligible professional attests to documenting a list of current medications using all immediate resources available on the date of the encounter. This list must include ALL known prescriptions, over-the-counters, herbals, and vitamin/mineral/dietary (nutritional) supplements AND must contain the medications' name, dosage, frequency and route of administration.	CMS/QIP
0399/183	Hepatitis C: Hepatitis A Vaccination in Patients with Hepatitis C Virus (HCV): Percentage of patients aged 18 years and older with a diagnosis of chronic hepatitis C who have received at least one injection of hepatitis A vaccine, or who have documented immunity to hepatitis A.	AMA–PCPI
0028/226	Preventive Care and Screening: Tobacco Use: Screening and Cessation Intervention: Percentage of patients 18 years and older who were screened for tobacco use one or more times within 24 months AND who received cessation counseling intervention if identified as a tobacco user.	AMA–PCPI
N/A/N/A	Screening for Hepatocellular Carcinoma (HCC) in patients with Hepatitis C Cirrhosis: Percentage of patients aged 18 years and older with a diagnosis of chronic hepatitis C cirrhosis who were screened with either ultrasound, triple-contrast CT or triple-contrast MRI for hepatocellular carcinoma (HCC) at least once within the 12 month reporting period.	AGA/AASLD/AMA–PCPI
N/A/N/A	Discussion and Shared Decision Making Surrounding Treatment Options: Percentage of patients aged 18 years and older with a diagnosis of hepatitis C with whom a physician or other clinician reviewed the range of treatment options appropriate to their genotype and demonstrated a shared decision making approach with the patient. To meet the measure, there must be documentation in the patient record of a discussion between the physician/clinician and the patient that includes all of the following: • Treatment choices appropriate to genotype • Risks and benefits • Evidence of effectiveness • Patient preferences toward the outcome of the treatment	AGA/AASLD/AMA–PCPI

TABLE 38—PROPOSED HIV/AIDS MEASURES GROUP FOR 2015 AND BEYOND

NQF/ PQRS	Measure title and description	Measure developer
0326/047	Care Plan: Percentage of patients aged 65 years and older who have an care plan or surrogate decision maker documented in the medical record or documentation in the medical record that an care plan was discussed but the patient did not wish or was not able to name a surrogate decision maker or provide an care plan.	AMA–PCPI/NCQA
0418/134	Preventive Care and Screening: Screening for Clinical Depression and Follow-Up Plan: Percentage of patients aged 12 years and older screened for clinical depression on the date of the encounter using an age appropriate standardized depression screening tool AND if positive, a follow-up plan is documented on the date of the positive screen.	CMS/QIP
0405/160	HIV/AIDS: Pneumocystis Jiroveci Pneumonia (PCP) Prophylaxis: Percentage of patients aged 6 weeks and older with a diagnosis of HIV/AIDS who were prescribed Pneumocystis Jiroveci Pneumonia (PCP) prophylaxis.	NCQA
0409/205	HIV/AIDS: Sexually Transmitted Disease Screening for Chlamydia, Gonorrhea, and Syphilis: Percentage of patients aged 13 years and older with a diagnosis of HIV/AIDS for whom chlamydia, gonorrhea and syphilis screenings were performed at least once since the diagnosis of HIV infection.	AMA–PCPI/NCQA
0028/226	Preventive Care and Screening: Tobacco Use: Screening and Cessation Intervention: Percentage of patients aged 18 years and older who were screened for tobacco use one or more times within 24 months AND who received cessation counseling intervention if identified as a tobacco user.	AMA–PCPI
2082/338	HIV Viral Load Suppression: The percentage of patients, regardless of age, with a diagnosis of HIV with a HIV viral load less than 200 copies/mL at last HIV viral load test during the measurement year.	HRSA
2083/339	Prescription of HIV Antiretroviral Therapy: Percentage of patients, regardless of age, with a diagnosis of HIV prescribed antiretroviral therapy for the treatment of HIV infection during the measurement year.	HRSA
2079/340	HIV Medical Visit Frequency: Percentage of patients, regardless of age with a diagnosis of HIV who had at least one medical visit in each 6 month period of the 24 month measurement period, with a minimum of 60 days between medical visits.	HRSA

TABLE 39—PROPOSED INFLAMMATORY BOWEL DISEASE (IBD) MEASURES GROUP FOR 2015 AND BEYOND

NQF/ PQRS	Measure title and description	Measure developer
0028/226	Preventive Care and Screening: Tobacco Use: Screening and Cessation Intervention: Percentage of patients 18 years and older who were screened for tobacco use one or more times within 24 months AND who received cessation counseling intervention if identified as a tobacco user.	AMA–PCPI
N/A/270	Inflammatory Bowel Disease (IBD): Preventive Care: Corticosteroid Sparing Therapy: Percentage of patients aged 18 years and older with a diagnosis of inflammatory bowel disease who have been managed by corticosteroids greater than or equal to 10 mg/day for 60 or greater consecutive days that have been prescribed corticosteroid sparing therapy in the last reporting year.	AGA
N/A/271	Inflammatory Bowel Disease (IBD): Preventive Care: Corticosteroid Related Iatrogenic Injury—Bone Loss Assessment: Percentage of patients aged 18 years and older with a diagnosis of inflammatory bowel disease who have received dose of corticosteroids greater than or equal to 10 mg/day for 60 or greater consecutive days and were assessed for risk of bone loss once per the reporting year.	AGA
0041/110	Preventive Care and Screening: Influenza Immunization: Percentage of patients aged 6 months and older seen for a visit between October 1 and March 31 who received an influenza immunization OR who reported previous receipt of an influenza immunization.	AMA–PCPI
0043/111	Pneumonia Vaccination Status for Older Adults: Percentage of patients 65 years of age and older who have ever received a pneumococcal vaccine.	NCQA
N/A/274	Inflammatory Bowel Disease (IBD): Testing for Latent Tuberculosis (TB) Before Initiating Anti-TNF (Tumor Necrosis Factor) Therapy: Percentage of patients aged 18 years and older with a diagnosis of inflammatory bowel disease for whom a tuberculosis (TB) screening was performed and results interpreted within 6 months prior to receiving a first course of anti-TNF (tumor necrosis factor) therapy.	AGA
N/A/275	Inflammatory Bowel Disease (IBD): Assessment of Hepatitis B Virus (HBV) Status Before Initiating Anti-TNF (Tumor Necrosis Factor) Therapy: Percentage of patients aged 18 years and older with a diagnosis of inflammatory bowel disease (IBD) who had Hepatitis B Virus (HBV) status assessed and results interpreted within 1 year prior to receiving a first course of anti-TNF (tumor necrosis factor) therapy.	AGA

TABLE 40—PROPOSED ONCOLOGY MEASURES GROUP FOR 2015 AND BEYOND

NQF/ PQRS	Measure title and description	Measure developer
0387/071	Breast Cancer: Hormonal Therapy for Stage IC–IIIC Estrogen Receptor/Progesterone Receptor (ER/PR) Positive Breast Cancer: Percentage of female patients aged 18 years and older with Stage IC through IIIC, ER or PR positive breast cancer who were prescribed tamoxifen or aromatase inhibitor (AI) during the 12-month reporting period.	AMA–PCPI/ASCO/NCCN
0385/072	Colon Cancer: Chemotherapy for AJCC Stage III Colon Cancer Patients: Percentage of patients aged 18 through 80 years with AJCC Stage III colon cancer who are referred for adjuvant chemotherapy, prescribed adjuvant chemotherapy, or have previously received adjuvant chemotherapy within the 12-month reporting period.	AMA–PCPI/ASCO/NCCN
0041/110	Preventive Care and Screening: Influenza Immunization: Percentage of patients aged 6 months and older seen for a visit between October 1 and March 31 who received an influenza immunization OR who reported previous receipt of an influenza immunization.	AMA–PCPI
0419/130	Documentation of Current Medications in the Medical Record: Percentage of visits for patients aged 18 years and older for which the eligible professional attests to documenting a list of current medications using all immediate resources available on the date of the encounter. This list must include ALL known prescriptions, over-the-counters, herbals, and vitamin/mineral/dietary (nutritional) supplements AND must contain the medications' name, dosage, frequency and route of administration.	CMS/QIP
0384/143	Oncology: Medical and Radiation—Pain Intensity Quantified: Percentage of patients, regardless of patient age, with a diagnosis of cancer currently receiving chemotherapy or radiation therapy in which pain intensity is quantified.	AMA–PCPI
0383/144	Oncology: Medical and Radiation—Plan of Care for Pain: Percentage of visits for patients, regardless of age, with a diagnosis of cancer currently receiving chemotherapy or radiation therapy who report having pain with a documented plan of care to address pain.	AMA–PCPI
0028/226	Preventive Care and Screening: Tobacco Use: Screening and Cessation Intervention: Percentage of patients 18 years and older who were screened for tobacco use one or more times within 24 months AND who received cessation counseling intervention if identified as a tobacco user.	AMA–PCPI

TABLE 41—PROPOSED OPTIMIZING PATIENT EXPOSURE TO IONIZING RADIATION MEASURES GROUP FOR 2015 AND BEYOND

NQF/ PQRS	Measure title and description	Measure developer
N/A/359	Optimizing Patient Exposure to Ionizing Radiation: Utilization of a Standardized Nomenclature for Computed Tomography (CT) Imaging Description: Percentage of computed tomography (CT) imaging reports for all patients, regardless of age, with the imaging study named according to a standardized nomenclature and the standardized nomenclature is used in institution's computer systems.	AMA–PCPI

TABLE 41—PROPOSED OPTIMIZING PATIENT EXPOSURE TO IONIZING RADIATION MEASURES GROUP FOR 2015 AND BEYOND—Continued

NQF/ PQRS	Measure title and description	Measure developer
N/A/360	Optimizing Patient Exposure to Ionizing Radiation: Count of Potential High Dose Radiation Imaging Studies: Computed Tomography (CT) and Cardiac Nuclear Medicine Studies: Percentage of computed tomography (CT) and cardiac nuclear medicine (myocardial perfusion studies) imaging reports for all patients, regardless of age, that document a count of known previous CT (any type of CT) and cardiac nuclear medicine (myocardial perfusion) studies that the patient has received in the 12-month period prior to the current study.	AMA–PCPI
N/A/361	Optimizing Patient Exposure to Ionizing Radiation: Reporting to a Radiation Dose Index Registry: Percentage of total computed tomography (CT) studies performed for all patients, regardless of age, that are reported to a radiation dose index registry AND that include at a minimum selected data elements.	AMA–PCPI
N/A/362	Optimizing Patient Exposure to Ionizing Radiation: Computed Tomography (CT) Images Available for Patient Follow-up and Comparison Purposes: Percentage of final reports for computed tomography (CT) studies performed for all patients, regardless of age, which document that Digital Imaging and Communications in Medicine (DICOM) format image data are available to non-affiliated external entities on a secure, media free, reciprocally searchable basis with patient authorization for at least a 12-month period after the study.	AMA–PCPI
N/A/363	Optimizing Patient Exposure to Ionizing Radiation: Search for Prior Computed Tomography (CT) Imaging Studies Through a Secure, Authorized, Media-Free, Shared Archive: Percentage of final reports of computed tomography (CT) studies performed for all patients, regardless of age, which document that a search for Digital Imaging and Communications in Medicine (DICOM) format images was conducted for prior patient CT imaging studies completed at non-affiliated external entities within the past 12 months and are available through a secure, authorized, media free, shared archive prior to an imaging study being performed.	AMA–PCPI
N/A/364	Optimizing Patient Exposure to Ionizing Radiation: Appropriateness: Follow-up CT Imaging for Incidentally Detected Pulmonary Nodules According to Recommended Guidelines: Percentage of final reports for CT imaging studies of the thorax for patients aged 18 years and older with documented follow-up recommendations for incidentally detected pulmonary nodules (eg, follow-up CT imaging studies needed or that no follow-up is needed) based at a minimum on nodule size AND patient risk factors.	AMA–PCPI

TABLE 42—PROPOSED PARKINSON'S DISEASE MEASURES GROUP FOR 2015 AND BEYOND

NQF/ PQRS	Measure title and description	Measure developer
0326/047	Care Plan: Percentage of patients aged 65 years and older who have an care plan or surrogate decision maker documented in the medical record or documentation in the medical record that an care plan was discussed but the patient did not wish or was not able to name a surrogate decision maker or provide an care plan.	AMA–PCPI/NCQA
N/A/289	Parkinson's Disease: Annual Parkinson's Disease Diagnosis Review: All patients with a diagnosis of Parkinson's disease who had an annual assessment including a review of current medications (e.g., medications that can produce Parkinson-like signs or symptoms) and a review for the presence of atypical features (e.g., falls at presentation and early in the disease course, poor response to levodopa, symmetry at onset, rapid progression [to Hoehn and Yahr stage 3 in 3 years], lack of tremor or dysautonomia) at least annually.	AAN
N/A/290	Parkinson's Disease: Psychiatric Disorders or Disturbances Assessment: All patients with a diagnosis of Parkinson's disease who were assessed for psychiatric disorders or disturbances (e.g., psychosis, depression, anxiety disorder, apathy, or impulse control disorder) at least annually.	AAN
N/A/291	Parkinson's Disease: Cognitive Impairment or Dysfunction Assessment: All patients with a diagnosis of Parkinson's disease who were assessed for cognitive impairment or dysfunction at least annually.	AAN
N/A/292	Parkinson's Disease: Querying about Sleep Disturbances: All patients with a diagnosis of Parkinson's disease (or caregivers, as appropriate) who were queried about sleep disturbances at least annually.	AAN
N/A/293	Parkinson's Disease: Rehabilitative Therapy Options: All patients with a diagnosis of Parkinson's disease (or caregiver(s), as appropriate) who had rehabilitative therapy options (e.g., physical, occupational, or speech therapy) discussed at least annually.	AAN
N/A/294	Parkinson's Disease: Parkinson's Disease Medical and Surgical Treatment Options Reviewed: All patients with a diagnosis of Parkinson's disease (or caregiver(s), as appropriate) who had the Parkinson's disease treatment options (e.g., non-pharmacological treatment, pharmacological treatment, or surgical treatment) reviewed at least once annually.	AAN

TABLE 43—PROPOSED PREVENTIVE CARE MEASURES GROUP FOR 2015 AND BEYOND

NQF/ PQRS	Measure title and description	Measure developer
0046/039	Screening or Therapy for Osteoporosis for Women Aged 65 Years and Older: Percentage of female patients aged 65 years and older who have a central dual-energy X-ray absorptiometry (DXA) measurement ordered or performed at least once since age 60 or pharmacologic therapy prescribed within 12 months.	AMA–PCPI/NCQA

TABLE 43—PROPOSED PREVENTIVE CARE MEASURES GROUP FOR 2015 AND BEYOND—Continued

NQF/ PQRS	Measure title and description	Measure developer
0098/48	Urinary Incontinence: Assessment of Presence or Absence of Urinary Incontinence in Women Aged 65 Years and Older: Percentage of female patients aged 65 years and older who were assessed for the presence or absence of urinary incontinence within 12 months.	AMA–PCPI/NCQA
0041/110	Preventive Care and Screening: Influenza Immunization: Percentage of patients aged 6 months and older seen for a visit between October 1 and March 31 who received an influenza immunization OR who reported previous receipt of an influenza immunization.	AMA–PCPI
0043/111	Pneumonia Vaccination Status for Older Adults: Percentage of patients 65 years of age and older who have ever received a pneumococcal vaccine.	NCQA
N/A/112	Breast Cancer Screening: Percentage of women 50 through 74 years of age who had a mammogram to screen for breast cancer within 27 months.	NCQA
0034/113	Colorectal Cancer Screening: Percentage of patients 50 through 75 years of age who had appropriate screening for colorectal cancer.	NCQA
0421/128	Preventive Care and Screening: Body Mass Index (BMI) Screening and Follow-Up: Percentage of patients aged 18 years and older with a documented BMI during the current encounter or during the previous 6 months AND when the BMI is outside of normal parameters, a follow-up plan is documented during the encounter or during the previous 6 months of the encounter. *Normal Parameters:* Age 65 years and older BMI ≥ 23 and < 30; Age 18–64 years BMI ≥ 18.5 and < 25	CMS/QIP
0418/134	Preventive Care and Screening: Screening for Clinical Depression and Follow-Up Plan: Percentage of patients aged 12 years and older screened for clinical depression on the date of the encounter using an age appropriate standardized depression screening tool AND if positive, a follow-up plan is documented on the date of the positive screen.	CMS/QIP
0028/226	Preventive Care and Screening: Tobacco Use: Screening and Cessation Intervention: Percentage of patients 18 years and older who were screened for tobacco use one or more times within 24 months AND who received cessation counseling intervention if identified as a tobacco user.	AMA–PCPI

TABLE 44—PROPOSED RHEUMATOID ARTHRITIS (RA) MEASURES GROUP FOR 2015 AND BEYOND

NQF/ PQRS	Measure title and description	Measure developer
0054/108	Rheumatoid Arthritis (RA): Disease Modifying Anti-Rheumatic Drug (DMARD) Therapy: Percentage of patients aged 18 years and older who were diagnosed with RA and were prescribed, dispensed, or administered at least one ambulatory prescription for a DMARD.	NCQA
0041/110	Preventive Care and Screening: Influenza Immunization: Percentage of patients aged 6 months and older seen for a visit between October 1 and March 31 who received an influenza immunization OR who reported previous receipt of an influenza immunization.	AMA–PCPI
N/A/176	Rheumatoid Arthritis (RA): Tuberculosis Screening: Percentage of patients aged 18 years and older with a diagnosis of rheumatoid arthritis (RA) who have documentation of a tuberculosis (TB) screening performed and results interpreted within 6 months prior to receiving a first course of therapy using a biologic disease-modifying anti-rheumatic drug (DMARD).	AMA–PCPI
N/A/177	Rheumatoid Arthritis (RA): Periodic Assessment of Disease Activity: Percentage of patients aged 18 years and older with a diagnosis of rheumatoid arthritis (RA) who have an assessment and classification of disease activity within 12 months.	AMA–PCPI
N/A/178	Rheumatoid Arthritis (RA): Functional Status Assessment: Percentage of patients aged 18 years and older with a diagnosis of rheumatoid arthritis (RA) for whom a functional status assessment was performed at least once within 12 months.	AMA–PCPI
N/A/179	Rheumatoid Arthritis (RA): Assessment and Classification of Disease Prognosis: Percentage of patients aged 18 years and older with a diagnosis of rheumatoid arthritis (RA) who have an assessment and classification of disease prognosis at least once within 12 months.	AMA–PCPI
N/A/180	Rheumatoid Arthritis (RA): Glucocorticoid Management: Percentage of patients aged 18 years and older with a diagnosis of rheumatoid arthritis (RA) who have been assessed for glucocorticoid use and, for those on prolonged doses of prednisone ≥10 mg daily (or equivalent) with improvement or no change in disease activity, documentation of glucocorticoid management plan within 12 months.	AMA–PCPI
0028/226	Preventive Care and Screening: Tobacco Use: Screening and Cessation Intervention: Percentage of patients 18 years and older who were screened for tobacco use one or more times within 24 months AND who received cessation counseling intervention if identified as a tobacco user.	AMA–PCPI

TABLE 45—PROPOSED SINUSITIS MEASURES GROUP FOR 2015 AND BEYOND

NQF/PQRS	Measure title and description	Measure developer
0419/130	Documentation of Current Medications in the Medical Record: Percentage of visits for patients aged 18 years and older for which the eligible professional attests to documenting a list of current medications using all immediate resources available on the date of the encounter. This list must include ALL known prescriptions, over-the-counters, herbals, and vitamin/mineral/dietary (nutritional) supplements AND must contain the medications' name, dosage, frequency and route of administration..	CMS/QIP
0420/131	Pain Assessment and Follow-Up: Percentage of visits for patients aged 18 years and older with documentation of a pain assessment using a standardized tool(s) on each visit AND documentation of a follow-up plan when pain is present.	CMS/QIP

TABLE 45—PROPOSED SINUSITIS MEASURES GROUP FOR 2015 AND BEYOND—Continued

NQF/PQRS	Measure title and description	Measure developer
0028/226	Preventive Care and Screening: Tobacco Use: Screening and Cessation Intervention: Percentage of patients 18 years and older who were screened for tobacco use one or more times within 24 months AND who received cessation counseling intervention if identified as a tobacco user.	AMA–PCPI
N/A/331	Adult Sinusitis: Antibiotic Prescribed for Acute Sinusitis (Appropriate Use): Percentage of patients, aged 18 years and older, with a diagnosis of acute sinusitis who were prescribed an antibiotic within 7 days of diagnosis or within 10 days after onset of symptoms.	AMA–PCPI
N/A/332	Adult Sinusitis: Appropriate Choice of Antibiotic: Amoxicillin Prescribed for Patients with Acute Bacterial Sinusitis: Percentage of patients aged 18 years and older with a diagnosis of acute bacterial sinusitis that were prescribed amoxicillin, without clavulante, as a first line antibiotic at the time of diagnosis.	AMA–PCPI
N/A/333	Adult Sinusitis: Computerized Tomography for Acute Sinusitis (Overuse): Percentage of patients aged 18 years and older with a diagnosis of acute sinusitis who had a computerized tomography (CT) scan of the paranasal sinuses ordered at the time of diagnosis or received within 28 days after date of diagnosis.	AMA–PCPI

TABLE 46—PROPOSED SLEEP APNEA MEASURES GROUP FOR 2015 AND BEYOND

[Please note that we are proposing to remove this measure group contingent on the measure steward not being able to maintain certain measures contained in these measures group. If a measure steward is able to maintain ownership of these measures, we plan to keep this measures group in the PQRS measure set. This Table Q26 indicates the measures that we propose will be available in this measures group should we keep this measures group in the PQRS measure set]

NQF/PQRS	Measure title and description	Measure developer
0421/128	Preventive Care and Screening: Body Mass Index (BMI) Screening and Follow-Up: Percentage of patients aged 18 years and older with a documented BMI during the current encounter or during the previous 6 months AND when the BMI is outside of normal parameters, a follow-up plan is documented during the encounter or during the previous 6 months of the encounter. *Normal Parameters:* Age 65 years and older BMI ≥ 23 and < 30; Age 18–64 years BMI ≥ 18.5 and < 25	CMS/QIP
0419/130	Documentation of Current Medications in the Medical Record: Percentage of visits for patients aged 18 years and older for which the eligible professional attests to documenting a list of current medications using all immediate resources available on the date of the encounter. This list must include ALL known prescriptions, over-the-counters, herbals, and vitamin/mineral/dietary (nutritional) supplements AND must contain the medications' name, dosage, frequency and route of administration.	CMS/QIP
0028/226	Preventive Care and Screening: Tobacco Use: Screening and Cessation Intervention: Percentage of patients 18 years and older who were screened for tobacco use one or more times within 24 months AND who received cessation counseling intervention if identified as a tobacco user.	AMA–PCPI
N/A/276	Sleep Apnea: Assessment of Sleep Symptoms: Percentage of visits for patients aged 18 years and older with a diagnosis of obstructive sleep apnea that includes documentation of an assessment of sleep symptoms, including presence or absence of snoring and daytime sleepiness.	AMA–PCPI/NCQA
N/A/277	Sleep Apnea: Severity Assessment at Initial Diagnosis: Percentage of patients aged 18 years and older with a diagnosis of obstructive sleep apnea who had an apnea hypopnea index (AHI) or a respiratory disturbance index (RDI) measured at the time of initial diagnosis.	AMA–PCPI/NCQA
N/A/278	Sleep Apnea: Positive Airway Pressure Therapy Prescribed: Percentage of patients aged 18 years and older with a diagnosis of moderate or severe obstructive sleep apnea who were prescribed positive airway pressure therapy.	AMA–PCPI/NCQA
N/A/279	Sleep Apnea: Assessment of Adherence to Positive Airway Pressure Therapy: Percentage of visits for patients aged 18 years and older with a diagnosis of obstructive sleep apnea who were prescribed positive airway pressure therapy who had documentation that adherence to positive airway pressure therapy was objectively measured.	AMA–PCPI/NCQA

TABLE 47—PROPOSED TOTAL KNEE REPLACEMENT (TKR) MEASURES GROUP FOR 2015 AND BEYOND

NQF/PQRS	Measure title and description	Measure developer
0419/130	Documentation of Current Medications in the Medical Record: Percentage of visits for patients aged 18 years and older for which the eligible professional attests to documenting a list of current medications using all immediate resources available on the date of the encounter. This list must include ALL known prescriptions, over-the-counters, herbals, and vitamin/mineral/dietary (nutritional) supplements AND must contain the medications' name, dosage, frequency and route of administration.	CMS/QIP
0028/226	Preventive Care and Screening: Tobacco Use: Screening and Cessation Intervention: Percentage of patients 18 years and older who were screened for tobacco use one or more times within 24 months AND who received cessation counseling intervention if identified as a tobacco user.	AMA–PCPI
N/A/350	Total Knee Replacement: Shared Decision-Making: Trial of Conservative (Non-surgical) Therapy: Percentage of patients regardless of age or gender undergoing a total knee replacement with documented shared decision-making with discussion of conservative (non-surgical) therapy prior to the procedure.	AAHKS
N/A/351	Total Knee Replacement: Venous Thromboembolic and Cardiovascular Risk Evaluation: Percentage of patients regardless of age or gender undergoing a total knee replacement who are evaluated for the presence or absence of venous thromboembolic and cardiovascular risk factors within 30 days prior to the procedure including history of Deep Vein Thrombosis, Pulmonary Embolism, Myocardial Infarction, Arrhythmia and Stroke.	AAHKS

TABLE 47—PROPOSED TOTAL KNEE REPLACEMENT (TKR) MEASURES GROUP FOR 2015 AND BEYOND—Continued

NQF/PQRS	Measure title and description	Measure developer
N/A/352	Total Knee Replacement: Preoperative Antibiotic Infusion with Proximal Tourniquet: Percentage of patients regardless of age undergoing a total knee replacement who had the prophylactic antibiotic completely infused prior to the inflation of the proximal tourniquet.	AAHKS
N/A/353	Total Knee Replacement: Identification of Implanted Prosthesis in Operative Report: Percentage of patients regardless of age or gender undergoing total knee replacement whose operative report identifies the prosthetic implant specifications including the prosthetic implant manufacturer, the brand name of the prosthetic implant and the size of prosthetic implant.	AAHKS

e. Proposals for Measures Available for Reporting in the GPRO Web Interface

We finalized the measures that are available for reporting in the GPRO Web interface for 2014 and beyond in the CY 2013 PFS final rule (77 FR 69269). However, we are proposing to remove and add measures in the GPRO Web interface measure set as reflected in Tables 47 and 48 for 2015 and beyond. Specifically, Table 47 specifies the measures we are proposing to remove for reporting from the GPRO Web interface, and Table 48 specifies the measures we are proposing to add for reporting in the GPRO Web interface. CMS is proposing to adopt Depression Remission at Twelve Months (NQF #0710) in the 2015 GPRO Web Interface reporting option for ACOs and group practices. This measure is currently reportable in the PQRS program through the EHR reporting option only and has not been tested using claims level data or sampling methodology. Depression Remission at Twelve Months (NQF #0710) requires a look-back period and a look-forward period possibly spanning multiple calendar years. Additionally, this measure requires utilization of a PHQ–9 depression screening tool with a score greater than 9 and a diagnosis of depression/dysthymia to identify the beginning of the episode (initial patient population). Successful completion of the quality action for this measure looks for a PHQ–9 score of less than 5 at the twelve month mark (plus or minus 30 days) from the initial onset of the episode. CMS is soliciting comments regarding this proposal, including operational concerns and the technical feasibility for implementation in the 2015 GPRO Web Interface. We note that, in addition to addressing changes in evidence-based practices, we are modifying the GPRO Web interface in an effort to align with the proposed measure changes in the Medicare Shared Savings Program specified in section III.M.

BILLING CODE 4120–01–P

TABLE 48: Proposed Measures for Removal from the Group Practice Reporting Option Web Interface Beginning in 2015 and Beyond

NQF/ PQRS	GPRO Module	NQS Domain	Measure and Title Description[¥]	Measure Steward	Other Quality Reporting Programs
0097/ 46	Care Coordination/ Patient Safety	Patient Safety	**Medication Reconciliation:** Percentage of patients aged 65 years and older **discharged from any inpatient facility** (e.g., hospital, skilled nursing facility, or rehabilitation facility) and **seen within 30 days following discharge** in the office by the physician, prescribing practitioner, registered nurse, or clinical pharmacist providing on-going care who had a reconciliation of the discharge medications with the current medication list in the outpatient medical record documented **Rationale:** This measure is designed to determine that medication reconciliation was done immediately following a hospital discharge whereas the medical community has indicated to us that it is better clinical practice to perform medication reconciliation at every office visit. Therefore, we propose replacing this measure with NQF #0419 Documentation of Medications in the Medical Record is designed to measure. In addition, this new replacement measure aligns with the measure used in other PQRS reporting options and MU. It is also proposed for the Medicare Shared Savings Program and proposed for a domain change to communication and care coordination to be consistent with the domain used by NQF for this measure.	NCQA	
0074/ 197	Coronary Artery Disease	Effective Clinical Care	**Coronary Artery Disease (CAD): Lipid Control:** Percentage of patients aged 18 years and older with a diagnosis of coronary artery disease seen within a 12 month period who have a LDL-C result < 100 mg/dL OR patients who have a LDL-C result ≥ 100 mg/dL and have a documented plan of care to achieve LDL-C < 100 mg/dL, including at a minimum the prescription of a statin **Rationale:** We propose to retire this and the two other lipid control measures listed as a result of new clinical guidelines released in 2013 by the American College of Cardiology and American Heart Association (**https://circ.ahajournals.org/content/early/2013/11/11/01.cir.0000437738.63853.7a.full.pdf ***). The new guidelines recommend treating individuals with moderate to high dose statin therapy based on cardiac risk rather than only treating high cholesterol to specific targets.	AMA-PCPI/ ACCF/ AHA	

NQF/ PQRS	GPRO Module	NQS Domain	Measure and Title Description[¥]	Measure Steward	Other Quality Reporting Programs
0729/ 319	Diabetes Mellitus	Effective Clinical Care	**Diabetes Composite: Optimal Diabetes Care:** Patients ages 18 through 75 with a diagnosis of diabetes, who meet all the numerator targets of this composite measure: ● Diabetes Mellitus: High Blood Pressure Control. ● Diabetes Mellitus: Low Density Lipoprotein (LDL-C) Control. ● Diabetes Mellitus: Hemoglobin A1c Control (< 8%). ● Diabetes Mellitus: Tobacco Non-Use **Rationale:** We propose retiring 4 components of the 5 part diabetes composite measure as noted above. Specifically, we believe: ● The blood pressure component is somewhat duplicative of the measure Controlling High Blood Pressure (NQF #0018) and that the diabetes measure may capture a subpopulation of the broader Controlling High Blood Pressure measure. ● We propose to retire the LDL component as a result of new clinical guidelines released in 2013 by the American College of Cardiology and American Heart Association (**https://circ.ahajournals.org/content/early/2013/11/11/01.cir.0000437738.63853.7a.full.pdf***). The new guidelines recommend treating individuals with moderate to high dose statin therapy based on cardiac risk rather than only treating high cholesterol to specific targets ● The Tobacco Non-Use component of the Diabetes Mellitus composite is being proposed for removal from the 2015 GPRO Web Interface as this component is somewhat duplicative of the Tobacco Screening and Cessation Counseling measure (NQF 0028) and NQF 0028 is more broadly applicable. ● The Hemoglobin A1c Control (<8%) component is being proposed for removal as there are concerns that the A1c level monitored in this measure is considered too low to comprehensively evaluate the A1c is in control for the elder, frail population.	MNCM	
0075/ 241	Ischemic Vascular Disease	Effective Clinical Care	**Ischemic Vascular Disease (IVD): Complete Lipid Profile and LDL-C Control (< 100 mg/dL):** Percentage of patients 18 years of age and older who were discharged alive for acute myocardial infarction (AMI), coronary artery bypass graft (CABG) or percutaneous coronary interventions (PCI) in the 12 months prior to the measurement period, or who had an active diagnosis of ischemic vascular disease (IVD) during the measurement period, and who had each of the following during the measurement period: a complete lipid profile and LDL-C was adequately controlled (< 100 mg/dL) **Rationale:** We propose to retire this lipid control related measure because of the new clinical guidelines for statin treatment, as discussed for other LDL measures in this table.	NCQA	MU2 Million Hearts
0068/ 204	Ischemic Vascular Disease	Effective Clinical Care	**Ischemic Vascular Disease (IVD): Use of Aspirin or Another Antithrombotic:** Percentage of patients 18 years of age and older who were discharged alive for acute myocardial infarction (AMI), coronary artery bypass graft (CABG) or percutaneous coronary interventions (PCI) in the 12 months prior to the measurement period, or who had an active diagnosis of ischemic vascular disease (IVD) during the measurement period and who had documentation of use of aspirin or another antithrombotic during the measurement period **Rationale:** CMS proposes removing this measure and replacing it with Coronary Artery Disease (CAD): Antiplatelet Therapy (NQF #0067), added to the existing CAD composite measure in GPRO Web Interface.	NCQA	MU2 Million Hearts

TABLE 49: Proposed New Measures That Will Be Available for Reporting by the Group Practice Reporting Option Web Interface Beginning in 2015 and Beyond

NQF/ PQRS	GPRO Module	NQS Domain	Measure and Title Description[¥]	Measure Steward	Other Quality Reporting Programs
0059/ 1	Diabetes Mellitus	Effective Clinical Care	**Diabetes: Hemoglobin A1c Poor Control:** Percentage of patients 18-75 years of age with diabetes who had hemoglobin A1c > 9.0% during the measurement period. **Rationale:** This is an existing measure that is being proposed as part of the new Diabetes Management composite as a more appropriate A1c component.	NCQA	MU2
0067/ 6	Coronary Artery Disease	Effective Clinical Care	**Coronary Artery Disease (CAD): Antiplatelet Therapy:** Percentage of patients aged 18 years and older with a diagnosis of coronary artery disease seen within a 12 month period who were prescribed aspirin or clopidogrel. **Rationale**: This is a new measure that is proposed as part of a new Coronary Artery Disease (CAD) composite due to updated clinical guidelines that affected CAD-2 (NQF 0074) Coronary Artery Disease (CAD): Lipid Control.	AMA-PCPI/ ACCF/ AHA	MU2
0070/ 7	Coronary Artery Disease	Effective Clinical Care	**Coronary Artery Disease (CAD): Beta-Blocker Therapy – Prior Myocardial Infarction (MI) or Left Ventricular Systolic Dysfunction (LVEF < 40%):** Percentage of patients aged 18 years and older with a diagnosis of coronary artery disease seen within a 12 month period who also have prior MI OR a current or LVEF < 40% who were prescribed beta-blocker therapy **Rationale:** This is a new measure that is being proposed to create a new Coronary Artery Disease (CAD) composite due to updated clinical guidelines that affected CAD-2 (NQF 0074) Coronary Artery Disease (CAD): Lipid Control.	AMA-PCPI/ ACCF/ AHA	MU2
0055/ 117	Diabetes Mellitus	Effective Clinical Care	**Diabetes: Eye Exam:** Percentage of patients 18 through 75 years of age with a diagnosis of diabetes (type 1 and type 2) who had a retinal or dilated eye exam in the measurement period or a negative retinal or dilated eye exam (negative for retinopathy) in the year prior to the measurement period **Rationale:** This is a new measure that is being proposed to create a new Diabetes Management composite due to some components of the current MNCM composite being impacted by the updated ATP4 and JNC8 clinical guidelines. We believe eye exams are an important part of quality care for diabetic patients.	NCQA	MU2
0419/ 130	Care Coordinatio n/ Patient Safety	Patient Safety	**Documentation of Current Medications in the Medical Record:** Percentage of visits for patients aged 18 years and older for which the eligible professional attests to documenting a list of current medications using all immediate resources available on the date of the encounter. This list ***must*** include ALL known prescriptions, over-the-counters, herbals, and vitamin/mineral/dietary (nutritional) supplements AND ***must*** contain the medications' name, dosage, frequency and route of administration **Rationale:** This is a new measure being proposed to replace CARE-1 (PQRS #46) Medication Reconciliation: Reconciliation After Discharge from an Inpatient Facility as this measure was not appropriate for the GPRO Web Interface per feedback from the measure steward (NCQA). Also, we received feedback from the measures community that Medication Reconciliation should be performed at all office visits and not just those visits occurring after an inpatient discharge.	CMS/QIP	MU2

NQF/ PQRS	GPRO Module	NQS Domain	Measure and Title Description[¥]	Measure Steward	Other Quality Reporting Programs
0056/ 163	Diabetes Mellitus	Effective Clinical Care	**Diabetes: Foot Exam:** Percentage of patients aged 18-75 years of age with diabetes who had a foot exam during the measurement period **Rationale**: This is a new measure being proposed as part of the Diabetes Management composite due to some components of the current MNCM composite being affected by the updated ATP4 and JNC8 clinical guidelines. We believe foot exams are an important part of quality care for diabetic patients.	NCQA	MU2
N/A/2 42	Coronary Artery Disease	Effective Clinical Care	**Coronary Artery Disease (CAD): Symptom Management:** Percentage of patients aged 18 years and older with a diagnosis of coronary artery disease seen within a 12 month period with results of an evaluation of level of activity and an assessment of whether anginal symptoms are present or absent with appropriate management of anginal symptoms within a 12 month period **Rationale:** This is a new measure that is being proposed to create a new Coronary Artery Disease (CAD) composite due to updated clinical guidelines that affected CAD-2 (NQF 0074) Coronary Artery Disease (CAD): Lipid Control.	AMA-PCPI/ ACCF/ AHA	
0729/ 319	Diabetes Mellitus	Effective Clinical Care	**Diabetes Composite: Optimal Diabetes Care:** Patients ages 18 through 75 with a diagnosis of diabetes, who meet all the numerator targets of this composite measure: ● For patients with a diagnosis of ischemic vascular disease, daily aspirin use unless contraindicated **Rationale:** CMS proposes to maintain this component of the Optimal Diabetes Care composite and adding it to the new CMS Diabetes Management composite, as it represents an important quality measure for patients with multiple chronic conditions, such as diabetes and IVD.	MNCM	
0710/ 370		Effective Clinical Care	**Depression Remission at Twelve Months:** Adult patients age 18 and older with major depression or dysthymia and an initial PHQ-9 score > 9 who demonstrate remission at twelve months defined as PHQ-9 score less than 5. This measure applies to both patients with newly diagnosed and existing depression whose current PHQ-9 score indicates a need for treatment. **Rationale:** This is a new measure being proposed as it reflects a clinical concept not currently addressed. While we currently have a depression screening and follow-up measure in the GPRO WI, the Depression Remission measure represents an important outcome. Depression management is particularly important due the effects on patient adherence with treatment for other chronic conditions.	MNCM	MU2

BILLING CODE 4120–01–C

Please note that, if these proposals are finalized, the GPRO measure set will contain 21 measures available for reporting.

f. The Clinician Group (CG) Consumer Assessment of Healthcare Providers and Systems (CAHPS) Survey

In the CY 2014 PFS final rule with comment period, we finalized the CG–CAHPS survey available for reporting under the PQRS for 2014 and beyond (78 FR 74750 through 74751), to which we are now referring as the CAHPS for PQRS. Please note that, in the CY 2014 PFS final rule with comment period, we classified the CAHPS for PQRS survey under the care coordination and communication NQS domain. We note that this was an error on our part, as the CAHPS for PQRS survey has typically been classified under the Person and Caregiver-Centered Experience and Outcomes domain as the CAHPS for PQRS survey assesses beneficiary experience of care and outcomes. Therefore, as we indicate in Table 21, we are proposing to reclassify the CAHPS for PQRS survey under the Person and Caregiver-Centered Experience and Outcomes domain. We invite public comment on this proposal.

6. Statutory Requirements and Other Considerations for the Selection of PQRS Quality Measures for Meeting the Criteria for Satisfactory Participation in a QCDR for 2014 and Beyond for Individual Eligible Professionals

For the measures which eligible professionals participating in a QCDR must report, section 1848(m)(3)(D) of the Act, as amended and added by section 601(b) of the ATRA, provides that the Secretary shall treat eligible professionals as satisfactorily submitting data on quality measures if they satisfactorily participate in a QCDR. Section 1848(m)(3)(E) of the Act, as added by section 601(b) of the ATRA, provides some flexibility with regard to the types of measures applicable to satisfactory participation in a QCDR, by specifying that for measures used by a QCDR, sections 1890(b)(7) and 1890A(a) of the Act shall not apply, and measures endorsed by the entity with a contract with the Secretary under section 1890(a) of the Act may be used.

In the CY 2014 PFS final rule with comment period, we finalized requirements related to the parameters for the measures that would have to be reported to CMS by a QCDR for the purpose of its individual eligible

professionals meeting the criteria for satisfactory participation under the PQRS (78 FR 74751 through 74753). Although we are not proposing to remove any of the requirements we finalized related to these parameters, we are proposing to modify the following parameters we finalized in the CY 2014 PFS final rule with comment period related to measures that may be reported by a QCDR:

• The QCDR must have at least 1 outcome measure available for reporting, which is a measure that assesses the results of health care that are experienced by patients (that is, patients' clinical events; patients' recovery and health status; patients' experiences in the health system; and efficiency/cost).

As we are proposing that for an eligible professional to meet the criterion for satisfactory participation in a QCDR for the 2017 PQRS payment adjustment, the eligible professional must report on at least 3 outcome measures or, in lieu of 3 outcome measures, at least 2 outcome measures and 1 resource use, patient experience of care, or efficiency/appropriate use measure, we are modifying this requirement to conform to this proposed satisfactory participation criterion. Therefore, we are proposing that a QCDR must have at least 3 outcome measures available for reporting, which is a measure that assesses the results of health care that are experienced by patients (that is, patients' clinical events; patients' recovery and health status; patients' experiences in the health system; and efficiency/cost). In lieu of having 3 outcome measures available for reporting, the QCDR must have at least 2 outcome measures available for reporting and at least 1 resource use, patient experience of care, or efficiency/appropriate use measure.

We are proposing to define resource use, patient experience of care, or efficiency/appropriate use measures in the following manner:

• A resource use measure is a measure that is a comparable measure of actual dollars or standardized units of resources applied to the care given to a specific population or event, such as a specific diagnosis, procedure, or type of medical encounter.

• A patient experience of care measure is a measure of person- or family-reported experiences (outcomes) of being engaged as active members of the health care team and in collaborative partnerships with providers and provider organizations.

• An efficiency/appropriate use measure is a measure of the appropriate use of health care services (such as diagnostics or therapeutics) based upon evidence-based guidelines of care, or for which the potential for harm exceeds the possible benefits of care.

Please note that, for purposes of meeting the criteria for satisfactory participation in a QCDR, we allow QCDRs to report on any measure provided that it meets the measure parameters we finalize. We note that we would allow and encourage the reporting of the Consumer Assessment of Healthcare Providers Surgical Care Survey (S–CAHPS) through a QCDR.

Finally, in the CY 2014 PFS final rule with comment period, we stated that a QCDR must provide to CMS descriptions and narrative specifications for the measures for which it will report to CMS by no later than March 31, 2014. In keeping with this timeframe, we propose that a QCDR must provide to CMS descriptions for the measures for which it will report to CMS for a particular year by no later than March 31 of the applicable reporting period for which the QCDR wishes to submit quality measures data. For example, if a QCDR wishes to submit quality measures data for the 2017 PQRS payment adjustment (the 12-month reporting period of which occurs in 2015), the QCDR must provide to CMS descriptions for the measures for which it will report to CMS by no later than March 31, 2015. The descriptions must include: name/title of measures, NQF # (if NQF endorsed), descriptions of the denominator, numerator, and when applicable, denominator exceptions and denominator exclusions of the measure. The narrative specifications provided must be similar to the narrative specifications we provide in our measures list, available at *http://www.cms.gov/apps/ama/license.asp?file=/PQRS/downloads/2014_PQRS_IndClaimsRegistry_MeasureSpecs_SupportingDocs_12132013.zip.*

Related to this proposal, we propose that, 15 days following CMS approval of these measure specifications, the QCDR must publicly post the measures specifications for the measures it intends to report for the PQRS using any public format it prefers. Immediately following posting of the measures specification information, the QCDR must provide CMS with the link to where this information is posted. CMS will then post this information when it provides its list of QCDRs for the year. We believe providing this information will further aide in creating transparency of reporting.

We invite public comment on these proposals.

7. Informal Review

In the CY 2013 PFS final rule with comment period (77 FR 69289), we established that ''an eligible professional electing to utilize the informal review process must request an informal review by February 28 of the year in which the payment adjustment is being applied. For example, if an eligible professional requests an informal review related to the 2015 payment adjustment, the eligible professional would be required to submit his/her request for an informal review by February 28, 2015.'' As stated in the CY 2013 PFS final rule with comment period, we believed this deadline provided ample time for eligible professionals and group practices after their respective claims begin to be adjusted due to the payment adjustment. However, because PQRS data is used to establish the quality composite of the VM, we believe it is necessary to expand the informal review process to allow for some limited corrections of the PQRS data to be made. Therefore, we propose to modify the payment adjustment informal review deadline to within 30 days of the release of the feedback reports. For example, if the feedback reports for the 2016 payment adjustment (based on data collected for 2014 reporting periods) are released on August 31, 2015, an eligible professional or group practice would be required to submit a request for an informal review by September 30, 2015. We believe that by being able to notify eligible professionals and group practices of CMS' decision on the informal review request much earlier than we would have been able to do with the previous informal review request deadline we can provide a brief period for an eligible or group practice to make some limited corrections to its PQRS data. This resubmitted data could then be used to make corrections to the VM calculations, when appropriate.

The PQRS regulations at § 414.90(m)(1) currently require an eligible professional or group practice to submit an informal review request to CMS within 90 days of the release of the feedback reports. Therefore, we propose to revise § 414.90(m)(1).

Regarding the eligible professional's or group practice's ability to provide additional information to assist in the informal review process, we propose to provide the following limitations as to what information may be taken into consideration:

• CMS would only allow resubmission of data that was submitted using a third-party vendor using either

the qualified registry, EHR data submission vendor, or QCDR reporting mechanisms. Therefore, CMS would not allow resubmission of data submitted via claims, direct EHR, or the GPRO web interface reporting mechanisms. We are limiting resubmission to third-party vendors, because we believe that third-party vendors are more easily able to detect errors than direct users.

CMS would only allow resubmission of data that was already previously submitted to CMS. Submission of new data—such as new measures data not previously submitted or new data for eligible professionals for which data was not submitted during the original submission period—would not be accepted.

• For any given resubmission period, CMS would only accept data that was previously submitted for the reporting periods for which the corresponding informal review period applies. For example, the resubmission period immediately following the informal review period for the 2017 PQRS payment adjustment would only allow resubmission for data previously submitted for the 2017 PQRS payment adjustment reporting periods occurring in 2015.

As such, we are proposing to add § 414.90(m)(3) to reflect this proposal as follows: (3) If, during the informal review process, CMS finds errors in data that was submitted using a third-party vendor using either the qualified registry, EHR data submission vendor, or QCDR reporting mechanisms, CMS may allow for the resubmission of data to correct these errors. (i) CMS will not allow resubmission of data submitted via claims, direct EHR, and the GPRO web interface reporting mechanisms. (ii) CMS will only allow resubmission of data that was already previously submitted to CMS. (iii) CMS will only accept data that was previously submitted for the reporting periods for which the corresponding informal review period applies.

We invite public comment on these proposals.

L. Electronic Health Record (EHR) Incentive Program

The HITECH Act (Title IV of Division B of the ARRA, together with Title XIII of Division A of the ARRA) authorizes incentive payments under Medicare and Medicaid for the adoption and meaningful use of certified EHR technology (CEHRT). Section 1848(o)(2)(B)(iii) of the Act requires that in selecting CQMs for eligible professionals (EPs) to report under the EHR Incentive Program, and in establishing the form and manner of reporting, the Secretary shall seek to avoid redundant or duplicative reporting otherwise required. As such, we have taken steps to establish alignments among various quality reporting and payment programs that include the submission of CQMs.

For CY 2012 and subsequent years, § 495.8(a)(2)(ii) requires an EP to successfully report the clinical quality measures selected by CMS to CMS or the states, as applicable, in the form and manner specified by CMS or the states, as applicable.

In the CY 2014 PFS final rule with comment period (78 FR 74756), we finalized our proposal to require EPs who seek to report CQMs electronically under the Medicare EHR Incentive Program to use the most recent version of the electronic specifications for the CQMs and have CEHRT that is tested and certified to the most recent version of the electronic specifications for the CQMs. We noted it is important for EPs to electronically report the most recent versions of the electronic specifications for the CQMs as updated measure versions correct minor inaccuracies found in prior measure versions. We stated that to ensure that CEHRT products can successfully transmit CQM data using the most recent version of the electronic specifications for the CQMs, it is important that the product be tested and certified to the most recent version of the electronic specifications for the CQMs.

Since finalizing this proposal, we have received feedback from stakeholders regarding the difficulty and expense of having to test and recertify CEHRT products to the most recent version of the electronic specifications for the CQMs. While we still believe EPs should test and certify their products to the most recent version of the electronic specifications for the CQMs when feasible, we understand the burdens associated with this requirement. Therefore, to eliminate this added burden, we are proposing that, beginning in CY 2015, EPs would not be required to ensure that their CEHRT products are recertified to the most recent version of the electronic specifications for the CQMs. Please note that, although we are not requiring recertification, EPs must still report the most recent version of the electronic specifications for the CQMs.

In the CY 2014 PFS final rule with comment period, we established the requirement that EPs who seek to report CQMs electronically under the Medicare EHR Incentive Program must use the most recent version of the electronic specifications for the CQMs (78 FR 74756). When establishing this requirement, we did not account for instances where errors are discovered in the updated electronic measure specifications. To account for these instances and consistent with the proposal set forth in the PQRS in section III.K, we propose that, beginning in CY 2015, if we discover errors in the most recently updated electronic measure specifications for a certain measure, we would use the version of electronic measure specifications that immediately precedes the most recently updated electronic measure specifications.

Additionally, we noted that, with respect to the following measure CMS140v2, Breast Cancer Hormonal Therapy for Stage IC–IIIC Estrogen Receptor/Progesterone Receptor (ER/PR) Positive Breast Cancer (NQF 0387), a substantive error was discovered in the June 2013 version of this electronically specified clinical quality measure (78 FR 74757). If an EP chooses to report this measure electronically under the EHR Incentive Program in CY 2014, the prior, December 2012 version of the measure, which is CMS140v1, must be used (78 FR 74757). Since a more recent and corrected version of this measure has been developed, we will require the reporting of the most recent, updated version of the measure Breast Cancer Hormonal Therapy for Stage IC–IIIC Estrogen Receptor/Progesterone Receptor (ER/PR) Positive Breast Cancer (NQF 0387), if an EP chooses to report the measure electronically in CY 2015.

In the EHR Incentive Program Stage 2 final rule, we established CQM reporting options for the Medicare EHR Incentive Program for CY 2014 and subsequent years that include one individual reporting option that aligns with the PQRS's EHR reporting option (77 FR 54058) and two group reporting options that align with the PQRS GPRO and Medicare Shared Savings Program (MSSP) and Pioneer ACOs (77 FR 54076 to 54078). In the CY 2014 PFS final rule with comment period, we finalized two additional aligned options for EPs to report CQMs for the Medicare EHR Incentive Program for CY 2014 and subsequent years with the intention of minimizing the reporting burden on EPs (78 FR 74753 through 74757). One of the aligned options finalized in the CY 2014 PFS final rule with comment period (78 FR 74754 through 74755) is a reporting option for CQMs for the Medicare EHR Incentive Program under which EPs can submit CQM information using qualified clinical data registries, according the definition and requirements for qualified clinical data registries established under the PQRS.

The second aligned option finalized in the CY 2014 PFS final rule with comment period (78 FR 74755 through 74756) is a group reporting option for CQMs for the Medicare EHR Incentive Program beginning in CY 2014 under which EPs who are part of a Comprehensive Primary Care (CPC) initiative practice site that successfully reports at least nine electronically specified CQMs across three domains for the relevant reporting period in accordance with the requirements established for the CPC initiative and using CEHRT would satisfy the CQM reporting component of meaningful use for the Medicare EHR Incentive Program. If a CPC practice site is not successful in reporting, EPs who are part of the site would still have the opportunity to report CQMs in accordance with the requirements established for the Medicare EHR Incentive Program in the Stage 2 final rule. Additionally, only those EPs who are beyond their first year of demonstrating meaningful use may use this CPC group reporting option. The CPC practice sites must submit the CQM data in the form and manner required by the CPC initiative. Therefore, whether CPC required electronic submission or attestation of CQMs, the CPC practice site must submit the CQM data in the form and manner required by the CPC initiative.

The CPC initiative, under the authority of section 3021 of the Affordable Care Act, is a multi-payer initiative fostering collaboration between public and private health care payers to strengthen primary care. Under this initiative, we will pay participating primary care practices a care management fee to support enhanced, coordinated services. Simultaneously, participating commercial, state, and other federal insurance plans are also offering enhanced support to primary care practices that provide high-quality primary care. There are approximately 483 CPC practice sites across 7 health care markets in the U.S. More details on the CPC initiative can be found at *http://innovation.cms.gov/initiatives/Comprehensive-Primary-Care-Initiative/index.html.*

Under the CPC initiative, CPC practice sites are required to report to CMS a subset of the CQMs that were selected in the EHR Incentive Program Stage 2 final rule for EPs to report under the EHR Incentive Program beginning in CY 2014 (for a list of CQMs that were selected in the EHR Incentive Program Stage 2 final rule for EPs to report under the EHR Incentive Program beginning in CY 2014, see 77 FR 54069 through 54075). We propose to retain the group reporting option for CPC practice sites as finalized in the CY 2014 PFS final rule, but to relax the requirement for the CQMs to cover three domains. Instead, we propose that, for CY 2015 only, under this group reporting option, the CPC practice site must report a minimum of nine CQMs from the CPC subset, and the nine CQMs reported must cover at least 2 domains, although we strongly encourage practice sites to report across more domains if feasible. Although the requirement to report across three domains is important because the domains are linked to the National Quality Strategy and used throughout CMS quality programs, the CPC practice sites are required to report from a limited number of CQMs that were selected for the EHR Incentive Program and are focused on a primary care population. Therefore, these CPC practice sites may not have measures to select from that cover three domains. Additionally, CPC practice sites are assessed for quality performance on measures other than electronically specified CQMs which do cover other National Quality Strategy domains. We invite public comment on this proposal.

M. Medicare Shared Savings Program

Under section 1899 of the Act, CMS has established the Medicare Shared Savings program (Shared Savings Program) to facilitate coordination and cooperation among providers to improve the quality of care for Medicare Fee-For-Service (FFS) beneficiaries and reduce the rate of growth in health care costs. Eligible groups of providers and suppliers, including physicians, hospitals, and other health care providers, may participate in the Shared Savings Program by forming or participating in an Accountable Care Organization (ACO). The final rule implementing the Shared Savings Program appeared in the November 2, 2011 **Federal Register** (Medicare Shared Savings Program: Accountable Care Organizations Final Rule (76 FR 67802)).

Section 1899(b)(3)(A) of the Act requires the Secretary to determine appropriate measures to assess the quality of care furnished by ACOs, such as measures of clinical processes and outcomes; patient, and, wherever practicable, caregiver experience of care; and utilization such as rates of hospital admission for ambulatory sensitive conditions. Section 1899(b)(3)(B) of the Act requires ACOs to submit data in a form and manner specified by the Secretary on measures that the Secretary determines necessary for ACOs to report to evaluate the quality of care furnished by ACOs. Section 1899(b)(3)(C) of the Act requires the Secretary to establish quality performance standards to assess the quality of care furnished by ACOs, and to seek to improve the quality of care furnished by ACOs over time by specifying higher standards, new measures, or both for the purposes of assessing the quality of care. Additionally, section 1899(b)(3)(D) of the Act gives the Secretary authority to incorporate reporting requirements and incentive payments related to the PQRS, EHR Incentive Program and other similar initiatives under section 1848 of the Act. Finally, section 1899(d)(1)(A) of the Act states that an ACO is eligible to receive payment for shared savings, if they are generated, only after meeting the quality performance standards established by the Secretary.

In the November 2011 final rule establishing the Shared Savings Program, we established the quality performance standards that ACOs must meet to be eligible to share in savings that are generated (76 FR 67870 through 67904). Quality performance measures are submitted by ACOs through a CMS web interface, currently the group practice reporting (GPRO) web interface, calculated by CMS from internal and claims data, and collected through a patient and caregiver experience of care survey.

Consistent with the directive under section 1899(b)(3)(C) of the Act, we believe the existing Shared Savings Program regulations incorporate a built in mechanism for encouraging ACOs to improve care over the course of their 3-year agreement period, and to reward quality improvement over time. During the first year of the agreement period, ACOs can qualify for the maximum sharing rate by completely and accurately reporting all quality measures. After that, ACOs must meet certain thresholds of performance, which are currently phased in, and are rewarded for improved performance on a sliding scale in which higher levels of quality performance translate to higher rates of shared savings (or, for ACOs subject to performance-based risk that demonstrate losses, lower rates of shared losses). In this way, the quality performance standard increases over the course of the ACO's agreement period.

Additionally, we have made an effort to align quality performance measures, submission methods, and incentives under the Shared Savings Program with the PQRS. Eligible professionals participating in an ACO may qualify for the PQRS incentive payment under the Shared Savings Program or avoid the downward PQRS payment adjustment when the ACO satisfactorily reports the

ACO GPRO measures on their behalf using the GPRO web interface.

Since the November 2011 final rule establishing the Shared Savings Program was issued, we have revisited certain aspects of the quality performance standard in the annual PFS rulemaking out of a desire to ensure thoughtful alignment with the agency's other quality incentive programs that are addressed in that rule. Specifically, we have updated our rules to align with PQRS and the EHR Incentive Program, and addressed issues related to benchmarking and scoring ACO quality performance (77 FR 69301 through 69304; 78 FR 74757 through 74764). We have identified several policies related to the quality performance standard that we would like to address in this rule at this time. Specifically, we are revisiting the current quality performance standard, proposing changes to the quality measures, and seeking comment on future quality performance measures. We are also proposing to modify the timeframe between updates to the quality performance benchmarks, to establish an additional incentive to reward ACO quality improvement, and to make several technical corrections to the regulations in subpart F of Part 425.

1. Existing Quality Measures and Performance Standard

As discussed previously, section1899(b)(3) of the Act states that the Secretary may establish quality performance standards to assess the quality of care furnished by ACOs and ''seek to improve the quality of care furnished by ACOs over time by specifying higher standards, new measures, or both. . . .'' In the November 2011 Shared Savings Program final rule, we established a quality performance standard that consists of 33 measures. These measures are submitted by the ACO through the GPRO web interface, calculated by CMS from administrative and claims data, and collected via a patient experience of care survey based on the Clinician and Group Consumer Assessment of Healthcare Providers and Systems (CG–CAHPS) survey. Although the patient experience of care survey used for the Shared Savings Program includes the core CG–CAHPS modules, this patient experience of care survey also includes some additional modules. Therefore, we will refer to the patient experience of care survey that is used under the Shared Savings Program as CAHPS for ACOs. The measures span four domains, including patient experience of care, care coordination/patient safety, preventive health, and at-risk population. The measures collected through the GPRO web interface are also used to determine whether eligible professionals participating in an ACO qualify for the 2013 and 2014 PQRS incentive payment or avoid the PQRS payment adjustment for 2015 and subsequent years. Eligible professionals in an ACO may qualify for the PQRS incentive payment or avoid the downward PQRS payment adjustment when the ACO satisfactorily reports all of the ACO GPRO measures on their behalf using the GPRO web interface.

In selecting the 33 measure set, we balanced a wide variety of important considerations. Given that many ACOs were expected to be newly formed organizations, in the November 2011 Shared Savings Program final rule (76 FR 67886), we concluded that ACO quality measures should focus on discrete processes and short-term measurable outcomes derived from administrative claims and limited medical record review facilitated by a CMS-provided web interface to lessen the burden of reporting. Because of the focus on Medicare FFS beneficiaries, our measure selection emphasized prevention and management of chronic diseases that have high impact on these beneficiaries such as heart disease, diabetes mellitus, and chronic obstructive pulmonary disease. We believed that the quality measures used in the Shared Savings Program should be tested, evidence-based, target conditions of high cost and high prevalence in the Medicare FFS population, reflect priorities of the National Quality Strategy, address the continuum of care to reflect the requirement that ACOs accept accountability for their patient populations, and align with existing quality programs and value-based purchasing initiatives.

At this time, we continue to believe it is most appropriate to focus on quality measures that directly assess the overall quality of care furnished to FFS beneficiaries. The set of 33 measures that we adopted in the November 2011 Shared Savings Program final rule includes measures addressing patient experience, outcomes, and evidence-based care processes. Thus far, we have not included any specific measures addressing high cost services or utilization since we believe that the potential to earn shared savings offers an important and direct incentive for ACOs to address utilization issues in a way that is most appropriate for their organization, patient population, and local healthcare environment. We note that while the quality performance standard is limited to these 33 measures, the performance of ACOs is measured on many more metrics and ACOs are informed of their performance in these areas. For example, an assessment of an ACO's utilization of certain resources is provided to the ACO via quarterly reports that contain information such as the utilization of emergency services or the utilization of CTs and MRIs.

As we have stated previously (76 FR 67872), our principal goal in selecting quality measures for ACOs was to identify measures of success in the delivery of high-quality health care at the individual and population levels. We believe endorsed measures have been tested, validated, and clinically accepted, and therefore, selected the 33 measures with a preference for NQF-endorsed measures. However, the statute does not limit us to using endorsed measures in the Shared Savings Program. As a result we also exercised our discretion to include certain measures that we believe to be high impact but that are not currently endorsed, for example, ACO#11, Percent of PCPs Who Successfully Qualify for an EHR Incentive Program Payment.

In selecting the final set of 33 measures, we sought to include both process and outcome measures, including patient experience of care (76 FR 67873). Because ACOs are charged with improving and coordinating care and delivering high quality care, but also need time to form, acquire infrastructure and develop clinical care processes, we continue to believe it is important to have a combination of both process and outcomes measures. We note, however, that as other CMS quality reporting programs, such as PQRS, move to more outcomes-based measures and fewer process measures over time, we may also revise the quality performance standard for the Shared Savings Program to incorporate more outcomes-based measures over time.

Therefore, we viewed the 33 measures adopted in the November 2011 Shared Savings Program final rule as a starting point for ACO quality measurement. As we stated in that rule (67 FR 67891), we plan to modify the measures in future reporting cycles to reflect changes in practice and improvements in quality of care and to continue aligning with other quality reporting programs and will add and/or retire measures as appropriate through the rulemaking process. In addition, we are working with the measures community to ensure that the specifications for the measures used under the Shared Savings Program are up-to-date. We note that we must balance the timing of the release of specifications so they are as up-to-date

as possible, while also giving ACOs sufficient time to review specifications. Our intention is to issue the specifications annually, prior to the start of the reporting period for which they will apply. For example, we issued the specifications for the 2014 reporting period in late 2013, prior to the start of the 2014 reporting period.

In the November 2011 Shared Savings Program final rule (76 FR 67873), we combined care coordination and patient safety into a single domain to better align with the National Quality Strategy and to emphasize the importance of ambulatory patient safety and care coordination. We also intended to continue exploring ways to best capture ACO care coordination metrics and noted that we would consider adding new care coordination measures for future years (67 FR 67877).

2. Proposed Changes to the Quality Measures Used in Establishing Quality Performance Standards That ACOs Must Meet To Be Eligible for Shared Savings

Since the November 2011 Shared Savings Program final rule, we have continued to review the quality measures used for the Shared Savings Program to ensure that they are up to date with current clinical practice and are aligned with the GPRO web interface reporting for PQRS. Based on the reviews, we have identified a number of proposed measure additions, deletions and other revisions that we believe would be appropriate for the Shared Savings Program. Under the following proposed measure revisions, ACOs would be assessed on 37 measures annually, an increase of 4 measures. However, as explained in more detail below, we believe the measures chosen are more outcome-oriented and would ultimately reduce the reporting burden on ACOs.

The following is a description of the proposed changes that would be effective for the 2015 reporting period and would be reported by ACOs to us in early 2016. Table 50 offers an overview of the proposed changes and is provided as a reference. (We note that the deletion and insertion of certain measures affects the composite measures, and we are proposing corresponding revisions to both the diabetes and coronary artery disease composite measures.)

• *CAHPS Stewardship of Patient Resources.* This measure is one of the unscored survey measures currently collected in addition to the seven that are already part of the current set of 33 scored measures under the Shared Savings Program. Information on the unscored survey measure modules is currently shared with the ACOs for informational purposes only. The Stewardship of Patient Resources measure asks the patient whether the care team talked with the patient about prescription medicine costs. The measure exhibited high reliability during the first two administrations of the CAHPS survey, and during testing, the beneficiaries that participated in cognitive testing said that prescription drug costs was important to them. We are proposing to add Stewardship of Patient Resources as a scored measure in the patient experience domain because we believe, based on testing, that this is an important factor for measuring a beneficiary's experience with healthcare providers. We are also proposing that the measure would be phased into pay for performance as we plan to do for other new measures, using a similar process to the phase in that was used for the measure modules in the survey that are currently used to assess ACO quality performance. We seek comment on this proposal and on any other patient experience of care measures that might be considered in future rulemaking.

• *Skilled Nursing Facility 30-Day All-Cause Readmission Measure (SNFRM).* We propose to add a 30-day all cause SNF readmission measure. CMS is the measure steward for this claims based measure which is under review at NQF under NQF #2510. This measure estimates the risk-standardized rate of all-cause, unplanned, hospital readmissions for patients who have been admitted to a Skilled Nursing Facility within 30 days of discharge from a prior inpatient admission to a hospital, CAH, or a psychiatric hospital. The measure is based on data for 12 months of SNF admissions. We believe this measure would help fill a gap in the current Shared Savings Program measure set and would provide a focus on an area where ACOs are targeting care redesign. ACOs and their ACO providers/suppliers often include post-acute care (PAC) settings and the addition of this measure would enhance the participation and alignment with these facilities. Even when the ACO does not include post-acute facilities formally as part of its organization, ACO providers/suppliers furnish other services that have the potential to affect PAC outcomes. Thus, this measure would emphasize the importance of coordinating the care of beneficiaries across these sites of care. Additionally, because this measure is calculated from claims, there would not be a burden on ACOs to collect this information.

• *All-Cause Unplanned Admissions for Patients with Diabetes Mellitus (DM), Heart Failure (HF) and Multiple Chronic Conditions.* We propose to add three new measures to the Care Coordination/Patient Safety domain. The three proposed new measures are for: all-cause unplanned Admissions for Patients with Diabetes Mellitus (DM), all-cause unplanned Admissions for Patients with Heart Failure (HF) and all-cause unplanned Admissions for Patients with Multiple Chronic Conditions. These three measures are under development though a CMS contract with Yale New Haven Health Services Corporation/Center for Outcomes Research and Evaluation (CORE) to develop quality measures specifically for ACO patients with heart failure, diabetes, and multiple chronic conditions. We believe that these measures are important to promote and assess ACO quality as it relates to chronic condition inpatient admission because they are major causes for unplanned admissions and will support the ACOs' efforts to improve care coordination for these chronic conditions. These measures are claims based, and therefore, we do not expect that they would impose any additional burden on ACOs.

• *Depression Remission at Twelve Months.* We propose to add Depression Remission at Twelve Months (NQF #0710) to the Preventive Health domain. Depression is a serious health condition for the Medicare population and can decrease patient adherence to treatment for chronic conditions. This measure would enhance our measurement of health outcomes and depression is an important health condition that we believe is appropriate to be addressed by ACOs. The measure would be submitted through the GPRO web interface, and would be aligned with PQRS. We also seek comments on the inclusion of additional behavioral health measures, such as substance abuse or mental health measures, in future rulemaking cycles.

• *Diabetes Measures for Foot Exam and Eye Exam.* Diabetes is one of the most serious, chronic health conditions for Medicare beneficiaries. It is critical that Medicare beneficiaries that have diabetes receive foot and eye exams to help prevent diabetes-related foot amputations and blindness. Both of the two new measures would be added to the Clinical Care for at Risk Population-Diabetes domain. They are endorsed by NQF (NQF #0055 and #0056). We also propose to include these two new measures as part of a new Diabetes Mellitus composite measure. These measures would also align with PQRS and the EHR Incentive Program. We believe these measures would be

appropriate additional measures for assessing quality of care furnished in ACOs to help prevent diabetes-related foot amputations and blindness.

• *Coronary Artery Disease (CAD): Symptom Management.* This new measure would be added to the Clinical Care for At Risk Population-Coronary Artery Disease domain and included in the CAD Composite Measure. The measure helps assess symptom management for CAD patients based on the percentage of adults with a diagnosis of coronary artery disease seen within a 12-month period with results of an evaluation of level of activity and an assessment of whether anginal symptoms are present or absent with appropriate management of anginal symptoms within a 12-month period. This new measure would be added to further enhance the CAD composite measure by adding an assessment of patient activity level and management of angina, which are important clinical factors for beneficiaries with CAD. The measure would align with PQRS (PQRS #0242) and the EHR Incentive Program.

• *Coronary Artery Disease (CAD): Beta Blocker Therapy—Prior Myocardial Infarction (MI) or Left Ventricular Systolic Dysfunction (LVEF<40%).* This new measure would be added to the Clinical Care for At Risk Population-Coronary Artery Disease domain and included in the CAD Composite Measure. This new measure is endorsed by NQF as NQF #0070 and would be added to further enhance the CAD composite measure. This measure reflects the number of patients with CAD who have prior myocardial infarction or LVEF <40 percent who are prescribed beta-blocker therapy and thus is designed to support improvement in outcomes for these CAD patients.

• *Coronary Artery Disease (CAD): Antiplatelet Therapy.* This new measure would be added to the Clinical Care for At Risk Population-Coronary Artery Disease domain and included in the CAD Composite Measure. The measure is defined as the percentage of patients aged 18 years and older with a diagnosis of coronary artery disease seen within a 12-month period that were prescribed aspirin or clopidogrel. This new measure is endorsed by NQF as NQF #0067 and would be added to update the CAD composite measure to reflect updated clinical guidelines for lipid control. This new measure would replace the existing measure at ACO #30, Ischemic Vascular Disease (IVD): Use of Aspirin or Another Antithrombotic, which we are proposing to remove because it no longer reflects current clinical guidelines.

• *Documentation of Current Medications in the Medical Record (NQF #0419).* This new measure would replace ACO #12 (NQF #0097) Medication Reconciliation measure. The current measure is designed to determine whether medication reconciliation was done immediately following a hospital discharge whereas the medical community has indicated to us that it is better clinical practice to perform medication reconciliation at every office visit, which NQF #0419 is designed to measure. In addition, this new replacement measure aligns with both PQRS and the EHR Incentive Program.

• *Percent of PCPs who Successfully Meet Meaningful Use Requirements.* Because the EHR Incentive Program begins its transition to a payment adjustment effective in 2015, we propose to modify the name and specifications for ACO #11 Percent of PCPs who Successfully Qualify for an EHR Incentive Program Payment so that it more accurately depicts successful use and adoption of EHR technology in the coming years. We note this measure would continue to be doubly weighted.

We seek comment on these proposed new measures.

Additionally, we have identified a number of the existing measures that have not kept up with clinical best practice, are redundant with other measures that make up the quality reporting standard, or that could be replaced by similar measures that are more appropriate for ACO quality reporting. We propose to no longer collect data on the following measures, and these measures would no longer be used for establishing the quality performance standards that ACOs must meet to qualify to share in savings:

• *ACO #12, Medication Reconciliation after Discharge from an Inpatient Facility:* As explained above, we would replace this measure with a new measure for documentation of current medications in the medical record since the medical community has indicated the importance of medication reconciliation at each office visit rather than only after an inpatient discharge.

• ACO #22, *Diabetes Composite measure: Hemoglobin A1c control (<8 percent).* The Hemoglobin A1c Control (<8%) component is being proposed for removal as we have concerns that the HbA1c level monitored in this measure is considered too low to comprehensively evaluate HbA1c control for the frail elderly population.

• ACO #24, *Diabetes Composite: Blood Pressure (<140/90) (NQF #0729).* In an effort to reduce redundant and burdensome ACO reporting of quality measures, we are proposing to no longer collect data for this measure. Although we recognize that the sample patient populations for the measures are different, we believe that there is clinical overlap between ACO #24 and ACO #28, Hypertension (HTN): Blood Pressure Control (NQF #0018). We propose to retain ACO #28, rather than ACO #24, because ACO #28 represents a more comprehensive assessment of an ACO's performance in controlling its population's high blood pressure, whereas the diabetes measure assesses a subpopulation of the broader blood pressure measure.

• ACO #25, *Diabetes Composite: Tobacco Non-use (NQF #0729).* We believe this measure is somewhat duplicative of the separate measure ACO #17, Tobacco Use Assessment and Tobacco Cessation Intervention (NQF #0028) and that the diabetes measure may capture a subpopulation of the broader measure. We prefer to use NQF #0028 as a measure of tobacco use for the Shared Savings Program because this measure has been identified as a cross-cutting measure as it represents a screening assessment that most eligible professionals may perform and is applicable to most adult patients. This measure is applicable in various outpatient settings.

• ACO #23, *Diabetes Composite: Low Density Lipoprotein (<100) (NQF #0729).* We propose to retire this and the two other lipid control measures listed below as a result of new clinical guidelines released in 2013 by the American College of Cardiology and American Heart Association (see *https://circ.ahajournals.org/content/early/2013/11/11/01.cir.0000437738.63853.7a.full.pdf*). The new guidelines recommend treating individuals with moderate-to-high dose statin therapy based on cardiac risk rather than only treating high cholesterol to specific targets.

• ACO #29, *Ischemic Vascular Disease: Complete Lipid Profile and LDL Control (<100 mg/dl) (NQF #0075).* We propose to retire this lipid control related measure because of the new clinical guidelines for statin treatment as noted in the previous bullet.

• ACO #30, *Ischemic Vascular Disease: Use of Aspirin or another Antithrombotic (NQF #0068).* This measure would be replaced by the proposed new CAD measure for antiplatelet therapy (NQF #67), which reflects current clinical guidelines.

• ACO #32, *Coronary Artery Disease (CAD) Composite: Drug Therapy for Lowering LDL Cholesterol (NQF #74).*

We propose to retire this lipid control related measure because of the new clinical guidelines for statin treatment as noted above.

We seek comment on our proposal to remove these measures from the quality performance standards.

Finally, given these proposed changes, we propose updates and revisions to the Diabetes and CAD Composites. We propose that the Diabetes Composite would include the following measures:

- ACO #26: Diabetes Mellitus: Daily Aspirin or Antiplatelet Medication Use for Patients with Diabetes Mellitus and Ischemic Vascular Disease.
- ACO #27: Diabetes: Hemoglobin A1c Poor Control.
- ACO #41: Diabetes: Foot Exam.
- ACO #42: Diabetes: Eye Exam.

We further propose that the CAD Composite would include the following measures:

- ACO #33: Angiotensin-Converting Enzyme (ACE) Inhibitor or Angiotensin Receptor Blocker (ARB) Therapy—Diabetes or Left Ventricular Systolic Dysfunction (LVEF<40%).
- ACO #43: Antiplatelet Therapy.
- ACO #44: Symptom Management.
- ACO #45: Beta-Blocker Therapy—Prior Myocardial Infarction (MI) or Left Ventricular Systolic Dysfunction (LVEF<40%).

We seek comment on these proposed composites and whether there are any concerns regarding calculation of a composite score. There has been increased interest in the use of composite performance measures over the past few years and stakeholders have raised general concerns regarding composite measures and their purpose for quality improvement. CMS worked with the National Quality Forum (NQF) and their technical expert panel in 2013 to update NQF's composite measure evaluation guidance, which in turn may also be used by developers for composite measure development. Given the general concerns around composite measures and their use, we seek comment on how we combine and incorporate component measure scoring for the composite. In particular, we are interested in whether stakeholders have any concerns about including ACO #27, reverse-scored measure, in the Diabetes Composite, and whether there are any methodological considerations we should consider when including a reverse-scored measures in composites.

To summarize, under these proposed changes, we would add 12 new measures and retire eight measures. We are also proposing to rename the EHR measure in order to reflect the transition from an incentive payment to a payment adjustment under the EHR Incentive Program and to revise the component measures within the Diabetes and CAD composites. In total, we propose to use 37 measures for establishing the quality performance standards that ACOs must meet to achieve shared savings. Although the total number of measures would increase from the current 33 measures to 37 measures, we do not anticipate that this would increase the reporting burden on ACOs. The increased number of measures is accounted for by measures that would be calculated by CMS using administrative claims data or from a patient survey. The total number of measures that the ACO would need to directly report through the CMS Web site interface would actually decrease by one, in addition to removing redundancy in measures reported.

As part of these proposed changes, we would replace the current five component diabetes composite measure with a new four component diabetes composite measure. In addition, we would replace the current two component coronary artery disease composite measure with a new four component coronary artery disease composite measure. Twenty-one of the measures would be reported by ACOs through the GPRO web interface and scored as 15 measures.

An overview of the proposed changes is provided in Table 50 which demonstrates what measures would be used to assess ACO quality under the Shared Savings Program if our proposals are finalized.

TABLE 50—MEASURES FOR USE IN ESTABLISHING QUALITY PERFORMANCE STANDARDS THAT ACOS MUST MEET FOR SHARED SAVINGS

Domain	ACO Measure No.	Measure title	Proposed new measure	NQF No./ Measure steward	Method of data submission	Pay for performance phase in R—Reporting P—Performance		
						PY1	PY2	PY3
AIM: Better Care for Individuals								
Patient/Caregiver Experience.	ACO–1	CAHPS: Getting Timely Care, Appointments, and Information.		NQF #0005, AHRQ.	Survey	R	P	P
	ACO–2	CAHPS: How Well Your Doctors Communicate.		NQF #0005 AHRQ.	Survey	R	P	P
	ACO–3	CAHPS: Patients' Rating of Doctor.		NQF #0005 AHRQ.	Survey	R	P	P
	ACO–4	CAHPS: Access to Specialists		NQF #N/A CMS/AHRQ.	Survey	R	P	P
	ACO–5	CAHPS: Health Promotion and Education.		NQF #N/A CMS/AHRQ.	Survey	R	P	P
	ACO–6	CAHPS: Shared Decision Making.		NQF #N/A CMS/AHRQ.	Survey	R	P	P
	ACO–7	CAHPS: Health Status/Functional Status.		NQF #N/A CMS/AHRQ.	Survey	R	R	R
	ACO–34	CAHPS: Stewardship of Patient Resources.	X	NQF #N/A CMS/AHRQ.	Survey	R	P	P
Care Coordination/Safety.	ACO–8	Risk-Standardized, All Condition Readmission.		Adapted NQF #1789 CMS.	Claims	R	R	P
	ACO–35	Skilled Nursing Facility 30-Day All-Cause Readmission Measure (SNFRM).	X	NQF #TBD CMS.	Claims	R	R	P

TABLE 50—MEASURES FOR USE IN ESTABLISHING QUALITY PERFORMANCE STANDARDS THAT ACOS MUST MEET FOR SHARED SAVINGS—Continued

Domain	ACO Measure No.	Measure title	Proposed new measure	NQF No./ Measure steward	Method of data submission	Pay for performance phase in R—Reporting P—Performance		
						PY1	PY2	PY3
	ACO–36	All-Cause Unplanned Admissions for Patients with Diabetes.	X	NQF #TBD CMS.	Claims	R	R	P
	ACO–37	All-Cause Unplanned Admissions for Patients with Heart Failure.	X	NQF #TBD CMS.	Claims	R	R	P
	ACO–38	All-Cause Unplanned Admissions for Patients with Multiple Chronic Conditions.	X	NQF #TBD CMS.	Claims	R	R	P
	ACO–9	Ambulatory Sensitive Conditions Admissions: Chronic Obstructive Pulmonary Disease or Asthma in Older Adults (AHRQ Prevention Quality Indicator (PQI) #5).		Adapted NQF #0275 AHRQ.	Claims	R	P	P
	ACO–10	Ambulatory Sensitive Conditions Admissions: Heart Failure (AHRQ Prevention Quality Indicator (PQI) #8).		Adapted NQF #0277 AHRQ.	Claims	R	P	P
	ACO–11	Percent of PCPs who Successfully Meet Meaningful Use Requirements.		NQF #N/A CMS.	EHR Incentive Program Reporting.	R	P	P
	ACO–39	Documentation of Current Medications in the Medical Record.	X	NQF #0419 CMS.	CMS Web Interface.	R	P	P
	ACO–13	Falls: Screening for Future Fall Risk.		NQF #0101 NCQA.	CMS Web Interface.	R	P	P
AIM: Better Health for Populations								
Preventive Health.	ACO–14	Preventive Care and Screening: Influenza Immunization.		NQF #0041 AMA–PCPI.	CMS Web Interface.	R	P	P
	ACO–15	Pneumonia Vaccination Status for Older Adults.		NQF #0043 NCQA.	CMS Web Interface.	R	P	P
	ACO–16	Preventive Care and Screening: Body Mass Index (BMI) Screening and Follow Up.		NQF #0421 CMS.	CMS Web Interface.	R	P	P
	ACO–17	Preventive Care and Screening: Tobacco Use: Screening and Cessation Intervention.		NQF #0028 AMA–PCPI.	CMS Web Interface.	R	P	P
	ACO–18	Preventive Care and Screening: Screening for Clinical Depression and Follow-up Plan.		NQF #0418 CMS.	CMS Web Interface.	R	P	P
	ACO–19	Colorectal Cancer Screening		NQF #0034 NCQA.	CMS Web Interface.	R	R	P
	ACO–20	Breast Cancer Screening		NQF #NA NCQA.	CMS Web Interface.	R	R	P
	ACO–21	Preventive Care and Screening: Screening for High Blood Pressure and Follow-up Documented.		CMS	CMS Web Interface.	R	R	P
Clinical Care for At Risk Population—Depression.	ACO–40	Depression Remission at Twelve Months.	X	NQF #0710 MNCM.	CMS Web Interface.	R	P	P
Clinical Care for At Risk Population—Diabetes.		Diabetes Composite (All or Nothing Scoring).		CMS composite	CMS Web Interface.	R	P	P

TABLE 50—MEASURES FOR USE IN ESTABLISHING QUALITY PERFORMANCE STANDARDS THAT ACOS MUST MEET FOR SHARED SAVINGS—Continued

Domain	ACO Measure No.	Measure title	Proposed new measure	NQF No./ Measure steward	Method of data submission	Pay for performance phase in R—Reporting P—Performance		
						PY1	PY2	PY3
	ACO–26	ACO–26: Diabetes Mellitus: Daily Aspirin or Antiplatelet Medication Use for Patients with Diabetes Mellitus and Ischemic Vascular Disease.	.....	NQF #0729 MNCN (individual measure).	.....	R	P	P
	ACO–27	ACO–27: Diabetes Mellitus: Hemoglobin A1c Poor Control.	.....	NQF #0059 NCQA (individual component).	CMS Web Interface.	R	P	P
	ACO–41:.	ACO–41: Diabetes: Foot Exam	X	NQF #0056 NCQA (individual component).	CMS Web Interface.	R	P	P
	ACO–42	ACO–42: Diabetes: Eye Exam	X	NQF #0055 NCQA (individual component).	CMS Web Interface.	R	P	P
Clinical Care for At Risk Population—Hypertension.	ACO–28	Hypertension (HTN): Controlling High Blood Pressure.	.....	NQF #0018 NCQA.	CMS Web Interface.	R	P	P
Clinical Care for At Risk Population—Heart Failure.	ACO–31	Heart Failure (HF): Beta-Blocker Therapy for Left Ventricular Systolic Dysfunction (LVSD).	.....	NQF #0083 AMA–PCPI.	CMS Web Interface.	R	R	P
Clinical Care for At Risk Population—Coronary Artery Disease.	.....	Coronary Artery Disease (CAD) Composite (All or Nothing Scoring).	.....	CMS composite	CMS Web Interface.	R	R	P
	ACO–33	ACO–33; Angiotensin-Converting Enzyme (ACE) Inhibitor or Angiotensin Receptor Blocker (ARB) Therapy—for patients with CAD and Diabetes or Left Ventricular Systolic Dysfunction (LVEF <40%).	.....	NQF #0066 ACC (individual component).	CMS Web Interface.	R	P	P
	ACO–43	ACO–43: Antiplatelet Therapy.	X	NQF #0067 ACC (individual component).	CMS Web Interface.	R	R	P
	ACO–44	ACO–44 :Symptom Management.	X	NQF #N/A AMA–PCPI (individual component).	CMS Web Interface.	R	R	P
	ACO–45	ACO–45: Beta-Blocker Therapy—Prior Myocardial Infarction (MI) or Left Ventricular Systolic Dysfunction (LVEF <40%).	X	NQF #0070 ACC (individual component).	CMS Web Interface.	R	R	P

Table 51 provides the current number of measures by domain and displays the total points and domain weights used for scoring purposes. The current scoring methodology is explained in the regulations at § 425.502 and in the preamble to the November 2011 final rule (76 FR 67895 through 67900). Table 52 provides a summary of the proposed number of measures by domain and the resulting total points and domain weights that would be used for scoring purposes under these proposed changes. Otherwise, the current quality scoring points methodology for calculating an ACO's overall quality performance score would continue to apply. Table 53 provides the measures that are retired/replaced.

TABLE 51—CURRENT NUMBER OF MEASURES AND TOTAL POINTS FOR EACH DOMAIN WITHIN THE QUALITY PERFORMANCE STANDARD

Domain	Number of individual measures	Total measures for scoring purposes	Total possible points	Domain weight (percent)
Patient/Caregiver Experience	7	7 individual survey module measures	14	25
Care Coordination/Patient Safety	6	6 measures, including the EHR measure double-weighted (4 points).	14	25
Preventive Health	8	8 measures	16	25
At-Risk Population	12	7 measures, including 5-component diabetes composite measure and 2-component coronary artery disease composite measure.	14	25
Total in all Domains	33	28	58	100

TABLE 52—PROPOSED NUMBER OF MEASURES AND TOTAL POINTS FOR EACH DOMAIN WITHIN THE QUALITY PERFORMANCE STANDARD

Domain	Number of individual measures	Total measures for scoring purposes	Total possible points	Domain weight (percent)
Patient/Caregiver Experience	8	8 individual survey module measures	16	25
Care Coordination/Patient Safety	10	9 measures, plus the EHR measure double-weighted (4 points).	22	25
Preventive Health	8	8 measures	16	25
At-Risk Population	11	5 measures, including 3 individual measures plus a 4-component diabetes composite measure and a 4-component coronary artery disease composite measure.	10	25
Total in all Domains	37	31	64	100

TABLE 53—SHARED SAVINGS PROGRAM MEASURES RETIRED/REPLACED

Notes	Domain	Measure title	NQF measure #/ measure steward	Method of data submission	Pay for Performance Phase In R = Reporting P=Performance		
					Performance Year 1	Performance Year 2	Performance Year 3
ACO #12 Replaced.	Care Coordination/Patient Safety.	Medication Reconciliation: Reconciliation After Discharge from an Inpatient Facility.	NQF #97 AMA–PCPI/NCQA.	GPRO Web Interface.	R	P	P
ACO #22 Retired	At Risk Population—Diabetes.	Diabetes Composite (All or Nothing Scoring): Hemoglobin A1c Control (<8 percent).	NQF #0729 MN Community Measurement.	GPRO Web Interface.	R	P	P
ACO #23 Retired	At Risk Population—Diabetes.	Diabetes Composite (All or Nothing Scoring): Low Density Lipoprotein (<100).	NQF #0729 MN Community Measurement.	GPRO Web Interface.	R	P	P
ACO #24 Retired -Redundant Measure.	At Risk Population—Diabetes.	Diabetes Composite (All or Nothing Scoring): Blood Pressure <140/90.	NQF #0729 MN Community Measurement.	GPRO Web Interface.	R	P	P
ACO #25 Retired—Redundant measure.	At Risk Population—Diabetes.	Diabetes Composite (All or Nothing Scoring): Tobacco Non Use.	NQF #0729 MN Community Measurement.	GPRO Web Interface.	R	P	P

TABLE 53—SHARED SAVINGS PROGRAM MEASURES RETIRED/REPLACED—Continued

Notes	Domain	Measure title	NQF measure #/ measure steward	Method of data submission	Pay for Performance Phase In R = Reporting P=Performance		
					Performance Year 1	Performance Year 2	Performance Year 3
ACO #29 Retired	At Risk Population—Ischemic Vascular Disease.	Ischemic Vascular Disease (IVD): Complete Lipid Profile and LDL Control <100 mg/dl.	NQF #75 NCQA	GPRO Web Interface.	R	P	P
ACO #30 Replaced.	At Risk Population—Ischemic Vascular Disease.	Ischemic Vascular Disease (IVD): Use of Aspirin or Another Antithrombotic.	NQF #68 NCQA	GPRO Web Interface.	R	P	P
ACO #32 Retired	At Risk Population—Coronary Artery Disease.	Coronary Artery Disease (CAD) Composite: All or Nothing Scoring: Drug Therapy for Lowering LDL-Cholesterol.	NQF #74 CMS (composite)/ AMA–PCPI (individual component).	GPRO Web Interface.	R	R	P

We believe that these modifications will enhance ACO quality reporting, better reflect clinical practice guidelines, streamline measures reporting, and enhance alignment with PQRS and the EHR Incentive Program. Finally, we are proposing that these measures would become effective beginning with the 2015 reporting period, and 2015 performance year (PY). All 37 measures would be phased in for ACOs with 2015 start dates according to the phase-in schedule in Table 50. ACOs with start dates before 2015 would be responsible only for complete and accurate reporting of the new measures for the 2015 performance year, and then responsible for either reporting or performance on the measures according to the phase in schedule. For example, assume a new measure is scheduled to phase in with reporting in PY1, reporting in PY2, and performance in PY3. Further assume that an ACO with a 2014 start date will be in its second performance year (PY2) when the measure becomes effective. In this example, the ACO would be responsible for complete and accurate reporting of the new measure in PY2 and for performance on the measure in PY3. If we change the assumptions in the example to say that the new measure is scheduled to phase in with reporting in PY1, performance in PY2, and performance in PY3, then the ACO would be responsible for complete and accurate reporting of the new measure in PY2 and for performance on the measure in PY3. Finally, we note that consistent with our proposed revisions to § 425.502(a) regarding quality reporting in a second and subsequent agreement period, an ACO that transitions to a new agreement period would continue to be assessed on the quality performance standard that would otherwise apply to an ACO in the third performance year of its first agreement period. Take the example of an ACO with a 2013 start date that will be responsible for reporting the new measure in the 2015 reporting period, its third performance year. Assume the measure is scheduled to phase in from reporting in PY1, reporting in PY2, and performance in PY3. In this case, the ACO would be responsible for complete and accurate reporting of the new measure in 2015 (PY3 of its first agreement period). If the ACO renews its participation agreement for another 3 years, the ACO would be responsible for performance on that measure for each year of its new agreement period because the measure is designated as a pay for performance measure in PY3 of the preceding agreement period.

Additionally, as noted in the November 2011 Shared Savings Program final rule (76 FR 67900), the Shared Savings Program uses the same sampling method used by PQRS GPRO. Specifically, the sample for the ACO GPRO must consist of at least 411 assigned beneficiaries per measure set/domain. If the pool of eligible, assigned beneficiaries is less than 411, the ACO must report on 100 percent, or all, of the assigned beneficiaries sampled. To the extent that PQRS modifies and finalizes changes in the reporting requirements for group practices reporting via the GPRO web interface, we propose to make similar modifications to ACO reporting through the GPRO web interface. Specifically, as discussed in section III.K.4.a. of this proposed rule, we are proposing to reduce the GPRO web interface minimum reporting requirements for PQRS reporting from 411 to 248 consecutively ranked and assigned patients for each measure or 100 percent of the sample for each measure if there are less than 248 patients in a given sample. We propose that the reduced sample for each measure for reporting through the GPRO web interface would also apply to ACOs. We believe that a reduction in the number of sampled beneficiaries would reduce reporting burden for ACOs while maintaining high statistical validity and reliability in results.

3. Request for Comments for Future Quality Measures

In addition to the proposed changes to the current set of 33 quality measures for the Shared Savings Program discussed above, we are interested in public comment on additional measures that we may consider in future rulemaking. We particularly welcome comments regarding the following issues:

• *Gaps in measures and additional specific measures:* We recognize that there may be gaps in the ACO quality performance standard. For example,

ACOs are charged with improving care coordination for FFS beneficiaries. While above we propose to add a measure for SNF 30-day all-cause readmission to address current gaps in SNF settings, we seek comment on whether there are additional measures that might be used to assess the ACO's performance with respect to care coordination in post-acute care and other settings. We also recognize the need to balance filling gaps in the quality performance standard with the reporting burden on ACOs. To the extent possible, we wish to identify measures for filling any gaps in the quality performance standard that would not increase the reporting burden on ACOs unduly. We welcome comments on specific measures or measure groups that may be considered in future rulemaking to fill in gaps that may exist for assessing ACO quality performance. For example, we seek input on measures that address the quality of care in the various different settings that may be part of an ACO, such as post-acute care settings including SNF or home health. We note that any suggestions for new measures would be more thoroughly discussed in a future rulemaking cycle prior to being adopted as part of the quality performance standard under the Shared Savings Program and if we deem it appropriate we would also submit them to the NQF Measures Application Partnership (MAP) via the list of Measures Under Consideration that the Secretary annually makes available to the public as part of the pre-rulemaking process under section 1890A(a)(2) of the Act for the purpose of seeking multi-stakeholder group input, consistent with the requirements of section 3014 of the Affordable Care Act, if the measures have not already been reviewed by the MAP.

• *Caregiver experience of care:* While we recognize there is a concern about patient subjectivity to surveys, we include measures based on data collected via the patient experience of care survey in the quality performance standard because we believe patients' perception of their care experience reflects important aspects of the quality of the care they receive, such as communication and patient engagement in decision-making, that are not adequately captured by other measures. As such, patient surveys are important complements to the other process of care and outcomes measures. For this reason, we stated in November 2011 Shared Savings Program final rule (76 FR 67874) that we intended to expand the quality measures over time to include more caregiver experience measures. Therefore, we seek comment on additional specific caregiver experience of care measures that might be considered in future rulemaking.

• *Alignment with Value-Based Payment Modifier (VM) measures:* We desire to continue to align with other Medicare quality initiatives in order to reduce ACO burden and streamline quality reporting and indicators. In the CY 2013 PFS final rule with comment period (77 FR 69313) we established a policy not to apply the VM in CY 2015 and CY 2016 to groups of physicians that participate in ACOs under the Shared Savings Program. Although section 1848(p)(4)(B)(iii)(I) of the Act gives the Secretary discretion to apply the VM to specific physicians and groups of physicians as the Secretary determines appropriate for 2015 and 2016, consistent with section 1848(p)(4)(B)(iii)(II), which requires application of the VM to all physicians and groups of physicians beginning not later than January 1, 2017, we are proposing to start applying the VM to physicians participating in ACOs beginning in 2017. In addition, in section III.K.4.b of this proposed rule, we discuss our proposal to also apply the VM to all nonphysician eligible professionals in groups with 2 or more eligible professionals and to solo practitioners who are nonphysician eligible professionals, including eligible professionals participating in ACOs, starting in CY 2017. To that end, we are seeking comment on whether there are synergies that can be created by aligning the ACO quality measures set with the measures used under the VM. For example, in the Value-based Modifier program, there are two claims-based composite outcomes measures, namely, the Composite of Acute Prevention Quality Indicators (PQIs) comprised by 3 measures (NQF #279 Bacterial Pneumonia Admission Rate, NQF #280 Dehydration Admission Rate, and NQF #281 Urinary Tract Infection Admission Rate) and the Composite of Chronic Prevention Quality Indicators (PQIs) comprised by 6 measures (NQF #638 Uncontrolled Diabetes, NQF #272 Short Term Diabetes complications, NQF #274 Long Term Diabetes Complications, NQF #285 Lower Extremity Amputation for Diabetes, NQF #275 COPD, and NQF #277 Congestive Heart Failure). (See *https://www.cms.gov/Medicare/Medicare-Fee-for-Service-Payment/PhysicianFeedbackProgram/Downloads/2012–ACSC-Outcomes-Msrs.pdf*). Because these VM measures are claims based measures, no additional reporting burden would be added to ACOs. In addition, we note that two of these measures are currently a part of the ACO quality measures set, specifically, NQF #275, ''Ambulatory Sensitive Conditions Admissions: Chronic Obstructive Pulmonary Disease,'' and NQF #277: ''Ambulatory Sensitive Conditions Admissions: Congestive Heart Failure.'' Although we are not proposing changes at this time to align with the measures used under the VM, we are seeking comment on whether the VM composites should be considered in the future as a replacement for the two ACO claims based ambulatory sensitive conditions admissions (ASCA) measures.

• *Specific measures to assess care in the frail elderly population:* We recognize providers face challenges in caring for the health needs of the frail elderly. There are, however, many challenges in defining and measuring the quality of care for this population. In the November 2011 Shared Savings Program final rule, we incorporated a measure focused on the frail elderly population—ACO#13 Screening for Fall Risk, which rewards ACOs for incorporating fall risk assessments in the redesign of their care processes. Our expectation was that practitioners would use the results of the fall risk assessments to promote meaningful conversations with their frail elderly patients about fall risks and ways to prevent or reduce these events. We also stated that as ACOs gain more experience integrating the fall risk screening into their day-to-day practices, we planned to revisit the frail elderly measures in future rulemaking to build upon these achievements and to address additional issues for the frail elderly (76 FR 67886). We welcome comments with suggestions of new measures of the quality of care furnished to the frail elderly population that we may consider adopting in future rulemaking.

• *Utilization:* We did not include utilization measures in the quality performance standards adopted in the November 2011 final rule establishing the Shared Savings Program because we believed that ACOs have an intrinsic motivation to reduce inappropriate utilization of services in order to achieve shared savings. However, in recognition of the value of feedback on utilization, we include utilization data as part of the quarterly aggregate reports provided to ACOs. We welcome comments on whether it is sufficient for such utilization information to be included in the aggregate quarterly reports to ACOs or whether utilization measures should also be used to assess the ACO's quality performance as an

added incentive to provide more efficient care. If commenters are interested in having such utilization measures included in the quality performance standard, we welcome specific comments on what measures would be most appropriate and suggestions for how to risk adjust these measures.

• *Health outcomes:* Currently, the quality performance standard includes a self-reported health and functional status measure as part of the patient experience of care survey. We finalized this measure as pay for reporting for all 3-years of the agreement period to allow ACOs to gain experience with the measure (which had not previously been used for accountability purposes in any pay-for-performance initiative) and to provide important information to them on improving the health outcomes of the population they serve (76 FR 67876). Patient-reported outcomes, although subjective, provide valuable information not captured by other means. We continue to believe that it is appropriate to require ACOs to report this measure and to maintain the performance standard at full and accurate reporting in order to allow ACOs to gain experience with the measure. We welcome suggestions as to whether and when it would be appropriate to include a self-reported health and functional status measure in the quality performance standard. We specifically welcome comments on the appropriateness of using a tool such the Health Outcomes Survey for health plans which assesses changes in the physical and mental health of individual beneficiaries over time. This survey would require at least 2 years of reporting by the same beneficiary and assesses function over time rather than function at a particular point in time. We also welcome suggestions for alternatives to self-reported measures that may be considered in the future.

• *Measures for retirement:* Some measures may not provide sufficiently useful information for assessing ACO quality performance since they are ''topped out'', meaning that all but a very few of organizations achieve near perfect performance on the measure. As a result, such measures may no longer provide meaningful information regarding an ACO's quality performance. Other examples of candidates for retirement could be measures that do not drive quality improvement. We seek input from commenters on any measures that should be considered for retirement in future rulemaking. We welcome comments on whether to continue to require ''topped out'' measures be included as pay for reporting measures. For example, it could be important to require ACOs to continue to report such measures so that we can assess performance to ensure quality of care does not decline or for other reasons. In addition, we note that as discussed below we are proposing changes to the benchmarking methodology for topped out measures.

• *Additional public health measures:* We may propose to include an additional preventive health measure in the quality measure set under the Shared Savings Program in future rulemaking. Specifically, we are considering adding ''Preventive Care and Screening: Unhealthy Alcohol Use: Screening and Brief Counseling'' (NQF #2152). This measure would reflect screening of Medicare beneficiaries covered under the existing Medicare benefit referred to as the ''Screening and Behavioral Counseling Interventions in Primary Care to Reduce Alcohol Misuse'' benefit. We welcome comments on the potential addition of this measure and would consider any comments received in developing any future proposal with respect to this measure.

4. Accelerating Health Information Technology

a. Overview

HHS believes all patients, their families, and their healthcare providers should have consistent and timely access to their health information in a standardized format that can be securely exchanged between the patient, providers, and others involved in the patient's care. (HHS August 2013 Statement, ''Principles and Strategies for Accelerating Health Information Exchange.'' *http://www.healthit.gov/policy-researchers-implementers/accelerating-health-information-exchange-hie*). The Department is committed to accelerating health information exchange (HIE) through the use of electronic health records (EHRs) and other types of health information technology (HIT) across the broader care continuum through a number of initiatives including: (1) alignment of incentives and payment adjustments to encourage provider adoption and optimization of HIT and HIE services through Medicare and Medicaid payment policies; (2) adoption of common standards and certification requirements for interoperable HIT; (3) support for privacy and security of patient information across all HIE-focused initiatives; and (4) governance of health information networks. These initiatives are designed to encourage HIE among health care providers, including professionals and hospitals eligible for the Medicare and Medicaid EHR Incentive Programs and those who are not eligible for the EHR Incentive Programs, as well as those providers that are participating in the Medicare Shared Savings Program in an ACO and those that are not, and are designed to improve care delivery and coordination across the entire care continuum. For example, the Transition of Care Measure #2 in Stage 2 of the Medicare and Medicaid EHR Incentive Programs requires HIE to share summary records for more than 10 percent of care transitions. In addition, to increase flexibility in the Office of the National Coordinator for Health IT's (ONC's) HIT Certification Program and expand HIT certification, ONC has issued a proposed rule concerning a voluntary 2015 Edition of EHR certification criteria, which would more easily accommodate certification of HIT for technology used in health care settings where health care providers are not typically eligible for incentive payments under the EHR Incentive Programs, to facilitate greater HIE across the entire care continuum.

We believe that HIE and the use of certified EHRs can effectively and efficiently help ACOs and participating providers improve internal care delivery practices, support management of patient care across the continuum, and support the reporting of eCQMs. More information on the Voluntary 2015 Edition EHR Certification Criteria Proposed Rule is available at *http://healthit.gov/policy-researchers-implementers/standards-and-certification-regulations*.

b. Electronic Reporting of Quality Measure Data

We believe that certified EHR technology used in a meaningful way is one piece of a broader health information technology infrastructure needed to reform the health care system and improve health care quality, efficiency, and patient safety. Through our programs such as the Medicare and Medicaid EHR Incentive Programs and the Stage 2 meaningful use (MU) requirements we seek to expand the meaningful use of certified EHR technology. Adoption of certified EHR technology (CEHRT) by ACO participants and ACO providers/suppliers may help support efforts to achieve improvements in patient care and quality, including reductions in medical errors, increased access to and availability of records and data, improved clinical decision support, and the convenience of electronic prescribing. Additionally, we believe

that the potential for the Shared Savings Program to achieve its goals could be further advanced by direct EHR-based quality data reporting by ACOs and their ACO participants and ACO providers/suppliers. This could help reinforce the use of CEHRT, reduce errors in quality measure submission, and achieve data submission efficiencies. We believe ACOs and their providers should be leaders in encouraging EHR adoption and should be using CEHRT to improve quality of care and patient safety and to reduce errors.

Furthermore, beginning in 2015, eligible professionals that do not successfully demonstrate meaningful use of certified EHR technology will be subject to a downward payment adjustment under Medicare that starts at −1 percent and increases each year that an eligible professional does not demonstrate meaningful use, to a maximum of −5 percent. A final rule establishing the requirements of Stage 2 of the Medicare EHR Incentive Program appeared in the September 4, 2012 **Federal Register** (Medicare and Medicaid Programs; Electronic Health Record Incentive Program—Stage 2 Final Rule) (77 FR 53968). Included in this final rule are the meaningful use and other requirements that apply for the payment adjustments under Medicare for covered professional services provided by eligible professionals failing to demonstrate meaningful use of CEHRT, including the CQM reporting component of meaningful use. As previously discussed in section III.M.2, we are proposing to revise the name and the specifications for the quality measure regarding EHR adoption to take the changing incentives into account. Specifically, we are proposing to change the name of ACO #11 from ''Percent of PCPs Who Successfully Qualify for an EHR Incentive Program Payment'' to ''Percent of PCPs Who Successfully Meet Meaningful Use Requirements'' to more accurately reflect what is being measured.

Additionally, under a group reporting option established for the Medicare EHR Incentive Program (77 FR 54076 through 54078), EPs participating in an ACO under the Shared Savings Program who extract the data necessary for the ACO to satisfy the quality reporting requirements of the Shared Savings Program from CEHRT would satisfy the CQM reporting component of meaningful use as a group for the Medicare EHR Incentive Program. In addition to submitting CQMs as part of an ACO, EPs have to individually satisfy the other objectives and associated measures for their respective stage of meaningful use.

However, we clarify that if an EP intends to use this group reporting option to meet the CQM reporting component of meaningful use, then the EP would have to extract all its CQM data from a CEHRT and report it to the ACO (in a form and manner specified by the ACO) in order for the EP to potentially qualify for the Medicare EHR Incentive Program. The ACO must also report the GPRO web interface measures and satisfy the reporting requirements under the Shared Savings Program in order for its EPs to satisfy the CQM reporting component of meaningful use for the Medicare EHR Incentive Program.

Although these group reporting requirements were established under the Medicare EHR Incentive Program, the Shared Savings Program regulations were not amended to reflect these reporting requirements. Therefore, we propose to amend the regulations governing the Shared Savings Program to align with the requirements previously adopted under the Medicare EHR Incentive Program in order to provide that EPs participating in an ACO under the Shared Savings Program can satisfy the CQM reporting component of meaningful use for the Medicare EHR Incentive Program when the ACO reports GPRO web interface measures by adding new paragraph (d) to § 425.506. This new paragraph will provide that EPs participating in an ACO under the Shared Savings Program satisfy the CQM reporting component of meaningful use for the Medicare EHR Incentive Program when: (1) The eligible professional extracts data necessary for the ACO to satisfy its GPRO quality reporting requirements from CEHRT; and (2) the ACO satisfactorily reports the ACO GPRO measures through a CMS Web interface. Although this proposal will align the Medicare Shared Savings Program regulations with the existing requirements under the Medicare EHR Incentive Program, we intend to take steps in the future to better align and integrate EHR use into quality reporting under the Shared Savings Program.

We recognize there are operational constraints that must be considered when developing policies related to electronic reporting of quality measures under the Shared Savings Program. First, many ACO legal entities are conveners of Medicare enrolled entities, but are not Medicare-enrolled themselves, that is, many ACO legal entities do not provide direct health care services, and therefore, may not thus far have had a need for an EHR. Further, ACO participants and ACO providers/suppliers may be at different levels of EHR adoption. For example, an ACO may have ACO participants that do not own an EHR. Other ACOs may have ACO participants that have and use EHR platforms, but have chosen different platforms, each requiring different modifications to make them uniformly extract required quality data. In addition, ACOs have told us that different EHR platforms may not yet be seamlessly interoperable. Finally, within each ACO participant, there may be differing levels of EHR use among the ACO providers/suppliers that are EPs. Operationally, a few options could be considered for implementing the eCQM portion of the meaningful use requirements in the future. For example, we could consider whether it would be preferable for the EPs within each ACO participant to individually submit EHR data to CMS, whether each ACO participant should report as a group; whether the ACO itself should aggregate EHR data from its ACO participants and then submit the quality measures to CMS; or whether the ACO could submit quality measure data via a data submission vendor that would be responsible for aggregating and submitting the data on the ACO's behalf.

Although we are not proposing any new requirements regarding EHR based reporting under the Shared Savings Program at this time, we welcome suggestions and comments about these issues which we would consider in developing any future proposals. We especially seek comment on the feasibility of an ACO to be a convener and submitter of quality measures through an EHR or alternative method of electronically reporting quality measures to us. We are interested in the opportunities and barriers to ACO EHR quality measure reporting, as well as ways to overcome any barriers. We also welcome suggestions on alternative ways that we might implement EHR-based reporting of quality measures in the Shared Savings Program, such as directly from EHRs or via data submission vendors. We seek comment on whether EHR reporting should be a requirement for all Shared Savings Program ACOs or if the requirement for EHR reporting should be phased in gradually, for instance through a separate risk track or by the establishment of a ''core and menu'' quality measure set approach in which we would establish a core set of required quality measures and then supplement these required measures with a menu of additional measures (such as EHR-based reporting) from

which an ACO could choose. This approach could provide ACOs with additional flexibility and allow them to report on quality measures that better reflect any special services they provide. As an alternative, we also seek comment on whether ACO providers/suppliers could use a local registry-like version of the GPRO Web interface to capture relevant clinical information and to monitor performance on all Medicare patients throughout the year and to more easily report quality data to CMS annually.

3. Quality Performance Benchmarks

a. Overview of Current Requirements

Section 1899(b)(3)(C) of the Act directs the Secretary to ''establish quality performance standards to assess the quality of care furnished by ACOs'' and to ''seek to improve the quality of care furnished by ACOs over time by specifying higher standards, new measures, or both for purposes of assessing such quality of care.'' Under the current Shared Savings Program regulations at § 425.502, the following requirements with regard to establishing a quality performance benchmark for measures apply: (1) During the first performance year of an ACO's agreement period, the quality performance standard is set at the level of complete and accurate reporting; (2) during subsequent performance years, the quality performance standard will be phased in such that ACOs will be assessed on their performance on certain measures (see Table 1 of the November 2011 Shared Savings Program final rule (76 FR 67889 through 67890), for details of the transition for each of the 33 measures); (3) we designate a quality performance benchmark and minimum attainment level for each measure, and establish a point scale for the level of achievement on each measure; and (4) we define quality performance benchmarks using FFS Medicare data or using flat percentages when the 60th percentile is equal to or greater than 80.00 percent.

Section 425.502(b)(2) governs the data that CMS uses to establish the quality performance benchmarks for quality performance measures under the Shared Savings Program. Consistent with section 1899(b)(3)(C) of the Act, which requires CMS to seek to improve the quality of care furnished by ACOs participating in the Shared Savings Program over time, § 425.500(b)(3) states that in establishing the measures to assess the quality of care furnished by an ACO, CMS seeks to improve the quality of care furnished by ACOs over time by specifying higher standards, new measures, or both.

Subsequently, we discussed several issues related to the establishment of quality performance benchmarks in the CY 2014 PFS final rule with comment period (78 FR 74759 through 74764). In that rule (78 FR 74760), we finalized a proposal to combine all available Medicare FFS quality data, including data gathered under PQRS (through both the GPRO web interface tool and other quality reporting mechanisms) and other relevant FFS quality data reported to CMS (including data submitted by Shared Savings Program and Pioneer ACOs) to set the quality performance benchmarks for 2014 and subsequent reporting periods. In establishing this policy, we determined that it was appropriate to use all FFS data rather than only ACO data, at least in the early years of the program, to avoid the possibility of punishing high performers where performance is generally high among all ACOs. We did not finalize a proposal to use Medicare Advantage (MA) data alone or in combination with FFS data in the short-term. Instead, we stated in the CY 2014 PFS final rule with comment period (78 FR 74760) that we intended to revisit the policy of using MA data in future rulemaking when we have more experience setting benchmarks for ACOs.

Additionally, in the CY 2014 PFS final rule with comment period, we retained the ability to use flat percentages to set benchmarks when many reporters demonstrate high achievement on a measure, so that ACOs with high performance on a measure are not penalized (78 FR 74760). More specifically, we will now use all available FFS data to calculate benchmarks, including ACO data, except where performance at the 60th percentile is equal to or greater than 80 percent for individual measures. In these cases, a flat percentage will be used to set the benchmark for the measure. This policy allows ACOs with high scores to earn maximum or near maximum quality points while still allowing room for improvement and rewarding that improvement in subsequent years.

As previously discussed, the first year of an ACO's agreement period is pay for reporting only, so ACOs earn their maximum sharing rate for completely and accurately reporting all 33 quality measures. Quality performance benchmarks are released in subregulatory guidance prior to the start of the quality reporting period for which they apply so that as we phase in measures to pay for performance ACOs are aware of the actual performance rates they will need to achieve to earn the maximum quality points under each domain. In the November 2011 Shared Savings Program final rule, we indicated our intent to gradually raise the minimum attainment level to continue to incentivize quality improvement over time and noted that we would do so through future rulemaking after providing sufficient advance notice with a comment period to allow for industry input (76 FR 67898). In the CY 2014 PFS final rule with comment period, we reiterated our policy of setting quality performance benchmarks prior to the reporting year for which they would apply (78 FR 74759). Specifically, we use data submitted in 2013 for the 2012 reporting period to set the quality performance benchmarks for the 2014 reporting period. However, we recognize that in the first few years of the Shared Savings Program, we will only have a limited amount of data for some measures, which may cause the benchmarks for these measures to fluctuate, possibly making it difficult for ACOs to improve upon their previous year's performance. Stakeholders have also told us that they prefer to have a stable benchmark target so that they can be rewarded for quality improvement from one year to the next. Therefore, instead of modifying quality performance benchmarks annually, in the CY 2014 PFS final rule with comment period (78 FR 74761) we stated that we would set the benchmarks for the 2014 reporting year in advance using data submitted during 2013 for the 2012 reporting year, and continue to use that benchmark for 2 reporting years (specifically, the 2014 and 2015 reporting years). We further indicated our intention to revisit this issue in future rulemaking to allow for public comment on the appropriate number of years that a benchmark should apply before it is updated.

b. Proposed Revisions for Benchmarking Measures That Are ''Topped Out''

In the discussion of measures above, we indicated that some measures may be topped out, meaning that all but a very few of organizations achieve near perfect performance on the measure. Since publication of the quality performance benchmarks for the 2014 and 2015 quality reporting years, a number of ACOs have noted that using available national FFS data has resulted in some benchmarks where the 80th or 90th percentiles approach 100 percent performance on the measure. Stakeholders have suggested it is unreasonable to hold organizations, especially very large organizations such as ACOs to this high standard and that

it may be easier for smaller and medium size physician practices to achieve higher levels of performance given their smaller patient populations. We believe these concerns have merit because we have looked at the FFS data submitted to CMS and agree it is possible that smaller practices or practices with smaller populations may be able to achieve these higher levels of performance more easily than larger practices or organizations with larger patient populations. Therefore, we are proposing certain modifications to our benchmarking methodology to address the way that such ''topped out'' measures are treated for purposes of evaluating an ACO's performance. Specifically, when the national FFS data results in the 90th percentile for a measure are greater than or equal to 95 percent, we would use flat percentages for the measure, similar to our policy under § 425.502(b)(2)(ii) of using flat percentages when the 60th percentile is greater than 80 percent to address clustered measures. We believe this approach would address concerns about how topped out measures affect the quality performance standard while continuing to reward high performance, and being readily understandable to all. We propose to revise § 425.502(b)(2)(ii) to reflect this proposed policy. We invite comments on this proposal. We also invite comments on other potential approaches for addressing topped out measures. We would use any comments received to help develop any future proposals regarding topped out measures. For example, we welcome comments on whether we should drop topped out measures from the measures set, fold them into composites, or retain them but make them pay for reporting only.

c. Proposed Quality Performance Standard for Measures That Apply to ACOs That Enter a Second or Subsequent Participation Agreement

As discussed previously, during an ACO's first participation agreement period, the quality performance standard during the first performance year is initially set at the level of complete and accurate reporting, and then, during performance years 2 and 3 within the ACO's first agreement period, the quality performance standard is phased in such that the ACO is assessed on its performance on selected measures. We did not directly indicate the quality performance standard that would apply if an ACO were to subsequently enter into a second or subsequent participation agreement. However, § 425.502(a)(1) provides that during the first performance year of an ACO's agreement period, CMS will define the quality performance standard at the level of complete and accurate reporting of all quality measures. As drafted, this regulation could be read to imply that the quality performance standard for ACOs in the first performance year of a subsequent agreement period would also be set at the standard of full and accurate reporting. We do not believe it is appropriate for an ACO in a second or subsequent agreement period to report quality measures on a pay-for-reporting basis if they have previously reported these measures in a prior agreement period. The ACO would have gained experience reporting the quality measures during the earlier agreement period, and as a result, we do not believe it would be necessary to provide any further transition period. Rather, we believe it would be appropriate to assess the ACO's actual performance on measures that have been designated as pay for performance during all 3 years of the second or subsequent participation agreement period.

Accordingly, we propose to revise our regulations to expressly provide that during a second or subsequent participation agreement period, the ACO would continue to be assessed on its performance on each measure that has been designated as pay for performance. That is, the ACO would continue to be assessed on the quality performance standard that would otherwise apply to an ACO if it were in the third performance year of the first agreement period. We will do this by modifying § 425.502(a)(1) and (a)(2) to indicate that the performance standard will be set at the level of complete and accurate reporting of all quality measures only for the first performance year of an ACO's first agreement period, and that during subsequent agreement periods, pay for performance will apply for all three performance years. As proposed earlier in this section, new measures that are added to the quality performance standard would be phased in along the timeline indicated when the measure is added and in operational documents.

d. Proposed Timing for Updating Benchmarks

As discussed in the CY 2014 PFS final rule with comment (78 FR 74761), we have further considered suggestions from ACOs regarding the appropriate number of years that a benchmark should apply before it is updated. ACOs suggested that there be a longer period of time to gain experience with the performance measure, before benchmarks are further updated. ACOs also indicated that it would be desirable to set and leave benchmarks static for additional performance years so that they have a quality improvement target to strive for that does not change frequently. ACOs believe that a stable benchmark would enhance their ability to be rewarded for quality improvement, as well as quality achievement, from one year to the next. We recognize, however, that there could be some concerns about lengthening the period between updates to the quality performance benchmarks. The current benchmarks as discussed previously, for example, are based on a combination of all available Medicare FFS quality data, including data gathered under PQRS, the Shared Savings Program and Pioneer ACO Model, but not MA quality data. To the extent that the benchmarks are based on quality data reported by a large number of ACOs and other FFS entities, we believe it is reasonable to use them to assess the quality performance of ACOs. Furthermore, as discussed in the 2014 PFS final rule with comment period (78 FR 74761), we are also persuaded that we should establish a longer period between updates to the benchmarks in order to provide ACOs with a more stable target for measuring quality improvement. In the absence of this stability, it could be very difficult to assess quality improvement from year to year.

In the 2014 PFS final rule with comment period, we noted that we intended to address the number of years between updates to the benchmarks again in future rulemaking in order to allow for public comment. Therefore, we considered how long benchmarks should be in place before they are updated. We considered a range of options, from setting benchmarks every 2 years to setting benchmarks every 5 years. For example, we considered the option of setting benchmarks every 3 years. However, we note that ACO agreement periods are 3 years long and a new cohort of ACOs enters the program each year. As a result, setting benchmarks every 3 years might advantage some ACOs over others, particularly ACOs that have an agreement period during which benchmarks are not updated. Therefore, we propose to update benchmarks every 2 years. We believe 2 years is an appropriate amount of time because the Shared Savings Program is relatively new and we do not have extensive experience in setting benchmarks under the Shared Savings Program. Updating the benchmarks every 2 years would enable us to be more flexible and give us the ability to make adjustments more

frequently if appropriate. We note, however, that we may revisit this policy as more ACOs enter the program, more FFS data is collected which could help us better understand to what extent benchmarks should vary from year to year, or if we make any future proposals regarding the use of MA quality data for setting benchmarks.

Accordingly, we propose to revise § 425.502(b) to add a new paragraph (b)(4)(i), which will provide that CMS will update benchmarks every 2 years. To illustrate this proposed policy, the existing quality performance benchmarks, which are based on data submitted in 2013 for the 2012 reporting period would apply for a total of 2 performance years (the 2014 and 2015 performance years) after which we would reset the benchmarks for all ACOs based on data for the 2014 reporting period that is reported during 2015. These updated benchmarks would apply for the 2016 and 2017 performance years. This timeline is summarized in Table 54. Under this proposal, ACOs would have a stable target for quality achievement for 2 years, which should improve the opportunity for ACOs to be rewarded for improvement from year to year compared to that benchmark. We also propose to revise § 425.502(b) to add a new paragraph (b)(4)(ii), which will provide that for measures introduced in the first year of the 2-year benchmarking cycle, the benchmark will be established in the second year and updated along with the other measures at the start of the next 2-year benchmarking cycle.

We seek comment on this proposal. We specifically seek comment on the appropriate number of years that a benchmark should remain stable before it is updated. We also welcome comments about when annual updates might be appropriate such as when there is a substantive specification change to a measure between years. For instance, the age range used for the breast cancer screening measure is different in 2014 than in 2013, or when the measure owner modifies or retires a measure. Additionally, although we are proposing to retain our current policy of using the most recent available data to set the quality performance benchmarks, we also seek comment on whether data from other reporting periods should also be considered in establishing benchmarks that will apply for 2 performance years. Specifically, we seek input on whether data from multiple years should be used to help provide more stable benchmarks. For example, should data submitted for the 2013 and 2014 reporting periods be combined to set benchmarks for the 2016 and 2017 performance years?

TABLE 54—PROPOSED TIMELINE FOR SETTING AND UPDATING QUALITY PERFORMANCE BENCHMARKS

Reporting period for data used to set benchmark	Year data is collected, analyzed, and benchmark is published	Performance year and reporting period to which benchmark applies
2012	2013	2014 & 2015
2014	2015	2016 & 2017
2016	2017	2018 & 2019

4. Rewarding Quality Improvement

a. Current Approach To Rewarding ACOs for Both Quality Attainment and Quality Improvement

ACOs must meet a CMS-specified quality performance standard in order to be eligible to share in savings. The Shared Savings Program quality performance standard currently consists of a set of quality measures spanning four domains that are collected via the patient and caregiver experience of care survey, calculated by CMS from internal administrative and claims data, and submitted by the ACO through the CMS web interface. The four domains include patient/caregiver experience of care, care coordination/patient safety, preventive health, and at-risk populations. The measures collected through the CMS web interface are also used to determine whether eligible professionals that bill through the TIN of an ACO participant qualify for the PQRS incentive payment or avoid the downward PQRS payment adjustment. Eligible professionals that bill through the TIN of an ACO participant may qualify for the PQRS incentive payment or avoid the downward PQRS payment adjustment when the ACO satisfactorily reports the ACO GPRO quality measures on their behalf.

Under current policy, the quality performance standard is defined at the level of full and complete reporting for the first performance year of an ACO's agreement period. After that, an ACO must meet certain thresholds of performance and is rewarded on a sliding scale in which higher levels of quality performance translate to higher rates of shared savings. This scale, therefore, rewards improvement over time, since higher performance translates to higher shared savings. For example, an ACO that performs at the 80th percentile one year and then at the 90th percentile the next year would receive a higher level of shared savings in its second year than its first year, based on its improved quality performance. In this way, ACOs are rewarded for both attainment and improvement. This is particularly true when benchmarks are stable for more than one year, as proposed previously.

We recognize that rewards for both quality attainment, as well as quality improvement are not always built in to pay-for-performance initiatives. For example, in HVBP (Hospital Value-Based Purchasing) hospitals are scored based on the higher of their achievement or improvement on specified quality measures, with some hospitals receiving incentive payments if their overall performance is high enough relative to their peers. In the November 2011 final rule establishing the Shared Savings Program (76 FR 67897), we indicated in response to comments that we believe the approach of offering more points for better quality performance also offers an implicit incentive for continuous quality improvements, since it incorporates a sliding scale in which higher levels of quality performance translate to higher sharing rates. We believed that high performing ACOs should do well under this approach since it recognizes and provides incentives for ACOs to maintain high quality performance in order to maximize their share of savings and minimize their share of losses.

b. Additional Rewards for Quality Improvement

ACOs and other stakeholders have suggested that the current quality points scale described above does not adequately reward ACOs for both quality attainment and improvement. They request that we further strengthen

the incentives for quality improvement by including an additional explicit reward for those ACOs that improve from one year to the next.

As discussed previously, the existing quality performance standard includes a sliding point scale that rewards ACOs for certain levels of attainment. In addition, we note that under the proposal discussed above in which we propose to establish a stable quality performance benchmark for a period of 2 years, there should be an even greater opportunity for every ACO to demonstrate improvement and be rewarded for that improvement from year to year. However, we are persuaded by suggestions from stakeholders that an additional, more explicit reward should be included for ACOs that improve their quality scores from year to year. The success of the Shared Savings Program is partially dependent on ACOs further improving the quality of the care they provide, not merely maintaining current levels of quality. Therefore, we are proposing to revise our existing quality scoring strategy to explicitly recognize and reward ACOs that make year-to-year improvements in their quality performance scores on individual measures. We believe that offering an additional and explicit reward for improving quality performance would complement and reinforce our current quality performance scoring system that implicitly takes into account improvements over prior performance and rewards ACOs with a greater share in savings for greater quality performance. We believe that adding an explicit incentive places even greater emphasis on quality improvement, encouraging all ACOs to continue to improve quality for their patient populations over time, in addition to maintaining existing high quality levels.

To develop such an approach, we looked to the MA program, which has already successfully developed and implemented a formula for measuring quality improvement. The MA five star rating program computes an improvement change score which is defined as the score for a measure in performance year minus the score in previous performance year. The MA five star rating program then measures each plan's net quality improvement by calculating the total number of significantly improved quality measures and subtracting the total number of significantly declined quality measures. This is an approach that we believe is also appropriate for measuring quality improvement for ACOs. (For more details on the formula for calculating the MA quality improvement measure, see the discussion in ''Medicare 2014 Part C & D Star Rating Technical Notes'', Attachment I, page 80, which can be downloaded from the CMS Web site at *http://www.cms.gov/Medicare/Prescription-Drug-Coverage/PrescriptionDrugCovGenIn/PerformanceData.html.)*

We continue to believe it is important to recognize that the Shared Savings Program is not a managed care program. Unlike MA, this program's design retains FFS flexibility and the freedom of choice available to beneficiaries under Medicare Parts A and B which generally necessitates different program requirements. However, in this case we believe there would be significant advantages for the Shared Savings Program to adopt the formula for a quality improvement measure that MA has already developed and implemented rather than attempt to develop a new formula for a quality improvement measure. In particular, the MA measure formula has already been fully developed and vetted with stakeholders, in the context of the MA program, with detailed operational specifications and previously shared with the public.

In addition, we believe it is important to add a quality improvement measure to the Shared Savings Program in a manner that would minimize disruption for ACOs. We believe it would be undesirable for both ACOs and the program if the quality improvement measure were added in a way that required extensive revisions to the current quality measurement methodology, for example, reweighting of the four quality measure domains. Therefore, we propose to add a quality improvement measure to award bonus points for quality improvement to each of the existing four quality measure domains. For each quality measure domain, we would award an ACO up to two additional bonus points for quality performance improvement on the quality measures within the domain. These bonus points would be added to the total points that the ACO achieved within each of the four domains. Under this proposal, the total possible points that can be achieved in a domain, including up to 2 bonus points, could not exceed the current maximum total points achievable within the domain. For example, as shown in Table 51, currently the total possible points for the patient/caregiver experience domain, which has seven individual measures, is 14 total possible points. Under this proposal to provide for quality improvement bonus points, the maximum possible points within this domain would continue to be 14. If an ACO scored 12 points and was awarded two additional bonus points for quality improvement then the ACO's total points for this domain would be 14. However, if instead this same ACO had scored 13 points, then this ACO's total points after adding the bonus points could still not exceed 14.

ACOs would achieve bonus points for this quality improvement measure in a domain if they achieve statistically significant levels of quality improvement for measures within the domain, as discussed below. Otherwise, the current methodology for calculating the ACO's overall quality performance score would continue to apply (see § 425.502(e) and 76 FR 67895 through 67900). Additional details about the proposal to incorporate bonus points into the quality performance scoring methodology follow:

Table 51 shows the maximum possible points that currently may be earned by an ACO in each domain and for all domains. Table 52 shows the maximum possible points that may be earned under the proposed quality measures changes. The data in Tables 51 and 52 are not affected by this proposal to provide for bonus points for quality improvement and do not include the proposed maximum of two bonus points in each domain. The quality improvement measure scoring for a domain would be based on the ACO's net improvement in quality for the other measures in the domain. The calculation of the quality improvement measure for each domain would generally be based on the formula used for the MA five star rating program, as follows:

Improvement Change Score = score for a measure in performance year minus score in previous performance year.

In general, for a measure to be eligible to be included for purposes of determining quality improvement and awarding bonus points in a domain for a performance year, the measure must be a measure for which an ACO was scored in both the performance year and the immediately preceding performance year. Measures that were not scored in both the performance year and the immediately preceding performance year, for example, new measures, would not be included in the assessment of improvement. Otherwise, for purposes of determining quality improvement and awarding bonus points, we would include all of the individual measures within the domain, including both pay-for-reporting measures and pay-for-performance measures. We believe it would be appropriate to include pay-for-reporting measures for purposes of determining quality improvement and

awarding bonus points since under § 425.500(f) ACOs that fail to report all quality measures, including pay-for-reporting measures completely, accurately, and timely may be subject to termination or other corrective action. As an example, pay for reporting applies to the CAHPS health status/functional status measure for all three performance years. However, the ACO's performance on the health status/functional status measure would still be considered in performance years two and three when we evaluate whether an ACO should be awarded bonus points.

In determining improvement, the actual performance score achieved by the ACO on the measure would be used, not the score used to determine shared savings. In other words, we calculate a performance score for each measure, regardless of whether it is pay for reporting or pay for performance, and include the score in the report we provide to the ACO. For example, all measures are pay for reporting in the first year of an ACO's first agreement period, but even though the ACO will receive full credit for all reported measures, its actual performance on those measures will also be scored and provided to the ACO for informational purposes. We believe it is appropriate to use these actual performance scores to assess improvement on a measure from year to year, regardless of whether the measure is designated as a pay for reporting or a pay for performance measure in that performance year because the performance scores achieved by the ACO provide the best indication of the actual change in quality performance by the ACO.

If the ACO is in its first performance year of its first agreement period, then it would not be possible, of course, to measure quality improvement. Therefore, for these ACOs the existing scoring methodology would continue to apply and no bonus points would be awarded. If an ACO in its second or subsequent performance year does not experience an improvement nor a decline in quality performance for any of the selected measures compared to its previous reporting period, or it experiences an improvement for some measures but has an equal or greater number of measures where quality performance has declined, then the ACO would likewise not be awarded any bonus points. If an ACO renews a participation agreement, then the measurement of quality improvement would be based on a comparison between performance in the first year of the new agreement period and performance in the 3rd year of the previous agreement period.

For each qualifying measure, we would determine whether there was a significant improvement or decline between the two performance years by applying a common standard statistical test. (See the discussion of the t-test for calculating the MA quality improvement measure in ''Medicare 2014 Part C & D Star Rating Technical Notes'', Attachment I, page 80, which can be downloaded from the CMS Web site at *http://www.cms.gov/Medicare/Prescription-Drug-Coverage/PrescriptionDrugCovGenIn/PerformanceData.html).* Statistical significance testing in this case assesses how unlikely it is that differences as big as those observed would be due to chance when the performance is actually the same. Under this methodology, we can be reasonably certain, at a 95 percent level of confidence, that statistically significant differences in an ACO's quality measure performance for a year compared to the previous year are real and not simply due to random variation in measure sampling.

The awarding of bonus points would be based on an ACO's net improvement within a domain, and would be calculated by determining the total number of significantly improved measures and subtracting the total number of significantly declined measures. Up to two bonus points would be awarded on a sliding scale based on the ACO's net improvement for the domain to the total number of individual measures in the domain. Specifically, the bonus points, up to a maximum of 2 points, would be awarded in direct proportion to the ACO's net improvement for the domain to the total number of individual measures in the domain. For example, there are seven individual measures for the patient/caregiver experience of care domain. If the ACO achieved a significant quality increase in all seven measures then the ACO would be awarded the maximum of two bonus points for this domain. However, if the ACO achieved a significant quality increase in only one of the seven measures in this domain and no significant quality decline on any of the measures then the ACO would be awarded 0.29 bonus points for quality improvement in the domain that is 1/7 times 2 = 0.29. The total points that the ACO could achieve in this domain could still not exceed the current maximum of 14 points shown in Table 51.

Tables 51 and 52 reflect the current quality measure scoring methodology which would continue under this proposal. These tables show the number of points available per domain under both the current quality performance standard and the proposed revisions to the quality performance standard.

Consistent with our current quality scoring methodology, the total points earned for measures in each domain, including any quality improvement bonus points up to the total possible points, would be summed and divided by the total points available for that domain to produce an overall domain score of the percentage of points earned versus points available. The percentage score for each domain will be averaged together to generate a final overall quality performance score and sharing rate for each ACO that will be used to determine the amount of savings it shares or, if applicable, the amount of losses it owes, consistent with the requirements under § 425.502(e).

In developing this proposal to award bonus points for quality improvement, we considered several alternative options. Specifically, we considered whether it would be more appropriate not to award bonus points but instead to include a computed quality improvement measure that would be incorporated into the current scoring methodology just as any other measure would be added. Under this alternative approach, we would increase the total possible points that could be awarded in a domain. However, we did not propose that approach because we believe that awarding bonus points would provide the desired incentive, would be more understandable and less disruptive, and would not require extensive changes to the quality performance standard. By awarding bonus points we also avoid the need to develop ways to avoid unfairly penalizing new ACOs. Similarly, ACOs that have already achieved a very high level of quality for an individual measure may not be able to achieve further statistically significant improvement for the measure. Such ACOs could otherwise be disadvantaged if they were not able to earn performance points for a new quality improvement measure added to the total measures in the domain. We believe our quality improvement proposal mitigates these concerns because the measure recognizes incremental improvement at higher levels of performance and does not impose any penalty on ACOs that have already achieved a high level of performance.

We also considered whether we should provide an even greater additional incentive by increasing the total possible bonus points, perhaps up to 4 points to provide a higher incentive for greater levels of quality

improvement. However, we are not proposing that option because we are concerned that awarding 4 points for the quality improvement measure could overweight the additional incentive for quality improvement given that the program already rewards higher performance with a greater share of any savings.

In addition, we have some concerns about whether it would be appropriate to use the ''pay for reporting'' data reported to us, given that the accuracy does not affect an ACO's quality performance score in the first performance year. Therefore, we considered whether the proposed quality improvement score should apply only to those ACOs that have completed at least two performance years. Under this alternative approach, ACOs would have an opportunity to be assessed based on their actual quality measure performance before being assessed on their quality improvement scores. We did not select this approach because we wanted to provide an incentive that would apply as soon as possible in the agreement period. Furthermore, as noted earlier, we believe it would be appropriate to include pay-for-reporting measures for purposes of awarding bonus points since under § 425.500(f) ACOs are required to report pay-for-reporting measures completely, accurately, and timely.

We are proposing to add a new paragraph (e)(4) to § 425.502 to incorporate this proposed process for calculating bonus points for quality improvement into the quality performance scoring methodology. We seek comments on this proposal and welcome comments on the alternative approaches discussed above. We also seek comments on whether there are other alternative approaches to explicitly rewarding quality improvement for ACOs, and whether the implicit reward for quality improvement provided under the current regulations is sufficient.

We also welcome any suggestions on how the Shared Savings Program might integrate elements of other quality improvement methodologies such as those employed by HVBP or MA. Such comments would be considered in developing possible future proposals to further align with other Medicare quality improvement programs.

5. Technical Corrections

Currently § 425.502(d)(2)(ii) states that ACOs must score above the minimum attainment level determined by CMS on 70 percent of the measures in each domain. If an ACO fails to achieve the minimum attainment level on at least 70 percent of the measures in a domain, CMS will take the actions described in § 425.216(c). We note that § 425.216, which addresses the actions we may take prior to termination of an ACO from the Shared Savings Program does not include a paragraph (c). To encompass all of the actions we may take prior to termination, we believe the correct reference should be to § 425.216 generally, and therefore, propose to make a technical correction to § 425.502(d)(2)(ii) to eliminate the specific reference to paragraph (c) of § 425.216. We also propose to correct a typographical error in this provision by revising ''actions describe'' to read ''actions described.''

In addition, we are also proposing to make a technical correction to § 425.502(a)(2). This provision currently states that ACOs will be assessed on performance based on the minimum attainment level for certain measures. However, as explained above and in the November 2011 Shared Savings Program final rule (76 FR 67895 through 67896), ACO performance on a measure is assessed not only based on the minimum attainment level for the measure but also based upon the quality performance benchmark that has been established for that measure. This methodology for calculating the performance score for a measure is codified in the regulations at § 425.502(c). Accordingly, we propose to amend § 425.502(a)(2) to state that ACO performance will be assessed based on the quality performance benchmark and minimum attainment level for certain measures.

We request comments on these proposed technical corrections.

N. Value-Based Payment Modifier and Physician Feedback Program

1. Overview

Section 1848(p) of the Act requires that we establish a value-based payment modifier (VM) and apply it to specific physicians and groups of physicians the Secretary determines appropriate starting January 1, 2015, and to all physicians and groups of physicians by January 1, 2017. On or after January 1, 2017, section 1848(p)(7) of the Act provides the Secretary discretion to apply the VM to eligible professionals as defined in section 1848(k)(3)(B) of the Act. Section 1848(p)(4)(C) of the Act requires the VM to be budget neutral.

In this rule, we are proposing policies to apply the VM to all physicians and groups of physicians and also nonphysician eligible professionals and to increase the amount of payment at risk. We also are proposing to refine the methodologies used to determine our quality and cost composites and also to establish a corrections process for 2015.

2. Governing Principles for VM Implementation

In the CY 2013 PFS final rule with comment period, we discussed the goals of the VM and also established that specific principles should govern the implementation of the VM (77 FR 69307). We refer readers to that rule for a detailed discussion and list those principles here for reference.

- *A focus on measurement and alignment.* Measures for the VM should consistently reflect differences in performance among groups or solo practitioners, reflect the diversity of services furnished, and be consistent with the National Quality Strategy and other CMS quality initiatives, including the PQRS, the Shared Savings Program, and the Medicare EHR Incentive Program.
- *A focus on physician and eligible professional choice.* Physicians and other nonphysician eligible professionals should be able to choose the level (individual or group) at which their quality performance will be assessed, reflecting eligible professionals' choice over their practice configurations. The choice of level should align with the requirements of other physician quality reporting programs.
- *A focus on shared accountability.* The VM can facilitate shared accountability by assessing performance at the group level and by focusing on the total costs of care, not just the costs of care furnished by an individual professional.
- *A focus on actionable information.* The Quality and Resource Use Reports (QRURs) should provide meaningful and actionable information to help groups and solo practitioners identify clinical areas where they are doing well, as well as areas in which performance could be improved by providing groups and solo practitioners with QRURs on the quality and cost of care they furnish to their patients.
- *A focus on a gradual implementation.* The VM should focus initially on identifying high and low performing groups and solo practitioners. As we gain more experience with physician measurement tools and methodologies, we can broaden the scope of measures assessed, refine physician peer groups, create finer payment distinctions, and provide greater payment incentives for high performance.

3. Overview of Existing Policies for the Physician VM

In the CY 2013 PFS final rule with comment period (77 FR 69310), we finalized policies to phase-in the VM by applying it starting January 1, 2015, to payments under the Medicare PFS for physicians in groups of 100 or more eligible professionals. A summary of the existing policies that we finalized for the CY 2015 VM can be found in the CY 2013 PFS proposed rule (77 FR 44991 through 45021). Similarly, in the CY 2014 PFS final rule with comment period, we finalized policies to phase-in the VM by applying it starting January 1, 2016 to payments under the Medicare PFS for physicians in groups of 10 or more eligible professionals. The policies that we finalized for the CY 2016 VM can be found in the CY 2014 final rule with comment period (78 FR 74765 through 74787).

4. Provisions of This Proposed Rule

We are making the following proposals regarding the VM policies:

- To apply the VM to all physicians and nonphysician eligible professionals in groups with 2 or more eligible professionals and to solo practitioners starting in CY 2017.
- To make quality–tiering mandatory for groups and solo practitioners within Category 1 for the CY 2017 VM. Category 1 includes: (1) Groups that meet the criteria for satisfactory reporting of data on PQRS quality measures via the group practice reporting option (GPRO) for the CY 2017 PQRS payment adjustment; (2) groups that do not register to participate in the PQRS as a group practice participating in the PQRS GPRO in CY 2015 and that have at least 50 percent of the group's eligible professionals meet the criteria for satisfactory reporting of data on PQRS quality measures as individuals for the CY 2017 PQRS payment adjustment, or in lieu of satisfactory reporting, satisfactorily participate in a PQRS-qualified clinical data registry for the CY 2017 PQRS payment adjustment; and (3) solo practitioners that meet the criteria for satisfactory reporting of data on PQRS quality measures as individuals for the CY 2017 PQRS payment adjustment, or in lieu of satisfactory reporting, satisfactorily participate in a PQRS-qualified clinical data registry for the CY 2017 PQRS payment adjustment. However, groups with between 2 and 9 eligible professionals and solo practitioners would be subject only to any upward or neutral adjustment determined under the quality-tiering methodology, and groups with 10 or more eligible professionals would be subject to upward, neutral, or downward adjustments determined under the quality-tiering methodology.
- To apply the VM to physicians and nonphysician eligible professionals participating in the Shared Savings Program, the Pioneer ACO Model, the CPC Initiative, or other similar Innovation Center models or CMS initiatives starting in CY 2017.
- To clarify the exclusion of non-assigned claims for non-participating providers from the VM.
- To increase the amount of payment at risk under the VM from 2.0 percent in CY 2016 to 4.0 percent in CY 2017.
- To align the quality measures and quality reporting mechanisms for the VM with those available to groups and individuals under the PQRS during the CY 2015 performance period.
- To expand the current informal inquiry process to allow additional corrections for the CY 2015 payment adjustment period.
- To address the concerns raised by NQF regarding the per capita cost measures in the cost composite.

We also seek comment on, but make no proposals regarding the treatment of hospital-based physicians with regard to the VM.

a. Group Size

Section 1848(p)(4)(B)(iii) of the Act requires the Secretary to apply the VM to items and services furnished under the PFS beginning on January 1, 2015, for specific physicians and groups of physicians the Secretary determines appropriate, and beginning not later than January 1, 2017, for all physicians and groups of physicians.

In the CY 2013 PFS final rule with comment period, we stated that we would gradually phase in the VM in CY 2015 by first applying it to large groups (77 FR 69308), which we defined as groups of physicians with 100 or more eligible professionals. In the CY 2014 PFS final rule with comment period, we continued our phase-in of the VM and adopted a policy to apply the VM in CY 2016 to groups of physicians with 10 or more eligible professionals (78 FR 74765–74767).

As mentioned above, section 1848(p)(4)(B)(iii)(II) of the Act requires the Secretary to apply the VM to items and services furnished under the PFS beginning not later than January 1, 2017, for all physicians and groups of physicians. Therefore, we propose to apply the VM in CY 2017 and each subsequent calendar year payment adjustment period to physicians in groups of physicians with 2 or more eligible professionals and to physicians who are solo practitioners. For purposes of the VM, we defined a physician, a group of physicians, and an eligible professional in the CY 2013 PFS final rule with comment period (77 FR 69307–69310). We propose to define a ''solo practitioner'' at § 414.1205 as a single Tax Identification Number (TIN) with 1 eligible professional who is identified by an individual National Provider Identifier (NPI) billing under the TIN. This proposal completes our phase in of the VM as required by the Act. Please note that in section III.N.4.b of this proposed rule, we discuss our proposal to also apply the VM to nonphysician eligible professionals in groups subject to the VM and to nonphysician eligible professionals who are solo practitioners in CY 2017 and subsequent CY payment adjustment periods. Additionally, we note that in section III.N.4.g of this proposed rule, we state that performance on quality and cost measures in CY 2015 will be used to calculate the VM that is applied to items and services for which payment is made under the PFS during CY 2017.

Table 55 shows the number of groups, eligible professionals, physicians, and nonphysician eligible professionals in groups of various sizes based on an analysis of CY 2012 claims with a 90-day run-out period. We note that the number of eligible professionals includes other practitioners, such as physician assistants and nurse practitioners, in addition to physicians. We estimate that our proposals to apply the VM to all groups with 2 or more eligible professionals and to all solo practitioners in CY 2017 would affect approximately 83,500 groups and 210,000 solo practitioners (as identified by their TINs) that consist of approximately 815,000 physicians and 315,000 nonphysician eligible professionals.

TABLE 55—ELIGIBLE PROFESSIONAL/PHYSICIAN GROUP SIZE DISTRIBUTION (2012 CLAIMS)

Group size	Number of groups (TINs)*	Eligible professionals (EPs)	Number of physicians	Number of non-physician EPs	Percent of physicians	Percent of non-physician EPs
100+ EPs	1,044	303,009	223,917	79,092	27	25
50–99 EPs	1,526	103,998	71,089	32,909	9	10
25–49 EPs	3,675	125,314	85,127	40,187	10	13
20–24 EPs	1,831	39,887	27,115	12,772	3	4
10–19 EPs	8,356	112,553	76,905	35,648	9	11
2–9 EPs	67,065	235,756	166807	68,949	20	22
1 EP	209,950	209,950	164,334	45,616	20	14
Total	293,447	1,130,467	815,294	315,173	100	100

*The number of groups (TINs) does not include TINs that have one or more EPs participating in the Shared Savings Program, the Pioneer ACO Model, or the Comprehensive Primary Care Initiative.

As discussed in the CY 2014 PFS proposed rule with comment period (78 FR 43500 through 43502), we conducted statistical reliability analysis on the PQRS quality measures contained in the 2010 and 2011 group and individual Quality and Resource Use Reports (QRURs). These reports contained the PQRS quality measures used in these years, and these PQRS measures are similar to the PQRS measures that will be used in the VM starting in CY 2015. The quality measures in the group reports were statistically reliable at a high level. Moreover, at that time, the average reliability score was high for 98 percent of the individually reported PQRS measures included in the individual feedback reports; therefore, with the exceptions discussed in section III.N.4.h of this proposed rule regarding the all cause hospital readmission measure, we believe that the PQRS quality measures for groups with 2 or more eligible professionals and solo practitioners will also be reliable since they are chosen by the physicians and reflect their patients' conditions and practices' clinical priorities.

We believe that we can validly and reliably apply a VM to groups with 2 or more eligible professionals and to solo practitioners because we would be basing the quality of care composite on the PQRS measures selected, and reported on, by the groups (or the eligible professionals in the groups) and the solo practitioners. We believe that the VM should recognize the diversity of medical practices and the various measures used to assess quality of care furnished by these practices and provide flexibility on the data they report for quality measures under the PQRS. Therefore, beginning in the CY 2014 performance period for the groups of physicians subject to the CY 2016 VM, we have permitted these groups for purposes of the VM to participate in the PQRS as a group under the GPRO or to have at least 50 percent of the eligible professionals in the group participate in the PQRS as individuals (78 FR 74767 through 74768). As a result, physicians and other eligible professionals in the group are able to report data on quality measures that reflect their own clinical practice. In the latter case, as proposed in section III.N.4.c of this proposed rule, a group would be included in Category 1 (as described in section III.N.4.c of this proposed rule) if at least 50 percent of the eligible professionals in the group meet the criteria to avoid the CY 2017 PQRS payment adjustment by using any of the reporting options available to them under the PQRS in CY 2015.

We also conducted statistical reliability analyses on the cost measures contained in the 2010 and 2011 group and individual QRURs. These reports contained the same 5 per capita cost measures that will be used for the VM. The cost measures in the group reports were statistically reliable at a high level, and the average reliability score was high for all of the cost measures included in the individual feedback reports. In addition, as discussed in the CY 2014 PFS final rule with comment period (78 FR 74774–74784), we are including the Medicare Spending per Beneficiary (MSPB) measure in the cost composite of the VM and are adjusting the cost comparison approach to consider the medical specialty composition of the group of physicians. Based on an analysis of CY 2012 claims, we estimate that approximately 48 percent of all eligible professionals are in a group (as identified by a TIN) that would have the total per capita cost measure, as identified in § 414.1235(a)(1), in its cost composite score; approximately 41 percent of all eligible professionals are in a TIN that would have the MSPB measure in its cost composite score; and approximately 34 percent of all eligible professionals are in a TIN that would have both measures in its cost composite score. Therefore, we believe that we will be able to calculate a cost composite score for a significant number of groups and solo practitioners. In the CY 2014 PFS final rule with comment period, we finalized the proposal that if we are unable to attribute a sufficient number of beneficiaries to a group of physicians subject to the VM, and thus, are unable to calculate any of the cost measures with at least 20 cases, then the group's cost composite score would be classified as ''average'' under the quality-tiering methodology (78 FR 74780 through 74781). However, we note this policy was codified in § 414.1270(b)(5) as a group of physicians subject to the value-based payment modifier will receive a cost composite score that is classified as ''average'' under § 414.1275(b)(2) if such group does not have at least one cost measure with at least 20 cases. We believe the regulation text at § 414.1270(b)(5) better reflects the intent of this policy, and accordingly, we propose to clarify that the description of this policy in the preamble of the CY 2014 PFS final rule with comment period (78 FR 74780 through 74781) should be the same as the regulation text at § 414.1270(b)(5). We propose to apply the same policy to groups and solo practitioners beginning in CY 2017. That is, a group or solo practitioner would receive a cost composite score that is classified as ''average'' under the quality-tiering methodology if the group or solo practitioner does not have at least one cost measure with at least 20 cases. We propose to revise § 414.1270 accordingly.

We believe we have provided smaller groups and solo practitioners sufficient lead time to understand how the VM works and how to participate in the PQRS. In the late summer of 2014, we plan to disseminate QRURs based on CY 2013 data to all groups of physicians and physicians who are solo practitioners. These QRURs will contain performance information on the quality

and cost measures used to calculate the quality and cost composites of the VM and will show how all TINs would fare under the policies established for the VM. The QRURs will also include additional information about the TINs' performance on the MSPB measure, individually-reported PQRS measures, and the specialty-adjusted cost measures. Then, during the summer of 2015, we intend to disseminate QRURs based on CY 2014 data to all groups of physicians and physicians who are solo practitioners and the reports would show how all TINs would fare under the policies established for the VM for the CY 2016 payment adjustment period. Thus, we believe all groups and solo practitioners will have adequate data to improve performance on the quality and cost measures that will be used to calculate the VM in CY 2017. Although we are sensitive to providing groups and solo practitioners with adequate lead time to understand the impact of the beneficiary attribution method used for the VM, we believe our proposal to hold harmless groups with between 2 and 9 eligible professionals and solo practitioners from any downward payment adjustments under quality-tiering in CY 2017 would likely mitigate unintended consequences that could occur (see section III.N.4.c of this proposed rule).

Accordingly, we propose to revise the regulations at § 414.1210 to reflect that beginning in the CY 2017 payment adjustment period, the VM would be applied to physician and nonphysician eligible professionals in groups with 2 or more eligible professionals and to solo practitioners based on the performance period described at § 414.1215. As established in the CY 2014 PFS final rule with comment period (78 FR 74772) and stated in section III.N.4.g of this proposed rule, CY 2015 is the performance period for the CY 2017 VM. Since the VM policies established for the CY 2017 payment adjustment period and each subsequent calendar year payment adjustment period would apply to groups and solo practitioners, we propose to amend the regulations under subpart N to add references to solo practitioners accordingly. We seek comments on all of these proposals.

b. Application of the VM to Nonphysician EPs

Section 1848(p) of the Act requires that we establish a VM and apply it to items and services furnished under the PFS beginning on January 1, 2015, for specific physicians and groups of physicians the Secretary determines appropriate, and beginning not later than January 1, 2017, for all physicians and groups of physicians. Section 1848(p)(7) of the Act provides the Secretary discretion to apply the VM on or after January 1, 2017 to eligible professionals as defined in section 1848(k)(3)(B) of the Act. In CY 2015 and CY 2016, we apply the VM to the items and services billed under the PFS by physicians in groups (as identified by their Medicare-enrolled TIN) subject to the VM, but not to the other eligible professionals that also may bill under the TIN. We finalized in the CY 2013 PFS final rule with comment period (77 FR 69307 through 69310) that physicians, as defined in section 1861(r) of the Act, include doctors of medicine or osteopathy, doctors of dental surgery or dental medicine, doctors of podiatric medicine, doctors of optometry, and chiropractors.

In section III.N.4.a. of this proposed rule, we discussed our proposal to apply the VM in the CY 2017 payment adjustment period and each subsequent calendar year payment adjustment period to physicians in groups of physicians with 2 or more eligible professionals and to physicians who are solo practitioners as required by section 1848(p)(4)(B)(iii)(II) of the Act.

Under the discretion afforded the Secretary in section 1848(p)(7) of the Act, we propose to apply the VM beginning in the CY 2017 payment adjustment period to all of the eligible professionals in groups with 2 or more eligible professionals and to eligible professionals who are solo practitioners. That is, we propose to apply the VM beginning in CY 2017 to the items and services billed under the PFS by all of the physicians and nonphysician eligible professionals who bill under a group's TIN. We propose to apply the VM beginning in CY 2017 to groups that consist only of nonphysician eligible professionals (for example, groups with only nurse practitioners or physician assistants). We propose to modify the definition of ''group of physicians'' under § 414.1205 to also include the term ''group'' to reflect these proposals. We also propose to apply the VM beginning in CY 2017 to nonphysician eligible professionals who are solo practitioners. Additionally, we propose that physicians and nonphysician eligible professionals would be subject to the same VM policies established in earlier rulemakings and under 42 CFR part 414, subpart N. For example, nonphysician eligible professionals would be subject to the same amount of payment at risk and quality-tiering policies as physicians. We propose to modify the regulations under 42 CFR part 414, subpart N accordingly.

We finalized in the CY 2013 PFS final rule with comment period (77 FR 69307 through 69310) that, for purposes of establishing group size, we will use the definition of an eligible professional as specified in section 1848(k)(3)(B) of the Act. This section defines an eligible professional as any of the following: (1) A physician; (2) a practitioner described in section 1842(b)(18)(C) of the Act: physician assistant, nurse practitioner, clinical nurse specialist, certified registered nurse anesthetist, certified nurse-midwife, clinical social worker, clinical psychologist, registered dietician, or nutrition professional; (3) a physical or occupational therapist or a qualified speech-language pathologist; or (4) a qualified audiologist. Beginning CY 2017, under our proposal, the VM would apply to all of the eligible professionals, as specified in section 1848(k)(3)(B) of the Act, that bill under a group's TIN based on the TIN's performance during the applicable performance period. During the payment adjustment period, all of the nonphysician eligible professionals who bill under a group's TIN would be subject to the same VM that would apply to the physicians who bill under that TIN.

We stated in the CY 2013 PFS final rule with comment period (77 FR 69307) that one of the principles that govern the implementation of the VM is our focus on shared accountability and that we have a role in fostering high value care for individual patients, but also focusing on how that patient interacts with the health care system generally. We stated our belief that the VM can facilitate shared accountability by assessing performance at the group practice level and by focusing on the total costs of care, not just the costs of care furnished by an individual physician. We believe that our proposal to apply the VM to the physicians and nonphysician eligible professionals in a group will foster shared accountability among all of the eligible professionals in the group and encourage them to seek innovative ways to furnish high-quality, patient-centered, and efficient care to the Medicare FFS patients they treat.

Moreover, section 1848(p)(5) of the Act requires us to, as appropriate, apply the VM ''in a manner that promotes systems-based care.'' We stated in the CY 2013 PFS proposed rule that, in this context, systems-based care is the processes and workflows that (1) make effective use of information technologies, (2) develop effective teams, (3) coordinate care across patient conditions, services, and settings over time, and (4) incorporate performance and outcome measurements for

improvement and accountability.[10] (77 FR 44996) We believe that applying the VM to all of the eligible professionals in a group, rather than only the physicians in the group, would enhance their ability and the resources to redesign such processes and workflows to achieve these objectives and furnish high-quality and cost-effective clinical care with greater care coordination.

As mentioned above, we are also proposing to apply the VM to groups that consist only of nonphysician eligible professionals, as well as solo practitioners who are nonphysician eligible professionals beginning in CY 2017. The quality of care composite for these groups and solo practitioners would be based on the quality data submitted under the PQRS at the group or individual level in accordance with our policy. To the extent we are able to attribute beneficiaries to these groups and solo practitioners under the attribution methodology proposed in section III.N.4.j of this proposed rule to calculate cost measures, we propose to calculate the cost composite using those cost measures. If a cost composite cannot be calculated for a group or solo practitioner, then we propose to classify the group or solo practitioner's cost composite as ''average'' as specified in § 414.1270. We seek comments on all of our proposed policies for applying the VM to nonphysician eligible professionals beginning in CY 2017.

c. Approach To Setting the VM Adjustment Based on PQRS Participation

In the CY 2014 PFS final rule with comment period (78 FR 74767–74768), we adopted a policy to categorize groups of physicians subject to the VM in CY 2016 based on a group's participation in the PQRS. Specifically, we categorize groups of physicians eligible for the CY 2016 VM into two categories. Category 1 includes groups of physicians that (a) meet the criteria for satisfactory reporting of data on PQRS quality measures through the GPRO for the CY 2016 PQRS payment adjustment or (b) do not register to participate in the PQRS as a group practice in CY 2014 and that have at least 50 percent of the group's eligible professionals meet the criteria for satisfactory reporting of data on PQRS quality measures as individuals for the CY 2016 PQRS payment adjustment, or in lieu of satisfactory reporting, satisfactorily participate in a PQRS-qualified clinical data registry for the CY 2016 PQRS payment adjustment. For a group of physicians that is subject to the CY 2016 VM to be included in Category 1, the criteria for satisfactory reporting (or the criteria for satisfactory participation, if the PQRS-qualified clinical data registry reporting mechanism is selected) must be met during the CY 2014 reporting period for the PQRS CY 2016 payment adjustment. For the CY 2016 VM, Category 2 includes those groups of physicians that are subject to the CY 2016 VM and do not fall within Category 1. For those groups of physicians in Category 2, the VM for CY 2016 is −2.0 percent.

We propose to use a similar two-category approach for the CY 2017 VM based on participation in the PQRS by groups and solo practitioners. To continue to align the VM with the PQRS and accommodate the various ways in which EPs can participate in the PQRS, for purposes of the CY 2017 VM, we propose that Category 1 would include those groups that meet the criteria for satisfactory reporting of data on PQRS quality measures via the GPRO (through use of the web-interface, EHR, or registry reporting mechanism, as proposed in section III.K of this proposed rule) for the CY 2017 PQRS payment adjustment. Our proposed criteria for satisfactory reporting of data on PQRS quality measures via the GPRO for the PQRS payment adjustment for CY 2017 are described in section III.K of this proposed rule. We also propose to include in Category 1 groups that do not register to participate in the PQRS as a group practice participating in the PQRS group practice reporting option (GPRO) in CY 2015 and that have at least 50 percent of the group's eligible professionals meet the criteria for satisfactory reporting of data on PQRS quality measures as individuals (through the use of claims, EHR, or registry reporting mechanism) for the CY 2017 PQRS payment adjustment, or in lieu of satisfactory reporting, satisfactorily participate in a PQRS-qualified clinical data registry for the CY 2017 PQRS payment adjustment, all as proposed in section III.K of this proposed rule. We note that these proposals are consistent with the policies for inclusion in Category 1 as established for the CY 2016 VM (78 FR 74767 through 74768). We would maintain the 50 percent threshold for the CY 2017 VM as we expand the application of the VM to all groups and solo practitioners in CY 2017. Our proposed criteria for satisfactory reporting by individual eligible professionals for the claims, EHR, and registry reporting mechanisms and for satisfactory participation in a qualified clinical data registry for the CY 2017 PQRS payment adjustment are described in section III.K of this proposed rule. Lastly, we propose to include in Category 1 those solo practitioners that meet the criteria for satisfactory reporting of data on PQRS quality measures as individuals (through the use of claims, registry, or EHR reporting mechanism) for the CY 2017 PQRS payment adjustment, or in lieu of satisfactory reporting, satisfactorily participate in a PQRS-qualified clinical data registry for the CY 2017 PQRS payment adjustment, all as proposed in section III.K of this proposed rule. Category 2 would include those groups and solo practitioners that are subject to the CY 2017 VM and do not fall within Category 1. As discussed in section III.N.4.f of this proposed rule, for CY 2017, we are proposing to apply a −4.0 percent VM to groups with two or more eligible professionals and solo practitioners that fall in Category 2. We seek comment on these proposals.

For a group and a solo practitioner that would be subject to the CY 2017 VM to be included in Category 1, the criteria for satisfactory reporting (or the criteria for satisfactory participation, in the case of solo practitioners and the 50 percent option described above for groups) would need to be met during the reporting periods occurring in CY 2015 for the CY 2017 PQRS payment adjustment. As noted earlier, CY 2015 is the performance period for the CY 2017 payment adjustment period for the VM. In the event that the criteria that are finalized for the CY 2017 PQRS payment adjustment differ from what is proposed for the PQRS in this proposed rule, our intention is to align the criteria for inclusion in Category 1 to the extent possible with the criteria that are ultimately established for the CY 2017 PQRS payment adjustment.

In the CY 2014 PFS final rule with comment period (78 FR 74768–74770), we finalized that the quality-tiering methodology will apply to all groups in Category 1 for the VM for CY 2016, except that groups of physicians with between 10 and 99 eligible professionals would be subject only to upward or neutral adjustments derived under the quality-tiering methodology, while groups of physicians with 100 or more eligible professionals would be subject to upward, neutral, or downward adjustments derived under the quality-

[10] Johnson JK, Miller SH, Horowitz SD. Systems-based practice: Improving the safety and quality of patient care by recognizing and improving the systems in which we work. In: Henriksen K, Battles JB, Keyes MA, Grady ML, editors. Advances in Patient Safety: New Directions and Alternative Approaches, Vol 2: Culture and Redesign. AHRQ Publication No. 08–0034–2. Rockville, MD: Agency for Healthcare Research and Quality; August 2008. p. 321–330.

tiering methodology. In other words, we finalized that groups of physicians in Category 1 with between 10 and 99 eligible professionals would be held harmless from any downward adjustments derived from the quality-tiering methodology for the CY 2016 VM.

For the CY 2017 VM, we propose to continue a similar phase-in of the quality-tiering based on the number of eligible professionals in the group. We propose to apply the quality-tiering methodology to all groups and solo practitioners in Category 1 for the VM for CY 2017, except that groups with between 2 and 9 eligible professionals and solo practitioners would be subject only to upward or neutral adjustments derived under the quality-tiering methodology, while groups with 10 or more eligible professionals would be subject to upward, neutral, or downward adjustments derived under the quality-tiering methodology. In other words, we propose that solo practitioners and groups with between 2 and 9 eligible professionals in Category 1 would be held harmless from any downward adjustments derived from the quality-tiering methodology for the CY 2017 VM. Accordingly, we propose to revise § 414.1270 to reflect these proposals. We believe this proposed approach would reward groups and solo practitioners that provide high-quality/low-cost care, reduce program complexity, and would also fully engage groups and solo practitioners into the VM as we complete the phase-in of the VM in CY 2017. We seek comments on these proposals.

We believe it is appropriate to hold groups with between 2 and 9 eligible professionals and solo practitioners in Category 1 harmless from any downward adjustments under the quality-tiering methodology, which is similar to the policy we apply to groups with between 10 and 99 eligible professionals during the first year the VM applies to them (CY 2016). We note that we anticipate applying the CY 2018 VM with both upward and downward adjustments based on a performance period of CY 2016 to all groups and solo practitioners, and therefore, we would make proposals in future rulemaking accordingly.

For groups with between 10 and 99 eligible professionals, we believe it is appropriate to begin both the upward and the downward payment adjustments under the quality-tiering methodology for the CY 2017 VM. As stated in the CY 2014 PFS final rule with comment period (78 FR 74769), on September 16, 2013, we made available to all groups of 25 or more eligible professionals an annual QRUR based on 2012 data to help groups estimate their quality and cost composites. As discussed in section III.N.4.a. of this proposed rule, in the late summer of 2014, we plan to disseminate QRURs based on CY 2013 data to all groups of physicians and physicians who are solo practitioners. These QRURs will contain performance information on the quality and cost measures used to calculate the quality and cost composites of the VM and will show how all TINs would fare under the policies established for the VM for the CY 2015 payment adjustment period. Then, during the summer of 2015, we intend to disseminate QRURs based on CY 2014 data to all groups and solo practitioners, and the reports would show how all TINs would fare under the policies established for the VM for the CY 2016 payment adjustment period. The QRURs will also include additional information about the TINs' performance on the MSPB measure, individually-reported PQRS measures, and the specialty-adjusted cost measures. Thus, we believe groups with between 10 and 99 eligible professionals will have adequate data to improve performance on the quality and cost measures that will be used to calculate the VM in CY 2017. As a result, we believe it is appropriate to apply both upward and downward adjustments under the quality-tiering methodology to groups with 10 or more eligible professionals in 2017.

Based on an analysis of CY 2012 claims, we estimate that approximately 6 percent of all eligible professionals are in a Category 1 TIN that would be classified in tiers that would earn an upward adjustment, approximately 11 percent of all eligible professionals are in a Category 1 TIN that would be classified in tiers that would receive a downward adjustment, and approximately 83 percent of all eligible professionals are in a Category 1 TIN that would receive no payment adjustment in CY 2017. These results suggest that our quality-tiering methodology identifies a small number of groups and solo practitioners that are outliers—both high and low performers—in terms of whose payments would be affected by the VM, thus limiting any widespread unintended consequences.

We will continue to monitor the VM program and continue to examine the characteristics of those groups that could be subject to an upward or downward payment adjustment under our quality-tiering methodology to determine whether our policies create anomalous effects in ways that do not reflect consistent differences in performance among physicians and physician groups.

d. Application of the VM to Physicians and Nonphysician Eligible Professionals that Participate in the Shared Savings Program, the Pioneer ACO Model, the CPC Initiative, or Other Similar Innovation Center Models or CMS Initiatives

We established a policy in the CY 2013 PFS final rule with comment period (77 FR 69313) to not apply the VM in CY 2015 and CY 2016 to groups of physicians that participate in the Shared Savings Program Accountable Care Organizations (ACOs), the Pioneer ACO Model, the Comprehensive Primary Care (CPC) Initiative, or other similar Innovation Center or CMS initiatives. We stated in the CY 2014 PFS final rule with comment period (78 FR 74766) that from an operational perspective, we will apply this policy to any group of physicians that otherwise would be subject to the VM, if one or more physician(s) in the group participate(s) in one of these programs or initiatives during the relevant performance period (CY 2013 for the CY 2015 VM, and CY 2014 for the CY 2016 VM).

Although section 1848(p)(4)(B)(iii)(I) of the Act gives the Secretary discretion to apply the VM beginning on January 1, 2015 to specific physicians and groups of physicians the Secretary determines appropriate, section 1848(p)(4)(B)(iii)(II) of the Act requires application of the VM beginning not later than January 1, 2017 to all physicians and groups of physicians. Therefore, as discussed in section III.N.4.a. of this proposed rule, we are proposing to apply the VM to all physicians in groups with 2 or more eligible professionals and to solo practitioners who are physicians starting in CY 2017. In section III.N.4.b of this proposed rule, we discussed our proposal to also apply the VM starting in CY 2017 to all nonphysician eligible professionals in groups with 2 or more eligible professionals and to solo practitioners who are nonphysician eligible professionals. We describe in this section how we propose to apply the VM beginning in the CY 2017 payment adjustment period to the physicians and nonphysician eligible professionals in groups, as well as those who are solo practitioners, participating in the Shared Savings Program, Pioneer ACO Model, the CPC Initiative, or other similar Innovation Center models or CMS initiatives.

(1) Physicians and Nonphysician Eligible Professionals That Participate in ACOs Under the Shared Savings Program

Beginning with the CY 2017 payment adjustment period, we propose to apply the VM to physicians and nonphysician eligible professionals in groups with 2 or more eligible professionals and to physicians and nonphysician eligible professionals who are solo practitioners that participate in the Shared Savings Program. Groups and solo practitioners participate in the Shared Savings Program as part of an ACO as provided in section 1899 of the Act. Under the Shared Savings Program, an ACO may consist of multiple participating groups and solo practitioners (as identified by the ACO participants' TINs). As of April 1, 2014, there are 338 ACOs participating in the Shared Savings Program. This number includes 31 ACOs that consist of only one ACO participant TIN. The ACO submits quality data on behalf of all the ACO participant TINs in that ACO under the Shared Savings Program.

Beginning with the CY 2017 payment adjustment period, we propose to classify the cost composite for the VM as ''average cost'' for groups and solo practitioners (as identified by the ACO's participant TINs) that participate in the Shared Savings Program during the payment adjustment period (for example, CY 2017). We propose to apply ''average cost'' to these groups and solo practitioners regardless of whether they participated in the Shared Savings Program during the performance period (for example, in CY 2015 for the CY 2017 VM). We believe that it would not be appropriate to apply the quality-tiering methodology to calculate the cost composite for these groups and solo practitioners because of the differences in the methodology used to calculate the cost benchmarks under the Shared Savings Program and the VM. Under the Shared Savings Program, cost benchmarks are based on the actual historical Medicare fee-for-service expenditures for beneficiaries that would have been assigned to the ACO during the historical benchmark period, and are updated to reflect changes in national FFS spending; however, the cost benchmarks under the VM are based on national averages. We believe that these are significant differences in the methodology for calculating the cost benchmarks under the two programs. Consequently, we believe that any attempt to calculate the cost composite for groups and solo practitioners participating in the Shared Savings Program using the quality-tiering methodology would create two sets of standards for ACOs for their cost performance. We believe that having two sets of standards for ACOs for cost performance would be inappropriate and confusing. We seek comments on our proposals to classify the cost composite as ''average cost'' for groups and solo practitioners that participate in the Shared Savings Program during the payment adjustment period.

For groups and solo practitioners that participate in the Shared Savings Program during the performance period (for example, CY 2015), but no longer participate in the Shared Savings Program during the payment adjustment period (for example, CY 2017), we propose to apply the quality-tiering methodology to calculate the cost composite for the VM for the payment adjustment period based on the groups' and solo practitioners' performance on the cost measures, as identified under § 414.1235, during the performance period. We believe that it would be appropriate to apply the quality-tiering methodology to calculate the cost composite because these groups and solo practitioners are no longer part of the Shared Savings Program during the payment adjustment period and their cost benchmarks would be calculated only under the VM during the payment adjustment period.

Beginning with the CY 2017 payment adjustment period, we propose to calculate the quality of care composite score for the VM for groups and solo practitioners that participate in an ACO under the Shared Savings Program in accordance with the following policies:

(a) We propose to calculate the quality of care composite score based on the quality-tiering methodology using quality data submitted by the ACO, as discussed in section III.N.4.h of this proposed rule, from the performance period and apply the same score to all of the groups and solo practitioners under the ACO during the payment adjustment period. In other words, using CY 2017 as an example, we propose to calculate the quality of care composite score for the CY 2017 VM for all of the groups and solo practitioners participating in the ACO in CY 2017 based on the ACO's CY 2015 quality data. We note that in section III.N.4.h of this proposed rule, we are proposing to exclude the claims-based outcome measures identified under § 414.1230 from the calculation of the quality of care composite score for groups and solo practitioners that participate in the Shared Savings Program during the payment adjustment period.

(b) For groups and solo practitioners that participate in the ACO during the payment adjustment period (for example, CY 2017) and either did not participate in the Shared Savings Program or were part of a different ACO during the performance period (for example, CY 2015), we propose to calculate the quality of care composite score based on the quality-tiering methodology using the quality data submitted by the ACO from the performance period. For example, if a group or solo practitioner is in ACO 1 during CY 2017, and either was not in the Shared Savings Program or was part of ACO 2 during CY 2015, we would use ACO 1's quality data from CY 2015 to calculate the quality of care composite. We believe this approach is consistent with our policy not to ''track'' or ''carry'' an individual professional's performance from one TIN to another TIN (see 77 FR 69308 through 69310). In other words, if a professional changes groups from TIN A in the performance period to TIN B in the payment adjustment period, we would apply TIN B's VM to the professional's payments for items and services billed under TIN B during the payment adjustment period.

(c) If the ACO did not exist during the performance period (for example, CY 2015), then we would not have the ACO's quality data to use in the calculation of the quality of care composite score for the payment adjustment period (for example, CY 2017). Therefore, if the ACO exists during the payment adjustment period but did not exist during the performance period, we propose to classify the quality of care composite for all groups and solo practitioners that participate in the ACO during the payment adjustment period as ''average quality'' for the payment adjustment period. We propose to apply this policy to groups and solo practitioners regardless of their status during the performance period—in other words, regardless of whether they participated in the Shared Savings Program as part of a different ACO, or did not exist during the performance period (for example, a TIN forms or newly enrolls in Medicare after the end of the performance period). We believe this proposal is appropriate since we would not have the ACO's quality data from the performance period to calculate a quality of care composite for all of the groups and solo practitioners participating in the ACO during the payment adjustment period. We note that some of these groups and solo practitioners may have participated in the PQRS during the performance period; therefore, we would have quality data for those groups and solo

practitioners. If they were part of a different ACO during the performance period, then we would also have that ACO's quality data. However, we do not believe that it would be appropriate to use the groups' and solo practitioners' PQRS or other ACO quality data from the performance period to calculate a quality of care composite because the groups and solo practitioners are part of a new ACO during the payment adjustment period. We believe this approach is consistent with our policy not to ''track'' or ''carry'' an individual professional's performance from one TIN to another TIN (see 77 FR 69308 through 69310). In this case, if a TIN's status changes from the performance period to the payment adjustment period (that is, participating in ACO 2 or not participating in the Shared Savings Program in the performance period, to participating in ACO 1 in the payment adjustment period), then we would not ''track'' or ''carry'' ACO 2's quality data or the TIN's PQRS quality data to determine the quality of care composite for groups and solo practitioners that participate in ACO 1.

(d) For groups and solo practitioners that participate in the Shared Savings Program during the performance period (for example, CY 2015) but no longer participate in the Shared Savings Program during the payment adjustment period (for example, CY 2017), we propose to classify the quality of care composite as ''average quality'' for the VM for the payment adjustment period. Since these groups and solo practitioners were part of an ACO during the performance period, we would have the ACO's quality data from that period. However, we do not believe that it would be appropriate to use the ACO's quality data from the performance period to calculate a quality of care composite because the groups and solo practitioners are no longer part of the ACO during the payment adjustment period. We believe this approach is also consistent with our policy not to ''track'' or ''carry'' an individual professional's performance from one TIN to another TIN (see 77 FR 69308 through 69310). Even though we are proposing to classify the quality of care composite for these groups and solo practitioners as ''average quality,'' we seek comments on whether we should use the ACO's quality data from the performance period to calculate the quality composite for these groups and solo practitioners for the payment adjustment period.

We seek comments on all of our proposals to calculate the quality composite for groups and solo practitioners participating in the Shared Savings Program as described above. A summary of these proposals is shown in Table 56 using TIN A and ACO 1 and ACO 2 as examples.

TABLE 56—SUMMARY OF PROPOSED POLICIES FOR GROUPS AND SOLO PRACTITIONERS WITH SHARED SAVINGS PROGRAM PARTICIPATION CHANGES

Scenario	TIN's Status during the performance period (for example, CY 2015)	TIN's Status during the payment adjustment period (for example, CY 2017)	TIN's Quality composite for the payment adjustment period (for example, CY 2017)	TIN's Cost composite for the payment adjustment period (for example, CY 2017)
a. *Continued ACO participation*—TIN A participates in ACO 1 during both the performance and payment adjustment periods.	TIN A is part of ACO 1.	TIN A is part of ACO 1.	Based on ACO 1's quality data from the performance period (for example, CY 2015.	Average cost.
b. Joining an existing ACO and not from another ACO—TIN A was not part of any ACO during the performance period, but participates in ACO 1 during the payment adjustment period (ACO 1 existed in the performance period) OR Joining an existing ACO from another ACO—TIN A participated in ACO 2 during the performance period, but is part of ACO 1 during the payment adjustment period (ACO 1 existed in the performance period)	TIN A is not part of any ACO and ACO 1 exists OR TIN A is not part of ACO 2 and ACO 1 exists	TIN A is part of ACO 1.	Based on ACO 1's quality data from the performance period (for example, CY 2015.	Average cost.
c. Joining a new ACO as a new TIN—TIN A participates in ACO 1 during the payment adjustment period (ACO 1 and TIN A did not exist in the performance period) OR Joining a new ACO and not from another ACO—TIN A was not part of any ACO during the performance period, but participates in ACO 1 during the payment adjustment period (ACO 1 did not exist in the performance period) OR Joining a new ACO from another ACO—TIN A participated in ACO 2 during the performance period, but is part of ACO 1 during the payment adjustment period (ACO 1 did not exist in the performance period).	TIN A and ACO 1 did not exist OR TIN A is not part of any ACO and ACO 1 did not exist OR TIN A is part of ACO 2 and ACO 1 did not exist.	TIN A is part of ACO 1.	Average quality	Average cost.
d. Dropping out of an ACO—TIN A participated in ACO 1 during the performance period, but is not part of any ACO during the payment adjustment period.	TIN A is part of ACO 1.	TIN A is not part of any ACO.	Average quality	Based on TIN A's cost data for the performance period using the quality-tiering methodology.

We believe that our proposal to apply the VM to groups and solo practitioners that participate in ACOs under the Shared Savings Program is appropriate in light of the statutory requirement under section 1848(p)(4)(B)(iii)(II) of the Act to apply the VM to all physicians and groups of physicians beginning not later than January 1, 2017. We believe our proposals, as described above, would further encourage groups and solo practitioners that participate in ACOs under the Shared Savings Program to furnish high quality care to Medicare beneficiaries by providing them with an opportunity to earn upward payment adjustments. We propose to apply the same VM, which would be calculated based on the policies proposed above, to all groups and solo practitioners, as identified by their TINs, that participate in an ACO under the Shared Savings Program during the payment adjustment period. Consequently, the same VM would also apply to the physicians and nonphysician eligible professionals in those groups and to the physicians and nonphysician eligible professionals who are solo practitioners that participate in the ACO during the payment adjustment period.

In section III.N.4.c of this proposed rule, we discussed our proposal to hold groups with between 2 and 9 eligible professionals and solo practitioners who are in Category 1 harmless from any downward adjustments under the quality-tiering methodology for the CY 2017 payment adjustment period. We propose to also hold harmless from any downward adjustments groups with between 2 and 9 eligible professionals and solo practitioners that participate in ACOs under the Shared Savings Program during the CY 2017 payment adjustment period based on their size during the performance period. We would follow our established process for determining group size, which is described at § 414.1210(c). Therefore, to the extent that a quality of care composite can be calculated for an ACO, and the cost composite would be classified as ''average cost,'' groups with 10 or more eligible professionals participating in the Shared Savings Program would be subject to an upward, downward, or no payment adjustment in CY 2017, and groups with between 2 and 9 eligible professionals and solo practitioners would be subject to an upward or no payment adjustment in CY 2017. We also propose that groups and solo practitioners participating in ACOs under the Shared Savings Program would be eligible for the additional upward payment adjustment of +1.0x for caring for high-risk beneficiaries, as proposed in section III.N.4.f. We propose to modify § 414.1210 to reflect these proposals.

(2) Physicians and Nonphysician Eligible Professionals that Participate in the Pioneer ACO Model, the Comprehensive Primary Care (CPC) Initiative, or Other Similar Innovation Center Models or CMS Initiatives

Section 1115A of the Act authorizes the Innovation Center to test innovative payment and service delivery models to reduce Medicare, Medicaid, or Children's Health Insurance Program (CHIP) expenditures, while preserving or enhancing the quality of care furnished to beneficiaries under those programs. Therefore, all models tested by the Innovation Center would be expected to assess participating entities (for example, providers, ACOs, states) based on quality and cost performance. As noted above, we established a policy in the CY 2013 PFS final rule with comment period (77 FR 69313) to not apply the VM in CY 2015 and CY 2016 to groups of physicians that are participating in the Pioneer ACO Model, the CPC Initiative, or in other Innovation Center initiatives or other CMS programs which also involve shared savings and where participants make substantial investments to report quality measures and to furnish higher quality, more efficient and effective healthcare.

In section III.N.4.a. of this proposed rule, we discussed our proposal to apply the VM to all physicians in groups with 2 or more eligible professionals and to solo practitioners who are physicians starting in CY 2017, as required under section 1848(p)(4)(B)(iii)(II) of the Act. In section III.N.4.b, we discussed our proposal to also apply the VM starting in CY 2017 to all nonphysician eligible professionals in groups with 2 or more eligible professionals and to solo practitioners who are nonphysician eligible professionals.

The Pioneer ACO Model and the CPC Initiative are scheduled to end on December 31, 2016. Therefore, the relevant performance periods for consideration for participants in these initiatives are CY 2015 for the CY 2017 VM payment adjustment period and potentially CY 2016 for the CY 2018 VM payment adjustment period. Under the Pioneer ACO Model, an ACO may consist of practitioners from multiple participating groups and solo practitioners (as identified by their individual TIN/NPI combination). Thus, a group practice may consist of one or more eligible professionals who participate in the Pioneer ACO Model and other eligible professionals who do not participate in the Pioneer ACO Model. In the case of the CPC Initiative, a practice site may participate in the model even if one or more other practice sites that use the same TIN does not participate. Beginning with the CY 2017 payment adjustment period, we propose to apply the VM to physicians and nonphysician eligible professionals in groups with 2 or more eligible professionals and to physicians and nonphysician eligible professionals who are solo practitioners that participate in the Pioneer ACO Model or the CPC Initiative during the relevant performance period in accordance with the policies described below.

(a) For groups and solo practitioners that participate in the Pioneer ACO Model or the CPC Initiative during the performance period (for example, CY 2015) and do not participate in the Shared Savings Program or other similar Innovation Center models or CMS initiatives during the payment adjustment period (for example, CY 2017), we propose to calculate the quality of care composite score for the VM for the payment adjustment period based on the following three scenarios:

Scenario 1: If a group participates in the PQRS as a group practice under the PQRS GPRO during the performance period and meets the criteria for satisfactory reporting of data on PQRS quality measures via one of the GPRO reporting mechanisms, as proposed in section III.K of this proposed rule, for the respective PQRS payment adjustment, then we propose to use the PQRS GPRO data to calculate the group's quality of care composite for the VM for the payment adjustment period. We propose to apply the same quality of care composite to all eligible professionals that bill under the group's TIN during the payment adjustment period. We also propose that if the group registers for GPRO for the performance period and does not meet the criteria for satisfactory reporting of data on PQRS quality measures via one of the GPRO reporting mechanisms for the respective PQRS payment adjustment, then the group would fall in Category 2. As discussed in section III.N.4.f of this proposed rule, for CY 2017, we are proposing to apply a −4.0 percent VM to groups with two or more eligible professionals and solo practitioners that fall in Category 2. In this case, all eligible professionals that bill under the group's TIN during the payment adjustment period would be subject to the −4.0% VM payment adjustment. We seek comment on this proposal.

Scenario 2: In the case of a group that does not report under the PQRS GPRO during the performance period and includes one or more eligible professionals that participate in a Pioneer ACO under the Pioneer ACO Model or in the CPC Initiative during the performance period, as well as other eligible professionals that do not participate in these models, we propose that if at least 50 percent of all eligible professionals in the group satisfactorily report quality data to CMS for the performance period, then we would calculate a quality of care composite using the quality-tiering methodology and the satisfactorily reported data on the PQRS quality measures submitted by the eligible professionals in the group as individuals under PQRS. For purposes of this scenario, by ''satisfactorily report quality data to CMS,'' we mean that at least 50 percent of the group's eligible professionals meet the criteria for satisfactory reporting of data on PQRS quality measures as individuals for the PQRS payment adjustment during the performance period, or in lieu of satisfactory reporting, satisfactorily participate in a PQRS-qualified clinical data registry for the PQRS payment adjustment during the performance period, or successfully report quality data to the Pioneer ACO Model or the CPC Initiative during the performance period. The quality of care composite would be calculated using satisfactorily reported data on the PQRS quality measures submitted by the eligible professionals in the group as individuals under PQRS regardless of whether or not the eligible professionals who report the data participate in the Pioneer ACO Model or the CPC Initiative. We propose to assign the group a quality of care composite that is the higher of ''average quality'' or the group's actual classification as determined under the quality-tiering methodology. We propose to apply the same quality of care composite to all eligible professionals that bill under the group's TIN during the payment adjustment period, regardless of whether they participated in the model during the performance period.

We propose that if less than 50 percent of all eligible professionals in the group satisfactorily report quality data to CMS for the performance period, then this group would fall in Category 2. In other words, less than 50 percent of the group's eligible professionals meet the criteria for satisfactory reporting of data on PQRS quality measures as individuals for the PQRS payment adjustment during the performance period, or in lieu of satisfactory reporting, satisfactorily participate in a PQRS-qualified clinical data registry for the PQRS payment adjustment during the performance period, or successfully report quality data to the Pioneer ACO Model or the CPC Initiative during the performance period. As discussed in section III.N.4.f of this proposed rule, for CY 2017, we are proposing to apply a −4.0 percent VM to groups with two or more eligible professionals and solo practitioners that fall in Category 2. In this case, all eligible professionals that bill under the group's TIN during the payment adjustment period would be subject to the −4.0 percent VM payment adjustment, regardless of whether they participated in the model during the performance period.

We note the eligible professionals in these groups that participate in the Pioneer ACO Model or the CPC Initiative submit quality data under their respective model. However, we do not believe that we can reasonably use the quality data submitted under these models in the calculation of the quality of care composite for these groups. At this time, we are unable to operationally integrate the data from these models with the value modifier program due to systems constraints and the unique nature of reporting for participants in these models. We also do not believe that we are able to predict how the quality data submitted under these models would affect the group's quality composite. We note that because these models are at the forefront of innovation, we believe that the eligible professionals participating in these models would have higher quality performance. For example, results from the first performance year of the Pioneer ACO Model demonstrated that Pioneer ACOs performed better than published rates in fee-for-service for 15 clinical quality measures for which comparable data are available. On readmissions, 25 of 32 Pioneer ACOs generated lower risk-adjusted readmission rates for their aligned beneficiaries than the benchmark rate for all Medicare fee-for-service beneficiaries. On clinical quality measures that assess hypertension control for Medicare beneficiaries, the median rate among Pioneer ACOs with diabetes was 68 percent compared to 55 percent as measured in adult diabetic population in 10 managed care plans across 7 states from 2000 to 2001. Also, on clinical quality measures that assess low density lipoprotein (LDL) control for patients with diabetes, the median rate among Pioneer ACOs for low density lipoprotein control among beneficiaries with diabetes was 57 percent compared to 48 percent in an adult diabetic population in 10 managed care plans across 7 states from 2000 to 2001. For these reasons, we seek to ensure that these groups are at least considered to have ''average'' quality, as reflected in our proposal above.

We also considered two alternatives to our proposal above for Scenario 2. First, we considered assigning these groups a quality composite of ''average quality'' without consideration of any PQRS quality data that may be available to calculate quality measure scores and a quality composite. We did not believe it would be appropriate to make such a proposal because we believe it is important to use data on quality, to the extent practicable, to determine a group's quality composite. Consequently, we believe it is appropriate to use the data that is reported under PQRS to calculate a quality composite for these groups. We recognize that some eligible professionals in these groups may not submit quality data under PQRS and that these professionals are likely to participate in a model and submit quality data through that model. Since we believe that participants in these models tend to perform better than average with regard to quality as described above, we believe that it is possible that we would underestimate a group's quality performance if we consider PQRS data only. Accordingly, to the extent that the data reported under PQRS by individual eligible professionals in the group results in a quality composite that is one standard deviation above average (that is, ''high quality''), we believe it is likely that this composite would increase by including data (were it available) from the eligible professionals who report quality data through the model. Therefore, we believe that it would be inappropriate to reduce a quality composite from ''high quality'' to ''average quality.'' Second, we considered assigning a quality composite of ''average quality'' to groups where less than 50 percent of all eligible professionals in the group meet the criteria for satisfactory reporting of data on PQRS quality measures as individuals for the PQRS payment adjustment during the performance period, or in lieu of satisfactory reporting, satisfactorily participate in a PQRS-qualified clinical data registry for the PQRS payment adjustment during the performance period, because we would not have quality data for more than half of the group that we could use to calculate a quality composite. Similarly, if at least 50 percent of all

eligible professionals in a group satisfactorily report or participate under PQRS as individuals, we considered using their PQRS quality data to calculate a quality composite for the group and applying the quality-tiering methodology to classify the group as high, average, or low quality. We did not believe it would be appropriate to make such a proposal. We do not believe that it is appropriate to classify a group as ''low quality'' when more than half of the eligible professionals in the group successfully report quality data (whether it be under PQRS or a model), even though we do not believe at this time we can reasonably use quality data reported through a model for the VM, because we believe that participants in these models would likely increase the group's quality performance were their data included. In other words, to the extent that the data reported under PQRS by individual eligible professionals in the group results in a quality composite that is ''low quality'' (that is, one standard deviation below average), we believe that this could be in part because the quality data of higher performing eligible professionals reported through the model would not be included in the calculation of the quality composite. Therefore, we believe it would be inappropriate to classify such a group as lower than ''average quality.''

We note that it may be possible for a group to have a disproportionately large number of eligible professionals participating in the Pioneer ACO Model or the CPC Initiative. In this instance, our proposal would result in the use of the PQRS data reported by a relatively small number of eligible professionals who are not participating in the model to determine the quality of care composite that would apply to all eligible professionals in the group. We seek comment on the degree to which this situation occurs and the appropriateness of our proposal in this instance, as well as alternatives to our proposal.

Scenario 3: If a group does not report under the PQRS GPRO during the performance period, consists entirely of eligible professionals that participate in the Pioneer ACO Model or the CPC Initiative, and successfully reports quality data to CMS under the model for the performance period, then we propose to classify the group's quality of care composite as ''average quality.'' We also propose to classify as ''average quality'' the quality of care composite of solo practitioners that participate in the Pioneer ACO Model or the CPC Initiative and successfully report quality data to CMS under the model for the performance period. We propose to apply the same quality of care composite to all eligible professionals that bill under the group's TIN during the payment adjustment period. These eligible professionals submit quality data to the Pioneer ACO Model or the CPC Initiative; however, as discussed above, we do not believe that we can reasonably use the model quality data in the calculation of the quality of care composite for these groups and solo practitioners. Additionally, we propose that if the group or the solo practitioner does not successfully report quality data to CMS under the model for the performance period, then the group or solo practitioner would fall in Category 2. As discussed in section III.N.4.f of this proposed rule, for CY 2017, we are proposing to apply a −4.0 percent VM to groups with two or more eligible professionals and solo practitioners that fall in Category 2. In this case, all eligible professionals that bill under the group's TIN during the payment adjustment period would be subject to the −4.0% VM payment adjustment.

As an alternative to this proposal, we considered assigning ''average quality'' to groups and solo practitioners that do not successfully report quality data to CMS under the model for the performance period. We believe that this policy would not have been consistent with our proposal to consider groups and solo practitioners that do not satisfactorily report or participate for PQRS as Category 2 as described in section III.N.4.c of this proposed rule. We also believe that assigning ''average quality'' may inadvertently create incentives for groups and solo practitioners to not report quality data to CMS under these models.

For groups and solo practitioners that participate in the Pioneer ACO Model or the CPC Initiative during the performance period (for example, CY 2015) and do not participate in the Shared Savings Program or other similar Innovation Center models or CMS initiatives during the payment adjustment period (for example, CY 2017) (Scenarios 1 through 3 above), we propose to apply the quality-tiering methodology to calculate the cost composite for the VM for the payment adjustment period based on a group's and solo practitioner's performance on the cost measures, as identified under § 414.1235, during the performance period. We believe that it would be appropriate to apply the quality-tiering methodology to calculate the cost composite because these groups and solo practitioners are no longer part of the Pioneer ACO Model or the CPC during the payment adjustment period, and their cost benchmarks would be calculated only under the VM during the payment adjustment period.

(b) For groups and solo practitioners that participate in the Pioneer ACO Model or the CPC Initiative during the performance period (for example, CY 2015) and participate in other similar Innovation Center models or CMS initiatives during the payment adjustment period (for example, CY 2017) (but not the Shared Savings Program), we propose to calculate the quality of care composite based on the three scenarios described above to the extent we are able. We recognize that these three scenarios might not be applicable to all of the various models and initiatives that may be developed in future years. We also propose to classify the cost composite for these groups and solo practitioners for the payment adjustment period as ''average cost.'' We believe that, for groups and solo practitioners participating in other similar models or initiatives during the payment adjustment period, calculating a cost composite based on the quality-tiering methodology may create two sets of standards for evaluating their cost performance; therefore, we believe it would be appropriate to assign ''average cost'' to these groups and solo practitioners. If we believe a different approach to applying the VM would be appropriate for a new model or initiative, we intend to address it in future rulemaking.

(c) For groups and solo practitioners that participate in the Pioneer ACO Model or the CPC Initiative during the performance period (for example, CY 2015) and participate in an ACO under the Shared Savings Program during the payment adjustment period (for example, CY 2017), we propose to calculate the quality of care composite score based on the quality-tiering methodology using quality data submitted by the Shared Savings Program ACO from the performance period. For groups and solo practitioners that participate in a Shared Savings Program ACO during the payment adjustment period that did not exist during the performance period, we propose to classify the quality of care composite as ''average quality'' for the payment adjustment period because we would not have quality data from the performance period for that ACO. We also propose to classify the cost composite for the VM as ''average cost'' for groups and solo practitioners that participate in a Shared Savings Program ACO during the payment adjustment period. As we stated in section III.N.4.d.1 of this proposed rule, we believe that there are significant

differences in the methodology for calculating the cost benchmarks under the VM and the Shared Savings Program. Consequently, we believe that any attempt to calculate the cost composite for groups and solo practitioners participating in the Shared Savings Program using the quality-tiering methodology would create two sets of standards for ACOs for their cost performance, which would be inappropriate and confusing. These proposals are consistent with the proposals for participants in the Shared Savings Program described above.

(d) In section III.N.4.c of this proposed rule, we discussed our proposal to hold groups with between 2 and 9 eligible professionals and solo practitioners who are in Category 1 harmless from any downward adjustments under the quality-tiering methodology for the CY 2017 payment adjustment period. We propose to also hold harmless from any downward adjustments for CY 2017 groups with between 2 and 9 eligible professionals, where one or more eligible professionals participate in the Pioneer ACO Model or the CPC, and solo practitioners that participate in the Pioneer ACO Model or the CPC during the CY 2015 performance period based on their size during the performance period. We would follow our established process for determining group size, which is described at § 414.1210(c). We also propose that groups where one or more eligible professionals participate in the Pioneer Model or the CPC during the performance period, and solo practitioners participating in the Pioneer ACO Model or the CPC during the performance period would be eligible for the additional upward payment adjustment of +1.0x for caring for high-risk beneficiaries, as proposed in section III.N.4.f below.

(e) In addition, beginning with the CY 2017 payment adjustment period, we propose to apply the VM to physicians and nonphysician eligible professionals in groups with 2 or more eligible professionals and to physicians and nonphysician eligible professionals who are solo practitioners that participate in other similar Innovation Center models or CMS initiatives during the relevant performance period for the VM in accordance with the proposed policies described above for the Pioneer ACO Model and the CPC Initiative. We are unable to propose an exhaustive list of the models and initiatives that would fall under this category because many of them have not yet been developed. In addition, it is possible that the timeline for implementing some of these new models and initiatives may not coincide with the timeline for rulemaking for the VM. To address these issues, we propose to rely on the following general criteria to determine whether a model or initiative would fall in this ''other similar'' category and thus would be subject to the policies described above for the Pioneer ACO Model and the CPC Initiative: (1) The model or initiative evaluates the quality of care and/or requires reporting on quality measures; (2) the model or initiative evaluates the cost of care and/or requires reporting on cost measures; (3) participants in the model or initiative receive payment based at least in part on their performance on quality measures and/or cost measures; (4) potential for conflict between the methodologies used for the VM and the methodologies used for the model or initiative; or (5) other relevant factors specific to a model or initiative. We note that a model or initiative would not have to satisfy or address all of these criteria to be included in this ''other similar'' category. Rather, the criteria are intended to serve as a general framework for evaluating models and initiatives with regard to the application of the VM to groups and solo practitioners that participate. We are seeking public comment on these or other appropriate criteria for determining which models or initiatives we should classify as ''other similar'' models, for the purposes of applying the policies for the Pioneer ACO Model and the CPC Initiative described above.

As noted above, we recognize that the policies we finalize for the Pioneer ACO Model and the CPC Initiative after consideration of public comments might not be applicable to all of the various models and initiatives that could be developed in future years. If we believe a different approach to applying the VM would be appropriate for a model or initiative, we intend to address it in future rulemaking. In addition, if we were to determine that a model or initiative falls under this ''other similar'' category based on the general criteria that we finalize after consideration of public comments, we propose to provide notice to participants in the model or initiative through the methods of communication that are typically used for the model or initiative.

We propose to modify § 414.1210 to reflect all of these proposals.

A summary of these proposals is shown in Table 57 using TIN A as an example.

TABLE 57—SUMMARY OF PROPOSED POLICIES FOR GROUPS AND SOLO PRACTITIONERS WITH PIONEER ACO MODEL, CPC INITIATIVE, OR OTHER SIMILAR INNOVATION CENTER MODEL OR CMS INITIATIVE PARTICIPATION CHANGES

Scenario	TIN's status during the performance period (for example, CY 2015)	TIN's status during the payment adjustment period (for example, CY 2017)	TIN's quality composite for the payment adjustment period (for example, CY 2017)	TIN's cost composite for the payment adjustment period (for example, CY 2017)
a. Scenario 1: TIN A participates in the Pioneer ACO Model or the CPC Initiative during the performance period, but does not participate in the Shared Savings Program or other similar Innovation Center models or CMS initiatives during the payment adjustment period (some or all of the eligible professionals in TIN A participate in the Pioneer ACO Model or CPC Initiative) AND TIN A registers for PQRS GPRO for the performance period	TIN A is part of the Pioneer ACO Model or CPC Initiative.	TIN A is not part of the Shared Savings Program or other similar Innovation Center models or CMS initiatives.	If TIN A satisfactorily reports under PQRS GPRO for the performance period: Based on TIN A's PQRS GPRO data. If TIN A does not satisfactorily report under PQRS GPRO for the performance period: TIN A falls in Category 2 and a −4.0 percent VM is applied to the TIN in the payment adjustment period.	If TIN A satisfactorily reports under PQRS GPRO for the performance period: Based on TIN A's cost data for the performance period using the quality-tiering methodology.

TABLE 57—SUMMARY OF PROPOSED POLICIES FOR GROUPS AND SOLO PRACTITIONERS WITH PIONEER ACO MODEL, CPC INITIATIVE, OR OTHER SIMILAR INNOVATION CENTER MODEL OR CMS INITIATIVE PARTICIPATION CHANGES—Continued

Scenario	TIN's status during the performance period (for example, CY 2015)	TIN's status during the payment adjustment period (for example, CY 2017)	TIN's quality composite for the payment adjustment period (for example, CY 2017)	TIN's cost composite for the payment adjustment period (for example, CY 2017)
a. Scenario 2: TIN A participates in the Pioneer ACO Model or the CPC Initiative during the performance period, but does not participate in the Shared Savings Program or other similar Innovation Center models or CMS initiatives during the payment adjustment period (TIN A has one or more eligible professionals that participate in the Pioneer ACO Model or CPC Initiative and other non-participating eligible professionals) AND For the performance period: TIN A does not report under PQRS GPRO; some eligible professionals report quality data to the Pioneer ACO Model or the CPC Initiative and others report under PQRS as individuals.	TIN A is part of the Pioneer ACO Model or CPC Initiative.	TIN A is not part of the Shared Savings Program or other similar Innovation Center models or CMS initiatives.	If at least 50 percent of all eligible professionals in TIN A satisfactorily report quality data to CMS for the performance period: Higher of ''average quality'' or the actual classification under the quality-tiering methodology based on PQRS quality data submitted by the eligible professionals as individuals. If less than 50 percent of all eligible professionals in TIN A satisfactorily report quality data to CMS for the performance period: TIN A falls in Category 2 and a −4.0 percent VM is applied to the TIN in the payment adjustment period.	If at least 50 percent of all eligible professionals in TIN A satisfactorily report quality data to CMS for the performance period: Based on TIN A's cost data for the performance period using the quality-tiering methodology
a. Scenario 3: TIN A participates in the Pioneer ACO Model or the CPC Initiative during the performance period, but does not participate in the Shared Savings Program or other similar Innovation Center models or CMS initiatives during the payment adjustment period (all eligible professionals in TIN A participate in the Pioneer ACO Model or CPC Initiative) AND For the performance period: TIN A does not report under PQRS GPRO; TIN A reports quality data to the Pioneer ACO Model or the CPC Initiative.	TIN A is part of the Pioneer ACO Model or CPC Initiative.	TIN A is not part of the Shared Savings Program or other similar Innovation Center models or CMS initiatives.	If TIN A successfully reports quality data to the Pioneer ACO Model or CPC Initiative for the performance period: Average quality. If TIN A does not successfully report quality data to the Pioneer ACO Model or CPC Initiative for the performance period: TIN A falls in Category 2 and a −4.0 percent VM is applied to the TIN in the payment adjustment period.	If TIN A successfully reports quality data to the Pioneer ACO Model or CPC Initiative for the performance period: Based on TIN A's cost data for the performance period using the quality-tiering methodology.
b. TIN A participates in the Pioneer ACO Model or the CPC Initiative during the performance period and participates in other similar Innovation Center models or CMS initiatives during the payment adjustment period (but not the Shared Savings Program).	TIN A is part of the Pioneer ACO Model or CPC Initiative.	TIN A is part of other similar Innovation Center models or CMS initiatives (but not the Shared Savings Program).	Based on Scenarios 1–3	Average cost.
c. TIN A participates in the Pioneer ACO Model or the CPC Initiative during the performance period and participates in an ACO under the Shared Savings Program during the payment adjustment period.	TIN A is part of the Pioneer ACO Model or CPC Initiative.	TIN A is part of an ACO under the Shared Savings Program.	Based on the Shared Savings Program ACO's quality data for the performance period. If the ACO did not exist in the performance period: Average quality.	Average cost.

e. Clarification Regarding Treatment of Non-Assigned Claims for Non-Participating Physicians

As indicated earlier, section 1848(p) of the Act requires the Secretary to establish a payment modifier that provides for differential payment to a physician or a group of physicians under the PFS based upon the quality of care furnished compared to cost during a performance period. In the CY 2013 PFS final rule with comment period in which we established a number of key policies for the VM, we stated that we had received few comments on our proposal to apply the VM to the Medicare paid amounts for the items and services billed under the PFS so that beneficiary cost-sharing or coinsurance would not be affected (77 FR 69309). These commenters generally agreed with the proposal to apply the VM to the Medicare paid amounts for the items and services billed under the PFS at the TIN level so that beneficiary cost-sharing would not be affected. Therefore, we finalized this policy and accordingly established a definition of the VM at § 414.1205 that was consistent with the proposal and the statutory requirement to provide for differential payment to a physician or a group of physicians under the fee schedule based upon the quality of care furnished compared to cost during a performance period.

We continue to believe it is important that beneficiary cost-sharing not be affected by the VM and that the VM should be applied to the amount that Medicare pays to physicians. However, in previous rulemaking, we did not directly address whether the VM would be applied to both assigned services for which Medicare makes payment to the physician, and to non-assigned services for which Medicare makes payment to the beneficiary. Participating physicians are those who have signed an agreement in accordance with section 1842(h)(1) of the Act to accept payment on an assignment-related basis for all items and services furnished to Medicare beneficiaries. In other words, participating physicians agree to accept the Medicare approved amount as payment in full and to charge the beneficiary only the Medicare deductible and coinsurance amount. In contrast, non-participating physicians

have not signed an agreement to accept assignment for all services furnished to beneficiaries, but they can still choose to accept assignment for individual services. If they choose not to accept assignment for particular services non-participating physicians can charge the beneficiary more than the Medicare-approved amount, up to a limit called the ''limiting charge.'' The limiting charge is defined at section 1848(g)(2)(C) of the Act as 115 percent of the recognized payment amount for nonparticipating physicians. In contrast, if a non-participating physician chooses to accept assignment for a service, they receive payment from Medicare at the approved amount for non-participating physicians, which is 95 percent of the fee schedule amount. Over 99 percent of Medicare physician services are billed on an assignment related basis by both participating and non-participating physicians and other suppliers, with the remainder billed as non-assigned services by non-participating physicians and other suppliers.

For assigned claims, Medicare makes payment directly to the physician. In accordance with section 1848(p)(1) of the Act and the regulations at § 414.1205 and § 414.1210(a), the VM should be applied to assigned claims. However, for non-assigned claims, the limiting charge (the amount that the physician can bill a beneficiary for a non-assigned service) would not be affected if the VM were applied to the claim. This is so, because for non-assigned claims, application of the VM would not affect the limiting charge. Rather, Medicare makes payment for the non-assigned services directly to the beneficiary and the physician receives all payment for a non-assigned service directly from the beneficiary. If the VM were to be applied to non-assigned services, then the Medicare payment to a beneficiary would be increased when the VM is positive and decreased when the VM is negative. The application of the VM to non-assigned claims would therefore directly affect beneficiaries and not physicians, contrary to our intent as discussed in previous rulemaking (77 FR 69309). On that basis, we are proposing to clarify that we would apply the VM only to assigned services and not to non-assigned services starting in CY 2015. We do not expect this proposed clarification, to not apply the VM to non-assigned claims, would be likely to affect a physician's decision to participate in Medicare or to otherwise accept assignment for a particular claim. This is because the amount that a provider is entitled to receive from the beneficiary for non-assigned claims is not affected by whether or not the VM is applicable to non-assigned claims. Additionally, to the extent our proposal to expand application of the VM to nonphysician eligible professionals is finalized, we would likewise apply the VM only to services billed on an assignment-related basis and not to non-assigned services. We invite comments on this proposed clarification.

f. Payment Adjustment Amount

Section 1848(p) of the Act does not specify the amount of payment that should be subject to the adjustment for the VM; however, section 1848(p)(4)(C) of the Act requires the VM be implemented in a budget neutral manner. Budget neutrality means that payments will increase for some groups and solo practitioners based on high performance and decrease for others based on low performance, but the aggregate expected amount of Medicare spending in any given year for physician and nonphysician eligible professional services paid under the Medicare PFS will not change as a result of application of the VM.

In the CY 2014 PFS final rule with comment period (78 FR 74770–74771), we adopted a policy to apply a maximum downward adjustment of 2.0 percent for the CY 2016 VM for those groups of physicians with 10 or more eligible professionals that are in Category 2 and for groups of physicians with 100 or more eligible professionals that are in Category 1 and are classified as low quality/high cost groups.

Although we received comments suggesting that larger payment adjustments (both upward and downward) would be necessary to more strongly encourage quality improvements, we finalized our proposed adjustments as we believed they better aligned with our goal to gradually phase in the VM. However, we noted that as we gained experience with our VM methodologies, we would likely consider ways to increase the amount of payment at risk (77 FR 69324).

We received comments on the CY 2014 proposed rule suggesting that the payment adjustment under the VM must be of significant weight to drive physician behavior toward achieving high quality and low cost care and that the VM should represent a larger percentage of physician payments under the PFS that should be increased incrementally from 2.0 percent and subject to annual review. In our response to these comments, we agreed that the amount of payment at risk should be higher to incentivize physicians to provide high quality and low cost care. We also stated that our experience under PQRS has shown us that a 1.0 or 2.0 percent incentive payment has not produced widespread participation in the PQRS. Thus, we believed that we needed to increase the amount of payment at risk for the CY 2016 VM to incentivize physicians and groups of physicians to report PQRS data, which will be used to calculate the VM. We continue to believe this is the appropriate strategy.

We believe that we can increase the amount of payment at risk because we can reliably apply a VM to groups with 2 or more eligible professionals and to solo practitioners in CY 2017 as discussed in section III.N.4.a. of this proposed rule. Therefore, we propose to increase the downward adjustment under the VM by doubling the amount of payment at risk from 2.0 percent in CY 2016 to 4.0 percent in CY 2017. That is, for CY 2017, we propose to apply a -4.0 percent VM to groups with two or more eligible professionals and solo practitioners that fall in Category 2. In addition, we propose to increase the maximum downward adjustment under the quality-tiering methodology in CY 2017 to −4.0 percent for groups and solo practitioners classified as low quality/high cost and to set the adjustment to −2.0 percent for groups and solo practitioners classified as either low quality/average cost or average quality/high cost. However, as discussed in section III.N.4.c of this proposed rule, we are proposing to hold solo practitioners and groups with between 2 and 9 eligible professionals that are in Category 1 harmless from any downward adjustments under the quality-tiering methodology in CY 2017. Consistent with our previous policy, we note that the estimated funds derived from the application of the downward adjustments to groups and solo practitioners in Category 1 and Category 2 would be available to all groups and solo practitioners eligible for VM upward payment adjustments. Based on an estimate of these funds, we also propose to increase the maximum upward adjustment under the quality-tiering methodology in CY 2017 to +4.0× for groups and solo practitioners classified as high quality/low cost and to set the adjustment to +2.0× for groups and solo practitioners classified as either average quality/low cost or high quality/average cost. We also propose to continue to provide an additional upward payment adjustment of +1.0× to groups and solo practitioners that care for high-risk beneficiaries (as evidenced by the average HCC risk score of the

attributed beneficiary population). Lastly, we propose to revise § 414.1270 and § 414.1275(c) and (d) to reflect the proposed changes to the payment adjustments under the VM for the CY 2017 payment adjustment period. Table 58 shows the proposed quality-tiering payment adjustment amounts for CY 2017 (based on CY 2015 performance). We believe that the proposed VM amount differentiates between cost and quality tiers in a more meaningful way. We seek comments on all of these proposals.

TABLE 58—CY 2017 VALUE-BASED PAYMENT MODIFIER AMOUNTS

Cost/quality	Low quality	Average quality	High quality
Low Cost	+0.0%	+2.0×*	+4.0×*
Average Cost	−2.0%	+0.0%	+2.0x*
High Cost	−4.0%	−2.0%	+0.0%

* Groups and solo practitioners eligible for an additional +1.0× if reporting Physician Quality Reporting System quality measures and average beneficiary risk score is in the top 25 percent of all beneficiary risk scores.

Consistent with the policy adopted in the CY 2013 PFS final rule with comment period (77 FR 69324 through 69325), the upward payment adjustment factor (''x'' in Table 58) would be determined after the performance period has ended based on the aggregate amount of downward payment adjustments.

In section III.N.4.d of this proposed rule, we discussed our proposal to apply the VM to physicians and nonphysician eligible professionals in groups with 2 or more eligible professionals and to physicians and nonphysician eligible professionals who are solo practitioners that participate in the Shared Savings Program during the payment adjustment period beginning with the CY 2017 payment adjustment period. We will have the final list of ACOs that will participate in the Shared Savings Program during the payment adjustment period and their participant TINs during the late fall prior to the beginning of the payment adjustment period (for example, the late fall of CY 2016 prior to the CY 2017 payment adjustment period). We note that this final list may not be available until after the beginning of the payment adjustment period. Therefore, we propose to calculate preliminary payment adjustment factors (''x'' in Table 58) prior to the beginning of the payment adjustment period, and subsequently finalize the payment adjustment factors after the final ACO participation list is completed. We note that the final payment adjustment factors may be updated depending on the outcome of the informal inquiry process described later at section III.N.4.i of this proposed rule.

g. Performance Period

In the CY 2014 PFS final rule with comment period (78 FR 74771 through 74772), we adopted a policy that performance on quality and cost measures in CY 2015 will be used to calculate the VM that is applied to items and services for which payment is made under the PFS during CY 2017. Accordingly, we added a new paragraph (c) to § 414.1215 to indicate that the performance period is CY 2015 for VM adjustments made in the CY 2017 payment adjustment period.

h. Quality Measures

In the CY 2014 PFS final rule with comment period (78 FR 74773), we aligned our policies for the VM for CY 2016 with the PQRS group reporting mechanisms available to groups in CY 2014 and the PQRS reporting mechanisms available to individual eligible professionals in CY 2014, such that data that groups submit for quality reporting purposes through any of the PQRS group reporting mechanisms in CY 2014 and the data that individual eligible professionals submit through any of the individual PQRS reporting mechanisms in CY 2014 will be used for calculating the quality composite under the quality-tiering approach for the VM for CY 2016. Moreover, all of the quality measures for which groups and individual eligible professionals are eligible to report under the PQRS in CY 2014 would be used to calculate the VM for a group for CY 2016 to the extent the group or individual eligible professionals in the group submits data on such measure in accordance with our 50 percent threshold policy (78 FR 74768). We also noted that, in accordance with 42 CFR 414.1230, three additional quality measures (outcome measures) for groups subject to the VM will continue to be included in the quality measures used for the VM in CY 2016. These measures are: (1) A composite of rates of potentially preventable hospital admissions for heart failure, chronic obstructive pulmonary disease, and diabetes; (2) a composite rate of potentially preventable hospital admissions for dehydration, urinary tract infections, and bacterial pneumonia; and (3) rates of an all-cause hospital readmissions measure (77 FR 69315).

PQRS Reporting Mechanisms: We believe it is important to continue to align the VM for CY 2017 with the requirements of the PQRS, because quality reporting is a necessary component of quality improvement. We also seek not to place an undue burden on eligible professionals to report such data. Accordingly, for purposes of the VM for CY 2017, we propose to include all of the PQRS GPRO reporting mechanisms available to groups for the PQRS reporting periods in CY 2015 and all of the PQRS reporting mechanisms available to individual eligible professionals for the PQRS reporting periods in CY 2015. These reporting mechanisms are described in Tables 21 through 49 of this proposed rule.

PQRS Quality Measures: We propose to use all of the quality measures that are available to be reported under these various PQRS reporting mechanisms to calculate a group or solo practitioner's VM in CY 2017 to the extent that a group (or individual eligible professionals in the group, in the case of the ''50 percent option'') or solo practitioner submits data on these measures. These PQRS quality measures are described in Tables 21 through 49 of this proposed rule. We propose that groups with 2 or more eligible professionals would be able to elect to include the patient experience of care measures collected through the PQRS CAHPS survey for CY 2015 in their VM for CY 2017. We propose to continue to include the three outcome measures in § 414.1230 in the quality measures used for the VM in CY 2017. For groups that are assessed under the ''50 percent option'' for the CY 2017 VM, we propose to calculate the group's performance rate for each measure reported by at least one eligible professional in the group by combining the weighted average of the performance rates of those eligible professionals

reporting the measure. We also propose for groups that are assessed under the ''50 percent option'' for the CY 2017 VM to classify a group's quality composite score as ''average'' under the quality-tiering methodology, if all of the eligible professionals in the group satisfactorily participate in a PQRS qualified clinical data registry in CY 2015 and we are unable to receive quality performance data for those eligible professionals. If some EPs in the group report data using a qualified clinical data registry and we are unable to obtain the data, but other EPs in the group report data using the other PQRS reporting mechanisms for individuals, we would calculate the group's score based on the reported performance data that we obtain through those other mechanisms.

While we finalized policies in the CY 2014 final rule with comment period that would allow groups assessed under the ''50 percent option'' to have data reported through a PQRS qualified clinical data registry in CY 2014 used for the purposes of their CY 2016 VM to the extent performance data are available, we note that we did not directly address the issue of how we would compute the national benchmarks for these measures. Under § 414.1250, benchmarks for the quality of care measures for the VM are the national mean of a measure's performance rate during the year prior to the performance period. In the CY 2013 PFS final rule with comment period (77 FR 69322), we finalized a policy that if a measure is new to the PQRS, we will be unable to calculate a benchmark, and hence, performance on that measure will not be included in the quality composite. Therefore, we propose to apply that policy to measures reported through a PQRS qualified clinical data registry that are new to PQRS (in other words, measures that were not previously reported in PQRS). Performance on these measures would not be included in the quality composite for the VM because we would not be able to calculate benchmarks for them. This proposal would apply beginning with the measures reported through a PQRS qualified clinical data registry in the CY 2014 performance period for the CY 2016 payment adjustment period. We welcome public comment on this proposal.

In addition, we note that the PQRS administrative claims option, which included the outcome measures described in § 414.1230, is no longer available through PQRS. We propose to clarify that we calculate benchmarks for those outcome measures described in § 414.1230 using the national mean for a measure's performance rate during the year prior to the performance period in accordance with our regulation at § 414.1250(b). We welcome public comment on this proposal.

Quality Measures for the Shared Savings Program: Starting with the CY 2017 payment adjustment period, as described in section III.M. of this proposed rule, we are proposing to apply the value modifier to groups and solo practitioners participating in ACOs under the Shared Savings Program. To do so, we are proposing quality measures and benchmarks for use with these groups and solo practitioners and seek public comment on these proposals. We describe these proposals more fully below.

With regard to quality measures, we note that there is substantial overlap between those used to evaluate the ACOs under the Shared Savings Program and those used in the PQRS program and for the value modifier payment adjustment. For the CY 2017 payment adjustment period and subsequent payment adjustment periods, to determine a quality composite for the VM for groups and solo practitioners that participate in an ACO under the Shared Savings Program, we propose to use the quality measures that are identical for the two programs. Specifically, for the CY 2017 payment adjustment period, we propose to use the PQRS GPRO Web Interface measures and the outcome measure described at § 414.1230(c) to determine a quality composite for groups and solo practitioners that participate in an ACO under the Shared Savings Program. Because the ACO GPRO measures and PQRS GPRO Web Interface measures will be the same in CY 2015, we propose to use the GPRO Web Interface measures reported by ACOs in determining the quality composite for groups and solo practitioners participating in ACOs under the Shared Savings Program in CY 2017. Utilizing these GPRO Web Interface measures in this regard further encourages successful quality reporting for Shared Savings Program ACOs. Additionally, we believe that the all-cause hospital readmissions measure as calculated for ACOs under the Shared Savings Program is equivalent to the all-cause hospital readmissions measure we have adopted for the VM at § 414.1230(c) and therefore propose use of that measure as calculated for ACOs in the Shared Savings Program for inclusion in the VM for the CY 2017 payment adjustment period. We note that the outcome measures described at § 414.1230(a) and § 414.1230(b) are not currently calculated for ACOs in the Shared Savings Program. These measures are: (1) A composite of rates of potentially preventable hospital admissions for heart failure, chronic obstructive pulmonary disease, and diabetes; and (2) a composite rate of potentially preventable hospital admissions for dehydration, urinary tract infections, and bacterial pneumonia. Because we have no experience with these measures in the Shared Savings Program, at this time, we do not propose to include these measures for groups and solo practitioners that participate in ACOs under that program. We propose to modify the regulations at § 412.1230 accordingly.

To determine the standardized scores for these quality measures proposed for use with those participating in ACOs under the Shared Savings Program, we propose to apply the benchmark policy for quality measures for the VM as described under § 414.1250. Under this policy, the VM benchmarks are the national mean for a measure's performance rate based on data from one year prior to the performance period. We believe these are the appropriate benchmarks to use when determining the value modifier payment adjustment because they are the same benchmarks used to determine the value modifier payment adjustment for other groups and solo practitioners. In other words, we believe that use of the VM benchmarks creates a fair comparison among groups and solo practitioners because we believe it is appropriate to evaluate those that participate in Shared Savings Program ACOs on the same basis as those that do not participate in the Shared Savings Program for the purpose of the value modifier. We believe the VM benchmarks are appropriate because they include all PQRS data available (77 FR 69322), including quality data used for the Shared Savings Program. On the other hand, while the Shared Savings Program develops benchmarks using all available Medicare fee-for-service data, we do not believe it is appropriate to use the benchmarks from the Shared Savings Program to determine standardized scores for the quality composite of the value modifier payment adjustment. We do not think this enables a fair comparison among groups and solo practitioners subject to the value modifier because the Shared Savings Program benchmarks are calculated using a different methodology, providing gradients by decile (including the median) of national performance based on data two years prior to the performance period (78 FR 74759 through 74760).

All-Cause Hospital Readmissions Measure: In addition, since finalizing the all-cause hospital readmissions measure described at § 414.1230(c) in the CY 2013 PFS final rule with comment (77 FR 69285), we have investigated the reliability of this measure. According to § 414.1265, to calculate a composite score for a quality or cost measure based on claims, a group subject to the VM must have 20 or more cases for that measure. Furthermore, according to § 414.1265(a), if a group has fewer than 20 cases for a measure in a performance period, that measure is excluded from its domain and the remaining measures in the domain are given equal weight.

Based on 2012 data, we found that the average reliability for the all-cause hospital readmissions measure was below 0.4 when we examined groups with fewer than 200 cases but exceeded 0.4 for groups with 200 or more cases. Although we do not believe there is a universal consensus concerning a minimum reliability threshold, reliability scores in the 0.4 to 0.7 range are often considered moderate, and scores greater than 0.7 are considered high. In general, we found that the groups with at least 10 eligible professionals were more likely to have 200 or more cases as compared to groups with fewer eligible professionals. Thirty percent of groups with 10 or more eligible professionals had 200 or more cases, as compared to 3 percent of groups with 1–9 eligible professionals. Nonetheless, the finding that the average reliability exceeded 0.4 for groups with 200 or more cases included all group sizes (1 or more eligible professionals).

After examining the reliability of the all-cause hospital readmissions measure data for 2012 across all group sizes and considering its impacts on the cost composite of the VM as discussed below, we propose to change the reliability policy (minimum number of cases) with respect to this measure. Specifically, beginning with the CY 2017 payment adjustment period, we propose to change the reliability policy (minimum number of cases) with respect to the all-cause hospital readmissions measure as described in § 414.1230(c) from a minimum of 20 cases to a minimum of 200 cases for this measure to be included in the quality composite for the VM. For this measure only, we propose to exclude the measure from the quality domain for a group or solo practitioner if the group or solo practitioner has fewer than 200 cases for the measure during the relevant performance period. In implementing this proposal, we note that we would only apply it to the all-cause hospital readmissions measure as it is calculated for groups or solo practitioners that are not part of a Shared Savings Program ACO. In instances where we are including Shared Savings Program data for groups or solo practitioners that are part of a Shared Savings Program ACO, we would include their all-cause hospital readmissions measure as it is calculated for the Shared Savings Program. We believe that this approach to implementing this proposal is appropriate, because the Shared Savings Program has taken into consideration the size of its groups in finalizing inclusion of this measure, and we value consistency with the Shared Savings Program's reporting requirements for its participants, to the extent it is practicable. We would continue to include the measure in the VM quality domain for groups or solo practitioners that have 200 or more cases. We propose to modify the regulations at § 414.1265 to reflect this proposal. We welcome comments on this proposal.

If we were to revise the minimum case size for the all-cause hospital readmissions measure for the quality composite of the VM, we note that poor performance on controlling readmissions would continue to have an effect on the VM for groups with between 20 and 199 cases through the cost composite of the VM. The Medicare Spending per Beneficiary (MSPB) measure, as finalized in the CY 2014 PFS final rule (78 FR 74775–74780), is a measure of all Medicare Part A and Part B payments during an episode spanning from 3 days prior to an index hospital admission through 30 days post-discharge with certain exclusions. Since all Part A and Part B spending is included in the 30 day post-discharge window, Medicare Part A payments for a readmission that are included in an MSPB episode will increase the MSPB amount relative to an MSPB episode without a readmission in the 30-day post-discharge window. Additionally, the cost of readmissions is incorporated as part of the 5 total per capita cost measures that comprise the remainder of the cost composite of the VM. The 5 total per capita cost measures are annual measures that include the costs of all Part A and Part B spending during the year, including the costs of readmissions. Therefore, readmission costs will have the effect of increasing total per capita cost spending for the groups attributed these patients' costs. As a result, poor performance on controlling readmissions already will have an adverse effect on an attributed group's cost composite of the VM, even if poor performance on the all-cause hospital readmissions measure would no longer be reflected in certain groups' or solo practitioners' quality composite of the VM due to having fewer than 200 all-cause hospital readmission cases. Even for those groups for which the all-cause hospital readmissions measure would be excluded from the quality composite calculations, groups would continue to have incentive to control readmissions, since doing so would reduce readmission costs, thereby improving performance on the payment-standardized, risk-adjusted cost measures used for the cost composite of the VM.

i. Proposed Expansion of the Informal Inquiry Process to Allow Corrections for the Value-Based Payment Modifier

Section 1848(p)(10) of the Act provides that there shall be no administrative or judicial review under section 1869 of the Act, section 1878 of the Act, or otherwise of the following:

- The establishment of the VM;
- The evaluation of the quality of care composite, including the establishment of appropriate measures of the quality of care;
- The evaluation of the cost composite, including the establishment of appropriate measures of costs;
- The dates of implementation of the VM;
- The specification of the initial performance period and any other performance period;
- The application of the VM; and
- The determination of costs.

These statutory requirements regarding limitations of review are reflected in § 414.1280. Despite the preclusion of administrative and judicial review, we previously indicated in the CY 2013 PFS final rule with comment period (77 FR 69326) that we believed an informal review mechanism is appropriate for groups of physicians to review and to identify any possible errors prior to application of the VM, and we established an informal inquiry process at § 414.1285. We stated that we intend to disseminate reports containing CY 2013 data in the fall of 2014 to groups of physicians subject to the VM in 2015 and that we will make a help desk available to address questions related to the reports.

We believe it would be appropriate to align with PQRS to consider requests for informal review of whether a group or solo practitioner successfully reported under the PQRS program and requests for reconsideration of PQRS data as described in section III.K, as well as to expand our current informal inquiry

process to accept requests from groups and solo practitioners to review and correct certain other errors related to the VM, such as errors made by CMS in assessing the eligibility of a group or solo practitioner for the value modifier based on participation in a Shared Savings Program ACO, the Pioneer ACO Model, the CPC Initiative, or other similar Innovation Center models or CMS initiatives; computing standardized scores; computing domain scores; computing composite scores; or computing outcome or cost measures. We are working to develop and operationalize the necessary infrastructure to support such a corrections process, but at this time, we do not believe we would be able to implement the process until 2016 at the earliest.

Therefore, for the CY 2015 payment adjustment period, to align with PQRS, we are proposing to expand the informal inquiry process at § 414.1285 to establish an initial corrections process that would allow for some limited corrections to be made. Specifically, under this initial corrections process, for the CY 2015 payment adjustment period, we are proposing to establish a deadline of January 31, 2015 for a group to request correction of a perceived error made by CMS in the determination of its CY 2015 VM payment adjustment. Alternatively, we seek comment on a deadline of no later than the end of February 2015 to align with the PQRS informal review process. We would then make a determination regarding the request. At this time, we do not anticipate it would be operationally feasible for us to fully evaluate errors with regard to quality measure data and accept data as described above under section III.K. for the CY 2015 payment adjustment period, and thus we propose to classify a TIN as ''average quality'' in the event we determine that we have made an error in the calculation of quality composite. We propose to recompute a TIN's cost composite in the event we determine that we have made an error in its calculation. We propose to adjust a TIN's quality tier if we make corrections to a TIN's quality and/or cost composites as a result of this initial corrections process. We note that there would be no administrative or judicial review of the determinations resulting from this expanded informal inquiry process under section 1848(p)(10) of the Act.

Starting with the CY 2016 payment adjustment period (which has a performance period of CY 2014), we are proposing to continue the expanded informal inquiry process at § 414.1285 as described above. However, in anticipation of having the necessary operational infrastructure to support the reconsideration of quality measure data, we are proposing to establish a 30-day period that would start after the release of the QRURs for the applicable performance period for a group or solo practitioner to request correction of a perceived error made by CMS in the determination of the group or solo practitioner's VM for that payment adjustment period. These QRURs will contain performance information on the quality and cost measures used to calculate the quality and cost composites of the VM and will show how all TINs would fare under the policies established for the VM for the CY 2015 payment adjustment period. Similar to our proposal for the initial corrections process in CY 2015, we would then make a determination regarding the requests received. Since we anticipate it would be operationally feasible for us to fully evaluate errors with regard to quality measure data at that point, and accept data as described above under section III.K. for the CY 2016 payment adjustment period, we propose to recompute a TIN's quality composite and/or cost composite in the event we determine that we have made an error in the calculation. We note that if the operational infrastructure is not available to allow this recomputation, we propose to continue the approach of the initial corrections process to classify a TIN as ''average quality'' in the event we determine that we have made an error in the calculation of the quality composite. We propose to adjust a TIN's quality tier if we make a correction to a TIN's quality and/or cost composites as a result of this corrections process. We note that there would be no administrative or judicial review of the determinations resulting from this expanded informal inquiry process under section 1848(p)(10) of the Act.

In future rulemaking and guidance, we plan to address how we would propose to refine and further develop this expanded informal inquiry process to allow for corrections for the value modifier. We believe it is important that the corrections process not undermine incentives for appropriate timely reporting. We welcome comment on these proposals, especially regarding the types of errors, timeline and other considerations that should be given to both the initial corrections process in the CY 2015 payment adjustment period and the corrections process we propose beginning with the CY 2016 payment adjustment period.

j. Potential Methods To Address NQF Concerns Regarding the Total Per Capita Cost Measures

In the CY 2013 PFS final rule with comment period (77 FR 69322), we established a policy to create a cost composite for each group subject to the VM that includes five payment-standardized and risk-adjusted annual per capita cost measures. To calculate each group's per capita cost measures, we first attribute beneficiaries to the group. We attribute beneficiaries using a two-step attribution methodology that is based on the assignment methodology used for the Shared Savings Program and the PQRS GPRO and that focuses on the delivery of primary care services (77 FR 69320).

In the CY 2014 PFS final rule with comment period (78 FR 74780), we finalized inclusion of the MSPB measure as proposed in the cost composite beginning with the CY 2016 VM, with a CY 2014 performance period. As we proposed, we are using the MSPB amount as the measure's performance rate rather than converting it to a ratio as is done under the Hospital Inpatient Quality Reporting (IQR) and VBP Programs. We finalized that the MSPB measure is added to the total per capita costs for all attributed beneficiaries domain and equally weighted with the total per capita cost measure in that domain. Additionally, we finalized that an MSPB episode is attributed to a single group of physicians that provides the plurality of Part B services (as measured by standardized allowed charges) during the index admission, for the purpose of calculating that group's MSPB measure rate. Finally, we finalized a minimum of 20 MSPB episodes for inclusion of the MSPB measure in a physician group's cost composite.

Additionally, in the CY 2014 PFS final rule with comment period (78 FR 74780), we finalized our proposal to use the specialty adjustment method to create the standardized score for each group's cost measures beginning with the CY 2016 VM. That is, we refined our current peer group methodology to account for specialty mix using the specialty adjustment method. We also finalized our proposal to include this policy in our cost composite methodology. Additionally, we finalized our proposal to identify the specialty for each EP based on the specialty that is listed on the largest share of the EP's Part B claims.

As discussed in the CY 2014 PFS final rule with comment period (78 FR 74781), we submitted the total per capita cost measure for National Quality

Forum (NQF) endorsement in January 2013. In the final voting in September 2013, the NQF Cost and Resource Use Committee narrowly voted against the measure by a count of 12 in support and 13 in opposition. We are proposing to address two of the major concerns that Committee raised in its review of the measure. First, we propose modifications to our two-step attribution methodology. Second, we propose to reverse the current exclusion of certain Medicare beneficiaries during the performance period. We discuss these proposals further below, and they would apply beginning with the CY 2017 payment adjustment period for the VM. The proposals would apply to all five of the total per capita cost measures under § 414.1235(a)(1) through (5). The modifications to the two-step attribution methodology also would apply to the methodology used for attributing beneficiaries for the computation of claims based quality measures under § 414.1230, except for participants in the Shared Savings Program as described later.

The attribution methodology for the 5 total per capita cost measures and claims based quality measures in the VM, as finalized in the CY 2013 PFS final rule with comment period (77 FR 66318 through 66320), includes two steps. Before applying the two steps, however, we first identify all beneficiaries who have had at least one primary care service rendered by a physician in the group. Primary care services include evaluation and management visits in office, other outpatient, skilled nursing facility, and home settings. After this ''pre-step'', we assign, under Step 1, beneficiaries to the group practice who had a plurality of primary care services (as measured by allowed charges) rendered by primary care physicians in the group, which include Family Practice, Internal Medicine, General Practice, and Geriatric Medicine. If a beneficiary is non-assigned under Step 1, we proceed to Step 2, which is to assign beneficiaries to the group practice whose affiliated non-primary care physicians, nurse practitioners (NPs), physician assistants (PAs), and clinical nurse specialists (CNSs) together provided the plurality of primary care services (as measured by allowed charges), as long as at least one primary care service was provided by a non-primary care physician in the group.

To address NQF concerns regarding the attribution methodology of the total per capita cost measure, we propose two modifications to the two-step attribution methodology as applied to the five total per capita cost measures, as well as the claims based quality measures in the VM. NQF Committee members discussed how primary care services often are provided by NPs, PAs, or CNSs, but Step 1 of the attribution methodology assigns beneficiaries to the group who had a plurality of primary care services rendered by primary care physicians in the group. After further consideration, we agree that it is appropriate to include NPs, PAs, and CNSs in Step 1 of the attribution method insofar as they provide primary care services. Consequently, we propose to move these NPs, PAs, and CNSs from Step 2 of the attribution method to Step 1. This proposed change would affect all five of the total per capita cost measures under § 414.1235(a)(1) through (5) and the claims-based quality measures under § 414.1230.

Additionally, we propose to remove the ''pre-step'' described above for the purposes of the value modifier. The ''pre-step'' was included in the Shared Savings Program assignment methodology to comply with the statutory requirement (77 FR 67851) that beneficiary assignment be based upon the utilization of primary care services furnished by a physician. However, no such limitation exists for the VM. Consequently, we propose to remove the ''pre-step'' that identifies a pool of assignable beneficiaries that have had at least one primary care service furnished by a physician in the group. Removing the ''pre-step'' would result in streamlining the attribution process and attributing beneficiaries based on a plurality of primary care services according to Step 1 and Step 2. In addition, we believe that this proposal would ensure that beneficiaries can be assigned to group practices made up of nonphysician eligible professionals because it would eliminate the criterion that a beneficiary have at least one primary care service furnished by a physician in the group practice. This proposed change (removing the ''pre-step'') would affect all five of the total per capita cost measures under § 414.1235(a)(1) through (5) and the claims-based quality measures under § 414.1230.

The two step attribution rule would remain intact after these two proposed modifications, and the method would continue to be generally consistent with the method of assignment of beneficiaries under the Shared Savings Program, as specified under § 414.1240. As discussed previously, the ''pre-step'' would be removed. We would assign, under Step 1, beneficiaries to the group who had a plurality of primary care services (as measured by allowed charges) rendered by primary care physicians, NPs, PAs, or CNSs in the group. If a beneficiary is non-assigned under Step 1, we still would proceed to Step 2, which would assign beneficiaries to the group practice whose affiliated non-primary care physicians provided the plurality of primary care services (as measured by allowed charges). We propose these modifications only for groups and solo practitioners who are not participating in the Shared Savings Program. We note that for groups and solo practitioners who participate in the Shared Savings Program, we would not remove the pre-step or change the attribution methodology for quality measures and cost measures, but would continue to rely on the methodology used by the Shared Savings Program to attribute beneficiaries to ACOs in the Shared Savings Program.

One of the reasons we originally proposed this two-step attribution process for the total per capita cost measures and claims based quality measures was that it was aligned with the attribution methodologies used by the Shared Savings Program and also the PQRS GPRO web interface (77 FR 69318 through 69320). We recognize that these programs may seek to establish changes to their methodologies, and note that for the purposes of the VM, we intend to retain the two-step beneficiary attribution methodology that was described in the CY 2013 PFS final rule with comment period (77 FR 69318 through 69320), subject to the changes proposed above. However, to address the concerns raised by NQF, we believe the proposed modification to the two-step beneficiary attribution method would more appropriately reflect the multiple ways in which primary care services are provided, which are not limited to physician groups. We welcome comments on our proposed modification to the two-step attribution methodology as applied to the five total per capita cost measures under § 414.1235(a)(1) through (5) and to the claims-based quality measures under § 414.1230 of the VM.

Second, NQF committee members raised concerns about the exclusion of certain beneficiaries in the methodology used for the total per capita cost measure. Committee members expressed concern that end-of-life costs were not being captured by the measure. We considered this argument and agree that it is important to include certain beneficiaries with these costs during the performance period. As a result, we propose to include certain part-year Medicare FFS beneficiaries. This proposed change would affect all five of

the total per capita cost measures under § 414.1235(a)(1) through (5). We believe the proposed change would provide a more complete assessment of end of life costs associated with the patients a physician group sees during the year. We seek comment on this proposal.

We propose to continue excluding other part-year beneficiaries (those who spend part of the performance period in a Medicare Advantage (Part C) plan and those enrolled in Part A only or Part B only for part of the performance period and both Part A and Part B for the remainder of the performance period). Excluding part-year Medicare Advantage enrollees would remain consistent with the Shared Savings Program and PQRS GPRO web interface reporting policy. If we were to include these part-year Medicare Advantage enrollees, we would need to determine a method to impute their costs for the portion of the performance period in which they were enrolled in FFS Medicare Parts A and B so that we could compare beneficiaries' annual per capita costs appropriately. Similarly, Medicare Part A only or Medicare Part B only enrollees who were enrolled in both Part A and Part B for only part of the performance period would also require a method to impute their costs if they were no longer excluded. Furthermore, these Part A only or Part B only beneficiaries are excluded from the Shared Savings Program and PQRS GPRO methodology.

We propose including Medicare FFS beneficiaries who are newly enrolled to Medicare during the performance period and enrolled in both Part A and Part B while in Medicare FFS. Additionally, while we believe inclusion of new enrollees is inconsistent with GPRO's methodology, it would be consistent with the Shared Savings Program's methodology. We welcome comments on the inclusion of these part-year beneficiaries. We also welcome comments on whether other part-year Medicare FFS beneficiaries (that is, those who are part-year Medicare Advantage enrollees or part-year Medicare Part A only or Part B only enrollees) should be included in the five total per capita cost measures under § 414.1235(a)(1) through (5) in the VM.

In this proposed rule, we are choosing not to address the other concerns about the total per capita cost measures that were raised by NQF. First, we are deferring addressing the issue of whether to incorporate socioeconomic status in our measures until after the NQF has finalized its guidance regarding risk adjustment for resource use measures. Second, we are not proposing to include Part D data in the total per capita cost measures at this time due to the complexity of the issue. Based on data compiled by the Medicare Payment Advisory Commission (MedPAC), we estimate that approximately 60 percent of Medicare FFS beneficiaries were enrolled in stand-alone Part D in 2013.[11] Including Part D data would incorrectly indicate higher costs for these beneficiaries compared to others without Part D coverage. Before we are able to propose inclusion of Part D data, we would need to determine an approach to address this issue. We welcome comments on suggested methods for including Part D data in the total per capita cost measures.

k. Discussion Regarding Treatment of Hospital-Based Physicians

We are considering including or allowing groups that include hospital-based physicians or solo practitioners who are hospital-based to elect the inclusion of Hospital Value-Based Purchasing (VBP) Program performance in their VM calculation in future years of the program. We would include hospital performance for the hospital or hospitals in which they practice. We would propose such a change through future notice and comment rulemaking, taking into consideration public comment and any relevant empirical evidence available at that time. We are considering this potential policy to expand the performance data included for hospital-based physicians and to better align incentives for quality improvement and cost control across CMS programs. Such a policy would also address public comments we received on the CY 2014 PFS proposed rule (78 FR 74775), suggesting that the Hospital VBP Program total performance score for the hospital in which a specialist practices should be used in the VM. Commenters made this suggestion, noting that there were limited measures that apply to certain specialties and that those specialties may exercise wide influence over the quality of care provided in a hospital. We note that a hospital's final Hospital VBP Program performance for a given performance period would not be available to a group at the time that they register for PQRS reporting. In other words, if we were to establish a voluntary policy where groups could elect to include hospital performance, they would make the election to have that performance included in their VM for a payment adjustment period based on the hospital's historic VBP Program performance which would be known to the TIN at the time of election.

To identify groups or solo practitioners that would have Hospital VBP Program performance data in their VM or allow such groups to elect its inclusion, we first have to identify who would have this option. Because the VM is applied at the TIN level, we believe that the election to include Hospital VBP Program data must also be made at the TIN level. We considered two general methods for identifying which TINs represent hospital-based physicians and should therefore have Hospital VBP Program data included or have the option to elect its inclusion. The first approach would be self-nomination, by which a group would attest that it is comprised primarily of hospital-based physicians. This approach would be consistent with public comment we received on the CY 2013 PFS proposed rule (77 FR 69312), in which commenters suggested that we should include hospital performance information on a voluntary basis and that it should be based on self-nomination. The second approach would be for CMS to specify criteria that a TIN would have to satisfy, to have Hospital VBP Program data included or have the option to elect its inclusion. The latter approach might provide a more objective method for determining whether a TIN would be eligible to elect inclusion of hospital performance information or would have it automatically included in its VM. These criteria could include specialty types or percentage of Medicare payments for services provided in the hospital setting. For example, the EHR Incentive Program has defined in 42 CFR 495.4 a hospital-based EP generally as an EP who furnishes 90 percent or more of his or her covered professional services in sites of service identified by the codes used in the HIPAA standard transaction as an inpatient hospital or emergency room setting. We could adopt a similar criterion for identifying hospital-based physicians for the purpose of electing or receiving mandatory inclusion of Hospital VBP Program data in the VM. If we were to take the approach of identifying appropriate criteria for eligibility for inclusion of hospital performance data, we would need to then determine whether the criteria

[11] Please see *http://www.medpac.gov/documents/Mar14_EntireReport.pdf* for underlying data. We estimated that there were 37.3 million Medicare FFS beneficiaries by subtracting the number of beneficiaries enrolled in Medicare Advantage (14.5 million) from the estimated total number of Medicare beneficiaries using data in table 13–1 (P. 328). We estimated that there were 22.4 million beneficiaries with a stand-alone prescription drug plan, which represented 64 percent of the 35 million beneficiaries with Medicare Part D coverage (p. 355).

would have to apply to the majority of physicians within a given TIN, or whether the TIN as a whole would have to meet the criteria in the aggregate. That is, using the example criterion above, we could either require that 90 percent of the total Medicare covered professional services provided by all physicians within a given TIN are furnished in a hospital setting or require that some proportion of the individual physicians within a TIN provide 90 percent of their individual Medicare covered services in the hospital setting. Additionally, since we are proposing to expand application of the VM to nonphysician eligible professionals, we seek comment on whether these methods should apply in identifying hospital-based nonphysician eligible professionals in addition to hospital based physicians. We welcome public comment on the appropriate methodology to identify hospital-based groups and solo practitioners for the purpose of having Hospital VBP Program data included or allowing them to elect inclusion of Hospital VBP Program performance data in the VM at the TIN level.

After determining which groups or solo practitioners would be eligible to have hospital VBP Program performance data included or to elect inclusion of hospital VBP Program performance data in the VM, we would require a methodology to determine which hospital or hospitals' performance would apply to a given TIN. We could base this determination on the plurality of services provided by a TIN. That is, the TIN would be attributed the Hospital VBP Program performance of the hospital at which its physicians (or physicians and nonphysician eligible professionals) billed the most professional services during a given performance period. Alternatively, we could attribute hospital performance to a TIN that provided some threshold of its hospital-based services at that hospital. For example, we could require that a TIN have performed at least 30 percent of its hospital-based services at a given hospital to have that hospital's performance included in the TIN's VM. In that example, a TIN could have up to three hospitals' performance included in its VM. We could weight the performance of the hospitals included, based on Medicare dollars paid to the TIN for services their physicians (or physicians and nonphysician eligible professionals) provided to beneficiaries hospitalized at a given hospital, or based on number of cases treated by physicians (or physicians and nonphysician eligible professionals) from the TIN that are discharged from a given hospital. We welcome public comment on these or other alternatives for determining which hospital or hospitals' Hospital VBP Program performance data should be included in a physician TIN's VM and how to weight the hospitals, if more than one is included.

After we have determined which hospital or hospitals' Hospital VBP Program performance data would be included in a TIN's VM, we would have to incorporate that hospital's or hospitals' Total Performance Score(s) (TPS(s)) or some subset of it into the VM. Under the Hospital VBP Program, a hospital receives a TPS, which is a weighted total of underlying quality performance scores the hospital receives on quality and efficiency measures included in the program. Further details about the Hospital VBP Program may be found on CMS' Web site at *http://www.cms.gov/Medicare/Quality-Initiatives-Patient-Assessment-Instruments/hospital-value-based-purchasing/index.html?redirect=/hospital-value-based-purchasing/.* We generally finalize the measures, domains into which the measures are grouped for scoring purposes, and scoring methodology (which includes the measure and domain weights that apply to a particular program year) for each Hospital VBP Program year in the IPPS/LTCH final rule that we issue each summer. For the FY 2017 Hospital VBP Program, the finalized domains are: Safety; Clinical Care (subdivided into Clinical Care—Outcomes and Clinical Care—Process); Efficiency and Cost Reduction; and Patient and Caregiver Centered Experience of Care/Care Coordination (78 FR 50703 through 50704). Other proposals for the FY 2017 Hospital VBP Program can generally be found in the FY 2015 IPPS/LTCH Proposed Rule (79 FR 28117 through 28134).

When determining what part of the TPS to include in the VM, we have to consider the varied performance periods of measures included in the Hospital VBP Program. The majority of measures used in the Hospital VBP Program are scored based on calendar year performance periods, and performance on measures under the program is used to adjust the base-operating DRG payment made to hospitals under the IPPS on a fiscal year basis. For these measures in which calendar year performance periods are used, hospitals generally report data two calendar years prior to the fiscal year in which their performance on those measures will affect their payment. For example, hospitals' CY 2016 performance on these measures under the program would affect their FY 2018 payments. If we were to incorporate Hospital VBP Program performance into the VM as in the example, we could incorporate the CY 2016 performance into VMs for CY 2018 physician payments.

In determining which portion of the TPS to include in the VM, we also have to consider the incentives generated by different approaches. Inclusion of the entire TPS score encourages shared accountability for and shared incentive to improve on all aspects of the quality of care provided during a hospitalization, while selecting some subset might better target factors over which physicians exert more influence. The latter approach might, for example, exclude measures such as HCAHPS survey dimensions focused on nursing interventions.

We considered three options for including Hospital VBP Program performance in the VM: (1) Include the entire TPS in the cost composite; (2) Include the Efficiency and Cost Reduction domain score in the cost composite, and include all or some subset of the other domain scores in the quality composite; and (3) Include some subset of the measures in the cost and quality composites. The first approach, inclusion of the TPS in the cost composite, was suggested during public comment on the CY 2014 PFS rule (78 FR 74775). This approach is a straightforward one and it encourages joint accountability and coordination between hospitals and physicians on all aspects of hospital quality. However, it could be construed as counting quality measures within the cost composite because, as noted above, the TPS is computed based on hospital performance on measures in a number of quality domains in addition to hospital performance on the Medicare Spending Per Beneficiary measure in the Efficiency and Cost Reduction domain. Additionally, we note that the VM is structured in such a manner that a score would need to be included as part of either the quality composite or the cost composite. Under this approach and the second one, measures with performance periods exceeding one calendar year would be captured in the VM for a given payment year. The second approach, inclusion of the Efficiency and Cost Reduction domain score in the cost composite and all or some subset the other domain scores in the quality composite remains relatively straightforward, encourages shared accountability and coordination between hospitals and physicians on all aspects of hospital quality, and enables us to avoid counting quality measures

within the VM cost composite, but it could still capture measures with performance periods exceeding a calendar year in the VM for a given year. We note that for the Hospital VBP Program, the Efficiency and Cost Reduction domain includes Medicare Spending per Beneficiary measure attributed to hospitals and that, starting with the CY 2016 payment adjustment period, the VM includes as part of its total cost domain the Medicare Spending per Beneficiary measure attributed to groups. While the third approach would be the most complex one, inclusion of some subset of the domain measures in the cost and quality composites would enable us to use only measures with performance periods aligning with the remainder of the VM measures to be included in the quality and cost composites, if we wished to do so. It would also enable us to identify measures over which we believe hospital-based physicians exert sufficient influence to be held accountable through payment adjustments. The third approach places less emphasis on hospital and physician coordination to improve all aspects of the quality of care provided during a hospitalization and it requires a judgment call regarding which measures to include. We believe that the second approach, inclusion of all TPS domains or some subset of the TPS domains in the VM, with the Efficiency and Cost Reduction domain included in the cost composite and the other domains (based on whether all of the measures in the domain have the same performance periods as the performance period being considered in the VM) included in the quality composite would strike the best balance between a straightforward approach, appropriate capture of different aspects of the TPS as they relate to the VM composites, and encouraging physician and hospital coordination to improve all aspects of care provided to Medicare beneficiaries who are hospitalized. We welcome public comment on the approaches we considered, as well as alternative approaches for inclusion of all or part of the Hospital VBP Program TPS into the VM. We also welcome public comment on what criteria we should consider in selecting a subset of Hospital VBP Program measures or domains in the VM, if we were to adopt such a policy.

Once we have determined which portion of the TPS to include in the VM, if we were to move forward with including Hospital VBP performance data into the VM, we would need to determine how we would incorporate it into the quality and cost composite scores. If more than one hospital's Hospital VBP Program performance data were to be included in a given TIN's VM because a multiple hospital attribution approach were selected, as discussed above, we would first weight the hospitals' performance. That performance could be measured at the TPS level, the domain level, or the individual measure level, depending which we decide to use, also discussed above. We could treat the TPS itself, the individual domain, or the individual measure as an additional measure in the composite or composites into which we incorporate it. Under this approach, the TPS, domain, or measure score could be given a standardized score, similar to other measures within the VM. For example, a given hospital's Efficiency and Cost Reduction Domain score would be arrayed along with that of all other TINs electing inclusion and the standardized score would be calculated, according to the methodology we finalized in the CY 2013 PFS final rule with comment period (77 FR 69321). That standardized score would then be weighted into the cost composite for the value modifier. The weight could depend on the number of measures underlying the domain score or TPS, it could be weighted evenly with other composite measures if calculated at the individual measure level, or it could be assigned a weight based on relative importance of the measure, to be determined through rulemaking. We welcome public comment on this potential methodology or other approaches for including Hospital VBP Program performance into a TIN's VM.

5. Physician Feedback Program

Section 1848(n) of the Act requires us to provide confidential reports to physicians (and, as determined appropriate by the Secretary, to groups of physicians) that measure the resources involved in furnishing care to Medicare FFS beneficiaries. Section 1848(n)(1)(A)(iii) of the Act also authorizes us to include information on the quality of care furnished to Medicare FFS beneficiaries. In the fall of 2013, we provided QRURs to certain physicians and groups as discussed below, which were based on CY 2012 data. We intend to make reports based on CY 2013 data available in the fall of 2014. These reports provide physicians and groups of physicians with comparative performance data (both quality and resource use) that can be used to improve quality and coordinate care furnished to Medicare FFS beneficiaries. Additionally, in June 2013 and June 2014, we provided Supplemental QRURs to group report recipients that featured episode-based costs of care. We derived these episode-based costs using an episode grouper as required by section 1848(n)(9)(A) of the Act, as well as using methodologies proposed in the FY 2015 IPPS rule to measure episode costs under the Hospital Value Based Purchasing program (79 FR 28122 through 28124).

a. CY 2013 Quality and Resource Use Reports Based on CY 2013 Data and Disseminated in CY 2014

On September 16, 2013, we made available CY 2012 QRURs to 6,779 groups nationwide with 25 or more EPs. These reports covered approximately 400,000 physicians practicing in large medical groups. The QRURs provided groups of 100 or more EPs with quality-tiering information on 2012 data that they could use to decide whether to elect to be assessed under the quality-tiering approach that we adopted for the VM that will be applied in 2015, based on 2013 performance. Additionally, and in response to feedback we received from prior year recipients of the QRURs, the CY 2012 QRURs contained detailed beneficiary-specific data on each group's attributed beneficiaries and their hospitalizations, and the group's associated eligible professionals. Complementing the CY 2012 QRURs were three downloadable drill down tables that provide information on each beneficiary attributed to the group and each eligible professional billing under the group's TIN. We have received very positive feedback from report recipients and expect to enhance the information we provide in future years.

In the late summer of 2014, we plan to disseminate the QRURs based on CY 2013 data to all physicians (that is, TINs of any size) even though groups with fewer than 100 eligible professionals will not be subject to the VM in CY 2015. Additionally, in CY 2015, the VM will not apply to any group that participated in the Shared Saving Program, the Pioneer ACO model, or the Comprehensive Primary Care Initiative during the performance period (CY 2013). These reports will contain performance on the quality and cost measures used to score the composites and additional information to help physicians coordinate care and improve the quality of care furnished.

b. Episode Costs and the Supplemental QRURs

Section 1848(n)(9)(A) of the Act requires CMS to develop an episode grouper and include episode-based costs in the QRURs. An episode of care consists of medical and/or procedural services that address a specific medical

condition or procedure that are delivered to a patient within a defined time period and are captured by claims data. An episode grouper organizes administrative claims data into episodes.

We have developed a prototype set of episodes that expands upon the set of episodes that were described in the CY 2014 PFS final rule with comment period (78 FR 74785). In June 2013, we made available to 54 large group practices Supplemental QRURs based on 2011 data that illustrated the general approach to classifying episodes of care. The 2011 Supplemental QRURs included episode-based costs for five clinical conditions (pneumonia, acute myocardial infarction (AMI), coronary artery disease, percutaneous coronary intervention (PCI), and coronary artery bypass graft (CABG)), which also were broken into 12 episode subtypes to account for various underlying clinical factors. We chose these episode types to gain experience with the prototype methodology of the episode grouper in acute, chronic, and procedural conditions. In summer 2014, we distributed Supplemental QRURs based on 2012 data to a greater number of groups (groups with at least 100 EPs [12] EPs) that included a broader set of episodes than the 2011 Supplemental QRURs. In addition to the five clinical conditions in the 2011 Supplemental QRURs, the 2012 Supplemental QRURs included: Chronic congestive heart failure (CHF); chronic obstructive pulmonary disease (COPD)/asthma; acute COPD/asthma; permanent pacemaker system replacement/insertion; and bilateral cataract removal with lens implant. For the 2012 Supplemental QRURs, we broke down these episode types into 20 subtypes altogether. In addition to these 20 episode subtypes, we included in the 2012 Supplemental QRURs 6 clinical episode-based measures that we are adapting from those considered for inclusion in the Hospital VBP program (79 FR 28122 through 28124). These 6 additional episode-based measures will be described following discussion of the 20 episode subtypes.

For the 20 episode subtypes discussed above, we applied different attribution rules, depending on episode type (for example, chronic, acute, or procedural) and whether the episode included a hospitalization. Following feedback we received from physician groups on the 2011 Supplemental QRURs, we have simplified our attribution rules to a single plurality attribution rule with a 20 percent minimum threshold. We believe that it is critical to attribute an episode to the group of physicians that is in the best position to oversee the quality of care furnished and the resources used to furnish that care. For chronic episodes, attribution was based on the plurality of outpatient E&M visits during the episode, because these conditions seem best managed in an outpatient setting. For acute inpatient-based episodes, attribution was based the plurality of inpatient E&M visits during the trigger event; for outpatient-based acute episodes, attribution was based on the plurality of E&M visits during the entire episode. For procedural episodes, attribution is made to the group that includes the performing surgeon. For chronic and acute episodes, attribution required at least 20 percent of the relevant type of E&M visits, as applicable to the episode type. Additional tie-breaking rules were applied when necessary, and further details on attribution rules can be found in ''Detailed Methods of the 2012 Medical Group Practice Supplemental Quality and Resource Use Reports (QRURs)'' at *http://www.cms.gov/Medicare/Medicare-Fee-for-Service-Payment/PhysicianFeedbackProgram/Episode-Costs-and-Medicare-Episode-Grouper.html.*

To control for patient case-mix, we applied a risk-adjustment methodology. We also used a slightly different risk adjustment methodology to adjust the costs for the underlying risk factors for the beneficiaries with these episodes as compared to the total per capita cost measures that we have used in the CY 2013 QRURs. The episode grouper used to generate the 2012 episode data for the 20 episode subtypes, as discussed above, adjusted costs for health and treatment history in the 6 months prior to the beginning of the episode. The risk-adjustment methodology calculated each episode's expected cost based on health (for example, severity), and non-health (for example, age) explanatory variables. Using these variables, the risk-adjustment model calculated the predicted cost of an episode using information available at the start of the episode. The use of such a prospective risk model avoids allowing providers to influence their risk-adjusted costs by changing their treatment patterns during the episode. We are continuing to examine ways to refine this approach as we develop further episode costs for additional clinical conditions. All cost figures used in the risk-adjustment model are payment-standardized.

We have worked with stakeholders and specialty societies to gain input for the next iteration of the Supplemental QRURs. Based on input received, we have modified episode attribution rules, and increased drill down capability. The Supplemental QRURs contained summary information about each episode type, comparisons to national benchmarks, as well as specific information describing each episode attributed to the group of physicians. We view these 2012 Supplemental QRURs as part of an extended process of incorporating episode costs into the QRURs. We intend to further develop the episode grouper and to broaden the range of conditions that are addressed by episode grouping, such as the additional clinical episode based measures we adapted from the Hospital Value-Based Purchasing Program. The feedback that CMS expects from the medical practice groups on the 2012 Supplemental QRURs will inform next steps.

In the future, we plan to further develop these episode reports and to include not only additional episodes, and to make this information available to an even greater number of medical group practices. In addition, we have begun preliminary investigation of how to marry these measures of resource use with clinical quality measures included in the PQRS, because resource use is to be considered in context of the quality of care furnished for the value modifier. We have also begun investigation of how to align episode measures across provider settings and describe this effort more below.

We note that for the 2012 Supplemental QRURs released in summer of 2014, we included six additional clinical episode-based measures that were adapted from measures proposed for future inclusion in the Hospital VBP Program. In the FY 2015 IPPS proposed rule (79 FR 28122 through 28124), we discussed six clinical episode-based condition-specific measures for hospitals that we also adapted for use in the 2012 Supplemental QRURs. In that proposed rule, we stated that these measures that we are considering for potential future inclusion in the Hospital VBP Program would create additional incentives for coordination between hospitals and physicians to optimize the care they provide to Medicare beneficiaries and would facilitate alignment between the Hospital VBP Program and the VM. Initially, these measures have been included only in the Physician

[12] For Supplemental QRUR purposes, groups were also included if they did not to participate in multiple accountable care organizations (ACOs) and did not to participate in more than one of the following initiatives in program year 2012: The Shared Savings Program, the Pioneer Accountable Care Organization (ACO) Model, or the Comprehensive Primary Care Initiative (CPCI).

Feedback Program, through the 2012 Supplemental QRURs, and we would consider whether to propose their inclusion in the VM through future rulemaking.

The episode-based measures we included in the 2012 Supplemental QRURs and are considering for future inclusion in the Hospital VBP Program are similar in many ways to the MSPB measures already included in the Efficiency domain of the Hospital VBP Program and finalized in the CY 2014 PFS final rule (78 FR 74780) for the VM. As discussed in the FY 2015 IPPS proposed rule (79 FR 28123), like the MSPB measure, these episode-based standardized payment measures would include services initiated during an episode that spans from 3 days prior to a hospital admission through 30 days post-discharge from the hospital. While the MSPB measure includes all Medicare Part A and Part B payments during this time window, the six hospital-based episodes only include Medicare payments for services that are clinically related to the health conditions treated during the hospital stay that triggered the episode. We sum the standardized Medicare payment amounts for Part A and Part B services provided during this timeframe. Medicare payments included in these episode-based measures are standardized according to the CMS standardization methodology finalized for the MSPB in the FY 2012 IPPS/LTCH PPS final rule (76 FR 51626). Episodes in the six new measures are risk-adjusted in a manner similar to the MSPB measure risk adjustment methodology finalized in the FY 2013 IPPS final rule (76 FR 51625 through 51626).[13] The payment standardization methodology is available in the document entitled ''CMS Price Standardization'' available at *http://www.qualitynet.org/dcs/ContentServer?c=Page&pagename=QnetPublic%2FPage%2FQnetTier4&cid=1228772057350.* The risk adjustment methodology specific to these six episode-based standardized payment measures can be found on the CMS Web site at *http://www.cms.gov/Medicare/Medicare-Fee-for-Service-Payment/PhysicianFeedbackProgram/Episode-Costs-and-Medicare-Episode-Grouper.html.* Risk adjustment and payment standardization allow us to compare performance on these measures in the QRURs, attributed to a physician group, across physician groups.

We included three medical and three surgical episodes in the 2012 Supplemental QRURs. The medical episode measures are for the following conditions: (1) Kidney/urinary tract infection; (2) cellulitis; and (3) gastrointestinal hemorrhage. A medical episode is 'triggered' by an inpatient claim with a specified MS–DRG. The surgical episode measures are: (1) Hip replacement; (2) knee replacement/revision; and (3) lumbar spine fusion/refusion. A surgical episode is triggered when an inpatient claim has one of the specified MS–DRGs and at least one of the procedure codes specified for that episode. We welcome public comment on the three medical and three surgical episode measures that we included in the 2012 Supplemental QRURs.

Attribution for the six clinical episode-based measures at the group level are the same as the rules used for comparable types of the 20 episode subtypes in the 2012 Supplemental QRURs as discussed above. Attribution rules varied depending on whether a the clinical episode-based measure was one of the three surgical (or procedural) episodes or one of the three medical (or acute condition) episodes. Further details on attribution rules can be found in ''Detailed Methods of the 2012 Medical Group Practice Supplemental Quality and Resource Use Reports (QRURs)'' at *http://www.cms.gov/Medicare/Medicare-Fee-for-Service-Payment/PhysicianFeedbackProgram/Episode-Costs-and-Medicare-Episode-Grouper.html.*

Specifications for these six clinical episode-based measures, including the MS–DRG and procedure codes used to identify each of the episodes, and details of episode construction methodology, are available in ''Detailed Methods of the 2012 Medical Group Practice Supplemental Quality and Resource Use Reports (QRURs)'' at *http://www.cms.gov/Medicare/Medicare-Fee-for-Service-Payment/PhysicianFeedbackProgram/Episode-Costs-and-Medicare-Episode-Grouper.html.* We welcome public comments on these specifications and the construction of the six clinical episode-based measures that we included in the 2012 Supplemental QRURs.

CMS' episodes will continue to evolve over the coming years as more experience is gained. More information about the Supplemental QRURs can be found at *http://www.cms.gov/Medicare/Medicare-Fee-for-Service-Payment/PhysicianFeedbackProgram/Episode-Costs-and-Medicare-Episode-Grouper.html.*

We will continue to seek stakeholder input as we develop the episode framework. We are considering proposing to add episode-based payment measures to the VM through future rulemaking for all 12 episode subtypes, or some subset of these episode subtypes, of the selected respiratory and selected heart conditions that have appeared in both the 2011 Supplemental QRURs and 2012 Supplemental QRURs. These 12 episode subtypes include: Pneumonia (all), pneumonia without an inpatient hospitalization, pneumonia with an inpatient hospitalization, acute myocardial infarction (now called acute coronary syndrome or ACS), ACS without percutaneous coronary interventions (PCI) or coronary artery bypass graft (CABG), ACS with PCI, ACS with CABG, coronary artery disease (now called ischemic heart disease or IHD), IHD without ACS, IHD with ACS, CABG without preceding ACS, and PCI without preceding ACS. Additionally, we are considering proposing to add hospital episode-based payment measures to the VM at a later time, such as the six hospital episodes described above. We welcome public comments on the specifications included on the Web site and the construction of the episode-based payment measures that we are considering.

c. Future Plans for the Physician Feedback Reports

We will continue to develop and refine the annual QRURs in an iterative manner. As we have done in previous years, we will seek to further improve the reports by welcoming suggestions from recipients, specialty societies, professional associations, and others. We have worked with several specialty societies to develop episode costs or other cost or utilization metrics to include in the annual QRURs. We believe these efforts could be productive as we use the QRURs to not only describe how the VM would apply, but in addition to provide groups with utilization and other statistics that can be used for quality improvement and care coordination.

In the late summer of 2014, we plan to disseminate the QRURs based on CY 2013 data to all physicians (that is, TINs of any size) even though groups with fewer than 100 eligible professionals will not be subject to the VM in CY 2015. Additionally, the VM will not

[13] There are a few difference between the risk adjustment approaches for the six clinical episode-based measures and the MSPB. MSPB episodes are risk-adjusted at the Major Diagnostic Category (MDC) level, whereas two of the new episode-based measures, the hip episode measure and the knee episode measure, represent conditions that are in the same MDC. Accordingly, the six clinical episode-based measures are individually risk-adjusted at the specific episode type level, to recognize the distinctions.

apply to any group that participated in the Shared Saving Program, the Pioneer ACO model, or the Comprehensive Primary Care Initiative during the performance period (CY 2013). These reports will contain performance on the quality and cost measures used to score the composites and additional information to help physicians coordinate care and improve the quality of care furnished. Improvements to this year's reports include: Additional supplementary information on the specialty adjusted benchmarks; inclusion of the individual PQRS measures for informational purposes for individual EPs reporting PQRS measures on their own; enhanced drill down tables; and a dashboard with key performance measures. The reports will be based on the VM policies that were finalized in the CY 2013 PFS final rule with comment period (77 FR 69310), and that will affect physician payment starting January 1, 2015. Groups will, therefore, have an opportunity to see how the policies adopted will apply to them. After the reports are released we will again solicit feedback from physicians and continue to work with our partners to improve them. We note that physicians will have some time to determine the impact of our revised policies and revise their practices accordingly before the new policies impact them. We look forward to continue working with the physician community to improve the QRURs.

IV. Collection of Information Requirements

Under the Paperwork Reduction Act of 1995, we are required to provide 60-day notice in the **Federal Register** and solicit public comment before a collection of information requirement is submitted to the Office of Management and Budget (OMB) for review and approval. To fairly evaluate whether an information collection should be approved by OMB, section 3506(c)(2)(A) of the Paperwork Reduction Act of 1995 requires that we solicit comment on the following issues:

- The need for the information collection and its usefulness in carrying out the proper functions of our agency.
- The accuracy of our estimate of the information collection burden.
- The quality, utility, and clarity of the information to be collected.
- Recommendations to minimize the information collection burden on the affected public, including automated collection techniques.

To derive average costs, we used data from the U.S. Bureau of Labor Statistics for all salary estimates. The salary estimates include the cost of fringe benefits, calculated at 35 percent of salary, which is based on the June 2012 Employer Costs for Employee Compensation report by the Bureau.

We are soliciting public comment on each of the section 3506(c)(2)(A)-required issues for the following information collection requirements (ICRs). For cohesion, the ICRs are set out below under the same headings found in sections II (Provisions of the Proposed Rule for PFS) and III (Other Provisions of the Proposed Regulations) of this preamble.

A. Information Collection Requirements (ICRs)

1. ICRs Regarding the Removal of Employment Requirements for Services Furnished Incident to Rural Health Clinics and Federally Qualified Health Center Visits

This provision would remove the requirement that nonphysician RHC or FQHC practitioners be W–2 employees. This action would not require the modification of existing contracts or the creation of new contracts, nor does CMS collect any information on contracting. Consequently, the provision is not subject to the requirements under the Paperwork Reduction Act of 1995 (44 U.S.C. 3501 et seq.).

2. ICRs Regarding Access to Identifiable Data for the Center for Medicare and Medicaid Models

While this provision concerns the evaluation of 3021-funded models, section 3021(a) of the Affordable Care Act exempts any collection of information associated with the testing and evaluation or expansion of 3021-funded models from the requirements of the Paperwork Reduction Act of 1995 (44 U.S.C. 3501 *et seq.*).

3. ICRs Regarding Molecular Diagnostic Testing Local Coverage Determination Process

The information collection requirements and burden associated with the proposed LCD process for clinical diagnostic laboratory testing would not impose any new or revised reporting, recordkeeping, or third-party disclosure requirements and, therefore, does not require additional OMB review under the authority of the Paperwork Reduction Act of 1995 (44 U.S.C. 3501 *et seq.*).

4. ICRs Regarding the Solicitation of Comments on the Payment Policy for Substitute Physician Billing Arrangements

In this section of this preamble, we are soliciting public comments regarding substitute physician billing arrangements. Since we are not proposing any new or revised collection of information requirements, this section is not subject to the requirements under the Paperwork Reduction Act of 1995 (44 U.S.C. 3501 *et seq.*).

5. Reports of Payments or Other Transfers of Value to Covered Recipients ICRs Regarding Reports of Payments or Other Transfers of Value and Physician Ownership and Investment Interests (§ 403.904(c)(8)(d)(3), and (g))

The proposed amendment of § 403.904(c)(8) would require applicable manufacturers and applicable group purchasing organizations (GPOs) to report the marketed name of covered and non-covered drugs, devices, biologicals and medical supplies. This amendment would have non-measurable effect on current burden estimates since the manufacturers and GPOs are already required to report the marketed name for drugs and biologicals and report either the marketed name, therapeutic area, or product category for devices and medical supplies. This requirement has been approved by OMB under control number 0938–1173.

Section 403.904(d)(3) would require that applicable manufacturers and applicable GPOs report the form of payment or other transfers of value as: Cash or cash equivalent, in-kind items or services, stock, stock option, or any other ownership investment. The burden associated with this provision is the time and effort it would take each applicable manufacturer and applicable GPO to revise their reporting system to report the form of payment.

The proposed removal of § 403.904(g) would require applicable manufacturers and applicable GPOs of covered drugs, devices, biologicals, and medical supplies to report annually to CMS all payments or other transfers of value provided as compensation for speaking at a continuing education program. The ongoing burden associated with this provision is the time and effort it would take each applicable manufacturer and applicable GPO to report payments or other transfers of value to CMS which were provided to physicians at a continuing education program. We estimate that it will take 1.0 hour to report payments or other transfers of value to CMS which were provided to physician at a continuing education program.

We estimate that it would take 1.0 hour to report payments or other transfers of value to CMS which were provided to physician covered

recipients as compensation for speaking at a continuing education program and 0.5 hours to revise an applicable manufacturer or applicable GPO's reporting system to report the form of payment.

In deriving these figures, we used the following hourly labor rates and estimated the time to complete each task: $26.39/hr and 1.0 hours for support staff to report payments or other transfers of value to CMS which were provided to physician covered recipients as compensation for speaking at a continuing education program and $47.55/hr and 0.5 hours for support to revise their reporting system to report the form of payment.

The preceding requirements and burden estimates will be added to the existing PRA-related requirements and burden estimates that have been approved by OMB under OCN 0938–1173.

6. ICRs Regarding Physician Payment, Efficiency, and Quality Improvements—Physician Quality Reporting System

The annual burden estimate is calculated separately for the 2015 PQRS for: (1) Individual eligible professionals and group practices using the claims (for eligible professionals only), (2) qualified registry and QCDR, (3) EHR-based reporting mechanisms, and (4) group practices using the group practice reporting option (GPRO). There is also a separate annual burden estimate for qualified registry and QCDR vendors who wish to be qualified to submit quality measures data. Please note that we are grouping group practices using the qualified registry and EHR-based reporting mechanisms with the burden estimate for individual eligible professionals using the qualified registry and EHR-based reporting mechanisms because we believe the criteria for satisfactory reporting for group practices using these 2 reporting mechanisms under the GPRO are similar to the satisfactory reporting criteria for eligible professionals using these reporting mechanisms.

a. Burden Estimate for PQRS Reporting by Individual Eligible Professionals: Reporting in General

According to the 2012 Reporting Experience, ''more than 1.2 million eligible professionals were eligible to participate in the 2012 PQRS, Medicare Shared Savings Program, and Pioneer ACO Model.'' [14] In this burden estimate, we assume that 1.2 million eligible professionals, the same number of eligible professionals eligible to participate in the PQRS in 2012, will be eligible to participate in the PQRS. Historically, the PQRS has never experienced 100 percent participation in reporting for the PQRS. Therefore, we believe that although 1.2 million eligible professionals will be subject to the 2017 PQRS payment adjustment, not all eligible participants will report quality measures data for purposes of the 2017 PQRS payment adjustment. In this burden estimate, we will only provide burden estimates for the eligible professionals and group practices who attempt to submit quality measures data for purposes of the 2017 PQRS payment adjustment.

In 2012, 435,871 eligible professionals (36 percent of eligible professionals, including those who belonged to group practices that reported under the GPRO and eligible professionals within an ACO that participated in the PQRS via the Shared Savings Program or Pioneer ACO model) participated in the PQRS, Medicare Shared Savings Program, or Pioneer ACO Model.[15] We expect to see a significant increase in participation in reporting for the PQRS in 2015 than 2012 as eligible professionals were not subject to a PQRS payment adjustment in 2012. Last year, we estimated that we would see a 50 percent participation rate in 2015. We still believe that a 14 percent increase in participation from 2012 is reasonable in 2015. Therefore, we estimate that 50 percent of eligible professionals (or approximately 600,000 eligible professionals) will report quality measures data for purposes of the 2017 PQRS payment adjustment.

With respect to the PQRS, the burden associated with the requirements of this voluntary reporting initiative is the time and effort associated with individual eligible professionals identifying applicable quality measures for which they can report the necessary information, selecting a reporting option, and reporting the information on their selected measures or measures group to CMS using their selected reporting option.

We believe the labor associated with eligible professionals and group practices reporting quality measures data in the PQRS is primarily handled by an eligible professional's or group practice's billing clerk or computer analyst trained to report quality measures data. Therefore, we will consider the hourly wage of a billing clerk and computer analyst in our estimates. For purposes of this burden estimate, we assume that a billing clerk will handle the administrative duties associated with participating in the PQRS. According to information published by the Bureau of Labor Statistics, available at *http://www.bls.gov/oes/current/oes433021.htm,* the mean hourly wage for a billing clerk is approximately $16.00/hour. Therefore, for purposes of handling administrative duties, we estimate an average labor cost of $16.00/hour. In addition, for purposes of this burden estimate, we assume that a computer analyst will engage in the duties associated with the reporting of quality measures. According to information published by the Bureau of Labor Statistics, available at *http://www.bls.gov/oes/current/oes151121.htm,* the mean hourly wage for a computer analyst is approximately $41.00/hour. Therefore, for purposes of reporting on quality measures, we estimate an average labor cost of $41.00/hour.

For individual eligible professionals, the burden associated with the requirements of this reporting initiative is the time and effort associated with eligible professionals identifying applicable quality measures for which they can report the necessary information, collecting the necessary information, and reporting the information needed to report the eligible professional's measures. We believe it is difficult to accurately quantify the burden because eligible professionals may have different processes for integrating the PQRS into their practice's work flows. Moreover, the time needed for an eligible professional to review the quality measures and other information, select measures applicable to his or her patients and the services he or she furnishes to them, and incorporate the use of quality data codes into the office work flows is expected to vary along with the number of measures that are potentially applicable to a given professional's practice. Since eligible professionals are generally required to report on at least 9 measures covering at least 3 National Quality Strategy domains criteria for satisfactory reporting (or, in lieu of satisfactory reporting, satisfactory participation in a QCDR) for the 2017 PQRS payment adjustment, we assume that each eligible professional reports on an average of 9 measures for this burden analysis.

For eligible professionals who are participating in PQRS for the first time, we will assign 5 total hours as the amount of time needed for an eligible professional's billing clerk to review the PQRS measures list, review the various

[14] Centers for Medicare and Medicaid Services, *2012 Reporting Experience Including Trends (2007–2013): Physician Quality Reporting System and Electronic Prescribing (eRx) Incentive Program,* March 14, 2014, at xiii.

[15] 15 Id. at XV.

reporting options, select the most appropriate reporting option, identify the applicable measures or measures groups for which they can report the necessary information, review the measure specifications for the selected measures or measures groups, and incorporate reporting of the selected measures or measures groups into the office work flows. The measures list contains the measure title and brief summary information for the eligible professional to review. Assuming the eligible professional has received no training from his/her specialty society, we estimate it will take an eligible professional's billing clerk up to 2 hours to review this list, review the reporting options, and select a reporting option and measures on which to report. If an eligible professional has received training, then we believe this would take less time. CMS believes 3 hours is plenty of time for an eligible professional to review the measure specifications of 9 measures or 1 measures group they select to report for purposes of participating in PQRS and to develop a mechanism for incorporating reporting of the selected measures or measures group into the office work flows. Therefore, we believe that the start-up cost for an eligible professional to report PQRS quality measures data is 5 hours × $16/hour = $80.

We continue to expect the ongoing costs associated with PQRS participation to decline based on an eligible professional's familiarity with and understanding of the PQRS, experience with participating in the PQRS, and increased efforts by CMS and stakeholders to disseminate useful educational resources and best practices.

We believe the burden associated with reporting the quality measures will vary depending on the reporting mechanism selected by the eligible professional. As such, we break down the burden estimates by eligible professionals and group practices participating in the GPRO according to the reporting mechanism used.

b. Burden Estimate for PQRS Reporting by Individual Eligible Professionals and Group Practices: Claims-Based Reporting Mechanism

According to the 2011 PQRS and eRx Experience Report, in 2011, 229,282 of the 320,422 eligible professionals (or 72 percent) of eligible professionals used the claims-based reporting mechanism. According to the 2012 Reporting Experience, 248,206 eligible professionals participated in the PQRS using the claims-based reporting mechanism in 2012.[16] Preliminary estimates show that 252,567 eligible professionals participated in the PQRS using the claims-based reporting mechanism in 2013.[17]

According to the historical data cited above, while the claims-based reporting mechanism is still the most widely-used reporting mechanism, we are seeing a decline in the use of the claims-based reporting mechanism in the PQRS. While these eligible professionals continue to participate in the PQRS, these eligible professionals have started to shift towards the use of other reporting mechanisms—mainly the GPRO web interface (whether used by a PQRS GPRO or an ACO participating in the PQRS via the Medicare Shared Savings Program or the Pioneer ACO Model), registry, or the EHR-based reporting mechanisms. For purposes of this burden estimate, based on PQRS participation using the claims-based reporting mechanism in 2012 and 2013, we assume that approximately 250,000 eligible professionals will participate in the PQRS using the claims-based reporting mechanism.

For the claims based reporting option, eligible professionals must gather the required information, select the appropriate quality data codes (QDCs), and include the appropriate QDCs on the claims they submit for payment. The PQRS will collect QDCs as additional (optional) line items on the existing HIPAA transaction 837 P and/or CMS form CMS–1500 (OMB control number 0938–0999). We do not anticipate any new forms and or any modifications to the existing transaction or form. We also do not anticipate changes to the 837 P or CMS–1500 for CY 2015.

We estimate the cost for an eligible professional to review the list of quality measures or measures groups, identify the applicable measures or measures group for which they can report the necessary information, incorporate reporting of the selected measures into the office work flows, and select a PQRS reporting option to be approximately $205 per eligible professional ($41 per hour × 5 hours).

Based on our experience with the Physician Voluntary Reporting Program (PVRP), we continue to estimate that the time needed to perform all the steps necessary to report each measure (that is, reporting the relevant quality data code(s) for 9 measures measure) would range from 15 seconds (0.25 minutes) to over 12 minutes for complicated cases and/or measures, with the median time being 1.75 minutes. To report 9 measures, we estimate that it would take approximately 2.25 minutes to 108 minutes to perform all of the necessary reporting steps.

Per measure, at an average labor cost of $41/hour per practice, the cost associated with this burden will range from $0.17 to about $8.20 for more complicated cases and/or measures, with the cost for the median practice being $1.20. To report 9 measures, using an average labor cost of $41/hour, we estimated that the cost of reporting for an eligible professional via claims would range from $1.53 (2.25 minutes or 0.0375 hours × $41/hour) to $73.80 (108 minutes or 1.8 hours × $41/hour) per reported case.

The total estimated annual burden for this requirement will also vary along with the volume of claims on which quality data is reported. In previous years, when we required reporting on 80 percent of eligible cases for claims based reporting, we found that on average, the median number of reporting instances for each of the PQRS measures was 9. Since we reduced the required reporting rate by over one third to 50 percent, then for purposes of this burden analysis we assume that an eligible professional or eligible professional in a group practice will need to report each selected measure for 6 reporting instances. The actual number of cases on which an eligible professional or group practice is required to report quality measures data will vary, however, with the eligible professional's or group practice's patient population and the types of measures on which the eligible professional or group practice chooses to report (each measure's specifications includes a required reporting frequency).

Based on these assumptions, we estimate that the total annual reporting burden per individual eligible professional associated with claims based reporting will range from 13.5 minutes (0.25 minutes per measure × 9 measures × 6 cases per measure) to 648 minutes (12 minutes per measure × 9 measures × 6 cases per measure), with the burden to the median practice being 94.5 minutes (1.75 minutes per measure × 9 measures × 6 cases). We estimate the total annual reporting cost per eligible professional or eligible professional in a group practice associated with claims based reporting will range from $9.18 ($0.17 per measure × 9 measures × 6 cases per measure) to $442.80 ($8.20 per measure × 9 measures × 6 cases per measure), with the cost to the median practice being $64.58 per eligible professional ($1.20 per measure × 9 measures × 6 cases per measure).

[16] *Id.* at xvi. See Figure 4.

[17] *Id.*

c. Burden Estimate for PQRS Reporting by Individual Eligible Professionals and Group Practices: Qualified Registry-based and QCDR-based Reporting Mechanisms

In 2011, approximately 50,215 (or 16 percent) of the 320,422 eligible professionals participating in PQRS used the qualified registry-based reporting mechanism. According to the 2012 Reporting Experience, 36,473 eligible professionals reported individual measures via the registry-based reporting mechanism, and 10,478 eligible professionals reporting measures groups via the registry-based reporting mechanism in 2012.[18] Therefore, approximately 47,000 eligible professionals participated in the PQRS using the registry-based reporting mechanism in 2012. Please note that we currently have no data on participation in the PQRS via a QCDR as 2014 is the first year in which an eligible professional may participate in the PQRS via a QCDR.

We believe that the rest of the eligible professionals not participating in other PQRS reporting mechanisms will use either the registry or QCDR reporting mechanisms for the following reasons:

- The PQRS measures set is moving away from use of claims-based measures and moving towards the use of registry-based measures.
- We believe the number of QCDR vendors will increase as the QCDR reporting mechanism evolves.

Therefore, based on these assumptions, we expect to see a significant jump from 47,000 eligible professionals to approximately 165,000 eligible professionals using either the registry-based reporting mechanism or QCDR in 2015. We believe the majority of these eligible professionals will participate in the PQRS using a QCDR, as we presume QCDRs will be larger entities with more members.

For qualified registry based and QCDR-based reporting, there will be no additional time burden for eligible professionals or group practices to report data to a qualified registry as eligible professionals and group practices opting for qualified registry based reporting or use of a QCDR will more than likely already be reporting data to the qualified registry for other purposes and the qualified registry will merely be repackaging the data for use in the PQRS. Little, if any, additional data will need to be reported to the qualified registry or QCDR solely for purposes of participation in the PQRS. However, eligible professionals and group practices will need to authorize or instruct the qualified registry or QCDR to submit quality measures results and numerator and denominator data on quality measures to CMS on their behalf. We estimate that the time and effort associated with this will be approximately 5 minutes per eligible professional or eligible professional within a group practice.

Please note that, unlike the claims-based reporting mechanism that would require an eligible professional to report data to CMS on quality measures on multiple occasions, an eligible professional would not be required to submit this data to CMS, as the qualified registry or QCDR would perform this function on the eligible professional's behalf.

d. Burden Estimate for PQRS Reporting by Individual Eligible Professionals and Group Practices: EHR-Based Reporting Mechanism

According to the 2011 PQRS and eRx Experience Report, in 2011, 560 (or less than 1 percent) of the 320,422 eligible professionals participating in PQRS used the EHR-based reporting mechanism. In 2012 there was a sharp increase in reporting via the EHR-based reporting mechanism. Specifically, according to the 2012 Reporting Experience, in 2012, 19,817 eligible professionals submitted quality data for the PQRS through a qualified EHR.[19]

We believe the number of eligible professionals and group practices using the EHR-based reporting mechanism will steadily increase as eligible professionals become more familiar with EHR products and more eligible professionals participate in programs encouraging the use of an EHR, such as the EHR Incentive Program. In particular, we believe eligible professionals will transition from using the claims-based to the EHR-based reporting mechanism. To account for this anticipated increase, we continue to estimate that approximately 50,000 eligible professionals, whether participating as an individual or part of a group practice under the GPRO, would use the EHR-based reporting mechanism in CY 2015.

For EHR-based reporting, which includes EHR reporting via a direct EHR product and an EHR data submission vendor's product, the eligible professional or group practice must review the quality measures on which we will be accepting PQRS data extracted from EHRs, select the appropriate quality measures, extract the necessary clinical data from his or her EHR, and submit the necessary data to the CMS-designated clinical data warehouse.

For EHR based reporting for the PQRS, the individual eligible professional or group practice may either submit the quality measures data directly to CMS from their EHR or utilize an EHR data submission vendor to submit the data to CMS on the eligible professional's or group practice's behalf. To submit data to CMS directly from their EHR, the eligible professional or eligible professional in a group practice must have access to a CMS specified identity management system, such as IACS, which we believe takes less than 1 hour to obtain. Once an eligible professional or eligible professional in a group practice has an account for this CMS specified identity management system, he or she will need to extract the necessary clinical data from his or her EHR, and submit the necessary data to the CMS designated clinical data warehouse. With respect to submitting the actual data file for the respective reporting period, we believe that this will take an eligible professional or group practice no more than 2 hours, depending on the number of patients on which the eligible professional or group practice is submitting. We believe that once the EHR is programmed by the vendor to allow data submission to CMS, the burden to the eligible professional or group practice associated with submission of data on quality measures should be minimal as all of the information required to report the measure should already reside in the eligible professional's or group practice's EHR.

e. Burden Estimate for PQRS Reporting by Group Practices Using the GPRO Web Interface

As we noted in last year's estimate, according to the 2011 Experience Report, approximately 200 group practices participated in the GPRO in 2011. According to the 2012 Reporting Experience, 66 practices participated in the PQRS GPRO.[20] In addition, 144 ACOs participated in the PQRS GPRO through either the Medicare Shared Savings Program (112 ACOs) or Pioneer ACO Model (32 practices).[21] These group practices encompass 134,510 eligible professionals (or approximately 140,000 eligible professionals).[22] Since it seems that roughly 200 group practices participated in the GPRO in 2011 and 2012, based on these numbers, we assume that 200 group practices (accounting for approximately 135,000

[18] *Id.* at xvi. *See* Figure 4.

[19] *Id.* at xv.

[20] *Id.* at xv.

[21] *Id.* at xvi.

[22] *Id.* at 18.

eligible professionals) will participate in the PQRS using the GPRO web interface in 2015.

With respect to the process for group practices to be treated as satisfactorily submitting quality measures data under the PQRS, group practices interested in participating in the PQRS through the GPRO must complete a self-nomination process similar to the self-nomination process required of qualified registries. However, since a group practice using the GPRO web interface would not need to determine which measures to report under PQRS, we believe that the self-nomination process is handled by a group practice's administrative staff. Therefore, we estimate that the self-nomination process for the group practices for the PQRS involves approximately 2 hours per group practice to review the PQRS GPRO and make the decision to participate as a group rather than individually and an additional 2 hours per group practice to draft the letter of intent for self-nomination, gather the requested TIN and NPI information, and provide this requested information. It is estimated that each self-nominated entity will also spend 2 hours undergoing the vetting process with CMS officials. We assume that the group practice staff involved in the group practice self-nomination process has an average practice labor cost of $16 per hour. Therefore, assuming the total burden hours per group practice associated with the group practice self-nomination process is 6 hours, we estimate the total cost to a group practice associated with the group practice self-nomination process to be approximately $96 ($16 per hour × 6 hours per group practice).

The burden associated with the group practice reporting requirements under the GPRO is the time and effort associated with the group practice submitting the quality measures data. For physician group practices, this would be the time associated with the physician group completing the web interface. We estimate that the time and effort associated with using the GPRO web interface will be comparable to the time and effort associated to using the PAT. As stated above, the information collection components of the PAT have been reviewed by OMB and are approved under OCN 0938–0941(form CMS–10136) with an expiration date of July 31, 2015, for use in the PGP, MCMP, and EHR demonstrations. As the GPRO was only recently implemented in 2010, it is difficult to determine the time and effort associated with the group practice submitting the quality measures data. As such, we will use the same burden estimate for group practices participating in the GPRO as we use for group practices participating in the PGP, MCMP, and EHR demonstrations. Since these changes will not have any impact on the information collection requirements associated with the PAT and we will be using the same data submission process used in the PGP demonstration, we estimate that the burden associated with a group practice completing data for PQRS under the web interface will be the same as for the group practice to complete the PAT for the PGP demonstration. In other words, we estimate that, on average, it will take each group practice 79 hours to submit quality measures data via the GPRO web interface at a cost of $40 per hour. Therefore, the total estimated annual cost per group practice is estimated to be approximately $3,160.

7. ICRs Regarding the Medicare Shared Savings Program

Section 3022 of the Affordable Care Act exempts any collection of information associated with the Medicare Shared Savings Program from the requirements of the Paperwork Reduction Act of 1995 (44 U.S.C. 3501 *et seq.*).

B. Summary of Proposed Burden Estimates

Table 59 summarizes this rule's proposed requirements and burden estimates.

TABLE 59—PROPOSED ANNUAL RECORDKEEPING AND REPORTING REQUIREMENTS AND BURDEN

Regulation section(s)	OMB & CMS ID Nos.	Respondents	Responses (total)	Burden (time) per response	Total annual burden (hours)	Labor cost of reporting ($/hr)	Total cost ($)
403.904(d)(3)	0938–1173 (CMS–10419.	1,150 (manufacturers).	1,150	1.0 hr (reporting).	1,150	26.39	30,349
				0.5 hr (system upgrades).	575	47.55	27,341
		420 (GPOs)	420	1.0 hr (reporting).	420	26.39	11,084
				0.5 hr (system upgrades).	210	47.55	9,986
CY 2015 PQRS (start up for first time participants).	0938–1059 (CMS–10276).	164,000	164,000	5 hr	820,000	16.00	13,120,000
CY 2015 PQRS (Claims-Based Reporting Mechanism).	0938–1059 (CMS–10276).	250,000	250,000 (preparation).	5 hr	1,250,000	41.00	51,250,000
			13,500,000 (reporting)*.	1.75 min	393,750	41.00	16,143,750
CY 2015 PQRS (Qualified Registry-based and QCDR-based Reporting Mechanisms).	0938–1059 (CMS–10276).	165,000	165,000	5 min	13,750	N/A**	N/A
CY 2015 PQRS (EHR-Based Reporting Mechanism).	0938–1059 (CMS–10276).	50,000	50,000	N/A***	N/A	N/A	N/A

TABLE 59—PROPOSED ANNUAL RECORDKEEPING AND REPORTING REQUIREMENTS AND BURDEN—Continued

Regulation section(s)	OMB & CMS ID Nos.	Respondents	Responses (total)	Burden (time) per response	Total annual burden (hours)	Labor cost of reporting ($/hr)	Total cost ($)
CY 2015 PQRS (Group Practices Using the GPRO Web Interface).	0938–1059 (CMS–10276).	200	200 (self-nomination process).	6 hr	1,200	16.00	19,200
			200 (reporting)	79 hr	15,800	41.00	647,800
Total		630,770	14,130,970		2,496,855		81,259,510

* 13,500,000 = 250,000 × number of measures (9) × number of cases (6).
** There is no set cost. As explained above, the cost would vary depending on the registry used. Additionally, many EPs and group practices using a registry or QCDR will most likely use a registry or QCDR for other purposes.
*** As explained above, the burden associated with the submission of data is minimal.

C. Submission of PRA-Related Comments

We have submitted a copy of this proposed rule to OMB for its review of the rule's information collection and recordkeeping requirements. These requirements are not effective until they have been approved by OMB.

To obtain copies of the supporting statement and any related forms for the proposed paperwork collections referenced above, access CMS' Web site at *http://www.cms.hhs.gov/PaperworkReductionActof1995*; email your request, including your address, phone number, OMB number, and CMS document identifier, to *Paperwork@cms.hhs.gov*; or call the Reports Clearance Office at 410–786–1326.

We invite public comments on these potential information collection requirements. If you comment on these information collection and recordkeeping requirements, please submit your comments electronically as specified in the **ADDRESSES** section of this proposed rule.

PRA-specific comments must be received by September 2, 2014.

V. Response to Comments

Because of the large number of public comments we normally receive on **Federal Register** documents, we are not able to acknowledge or respond to them individually. We will consider all comments we receive by the date and time specified in the **DATES** section of this preamble, and, when we proceed with a subsequent document, we will respond to the comments in the preamble to that document.

VI. Regulatory Impact Analysis

A. Statement of Need

This proposed rule is necessary to make payment and policy changes under the Medicare PFS and to make required statutory changes under the Pathway for SGR Reform Act of 2013 and the PAMA. This proposed rule also is necessary to make changes to Part B payment policy for clinical diagnostic lab tests and other Part B related policies.

B. Overall Impact

We have examined the impact of this rule as required by Executive Order 12866 on Regulatory Planning and Review (September 30, 1993), Executive Order 13563 on Improving Regulation and Regulatory Review (February 2, 2013), the Regulatory Flexibility Act (RFA) (September 19, 1980, Pub. L. 96–354), section 1102(b) of the Social Security Act, section 202 of the Unfunded Mandates Reform Act of 1995 (March 22, 1995; Pub. L. 104–4), Executive Order 13132 on Federalism (August 4, 1999) and the Congressional Review Act (5 U.S.C. 804(2)).

Executive Orders 12866 and 13563 direct agencies to assess all costs and benefits of available regulatory alternatives and, if regulation is necessary, to select regulatory approaches that maximize net benefits (including potential economic, environmental, public health and safety effects, distributive impacts, and equity). A regulatory impact analysis (RIA) must be prepared for major rules with economically significant effects ($100 million or more in any 1 year). We estimate, as discussed below in this section, that the PFS provisions included in this proposed rule will redistribute more than $100 million in 1 year. Therefore, we estimate that this rulemaking is ''economically significant'' as measured by the $100 million threshold, and hence also a major rule under the Congressional Review Act. Accordingly, we have prepared a RIA that, to the best of our ability, presents the costs and benefits of the rulemaking. The RFA requires agencies to analyze options for regulatory relief of small entities. For purposes of the RFA, small entities include small businesses, nonprofit organizations, and small governmental jurisdictions. Most hospitals, practitioners and most other providers and suppliers are small entities, either by nonprofit status or by having annual revenues that qualify for small business status under the Small Business Administration standards. (For details see the SBA's Web site at *http://www.sba.gov/content/table-small-business-size-standards* (refer to the 620000 series)). Individuals and States are not included in the definition of a small entity.

The RFA requires that we analyze regulatory options for small businesses and other entities. We prepare a regulatory flexibility analysis unless we certify that a rule would not have a significant economic impact on a substantial number of small entities. The analysis must include a justification concerning the reason action is being taken, the kinds and number of small entities the rule affects, and an explanation of any meaningful options that achieve the objectives with less significant adverse economic impact on the small entities.

Approximately 95 percent of practitioners, other providers and suppliers are considered to be small entities, based upon the SBA standards. There are over 1 million physicians, other practitioners, and medical suppliers that receive Medicare payment under the PFS. Because many of the affected entities are small entities, the analysis and discussion provided in this section as well as elsewhere in this proposed rule is intended to comply with the RFA requirements.

In addition, section 1102(b) of the Act requires us to prepare an RIA if a rule may have a significant impact on the operations of a substantial number of small rural hospitals. This analysis must conform to the provisions of section 603 of the RFA. For purposes of section 1102(b) of the Act, we define a small rural hospital as a hospital that is

located outside of a Metropolitan Statistical Area for Medicare payment regulations and has fewer than 100 beds. We are not preparing an analysis for section 1102(b) of the Act because we have determined, and the Secretary certifies, that this proposed rule would not have a significant impact on the operations of a substantial number of small rural hospitals.

Section 202 of the Unfunded Mandates Reform Act of 1995 also requires that agencies assess anticipated costs and benefits on State, local, or tribal governments or on the private sector before issuing any rule whose mandates require spending in any 1 year of $100 million in 1995 dollars, updated annually for inflation. In 2014, that threshold is approximately $141 million. This proposed rule would impose no mandates on state, local, or tribal governments or on the private sector.

Executive Order 13132 establishes certain requirements that an agency must meet when it promulgates a proposed rule (and subsequent final rule) that imposes substantial direct requirement costs on State and local governments, preempts State law, or otherwise has Federalism implications. Since this regulation does not impose any costs on State or local governments, the requirements of Executive Order 13132 are not applicable.

We have prepared the following analysis, which together with the information provided in the rest of this preamble, meets all assessment requirements. The analysis explains the rationale for and purposes of this proposed rule; details the costs and benefits of the rule; analyzes alternatives; and presents the measures we would use to minimize the burden on small entities. As indicated elsewhere in this proposed rule, we are proposing to implement a variety of changes to our regulations, payments, or payment policies to ensure that our payment systems reflect changes in medical practice and the relative value of services, and to implement statutory provisions. We provide information for each of the policy changes in the relevant sections of this proposed rule. We are unaware of any relevant Federal rules that duplicate, overlap, or conflict with this proposed rule. The relevant sections of this proposed rule contain a description of significant alternatives if applicable.

C. Changes in Relative Value Unit (RVU) Impacts

1. Resource-Based Work, PE, and MP RVUs

Section 1848(c)(2)(B)(ii)(II) of the Act requires that increases or decreases in RVUs may not cause the amount of expenditures for the year to differ by more than $20 million from what expenditures would have been in the absence of these changes. If this threshold is exceeded, we make adjustments to preserve budget neutrality.

Our estimates of changes in Medicare revenues for PFS services compare payment rates for CY 2014 with proposed payment rates for CY 2015 using CY 2013 Medicare utilization. The payment impacts in this proposed rule reflect averages by specialty based on Medicare utilization. The payment impact for an individual physician could vary from the average and would depend on the mix of services the practitioner furnishes. The average percentage change in total revenues would be less than the impact displayed here because practitioners and other entities generally furnish services to both Medicare and non-Medicare patients. In addition, practitioners and other entities may receive substantial Medicare revenues for services under other Medicare payment systems. For instance, independent laboratories receive approximately 83 percent of their Medicare revenues from clinical laboratory services that are paid under the Clinical Lab Fee Schedule.

The annual update to the PFS conversion factor (CF) is calculated based on a statutory formula that measures actual versus allowed or ''target'' expenditures, and applies a sustainable growth rate (SGR) calculation intended to control growth in aggregate Medicare expenditures for physicians' services. This update methodology is typically referred to as the ''SGR'' methodology, although the SGR is only one component of the formula. Medicare PFS payments for services are not withheld if the percentage increase in actual expenditures exceeds the SGR. Rather, the PFS update, as specified in section 1848(d)(4) of the Act, is adjusted to eventually bring actual expenditures back in line with targets. If actual expenditures exceed allowed expenditures, the update is reduced. If actual expenditures are less than allowed expenditures, the update is increased. We provide our most recent estimate of the SGR and physician update for CY 2015 on the CMS Web site at *http://www.cms.gov/Medicare/Medicare-Fee-for-Service-Payment/SustainableGRatesConFact/index.html?redirect=/SustainableGRatesConFact/*.

The PAMA has replaced the reduction in the PFS update that would otherwise occur on January 1, 2015 with a zero percent update from January 1, 2015 to March 31, 2015. We estimate that, based upon the zero percent update and the adjustments necessary to maintain budget neutrality for the policies in this proposed rule the CF for this period will be $35.7977. Although the PAMA provides for a zero percent update for only the first 3 months of the year, the impacts in this proposed rule are based upon this CF being applicable throughout the year. However, in the absence of further Congressional action, the applicable update for the remainder of the year will be based on the statutory SGR formula and the CF will be adjusted accordingly.

By law, we are required to apply these updates in accordance with sections 1848(d) and (f) of the Act, and any negative updates can only be averted by an Act of the Congress. While the Congress has provided temporary relief from negative updates for every year since 2003, a long-term solution is critical. We are committed to working with the Congress to permanently reform the SGR methodology for Medicare PFS updates.

Table 60 shows the payment impact on PFS services of the proposals contained in this proposed rule. To the extent that there are year-to-year changes in the volume and mix of services provided by practitioners, the actual impact on total Medicare revenues will be different from those shown in Table 60 (CY 2015 PFS Proposed Rule Estimated Impact on Total Allowed Charges by Specialty). The following is an explanation of the information represented in Table 60:

- *Column A (Specialty)*: Identifies the specialty for which data is shown.
- *Column B (Allowed Charges)*: The aggregate estimated PFS allowed charges for the specialty based on CY 2013 utilization and CY 2014 rates. That is, allowed charges are the PFS amounts for covered services and include coinsurance and deductibles (which are the financial responsibility of the beneficiary). These amounts have been summed across all services furnished by physicians, practitioners, and suppliers within a specialty to arrive at the total allowed charges for the specialty.
- *Column C (Impact of Work RVU Changes)*: This column shows the estimated CY 2015 impact on total allowed charges of the proposed changes in the work RVUs, including

the impact of changes due to potentially misvalued codes.

• *Column D (Impact of PE RVU Changes)*: This column shows the estimated CY 2014 impact on total allowed charges of the proposed changes in the PE RVUs.

• *Column E (Impact of RVU Changes)*: This column shows the estimated CY 2015 impact on total allowed charges of the proposed changes in the MP RVUs, which are primarily driven by the required five-year review and update of MP RVUs.

• *Column F (Combined Impact)*: This column shows the estimated CY 2015 combined impact on total allowed charges of all the proposed changes in the previous columns. Column F may not equal the sum of columns C, D, and E due to rounding.

TABLE 60—CY 2015 PFS PROPOSED RULE ESTIMATED IMPACT ON TOTAL ALLOWED CHARGES BY SPECIALTY *

Specialty (A)	Allowed charges (mil) (B)	Impact of work RVU changes (C)	Impact of PE RVU changes (D)	Impact of MP RVU changes (E)	Combined impact ** (F)
TOTAL	$87,374	0	0	0	0
ALLERGY/IMMUNOLOGY	215	0	0	0	0
ANESTHESIOLOGY	1,979	0	0	0	0
AUDIOLOGIST	60	0	0	−1	−1
CARDIAC SURGERY	351	0	0	−1	−1
CARDIOLOGY	6,420	0	0	0	1
CHIROPRACTOR	803	0	0	−1	−1
CLINICAL PSYCHOLOGIST	695	0	−1	0	−1
CLINICAL SOCIAL WORKER	514	0	−1	0	−1
COLON AND RECTAL SURGERY	158	0	0	0	0
CRITICAL CARE	285	0	0	0	1
DERMATOLOGY	3,162	0	0	0	0
DIAGNOSTIC TESTING FACILITY	705	0	−2	0	−2
EMERGENCY MEDICINE	3,024	0	0	1	1
ENDOCRINOLOGY	455	0	0	0	0
FAMILY PRACTICE	6,061	1	1	0	2
GASTROENTEROLOGY	1,875	0	0	0	0
GENERAL PRACTICE	498	0	0	0	0
GENERAL SURGERY	2,222	0	0	0	0
GERIATRICS	224	1	1	0	1
HAND SURGERY	159	0	0	0	0
HEMATOLOGY/ONCOLOGY	1,803	0	1	0	1
INDEPENDENT LABORATORY	703	0	3	0	3
INFECTIOUS DISEASE	647	0	0	0	1
INTERNAL MEDICINE	11,026	1	1	0	2
INTERVENTIONAL PAIN MGMT	672	0	1	0	1
INTERVENTIONAL RADIOLOGY	270	0	−1	0	−1
MULTISPECIALTY CLINIC/OTHER PHY	83	0	0	0	1
NEPHROLOGY	2,167	0	0	0	0
NEUROLOGY	1,502	0	0	0	0
NEUROSURGERY	733	0	0	1	1
NUCLEAR MEDICINE	48	0	0	0	1
NURSE ANES/ANES ASST	1,177	0	0	0	0
NURSE PRACTITIONER	2,201	0	0	0	1
OBSTETRICS/GYNECOLOGY	690	0	0	0	0
OPHTHALMOLOGY	5,663	0	0	−2	−2
OPTOMETRY	1,152	0	1	−1	0
ORAL/MAXILLOFACIAL SURGERY	44	0	0	0	0
ORTHOPEDIC SURGERY	3,649	0	0	0	0
OTHER	27	0	0	−1	−1
OTOLARNGOLOGY	1,167	0	0	0	0
PATHOLOGY	1,067	0	1	0	1
PEDIATRICS	58	0	0	0	0
PHYSICAL MEDICINE	998	0	0	0	0
PHYSICAL/OCCUPATIONAL THERAPY	2,806	0	0	1	1
PHYSICIAN ASSISTANT	1,553	0	0	0	1
PLASTIC SURGERY	368	0	0	−1	0
PODIATRY	1,979	0	0	0	0
PORTABLE X–RAY SUPPLIER	109	0	−3	0	−3
PSYCHIATRY	1,330	0	0	0	0
PULMONARY DISEASE	1,784	0	0	0	0
RADIATION ONCOLOGY	1,796	0	−4	0	−4
RADIATION THERAPY CENTERS	60	0	−8	0	−8
RADIOLOGY	4,497	0	−1	0	−2
RHEUMATOLOGY	538	0	0	0	0
THORACIC SURGERY	340	0	0	0	0
UROLOGY	1,829	0	0	0	0
VASCULAR SURGERY	970	0	0	0	1

* Table 60 shows only the payment impact on PFS services and does not include the effects of the change in the CF scheduled to occur on April 1, 2015 under current law.

** Column F may not equal the sum of columns C, D, and E due to rounding.

2. CY 2015 PFS Impact Discussion

a. Work RVU Impacts

The changes in work RVU impacts are almost entirely attributable to the payment for CCM services beginning in CY 2015. We finalized this separately billable CCM service in the CY 2014 final rule with comment period, effective beginning in CY 2015 (78 FR 74414 through 74427). We propose a payment rate for CCM services for CY 2015 in this proposed rule. Payment for this service at the proposed rate is expected to result in modest payment increases for family practice, internal medicine, and geriatrics.

b. PE RVU Impacts

Payment for CCM services also has a positive impact on the PE RVUs attributable to family practice, internal medicine, and geriatrics. The most widespread specialty impacts in PE RVUs are generally related to our proposal to implement the RUC recommendation regarding the film-to-digital migration of imaging inputs, which primarily affects portable x-ray suppliers, diagnostic testing facilities, and interventional radiology. Radiation oncology and radiation treatment centers are negatively impacted by our proposal to treat radiation treatment vaults as indirect PE rather than direct PEs. Other impacts result from adjustments of PE RVUs for services as discussed in section II.B.

c. MP RVU Impacts

The changes in MP RVUs are primarily attributable to proposed changes as part of the statutorily required review of MP RVUs every five years as described in section II.C of this proposed rule. Of particular note are the impacts on the specialties of ophthalmology (−2 percent) and optometry (−1 percent). In the course of preparation of the proposed MP RVUs, we discovered that we had made an error in calculating the MP RVUs for ophthalmology codes in the last five-year review CY that resulted in higher MP RVUs for ophthalmology and optometry for CY 2010 than would have resulted had the MP RVUs been calculated correctly.

d. Combined Impact

Column F of Table 60 displays the estimated CY 2015 combined impact on total allowed charges by specialty of all the proposed RVU changes. These impacts are estimated prior to the application of the negative CF update effective April 1, 2015, applicable under the current statute.

Table 61 (Impact of Proposed Rule on CY 2015 Payment for Selected Procedures) shows the estimated impact on total payments for selected high volume procedures of all of the proposed changes. We have included proposed payment rates for the period of January 1, 2015 through March 31, 2015, as well as those for April 1, 2015 through December 31, 2015. We selected these procedures for sake of illustration from among the most commonly furnished by a broad spectrum of specialties. The change in both facility rates and the nonfacility rates are shown. For an explanation of facility and nonfacility PE, we refer readers to Addendum A of this proposed rule.

TABLE 61—IMPACT OF PROPOSED RULE ON CY 2015 PAYMENT FOR SELECTED PROCEDURES

[Based on the March 2014 Preliminary Physician Update]

			Facility			Non-facility		
CPT [1]/HCPCS	MOD	Short Descriptor	CY 2014 [2]	CY 2015 Jan 1–March 31 [3]	Change	CY 2014 [2]	CY 2015 Jan 1–March 31 [3]	Change
11721		Debride nail 6 or more	$25.43	$25.42	0	$45.14	$45.46	1
17000		Destruct premalg lesion	53.38	52.98	−1	75.23	74.82	−1
27130		Total hip arthroplasty	1,394.94	1,397.90	0	NA	NA	NA
27244		Treat thigh fracture	1,261.68	1,269.03	1	NA	NA	NA
27447		Total knee arthroplasty	1,394.22	1,397.54	0	NA	NA	NA
33533		Cabg arterial single	1,955.92	1,930.93	−1	NA	NA	NA
35301		Rechanneling of artery	1,200.42	1,189.92	−1	NA	NA	NA
43239		Egd biopsy single/multiple	152.25	151.78	0	405.51	408.81	1
66821		After cataract laser surgery	324.55	314.66	−3	342.47	333.28	−3
66984		Cataract surg w/iol 1 stage	673.11	647.22	−4	NA	NA	NA
67210		Treatment of retinal lesion	523.37	506.18	−3	540.92	523.36	−3
71010		Chest x−ray 1 view frontal	NA	NA	NA	24.00	22.55	−6
71010	26	Chest x−ray 1 view frontal	9.31	9.31	0	9.31	9.31	0
77056		Mammogram both breasts	NA	NA	NA	116.07	164.31	42
77056	26	Mammogram both breasts	44.42	43.67	−2	44.42	43.67	−2
77057		Mammogram screening	NA	NA	NA	82.75	134.96	63
77057	26	Mammogram screening	35.82	35.08	−2	35.82	35.08	−2
77427		Radiation tx management x5	186.28	189.01	1	186.28	189.01	1
88305	26	Tissue exam by pathologist	38.33	38.30	0	38.33	38.30	0
90935		Hemodialysis one evaluation	73.44	73.39	0	NA	NA	NA
92012		Eye exam establish patient	54.81	52.98	−3	87.05	85.56	−2
92014		Eye exam&tx estab pt 1/>vst	82.75	80.54	−3	126.10	124.22	−1
93000		Electrocardiogram complete	NA	NA	NA	16.84	17.18	2
93010		Electrocardiogram report	8.60	8.59	0	8.60	8.59	0
93015		Cardiovascular stress test	NA	NA	NA	75.94	76.61	1
93307	26	Tte w/o doppler complete	45.85	46.18	1	45.85	46.18	1
93458	26	L hrt artery/ventricle angio	325.63	320.03	−2	325.63	320.03	−2
98941		Chiropract manj 3–4 regions	35.46	35.08	−1	41.55	41.17	−1
99203		Office/outpatient visit new	77.02	77.32	0	108.18	108.47	0
99213		Office/outpatient visit est	51.58	51.55	0	73.08	73.39	0
99214		Office/outpatient visit est	79.17	79.11	0	107.83	108.11	0

TABLE 61—IMPACT OF PROPOSED RULE ON CY 2015 PAYMENT FOR SELECTED PROCEDURES—Continued

[Based on the March 2014 Preliminary Physician Update]

			Facility			Non-facility		
CPT [1]/HCPCS	MOD	Short Descriptor	CY 2014 [2]	CY 2015 Jan 1–March 31 [3]	Change	CY 2014 [2]	CY 2015 Jan 1–March 31 [3]	Change
99222		Initial hospital care	138.63	138.18	0	NA	NA	NA
99223		Initial hospital care	204.19	204.40	0	NA	NA	NA
99231		Subsequent hospital care	39.41	39.38	0	NA	NA	NA
99232		Subsequent hospital care	72.36	73.03	1	NA	NA	NA
99233		Subsequent hospital care	104.24	104.89	1	NA	NA	NA
99236		Observ/hosp same date	219.24	219.80	0	NA	NA	NA
99239		Hospital discharge day	107.47	108.47	1	NA	NA	NA
99283		Emergency dept visit	61.97	62.29	1	NA	NA	NA
99284		Emergency dept visit	118.22	119.21	1	NA	NA	NA
99291		Critical care first hour	224.61	225.53	0	274.76	276.72	1
99292		Critical care addl 30 min	112.48	112.76	0	123.23	123.86	1
99348		Home visit est patient	NA	NA	NA	84.54	84.48	0
99350		Home visit est patient	NA	NA	NA	178.40	177.91	0
G0008		Immunization admin	NA	NA	NA	25.08	25.42	1

[1] CPT codes and descriptions are copyright 2013 American Medical Association. All Rights Reserved. Applicable FARS/DFARS apply.
[2] The CY 2014 CF is 35.8228.
[3] Payments based on the CY 2014 CF of 35.8228, adjusted to 35.7977 to include the budget neutrality adjustment and the zero percent update in the CF required by PAMA.

D. Effect of Proposed Changes in Telehealth List

As discussed in section II.E. of this proposed rule, we are proposing to add several new codes to the list of Medicare telehealth services. Although we expect these changes to increase access to care in rural areas, based on recent utilization of similar services already on the telehealth list, we estimate no significant impact on PFS expenditures from the proposed additions.

E. Effect of Proposed Changes in Geographic Practice Cost Indices (GPCIs)

As discussed in section II.D of this proposed rule, we are required to review and revise the GPCIs at least every 3 years and phase in the adjustment over 2 years (if there has not been an adjustment in the past year). For CY 2015, we are not proposing any revisions related to the data or the methodologies used to calculate the GPCIs except in regard to the Virgin Islands locality discussed in section II.E. However, since the 1.0 work GPCI floor provided in section 1848(e)(1)(E) of the Act is set to expire on March 31, 2015, we have included two set of GPCIs and GAFs for CY 2015—one set for January 1, 2015 through March 31, 2015 and another set for April 1, 2015 through December 31, 2015. The April 1, 2015 through December 31, 2015 GPCIs and GAFs reflect the statutory expiration of the 1.0 work GPCI floor.

F. Other Provisions of the Proposed Regulation

1. Ambulance Fee Schedule

The statutory ambulance extender provisions are self-implementing. As a result, there are no policy proposals associated with these provisions or associated impact in this rule. We are proposing only to correct the dates in the Code of Federal Regulations (CFR) at 42 CFR 414.610(c)(1)(ii) and 42 CFR 414.610(c)(5)(ii) to conform the regulations to these self-implementing statutory provisions.

The geographic designations for approximately 99.48 percent of ZIP codes would be unchanged if we adopt OMB's revised statistical area delineations and the updated RUCA codes. There are a similar number of ZIP codes that would change from rural to urban (122, or 0.28 percent) and from urban to rural (100, or 0.23 percent). In general, if we adopt OMB's revised delineations and the updated RUCA codes, it is expected that ambulance providers and suppliers in 100 ZIP codes within 11 states may experience payment increases while ambulance providers and suppliers in 122 ZIP codes within 22 states may experience payment decreases. None of the current ''Super Rural Bonus'' areas would lose their status if we adopt the revised OMB delineations and the updated RUCA codes. We estimate that the adoption of the revised OMB delineations and the updated RUCA codes would have minimal fiscal impact on the Medicare program because payments would, in effect, be redistributed.

2. Clinical Laboratory Fee Schedule

There is no impact because we are merely deleting language from the Code of Federal Regulations.

3. Removal of Employment Requirements for Services Furnished ''Incident to'' RHC and FQHC Visits

The removal of employment requirements for services furnished ''incident to'' RHC and FQHC visits will provide RHCs and FQHCs with greater flexibility in meeting their staffing needs, which may result in increasing access to care in underserved areas. There is no cost to the federal government, and we cannot estimate a cost savings for RHCs or FQHCs.

4. Access to Identifiable Data for the Center for Medicare and Medicaid Models

Given that, in general, participants in Innovation Center models receive funding support to participate in model tests, we do not anticipate an impact.

5. Local Coverage Determination Process for Clinical Diagnostic Laboratory Tests

The Local Coverage Determination Process for Clinical Diagnostic Laboratory Tests in section III.F of this proposed rule would not impact CY 2015 physician payments under the PFS.

6. Private Contracting/Opt Out

We are correcting cross-references and outdated terminology in the regulations that we inadvertently neglected to revise, and proposing a change in the appeals process to be used for certain

appeals relating to opt-out private contracting. We anticipate no or minimal impact as a result of these corrections.

7. Payment Policy for Locum Tenens Physicians

We are soliciting public comments regarding substitute physician billing arrangements. Since we are not proposing any new or revised requirements, there is no impact.

8. Reports of Payments or Other Transfers of Value to Covered Recipients

The changes to the Transparency Reports and Reporting of Physician Ownership or Investment Interests in section III.I of this proposed rule would not impact CY 2015 physician payments under the PFS.

9. Physician Compare

There will be no impact for the Physician Compare Web site because we are not collecting any information for the Physician Compare Web site.

10. Physician Quality Reporting System

According to the 2012 Reporting Experience, ''more than 1.2 million eligible professionals were eligible to participate in the 2012 PQRS, Medicare Shared Savings Program, and Pioneer ACO Model.''[23] In this burden estimate, we assume that 1.2 million eligible professionals, the same number of eligible professionals eligible to participate in the PQRS in 2012, will be eligible to participate in the PQRS. Since all eligible professionals are subject to the 2017 PQRS payment adjustment, we estimate that all 1.2 million eligible professionals will participate, participate (which includes, for the purposes of this discussion, being eligible for the 2017 PQRS payment adjustment) in the PQRS in 2015 for purposes of meeting the criteria for satisfactory reporting (or, in lieu of satisfactory reporting, satisfactory participation in a QCDR) for the 2017 PQRS payment adjustment.

Historically, the PQRS has never experienced 100 percent participation in reporting for the PQRS. Therefore, we believe that although 1.2 million eligible professionals will be subject to the 2017 PQRS payment adjustment, not all eligible participants will actually report quality measures data for purposes of the 2017 PQRS payment adjustment. In this burden estimate, we will only provide burden estimates for the eligible professionals and group practices who attempt to submit quality measures data for purposes of the 2017 PQRS payment adjustment. In 2012, 435,871 eligible professionals (36 percent) eligible professionals (including those who belonged to group practices that reported under the GPRO and eligible professionals within an ACO that participated in the PQRS via the Shared Savings Program or Pioneer ACO Model) participated in the PQRS, Medicare Shared Savings Program, or Pioneer ACO Model.[24] We expect to see a significant increase in participation in reporting for the PQRS in 2015 than 2012 as eligible professionals were not subject to a PQRS payment adjustment in 2012. Last year, we estimated that we would see a 50 percent participation rate in 2015. We still believe that a 14 percent increase in participation from 2012 is reasonable in 2015. Therefore, we estimate that 50 percent of eligible professionals (or approximately 600,000 eligible professionals) will report quality measures data for purposes of the 2017 PQRS payment adjustment.

For participation in the PQRS using the claims-based reporting mechanism, according to the 2011 PQRS and eRx Experience Report, in 2011, 229,282 of the 320,422 eligible professionals (or 72 percent) of eligible professionals used the claims-based reporting mechanism. According to the 2012 Reporting Experience, 248,206 eligible professionals participated in the PQRS using the claims-based reporting mechanism in 2012.[25] Preliminary estimates show that 252,567 eligible professionals participated in the PQRS using the claims-based reporting mechanism in 2013.[26] According to the historical data cited above, although the claims-based reporting mechanism is still the most widely-used reporting mechanism, we are seeing a decline in the use of the claims-based reporting mechanism in the PQRS. Although these eligible professionals continue to participate in the PQRS, these eligible professionals have started to shift towards the use of other reporting mechanisms—mainly the GPRO web interface (whether used by a PQRS GPRO or an ACO participating in the PQRS via the Medicare Shared Savings Program or Pioneer ACO model), registry, or the EHR-based reporting mechanisms. For purposes of this burden estimate, based on PQRS participation using the claims-based reporting mechanism in 2012 and 2013, we will assume that approximately 250,000 eligible professionals will participate in the PQRS using the claims-based reporting mechanism.

For participation in the PQRS using a qualified registry or QCDR, in 2011, approximately 50,215 (or 16 percent) of the 320,422 eligible professionals participating in PQRS used the qualified registry-based reporting mechanism. According to the 2012 Reporting Experience, 36,473 eligible professionals reported individual measures via the registry-based reporting mechanism, and 10,478 eligible professionals reporting measures groups via the registry-based reporting mechanism in 2012.[27] Therefore, approximately 47,000 eligible professionals participated in the PQRS using the registry-based reporting mechanism in 2012. Please note that we currently have no data on participation in the PQRS via a QCDR as 2014 is the first year in which an eligible professional may participate in the PQRS via a QCDR. We believe that the rest of the eligible professionals not participating in other PQRS reporting mechanisms will use either the registry or QCDR reporting mechanisms for the following reasons: (1) The PQRS measures set is moving away from use of claims-based measures and moving towards the use of registry-based measures; or (2) we believe the number of QCDR vendors will increase as the QCDR reporting mechanism evolves. Therefore, based on these assumptions, we expect to see a significant jump from 47,000 eligible professionals to approximately 165,000 eligible professionals using either the registry-based reporting mechanism or QCDR in 2015. We believe the majority of these eligible professionals will participate in the PQRS using a QCDR, as we presume QCDRs will be larger entities with more members.

For participation in the PQRS using the EHR-based reporting mechanism, according to the 2011 PQRS and eRx Experience Report, in 2011, 560 (or less than 1 percent) of the 320,422 eligible professionals participating in PQRS used the EHR-based reporting mechanism. 2012 saw a sharp increase in reporting via the EHR-based reporting mechanism. Specifically, according to the 2012 Reporting Experience, in 2012, 19,817 eligible professionals submitted quality data for the PQRS through a qualified EHR.[28] We believe the number of eligible professionals and group practices using the EHR-based reporting mechanism will steadily increase as

[23] Centers for Medicare and Medicaid Services, *2012 Reporting Experience Including Trends (2007–2013): Physician Quality Reporting System and Electronic Prescribing (eRx) Incentive Program,* March 14, 2014 at xiii.

[24] Id. at XV.

[25] *Id.* at xvi. *See* Figure 4.

[26] *Id.*

[27] *Id.* at xvi. *See* Figure 4.

[28] *Id.* at xv.

eligible professionals become more familiar with EHR products and more eligible professionals participate in programs encouraging use of an EHR, such as the EHR Incentive Program. In particular, we believe eligible professionals will transition from using the claims-based to the EHR-based reporting mechanisms. To account for this anticipated increase, we continue to estimate that approximately 50,000 eligible professionals, whether participating as an individual or part of a group practice under the GPRO, would use the EHR-based reporting mechanism in CY 2015.

For participation in the PQRS using the GPRO web interface, as we noted in last year's estimate, according to the 2011 Experience Report, approximately 200 group practices participated in the GPRO in 2011. According to the 2012 Reporting Experience, 66 practices participated in the PQRS GPRO.[29] In addition, 144 ACOs participated in the PQRS GPRO through either the Medicare Shared Savings Program (112 ACOs) or Pioneer ACO Model (32 practices).[30] These group practices encompass 134,510 eligible professionals (or approximately 140,000 eligible professionals).[31] Since it seems that roughly 200 group practices participated in the GPRO in 2011 and 2012, based on these numbers, we will assume that 200 group practices (accounting for approximately 135,000 eligible professionals) will participate in the PQRS using the GPRO web interface in 2015.

Please note that, while we are proposing the reporting of CAHPS survey measures using a CMS-certified survey vendor, we are not including this reporting mechanism in this impact statement as we believe that eligible professionals wishing to report CAHPS survey measures will do so for purposes other than the PQRS.

(a) Assumptions for Burden Estimates

For the PQRS, the burden associated with the requirements of this voluntary reporting initiative is the time and effort associated with individual eligible professionals identifying applicable quality measures for which they can report the necessary information, selecting a reporting option, and reporting the information on their selected measures or measures group to CMS using their selected reporting option.

We believe the labor associated with eligible professionals and group practices reporting quality measures data in the PQRS is primarily handled by an eligible professional's or group practice's billing clerk or computer analyst trained to report quality measures data. Therefore, we will consider the hourly wage of a billing clerk and computer analyst in our estimates. For purposes of this burden estimate, we will assume that a billing clerk will handle the administrative duties associated with participating in the PQRS. According to information published by the Bureau of Labor Statistics, available at *http://www.bls.gov/oes/2013/may/oes433021.htm*, the mean hourly wage for a billing clerk is approximately $16.80/hour. Therefore, for purposes of handling administrative duties, we estimate an average labor cost of $16.00/hour. In addition, for purposes of this burden estimate, we will assume that a computer analyst will engage in the duties associated with the reporting of quality measures. According to information published by the Bureau of Labor Statistics, available at *http://www.bls.gov/oes/2013/may/oes151121.htm*, the mean hourly wage for a computer analyst is approximately $41.00/hour. Therefore, for purposes of reporting on quality measures, we estimate an average labor cost of $41.00/hour.

For individual eligible professionals, the burden associated with the requirements of this reporting initiative is the time and effort associated with eligible professionals identifying applicable quality measures for which they can report the necessary information, collecting the necessary information, and reporting the information needed to report the eligible professional's measures. We believe it is difficult to accurately quantify the burden because eligible professionals may have different processes for integrating the PQRS into their practice's work flows. Moreover, the time needed for an eligible professional to review the quality measures and other information, select measures applicable to his or her patients and the services he or she furnishes to them, and incorporate the use of quality data codes into the office work flows is expected to vary along with the number of measures that are potentially applicable to a given professional's practice. Since eligible professionals are generally required to report on at least 9 measures covering at least 3 National Quality Strategy domains criteria for satisfactory reporting (or, in lieu of satisfactory reporting, satisfactory participation in a QCDR) for the 2017 PQRS payment adjustment, we will assume that each eligible professional reports on an average of 9 measures for this burden analysis.

For eligible professionals who are participating in PQRS for the first time, we will assign 5 total hours as the amount of time needed for an eligible professional's billing clerk to review the PQRS Measures List, review the various reporting options, select the most appropriate reporting option, identify the applicable measures or measures groups for which they can report the necessary information, review the measure specifications for the selected measures or measures groups, and incorporate reporting of the selected measures or measures groups into the office work flows. The measures list contains the measure title and brief summary information for the eligible professional to review. Assuming the eligible professional has received no training from his/her specialty society, we estimate it will take an eligible professional's billing clerk up to 2 hours to review this list, review the reporting options, and select a reporting option and measures on which to report. If an eligible professional has received training, then we believe this would take less time. We believe 3 hours is plenty of time for an eligible professional to review the measure specifications of 9 measures or 1 measures group they select to report for purposes of participating in PQRS and to develop a mechanism for incorporating reporting of the selected measures or measures group into the office work flows. Therefore, we believe that the start-up cost for an eligible professional to report PQRS quality measures data is 5 hours × $16/hour = $80.

We believe the burden associated with actually reporting the quality measures will vary depending on the reporting mechanism selected by the eligible professional. As such, we break down the burden estimates by eligible professionals and group practices participating in the GPRO according to the reporting mechanism used.

(b) Burden Estimate for PQRS Reporting by Individual Eligible Professionals and Group Practices: Claims-Based Reporting Mechanism

For the claims-based reporting option, eligible professionals must gather the required information, select the appropriate quality data codes (QDCs), and include the appropriate QDCs on the claims they submit for payment. The PQRS will collects QDCs as additional (optional) line items on the existing HIPAA transaction 837–P and/or CMS

[29] *Id.* at xv.

[30] *Id.* at xvi.

[31] *Id.* at 18.

Form 1500 (OCN: 0938–0999). We do not anticipate any new forms and or any modifications to the existing transaction or form. We also do not anticipate changes to the 837–P or CMS Form 1500 for CY 2015.

We estimate the cost for an eligible professional to review the list of quality measures or measures groups, identify the applicable measures or measures group for which they can report the necessary information, incorporate reporting of the selected measures into the office work flows, and select a PQRS reporting option to be approximately $205 per eligible professional ($41 per hour × 5 hours).

Based on our experience with the Physician Voluntary Reporting Program (PVRP), we continue to estimate that the time needed to perform all the steps necessary to report each measure (that is, reporting the relevant quality data code(s) for 9 measures measure) would range from 15 seconds (0.25 minutes) to over 12 minutes for complicated cases and/or measures, with the median time being 1.75 minutes. To report 9 measures, we estimate that it would take approximately 2.25 minutes to 108 minutes to perform all the steps necessary to report 9 measures.

Per measure, at an average labor cost of $41/hour per practice, the cost associated with this burden will range from $0.17 in labor to about $8.20 in labor time for more complicated cases and/or measures, with the cost for the median practice being $1.20. To report 9 measures, using an average labor cost of $41/hour, we estimated that the time cost of reporting for an eligible professional via claims would range from $1.53 (2.25 minutes or 0.0375 hours × $41/hour) to $73.80 (108 minutes or 1.8 hours × $41/hour) per reported case.

The total estimated annual burden for this requirement will also vary along with the volume of claims on which quality data is reported. In previous years, when we required reporting on 80 percent of eligible cases for claims-based reporting, we found that on average, the median number of reporting instances for each of the PQRS measures was 9. Since we reduced the required reporting rate by over one-third to 50 percent, then for purposes of this burden analysis we will assume that an eligible professional or eligible professional in a group practice will need to report each selected measure for 6 reporting instances. The actual number of cases on which an eligible professional or group practice is required to report quality measures data will vary, however, with the eligible professional's or group practice's patient population and the types of measures on which the eligible professional or group practice chooses to report (each measure's specifications includes a required reporting frequency).

Based on the assumptions discussed previously, we estimate the total annual reporting burden per individual eligible professional associated with claims-based reporting will range from 13.5 minutes (0.25 minutes per measure × 9 measures × 6 cases per measure) to 648 minutes (12 minutes per measure × 9 measures × 6 cases per measure), with the burden to the median practice being 94.5 minutes (1.75 minutes per measure × 9 measures × 6 cases). We estimate the total annual reporting cost per eligible professional or eligible professional in a group practice associated with claims-based reporting will range from $9.18 ($0.17 per measure × 9 measures × 6 cases per measure) to $442.80 ($8.20 per measure × 9 measures × 6 cases per measure), with the cost to the median practice being $64.58 per eligible professional ($1.20 per measure × 9 measures × 6 cases per measure).

(c) Burden Estimate for PQRS Reporting by Individual Eligible Professionals and Group Practices: Qualified Registry-Based and QCDR-Based Reporting Mechanisms

For qualified registry-based and QCDR-based reporting, there will be no additional time burden for eligible professionals or group practices to report data to a qualified registry as eligible professionals and group practices opting for qualified registry-based reporting or use of a QCDR will more than likely already be reporting data to the qualified registry for other purposes and the qualified registry will merely be re-packaging the data for use in the PQRS. Little, if any, additional data will need to be reported to the qualified registry or QCDR solely for purposes of participation in the PQRS. However, eligible professionals and group practices will need to authorize or instruct the qualified registry or QCDR to submit quality measures results and numerator and denominator data on quality measures to CMS on their behalf. We estimate that the time and effort associated with this will be approximately 5 minutes per eligible professional or eligible professional within a group practice.

Based on the assumptions discussed above and in Part B of this supporting statement, Table 62 provides an estimate of the total annual burden hours and total annual cost burden associated with eligible professionals using the qualified registry-based or QCDR-based reporting mechanism. Please note that, unlike the claims-based reporting mechanism that would require an eligible professional to report data to us on quality measures on multiple occasions, an eligible professional would not be required to submit this data to us, as the qualified registry or QCDR would perform this function on the eligible professional's behalf.

(d) Burden Estimate for PQRS Reporting by Individual Eligible Professionals and Group Practices: EHR-Based Reporting Mechanism

For EHR-based reporting, which includes EHR reporting via a direct EHR product and an EHR data submission vendor's product, the eligible professional or group practice must review the quality measures on which we will be accepting PQRS data extracted from EHRs, select the appropriate quality measures, extract the necessary clinical data from his or her EHR, and submit the necessary data to the our designated clinical data warehouse.

For EHR-based reporting for the PQRS, the individual eligible professional or group practice may either submit the quality measures data directly to us from their EHR or utilize an EHR data submission vendor to submit the data to us on the eligible professional's or group practice's behalf. To submit data to us directly from their EHR, the eligible professional or eligible professional in a group practice must have access to our specified identity management system, such as IACS, which we believe takes less than 1 hour to obtain. Once an eligible professional or eligible professional in a group practice has an account for our specified identity management system, he or she will need to extract the necessary clinical data from his or her EHR, and submit the necessary data to the our designated clinical data warehouse. With respect to submitting the actual data file for the respective reporting period, we believe that this will take an eligible professional or group practice no more than 2 hours, depending on the number of patients on which the eligible professional or group practice is submitting. We believe that once the EHR is programmed by the vendor to allow data submission to us, the burden to the eligible professional or group practice associated with submission of data on quality measures should be minimal as all of the information required to report the measure should already reside in the eligible professional's or group practice's EHR.

(e) Burden Estimate for PQRS Reporting by Group Practices Using the GPRO Web Interface

With respect to the process for group practices to be treated as satisfactorily submitting quality measures data under the PQRS, group practices interested in participating in the PQRS through the group practice reporting option (GPRO) must complete a self-nomination process similar to the self-nomination process required of qualified registries. However, since a group practice using the GPRO web interface would not need to determine which measures to report under PQRS, we believe that the self-nomination process is handled by a group practice's administrative staff. Therefore, we estimate that the self-nomination process for the group practices for the PQRS involves approximately 2 hours per group practice to review the PQRS GPRO and make the decision to participate as a group rather than individually and an additional 2 hours per group practice to draft the letter of intent for self-nomination, gather the requested TIN and NPI information, and provide this requested information. It is estimated that each self-nominated entity will also spend 2 hours undergoing the vetting process with CMS officials. We assume that the group practice staff involved in the group practice self-nomination process has an average practice labor cost of $16 per hour. Therefore, assuming the total burden hours per group practice associated with the group practice self-nomination process is 6 hours, we estimate the total cost to a group practice associated with the group practice self-nomination process to be approximately $96 ($16 per hour × 6 hours per group practice).

The burden associated with the group practice reporting requirements under the GPRO is the time and effort associated with the group practice submitting the quality measures data. For physician group practices, this would be the time associated with the physician group completing the web interface. We estimate that the time and effort associated with using the GPRO web interface will be comparable to the time and effort associated to using the PAT. As stated above, the information collection components of the PAT have been reviewed by OMB and was approved under OMB control number 0938–0941—Form 10136, with an expiration date of December 31, 2011 for use in the PGP, MCMP, and EHR demonstrations. As the GPRO was only recently implemented in 2010, it is difficult to determine the time and effort associated with the group practice submitting the quality measures data. As such, we will use the same burden estimate for group practices participating in the GPRO as we use for group practices participating in the PGP, MCMP, and EHR demonstrations. Since these changes will not have any impact on the information collection requirements associated with the PAT and we will be using the same data submission process used in the PGP demonstration, we estimate that the burden associated with a group practice completing data for PQRS under the web interface will be the same as for the group practice to complete the PAT for the PGP demonstration. In other words, we estimate that, on average, it will take each group practice 79 hours to submit quality measures data via the GPRO web interface at a cost of $40 per hour. Therefore, the total estimated annual cost per group practice is estimated to be approximately $3,160.

Tables 62 and 63 provide our total estimated costs for reporting in the PQRS for the 2017 PQRS payment adjustment, the reporting periods of which occur in CY 2015.

TABLE 62—SUMMARY OF BURDEN ESTIMATES FOR ELIGIBLE PROFESSIONALS AND/OR GROUP PRACTICES USING THE CLAIMS, QUALIFIED REGISTRY, AND EHR-BASED REPORTING MECHANISMS

	Minimum burden estimate	Maximum burden estimate
Estimated Annual Burden Hours for Claims-based Reporting (for individual eligible professionals only)	1,201,543	3,633,006.40
Estimated Annual Burden for Qualified registry-based or QCDR-based Reporting	1,333,695	1,333,695
Estimated Annual Burden Hours for EHR-based Reporting	450,000	450,000
Estimated Total Annual Burden Hours for Eligible Professionals or Eligible Professionals in a Group Practice	2,985,238	5,416,701.40
Estimated Cost for Claims-based Reporting (for individual eligible professionals only)	$53,545,000	$161,875,000
Estimated Cost for Qualified registry-based Reporting	$54,681,495	$54,681,495
Estimated Cost for EHR-based Reporting	$16,400,000	$16,400,000
Estimated Total Annual Cost for Eligible Professionals or Eligible Professionals in a Group Practice	$124,626,495	$232,956,495

TABLE 63—ESTIMATED COSTS PER VENDOR TO PARTICIPATE IN THE PQRS

	Maximum burden estimate
Estimated # of Participating Group Practices	200
Estimated # of Burden Hours Per Group Practice to Self-Nominate to Participate in PQRS and the Electronic Prescribing Incentive Program Under the Group Practice Reporting Option	6
Estimated # of Burden Hours Per Group Practice to Report Quality Measures	79
Estimated Total Annual Burden Hours Per Group Practice	85
Estimated Total Annual Burden Hours for Group Practices	17,000
Estimated Cost Per Group Practice to Self-Nominate to Participate in PQRS for the Group Practice Reporting Option	$96
Estimated Cost Per Group Practice to Report Quality Measures	$3,160
Estimated Total Annual Cost Per Group Practice	$3,256
Annual Burden Cost for Group Practices	$651,200

11. EHR Incentive Program

The changes to the EHR Incentive Program in section III.L of this proposed rule would not impact CY 2015 physician payments under the PFS.

12. Medicare Shared Saving Program

The requirements for participating in the Medicare Shared Saving Program

and the impacts of these requirements were established in the final rule implementing the Medicare Shared Savings Program that appeared in the **Federal Register** on November 2, 2011 (76 FR 67802). The proposals for the Medicare Shared Savings Program set forth in the CY 2015 MPFS proposed rule revisit the current quality performance standard, propose changes to the quality measures, propose modifications to the timeframe between updates to the quality performance benchmarks, and propose to establish an additional incentive to reward ACO quality improvement. Since the proposed policies are not expected to increase the quality reporting burden for ACOs participating in the Shared Savings Program and their ACO participants, there is no impact for these proposals.

13. Value-Based Payment Modifier and the Physician Feedback Program

Section 1848(p) of the Act requires that we establish a VM and apply it to specific physicians and groups of physicians the Secretary determines appropriate starting January 1, 2015 and to all physicians and groups of physicians by January 1, 2017. Section 1848(p)(4)(C) of the Act requires the VM to be budget neutral. Budget-neutrality means that, in aggregate, the increased payments to high performing physicians and groups of physicians equal the reduced payments to low performing physicians and groups of physicians.

The proposed changes to the VM in section III.N of this proposed rule would not impact CY 2015 physician payments under the PFS. We finalized the VM policies that would impact the CY 2015 physician payments under the PFS in the CY 2013 PFS final rule with comment period (77 FR 69306–69326).

In the CY 2013 PFS final rule with comment period, we finalized policies to phase-in the VM by applying it starting January 1, 2015 to payments under the Medicare PFS for physicians in groups of 100 or more eligible professionals. We identify a group of physicians as a single taxpayer identification number (TIN). We apply the VM to the items and services billed by physicians under the TIN, not to other eligible professionals that also may bill under the TIN. We established CY 2013 as the performance period for the VM that will be applied to payments during CY 2015 (77 FR 69314). We also finalized that we will not apply the VM in CYs 2015 and 2016 to any group of physicians that is participating in the Medicare Shared Savings Program, the Pioneer ACO Model, or the Comprehensive Primary Care Initiative, or other similar Innovation Center or CMS initiatives (77 FR 69313).

We finalized policies to determine the amount of the VM for CY 2015 by categorizing groups of physicians with 100 or more eligible professionals into two categories. Category 1 includes groups of physicians that either (a) self-nominate for the PQRS as a group and report at least one measure or (b) elect the PQRS Administrative Claims option as a group. Category 2 includes groups that do not fall within either of the two subcategories (a) or (b) of Category 1. Groups within Category 1 may elect to have their VM for CY 2015 calculated using the quality-tiering methodology, which could result in an upward, neutral, or downward adjustment amount. The VM for groups of physicians in Category 1 that do not elect-quality tiering is 0.0 percent, meaning that these groups will not receive a payment adjustment under the VM for CY 2015. Category 2 includes groups that do not fall within either of the two subcategories (a) or (b) of Category 1. For the groups that are in Category 2, the VM for the CY 2015 payment adjustment period is −1.0 percent.

Under the quality-tiering approach, each group's quality and cost composites are classified into high, average, and low categories depending upon whether the composites are at least one standard deviation above or below the mean. We compare the group's quality of care composite classification with the cost composite classification to determine the VM adjustment for the CY 2015 payment adjustment period according to the amounts in Table 64.

TABLE 64—2015 VALUE-BASED PAYMENT MODIFIER AMOUNTS UNDER QUALITY-TIERING

Cost/quality	Low quality	Average quality	High quality
Low Cost	+0.0%	*+1.0x	*+2.0x
Average Cost	−0.5%	+0.0%	*+1.0x
High Cost	−1.0%	−0.5%	+0.0%

* Groups of physicians eligible for an additional +1.0x if (1) reporting Physician Quality Reporting System quality measures through the GPRO Web-interface or CMS-qualified registry, and (2) average beneficiary risk score is in the top 25 percent of all beneficiary risk scores.

To ensure budget neutrality, we first aggregate the downward payment adjustments in Table 64 for those groups in Category 1 that have elected quality tiering with the -1.0 percent downward payment adjustments for groups of physicians subject to the VM that fall within Category 2. Using the aggregate downward payment adjustment amount, we then calculate the upward payment adjustment factor (x). These calculations will be done after the performance period has ended.

At the time of this proposed rule, we have not completed the analysis of the impact of the VM in CY 2015 on physicians in groups with 100 or more eligible professionals based on their performance in CY 2013. Therefore, in this proposed rule, we present estimates based on CY 2012 claims data that were used to produce the 2012 QRURs, which were available to groups of 25 or more eligible professionals on September 16, 2013. The findings from the CY 2012 QRURs will be available on the CMS Web site at *http://www.cms.gov/Medicare/Medicare-Fee-for-Service-Payment/PhysicianFeedbackProgram/2012–QRUR.html* in a document titled ''Experience Report for the Performance Year 2012 Quality and Resource Use Reports''. We will update this section in the CY 2015 final rule with comment period based on CY 2013 data that will be used to calculate the value-based payment modifier in CY 2015. The impact of the policies for the CY 2017 VM proposed in this rule, if finalized, would be discussed in the PFS rule for CY 2017.

Please note that we are not able to determine which groups would fall in Category 1 and Category 2, as described above, using CY 2012 claims data. Therefore, the 2012 estimates that we present in this section are based on groups for which we produced a 2012 QRUR and for whom the quality or cost composite could be calculated. Based on our simulation of the 1,032 groups with 100 or more eligible professionals for which we produced a 2012 QRUR and for whom the quality or cost composite could be calculated, the vast majority of groups (81.0 percent) are in the average quality and average cost tiers (this

includes groups missing either the quality or cost composite score, who are assigned to average quality or average cost). The simulation also found that approximately 8 percent of groups are in tiers that would receive an upward adjustment, resulting in a payment incentive of between +1.0x and +2.0x percent; and approximately 10.4 percent of groups are in tiers that would receive a downward adjustment of between -0.5 and -1.0 percent to payments under Medicare PFS (Table 65).

TABLE 65—SIMULATED DISTRIBUTION USING 2012 DATA OF QUALITY AND COST TIERS FOR GROUPS WITH 100 OR MORE ELIGIBLE PROFESSIONALS FOR WHICH A QUALITY OR COST COMPOSITE SCORE COULD BE CALCULATED (1,032 GROUPS)

Cost/quality	Low quality (percent)	Average quality (percent)	High quality (percent)
Low Cost	0.5	3.3	0.7
Average Cost	4.4	81.0	4.0
High Cost	3.6	2.4	0.2

In 2013, 136 groups with 100 or more eligible professionals elected to have their CY 2015 VM calculated using the quality-tiering methodology; therefore, these groups will receive an upward, neutral, or downward adjustment based on the calculation of their quality and cost composites. The VM for groups with 100 or more eligible professionals that did not elect quality tiering and self-nominated for the PQRS as a group and reported at least one measure or elected the PQRS administrative claims option will be 0.0 percent, meaning that these groups will not receive a payment adjustment under the VM in CY 2015.

Please note that in CY 2015, only the physicians in groups with 100 or more eligible professionals that are in Category 1 and elect quality-tiering will be subject to upward, downward, or no payment adjustment under the VM according to Table 64. Additionally, physicians in groups with 100 or more eligible professionals that fall in Category 2 will be subject to the -1.0 percent value-modifier payment adjustment in CY 2015. In the CY 2015 final rule with comment period, we will present the actual number of groups and physicians that will be subject to the VM in CY 2015.

G. Alternatives Considered

This proposed rule contains a range of policies, including some provisions related to specific statutory provisions. The preceding preamble provides descriptions of the statutory provisions that are addressed, identifies those policies when discretion has been exercised, presents rationale for our final policies and, where relevant, alternatives that were considered.

H. Impact on Beneficiaries

There are a number of changes in this proposed rule that would have an effect on beneficiaries. In general, we believe that many of the proposed changes, including the refinements of the PQRS with its focus on measuring, submitting, and analyzing quality data; establishing the basis for the VM to adjust physician payment beginning in CY 2015; improved accuracy in payment through revisions to the inputs used to calculate payments under the PFS and the five year review of MPRVUs; and revisions to payment for Part B drugs will have a positive impact and improve the quality and value of care provided to Medicare beneficiaries.

Most of the aforementioned proposed policy changes could result in a change in beneficiary liability as relates to coinsurance (which is 20 percent of the fee schedule amount if applicable for the particular provision after the beneficiary has met the deductible). To illustrate this point, as shown in Table 61, the CY 2014 national payment amount in the nonfacility setting for CPT code 99203 (Office/outpatient visit, new) is $77.02, which means that in CY 2014 a beneficiary would be responsible for 20 percent of this amount, or $15.40. Based on this proposed rule, using the current (CY 2014) CF of $35.8228, adjusted to $35.7997 to include budget neutrality, the CY 2015 national payment amount in the nonfacility setting for CPT code 99203, as shown in Table 61, is $77.32, which means that, in CY 2015, the proposed beneficiary coinsurance for this service would be $15.46.

In section II.H, we propose to define colorectal cancer screening to include the anesthesia associated with the procedure. If this proposal is adopted, there would be no beneficiary coinsurance or deductible applied to anesthesia associated with screening colonoscopy even when the anesthesia is furnished by a different practitioner than the one who furnishes the procedure.

I. Accounting Statement

As required by OMB Circular A–4 (available at *http://www.whitehouse.gov/omb/circulars/a004/a-4.pdf*), in Table 66 (Accounting Statement), we have prepared an accounting statement. This estimate includes growth in incurred benefits from CY 2014 to CY 2015 based on the FY 2015 President's Budget baseline. Note that subsequent legislation changed the updates for 2015 from those shown in the 2015 President's Budget baseline.

TABLE 66—ACCOUNTING STATEMENT: CLASSIFICATION OF ESTIMATED EXPENDITURES

Category	Transfers
CY 2015 Annualized Monetized Transfers	Estimated decrease in expenditures of $1.1 billion for PFS CF update.
From Whom To Whom?	Federal Government to physicians, other practitioners and providers and suppliers who receive payment under Medicare.
CY 2015 Annualized Monetized Transfers	Estimated increase in payment of $234 million.
From Whom To Whom?	Federal Government to eligible professionals who satisfactorily participate in the Physician Quality Reporting System (PQRS).

TABLE 67—ACCOUNTING STATEMENT: CLASSIFICATION OF ESTIMATED COSTS, TRANSFER, AND SAVINGS

Category	Transfers
CY 2015 Annualized Monetized Transfers of beneficiary cost coinsurance.	$9 million.
From Whom to Whom?	Federal Government to Beneficiaries.

J. Conclusion

The analysis in the previous sections, together with the remainder of this preamble, provides an initial ''Regulatory Flexibility Analysis.'' The previous analysis, together with the preceding portion of this preamble, provides a Regulatory Impact Analysis.

In accordance with the provisions of Executive Order 12866, this regulation was reviewed by the Office of Management and Budget.

List of Subjects

42 CFR Part 403

Grant programs-health, Health insurance, Hospitals, Intergovernmental relations, Medicare, Reporting and recordkeeping requirements.

42 CFR Part 405

Administrative practice and procedure, Health facilities, Health professions, Kidney diseases, Medical devices, Medicare, Reporting and recordkeeping requirements, Rural areas, X-rays.

42 CFR Part 410

Health facilities, Health professions, Kidney diseases, Laboratories, Medicare, Reporting and recordkeeping requirements, Rural areas, X-rays.

42 CFR Part 414

Administrative practice and procedure, Health facilities, Health professions, Kidney diseases, Medicare, Reporting and recordkeeping requirements.

42 CFR Part 425

Administrative practice and procedure, Health facilities, Health professions, Medicare, Reporting and recordkeeping requirements.

42 CFR Part 498

Administrative practice and procedure, Health facilities, Health professions, Medicare, Reporting and recordkeeping requirements.

For the reasons set forth in the preamble, the Centers for Medicare & Medicaid Services proposes to amend 42 CFR chapter IV as set forth below:

PART 403—SPECIAL PROGRAMS AND PROJECTS

■ 1. The authority citation for part 403 continues to read as follows:

Authority: 42 U.S.C. 1395b–3 and Secs. 1102 and 1871 of the Social Security Act (42 U.S.C. 1302 and 1395hh).

§ 403.902 [Amended]

■ 2. Section 403.902 is amended by removing the definition of ''Covered device''.

■ 3. Section 403.904 is amended by—

■ a. Revising paragraphs (c)(8) and (d)(3) and (4).

■ b. Adding paragraphs (d)(5) and (6).

■ c. Removing paragraph (g).

■ d. Redesignating paragraphs (h) and (i) as paragraphs (g) and (h), respectively.

The revisions and additions read as follows:

§ 403.904 Reports of payments or other transfers of value to covered recipients.

* * * * *

(c) * * *

(8) *Related covered and non-covered drug, device, biological or medical supply.* Report the marketed name of the related covered and non-covered drugs, devices, biologicals, or medical supplies, unless the payment or other transfer of value is not related to a particular covered or non-covered drug, device, biological or medical supply.

(i) For drugs and biologicals, if the marketed name has not yet been selected, applicable manufacturers must indicate the name registered on clinicaltrials.gov.

(ii) For devices and medical supplies, applicable manufacturers may also report the therapeutic area or product category for the device or medical supply.

(iii) Applicable manufacturers must indicate if the related drug, device, biological, or medical supply is covered or non-covered.

(iv) Applicable manufacturers must indicate if the payment or other transfer of value is not related to any covered or non-covered drug, device, biological or medical supply.

* * * * *

(d) * * *

(3) Stock.

(4) Stock option.

(5) Any other ownership interest.

(6) Dividend, profit or other return on investment.

* * * * *

■ 4. New subparts J and K are added to part 403 to read as follows:

Subpart J—[Reserved]

Subpart K—Access to Identifiable Data for the Center for Medicare and Medicaid Models

Sec.
403.1100 Purpose and scope.
403.1105 Definitions.
403.1110 Evaluation of models.

Subpart J—[Reserved]

Subpart K—Access to Identifiable Data for the Center for Medicare and Medicaid Models

§ 403.1100 Purpose and scope.

The regulations in this subpart implement section 1115A of the Act. The intent of that section is to enable CMS to test innovative payment and service delivery models to reduce program expenditures while preserving and/or enhancing the quality of care furnished to individuals under titles XVIII, XIX, and XXI of the Act. The Secretary is also required to conduct an evaluation of each model tested.

§ 403.1105 Definitions.

For purposes of this subpart—

Applicable title means titles XVIII, XIX, or XXI of the Act.

§ 403.1110 Evaluation of models.

(a) *Evaluation.* The Secretary conducts an evaluation of each model tested under section 1115A of the Act. Such evaluation must include an analysis of the following:

(1) The quality of care furnished under the model, including the measurement of patient-level outcomes and patient-centeredness criteria determined appropriate by the Secretary.

(2) The changes in spending under the applicable titles by reason of the model.

(b) *Information.* Any State or other entity participating in the testing of a model under section 1115A of the Act must collect and report such information, including ''protected health information'' as that term is defined at 45 CFR 160.103, as the

Secretary determines is necessary to monitor and evaluate such model. Such data must be produced to the Secretary at the time and in the form and manner specified by the Secretary.

PART 405—FEDERAL HEALTH INSURANCE FOR THE AGED AND DISABLED

■ 5. The authority citation for part 405 continues to read as follows:

Authority: Secs. 205(a), 1102, 1861, 1862(a), 1869, 1871, 1874, 1881, and 1886(k) of the Social Security Act (42 U.S.C. 405(a), 1302, 1395x, 1395y(a), 1395ff, 1395hh, 1395kk, 1395rr and 1395ww(k)), and sec. 353 of the Public Health Service Act (42 U.S.C. 263a).

■ 6. Section 405.400 is amended by revising the definition of ''Emergency care services'' to read as follows:

§ 405.400 Definitions.

* * * * *

Emergency care services means ''emergency services'' as that term is defined in § 424.101 of this chapter.

* * * * *

§ 405.420 [Amended]

■ 7. Section 405.420 is amended in paragraph (e) by removing the phrase ''Medicare+Choice'' and adding in its place the phrase ''Medicare Advantage''.

§ 405.425 [Amended]

■ 8. Section 405.425 is amended in paragraph (a) by removing the phrase ''Medicare+Choice'' and adding in its place the phrase ''Medicare Advantage''.

§ 405.450 [Amended]

■ 9. Section 405.450 is amended by—

■ a. In paragraph (a) removing the reference ''405.803'' and adding in its place the reference ''498.3(b)''.

■ b. In paragraph (b) removing the reference ''405.803'' and adding in its place ''405.924''.

§ 405.455 [Amended]

■ 10. Section 405.455 is amended by—

■ a. In the section heading removing the phrase ''Medicare+Choice'' and adding in its place the phrase ''Medicare Advantage''.

■ b. In the introductory text removing the phrase ''Medicare+Choice (M+C)'' and adding in its place the phrase ''Medicare Advantage''.

■ 11. Section 405.924 is amended by adding paragraph (b)(15) to read as follows:

§ 405.924 Actions that are initial determinations.

* * * * *

(b) * * *

(15) A claim not payable to a beneficiary for the services of a physician who has opted-out.

* * * * *

■ 12. Section 405.2413 is amended by—

■ a. In paragraph (a)(4) removing '';'' and adding in its place ''; and''.

■ b. Revising paragraph (a)(5).

■ c. Removing paragraph (a)(6).

■ The revision reads as follow:

§ 405.2413 Services and supplies incident to a physician's services.

(a) * * *

(5) Furnished under the direct supervision of a physician.

* * * * *

■ 13. Section 405.2415 is amended by—

■ a. Revising the section heading and paragraph (a)(5).

■ b. In paragraph (a)(4) removing '';'' and adding in its place ''; and''.

■ c. Removing paragraph (a)(6).

The revision reads as follows:

§ 405.2415 Services and supplies incident to nurse practitioner, physician assistant, or certified nurse-midwife services.

(a) * * *

(5) Furnished under the direct supervision of a nurse practitioner, physician assistant, or certified nurse-midwife.

* * * * *

■ 14. Section 405.2452 is amended by—

■ a. In paragraph (a)(4) removing '';'' and adding in its place ''; and''.

■ b. Revising paragraph (a)(5).

■ c. Removing paragraph (a)(6).

The revision reads as follows:

§ 405.2452 Services and supplies incident to clinical psychologist and clinical social worker services.

(a) * * *

(5) Furnished under the direct supervision of a clinical psychologist or clinical social worker.

* * * * *

PART 410—SUPPLEMENTARY MEDICAL INSURANCE (SMI) BENEFITS

■ 15. The authority citation for part 410 continues to read as follows:

Authority: Secs. 1102, 1834, 1871, 1881, and 1893 of the Social Security Act (42 U.S.C. 1302. 1395m, 1395hh, and 1395ddd.

■ 16. Section 410.26 is amended by revising paragraphs (b)(5) and (6) to read as follows:

§ 410.26 Services and supplies incident to a physician's professional services: Conditions.

* * * * *

(b) * * *

(5) In general, services and supplies must be furnished under the direct supervision of the physician (or other practitioner). Services and supplies furnished incident to transitional care management and chronic care management services can be furnished under general supervision of the physician (or other practitioner) when these services or supplies are provided by clinical staff. The physician (or other practitioner) supervising the auxiliary personnel need not be the same physician (or other practitioner) upon whose professional service the incident to service is based.

(6) Services and supplies must be furnished by the physician, practitioner with an incident to benefit, or auxiliary personnel.

* * * * *

■ 17. Section 410.37 is amended by revising paragraph (a)(1)(iii) to read as follows:

§ 410.37 Colorectal cancer screening tests: Conditions for and limitations on coverage.

(a) * * *

(1) * * *

(iii) Screening colonoscopies, including anesthesia furnished in conjunction with the service.

* * * * *

■ 18. Section 410.59 is amended by revising paragraph (c)(1)(ii) to read as follows:

§ 410.59 Outpatient occupational therapy services: Conditions.

* * * * *

(c) * * *

(1) * * *

(ii) Engage in the private practice of occupational therapy on a regular basis as an individual, in one of the following practice types: A solo practice, partnership, or group practice; or as an employee of one of these.

* * * * *

■ 19. Section 410.60 is amended by revising paragraph (c)(1)(ii) to read as follows:

§ 410.60 Outpatient physical therapy services: Conditions.

* * * * *

(c) * * *

(1) * * *

(ii) Engage in the private practice of physical therapy on a regular basis as an individual, in one of the following practice types: A solo practice, partnership, or group practice; or as an employee of one of these.

* * * * *

■ 20. Section 410.62 is amended by revising paragraph (c)(1)(ii) to read as follows:

§ 410.62 Outpatient speech-language pathology services: Conditions and exclusions.

* * * * *

(c) * * *

(1) * * *

(ii) Engage in the private practice of speech-language pathology on a regular basis as an individual, in one of the following practice types: A solo practice, partnership, or group practice; or as an employee of one of these.

* * * * *

■ 21. Section 410.78 is amended by revising paragraph (b) introductory text and paragraph (f) to read as follows:

§ 410.78 Telehealth services.

* * * * *

(b) *General rule.* Medicare Part B pays for covered telehealth services included on the telehealth list when furnished by an interactive telecommunications system if the following conditions are met:

* * * * *

(f) *Process for adding or deleting services.* Changes to the list of Medicare telehealth services are made through the annual physician fee schedule rulemaking process. A list of the services covered as telehealth services under this section is available on the CMS Web site.

PART 414—PAYMENT FOR PART B MEDICAL AND OTHER HEALTH SERVICES

■ 22. The authority citation for part 414 continues to read as follows:

Authority: Secs. 1102, 1871, and 1881(b)(l) of the Social Security Act (42 U.S.C. 1302, 1395hh, and 1395rr(b)(l)).

■ 23. Section 414.24 is amended by—

■ a. Revising the section heading and paragraphs (a) and (b).

■ b. Redesignating paragraph (c) as paragraph (d).

■ c. Adding new paragraph (c).

The revisions and addition read as follows:

§ 414.24 Publication of RVUs and direct PE inputs.

(a) *Definitions.* For purposes of this section, the following definitions apply:

Existing code means a code that is not a new code under paragraph (c)(2) of this section, and includes codes for which the descriptor is revised and codes that are combinations or subdivisions of previously existing codes.

New code means a code that describes a service that was not previously described or valued under the PFS using any other code or combination of codes.

(b) *Revisions of RVUs and direct PE Inputs.* CMS publishes, through notice and comment rulemaking in the **Federal Register** (including proposals in a proposed rule), changes in RVUs or direct PE inputs for existing codes.

(c) *Establishing RVUs and direct PE inputs for new codes.* (1) *General rule.* CMS establishes RVUs and direct PE inputs for new codes in the manner described in paragraph (b) of this section.

(2) *Exception for new codes for which CMS does not have sufficient information.* When CMS determines for a new code that it does not have sufficient information in order to include proposed RVUs or direct PE inputs in the proposed rule, but that it is in the public interest for Medicare to use a new code during a payment year, CMS will publish in the **Federal Register** RVUs and direct PE inputs that are applicable on an interim basis subject to public comment. After considering public comments and other information on interim RVUs and PE inputs for the new code, CMS publishes in the **Federal Register** the final RVUs and PE inputs for the code.

* * * * *

■ 24. Section 414.90 is amended by—

■ a. Removing the phrase ''CG CAHPS'' and adding in its place the phrase ''CAHPS for PQRS'' everywhere it appears.

■ b. Removing the phrase ''CAHPS'' and adding in its place the phrase ''CAHPS for PQRS'' everywhere it appears.

■ c. In paragraph (b) revising the definition of ''Measures group''.

■ d. Revising paragraphs (j)(4) and (m)(1) and (3).

■ e. Adding paragraphs (j)(6) and (k)(4).

The revisions read as follows:

§ 414.90 Physician Quality Reporting System (PQRS).

* * * * *

(b) * * *

Measures group means a subset of six or more PQRS measures that have a particular clinical condition or focus in common. The denominator definition and coding of the measures group identifies the condition or focus that is shared across the measures within a particular measures group.

* * * * *

(j) * * *

(4) *Satisfactory reporting criteria for individual eligible professionals for the 2017 PQRS payment adjustment.* An individual eligible professional who wishes to meet the criteria for satisfactory reporting for the 2017 PQRS payment adjustment must report information on PQRS quality measures identified by CMS in one of the following manners:

(i) *Via claims.* (A) For the 12-month 2017 PQRS payment adjustment reporting period—

(*1*)(*i*) Report at least 9 measures, covering at least 3 of the NQS domains and report each measure for at least 50 percent of the eligible professional's Medicare Part B FFS patients seen during the reporting period to which the measure applies. Of the 9 measures reported, if the eligible professional sees at least 1 Medicare patient in a face-to-face encounter, the eligible professional must report on at least 2 measures contained in the proposed cross-cutting measure set specified by CMS. If less than 9 measures apply to the eligible professional, report up to 8 measures and report each measure for at least 50 percent of the Medicare Part B FFS patients seen during the reporting period to which the measure applies. Of the measures reported, if the eligible professional sees at least 1 Medicare patient in a face-to-face encounter, the eligible professional must report on at least 2 measures contained in the cross-cutting measure set. Measures with a 0 percent performance rate would not be counted.

(*ii*) [Reserved]

(*2*) [Reserved]

(*B*) [Reserved]

(ii) *Via qualified registry.* (A) For the 12-month 2017 PQRS payment adjustment reporting period—

(*1*)(*i*) Report at least 9 measures, covering at least 3 of the NQS domains and report each measure for at least 50 percent of the eligible professional's Medicare Part B FFS patients seen during the reporting period to which the measure applies. Of the 9 measures reported, if the eligible professional sees at least 1 Medicare patient in a face-to-face encounter, the eligible professional must report on at least 2 measures contained in the proposed cross-cutting measure set specified by CMS. If less than 9 measures apply to the eligible professional, report up to 8 measures and report each measure for at least 50 percent of the Medicare Part B FFS patients seen during the reporting period to which the measure applies. Of the measures reported, if the eligible professional sees at least 1 Medicare patient in a face-to-face encounter, the eligible professional must report on at least 2 measures contained in the cross-cutting measure set.

(*ii*) Report at least 1 measures group and report each measures group for at least 20 patients, a majority of which much be Medicare Part B FFS patients.

(*2*) Measures with a 0 percent performance rate or measures groups containing a measure with a 0 percent performance rate will not be counted.

(*B*) [Reserved]

(iii) *Via EHR direct product*. For the 12-month 2017 PQRS payment adjustment reporting period, report 9 measures covering at least 3 of the NQS domains. If an eligible professional's CEHRT does not contain patient data for at least 9 measures covering at least 3 domains, then the eligible professional must report the measures for which there is Medicare patient data. An eligible professional must report on at least 1 measure for which there is Medicare patient data.

(iv) *Via EHR data submission vendor*. For the 12-month 2017 PQRS payment adjustment reporting period, report 9 measures covering at least 3 of the NQS domains. If an eligible professional's CEHRT does not contain patient data for at least 9 measures covering at least 3 domains, then the eligible professional must report the measures for which there is Medicare patient data. An eligible professional must report on at least 1 measure for which there is Medicare patient data.

* * * * *

(6) *Satisfactory reporting criteria for group practices for the 2017 PQRS payment adjustment*. A group practice who wishes to meet the criteria for satisfactory reporting for the 2017 PQRS payment adjustment must report information on PQRS quality measures identified by CMS in one of the following manners:

(i) *Via the GPRO Web interface*. For the 12-month 2017 PQRS payment adjustment reporting period, for a group practice of 25 or more eligible professionals, report on all measures included in the Web interface and populate data fields for the first 248 consecutively ranked and assigned beneficiaries in the order in which they appear in the group's sample for each module or preventive care measure. If the pool of eligible assigned beneficiaries is less than 248, then report on 100 percent of assigned beneficiaries. A group practice must report on at least 1 measure for which there is Medicare patient data.

(ii) *Via qualified registry*. For a group practice of 2 or more eligible professionals, for the 12-month 2017 PQRS payment adjustment reporting period, report at least 9 measures, covering at least 3 of the NQS domains and report each measure for at least 50 percent of the group practice's Medicare Part B FFS patients seen during the reporting period to which the measure applies; or if less than 9 measures covering at least 3 NQS domains apply to the eligible professional, then the group practice must report up to measures for which there is Medicare patient data and report each measure for at least 50 percent of the group practice's Medicare Part B FFS patients seen during the reporting period to which the measure applies. Of the measures reported, if the eligible professional sees at least 1 Medicare patient in a face-to-face encounter, the eligible professional must report on at least 2 measures contained in the cross-cutting measure set. Measures with a 0 percent performance rate would not be counted; or

(iii) *Via EHR direct product*. For a group practice of 2 or more eligible professionals, for the 12-month 2017 PQRS payment adjustment reporting period, report 9 measures covering at least 3 of the NQS domains. If a group practice's CEHRT does not contain patient data for at least 9 measures covering at least 3 domains, then the group practice must report the measures for which there is Medicare patient data. A group practice must report on at least 1 measure for which there is Medicare patient data.

(iv) *Via EHR data submission vendor*. For a group practice of 2 or more eligible professionals, for the 12-month 2017 PQRS payment adjustment reporting period, report 9 measures covering at least 3 of the NQS domains. If a group practice's CEHRT does not contain patient data for at least 9 measures covering at least 3 domains, then the group practice must report the measures for which there is Medicare patient data. A group practice must report on at least 1 measure for which there is Medicare patient data.

(v) *Via a certified survey vendor in addition to a qualified registry*. For a group practice of 25 or more eligible professionals, for the 12-month 2017 PQRS payment adjustment reporting period, report all CAHPS for PQRS survey measures via a CMS-certified survey vendor and report at least 6 additional measures covering at least 2 of the NQS domains using a qualified registry. If less than 6 measures apply to the group practice, the group practice must report up to 6 measures. Of these 6 measures, if any eligible professional in the group practice sees at least 1 Medicare patient in a face-to-face encounter, the group practice must report on at least 1 measure in the cross-cutting measure set.

(vi) *Via a certified survey vendor in addition a direct EHR product or EHR data submission vendor*. For a group practice of 25 or more eligible professionals, for the 12-month 2017 PQRS payment adjustment reporting period, report all CAHPS for PQRS survey measures via a CMS-certified survey vendor and report at least 6 additional measures, outside of CAHPS for PQRS, covering at least 2 of the NQS domains using the direct EHR product that is CEHRT or EHR data submission vendor that is CEHRT. If less than 6 measures apply to the group practice, the group practice must report up to 6 measures. Of the additional 6 measures that must be reported in conjunction with reporting the CAHPS for PQRS survey measures, a group practice would be required to report on at least 1 measure for which there is Medicare patient data.

(vii) *Via a certified survey vendor in addition to the GPRO Web interface*. (A) For a group practice of 25 to 99 eligible professionals, for the 12-month 2017 PQRS payment adjustment reporting period, report all CAHPS for PQRS survey measures via a CMS-certified survey vendor and report on all measures included in the GPRO Web interface; AND populate data fields for the first 248 consecutively ranked and assigned beneficiaries in the order in which they appear in the group's sample for each module or preventive care measure. If the pool of eligible assigned beneficiaries is less than 248, then the group practice would report on 100 percent of assigned beneficiaries. A group practice would be required to report on at least 1 measure for which there is Medicare patient data.

(B) For a group practice of 100 or more eligible professionals, for the 12-month 2017 PQRS payment adjustment reporting period, report all CAHPS for PQRS survey measures via a certified survey vendor. In addition, the group practice would report on all measures included in the GPRO Web interface; AND populate data fields for the first 248 consecutively ranked and assigned beneficiaries in the order in which they appear in the group's sample for each module or preventive care measure. If the pool of eligible assigned beneficiaries is less than 248, then the group practice would report on 100 percent of assigned beneficiaries. A group practice would be required to report on at least 1 measure for which there is Medicare patient data.

(k) * * *

(4) *Satisfactory participation criteria for individual eligible professionals for the 2017 PQRS payment adjustment*. An individual eligible professional who wishes to meet the criteria for satisfactory participation in a QCDR for the 2017 PQRS payment adjustment must report information on quality measures identified by the QCDR in one of the following manner:

(i) For the 12-month 2017 PQRS payment adjustment reporting period,

report at least 9 measures available for reporting under a QCDR covering at least 3 of the NQS domains, and report each measure for at least 50 percent of the eligible professional's patients. Of these measures, report on at least 3 outcome measures, or, if 3 outcomes measures are not available, report on at least 2 outcome measures and at least 1 of the following types of measures—resource use, patient experience of care, or efficiency/appropriate use.

(ii) [Reserved]

* * * * *

(m) * * *

(1) To request an informal review for reporting periods that occur prior to 2014, an eligible professional or group practice must submit a request to CMS within 90 days of the release of the feedback reports. To request an informal review for reporting periods that occur in 2014 and subsequent years, an eligible professional or group practice must submit a request to CMS within 30 days of the release of the feedback reports. The request must be submitted in writing and summarize the concern(s) and reasons for requesting an informal review and may also include information to assist in the review.

* * * * *

(3) If, during the informal review process, CMS finds errors in data that was submitted using a third-party vendor using either the qualified registry, EHR data submission vendor, or QCDR reporting mechanisms, CMS may allow for the resubmission of data to correct these errors on an ad-hoc basis.

(i) CMS will not allow resubmission of data submitted via claims, direct EHR, and the GPRO Web interface reporting mechanisms.

(ii) CMS will only allow resubmission of data that was already previously submitted to CMS.

(iii) CMS will only accept data that was previously submitted for the reporting periods for which the corresponding informal review period applies.

* * * * *

§ 414.511 [Removed]

■ 25. Section 414.511 is removed.

■ 26. Section 414.610 is amended by revising paragraphs (c)(1)(ii) introductory text and (c)(5)(ii) to read as follows:

§ 414.610 Basis of payment.

* * * * *

(c) * * *

(1) * * *

(ii) For services furnished during the period July 1, 2008 through March 31, 2015, ambulance services originating in:

* * * * *

(5) * * *

(ii) For services furnished during the period July 1, 2004 through March 31, 2015, the payment amount for the ground ambulance base rate is increased by 22.6 percent where the point of pickup is in a rural area determined to be in the lowest 25 percent of rural population arrayed by population density. The amount of this increase is based on CMS's estimate of the ratio of the average cost per trip for the rural areas in the lowest quartile of population compared to the average cost per trip for the rural areas in the highest quartile of population. In making this estimate, CMS may use data provided by the GAO.

* * * * *

■ 27. Section 414.1200 is amended by revising paragraphs (a) and (b)(5) to read as follows:

§ 414.1200 Basis and scope.

(a) *Basis.* This subpart implements section 1848(p) of the Act by establishing a payment modifier that provides for differential payment starting in 2015 to a group of physicians and starting in 2017 to a group and a solo practitioner under the Medicare Physician Fee Schedule based on the quality of care furnished compared to cost during a performance period.

(b) * * *

(5) Additional measures for groups and solo practitioners.

* * * * *

■ 28. Section 414.1205 is amended by—

■ a. Revising the definitions of ''Group of physicians'' and ''Value-based payment modifier''.

■ b. Adding the definition of ''Solo practitioner'' in alphabetical order.

The addition and revisions read as follows:

§ 414.1205 Definitions.

* * * * *

Group of physicians (Group) means a single Taxpayer Identification Number (TIN) with 2 or more eligible professionals, as identified by their individual National Provider Identifier (NPI), who have reassigned their Medicare billing rights to the TIN.

* * * * *

Solo practitioner means a single TIN with 1 eligible professional as identified by an individual NPI billing under the TIN.

* * * * *

Value-based payment modifier means the percentage as determined under § 414.1270 by which amounts paid to a group or solo practitioner under the Medicare Physician Fee Schedule established under section 1848 of the Act are adjusted based upon a comparison of the quality of care furnished to cost as determined by this subpart.

■ 29. Section 414.1210 is amended by—

■ a. Adding paragraphs (a)(3) and (b)(2), (3), and (4).

■ b. Revising paragraph (c).

The additions and revision reads as follows:

§ 414.1210 Application of the value-based payment modifier.

(a) * * *

(3) For the CY 2017 payment adjustment period and each subsequent calendar year payment adjustment period, to physicians and eligible professionals in groups with 2 or more eligible professionals and to physicians and eligible professionals who are solo practitioners based on the performance period described at § 414.1215(c).

(b) * * *

(2) For the CY 2017 payment adjustment period and each subsequent payment adjustment period, the value-based payment modifier is applicable to physicians and eligible professionals in groups with 2 or more eligible professionals and to physicians and eligible professionals who are solo practitioners that participate in the Shared Savings Program. The value-based payment modifier for groups and solo practitioners that participate in the Shared Savings Program during the payment adjustment period is determined based on paragraphs (b)(2)(i) through (iv) of this section. For groups and solo practitioners that participate in the Shared Savings Program during the performance period, but do not participate in the Shared Savings Program during the payment adjustment period, the quality composite is classified as ''average'' under § 414.1275(b)(1) and the cost composite score is calculated under § 414.1260(b) based on performance on the cost measures identified under § 414.1235 during the performance period.

(i) The cost composite is classified as ''average'' under § 414.1275(b)(2) for the payment adjustment period.

(ii) The quality composite score is calculated under § 414.1260(a) using quality data from the ACO in which the groups and solo practitioners participate during the payment adjustment period, as collected under § 425.500 of this chapter for the performance period.

(iii) If the ACO did not exist during the performance period, then the quality composite for the groups and solo

practitioners is classified as ''average'' under § 414.1275(b)(1) for the payment adjustment period.

(iv) The same value-based payment modifier applies to all groups and solo practitioners participating in an ACO during the payment adjustment period.

(3) For the CY 2017 payment adjustment period and each subsequent payment adjustment period, the value-based payment modifier is applicable to physicians and eligible professionals in groups with 2 or more eligible professionals and to physicians and eligible professionals who are solo practitioners that participate in the Pioneer ACO Model or the Comprehensive Primary Care (CPC) Initiative during the performance period. The value-based payment modifier for groups and solo practitioners that participate in the Pioneer ACO Model or the CPC Initiative during the performance period and do not participate in the Shared Savings Program or other similar Innovation Center models or CMS initiatives during the payment adjustment period is determined based on paragraphs (b)(3)(i) through (iv) of this section.

(i) If a group reports under PQRS GPRO for the performance period and meets the criteria for satisfactory reporting for the PQRS payment adjustment, then the quality composite score is calculated under § 414.1260(a) based on the PQRS GPRO quality data, and the cost composite score is calculated under § 414.1260(b) based on performance on the cost measures identified under § 414.1235 during the performance period. If the group fails to meet the criteria for satisfactory reporting, then the group is in Category 2 and receives a downward adjustment under the value-based payment modifier for the payment adjustment period equal to the percentage applied for high cost/low quality under § 414.1275(c).

(ii) If a group is composed of one or more eligible professionals that participate in the Pioneer ACO Model or CPC Initiative and others who do not participate, and at least 50 percent of all eligible professionals in the group satisfactorily report quality data to CMS for the performance period, then the quality composite score is calculated under § 414.1260(a) based on the quality data reported under PQRS by individual eligible professionals in the group, and the group receives the higher of ''average quality'' or the actual classification under § 414.1275(b)(1), and the cost composite score is calculated under § 414.1260(b) based on performance on the cost measures identified under § 414.1235 during the performance period. If less than 50 percent of all eligible professionals in the group satisfactorily report quality data to CMS for the performance period, then the group is in Category 2 and receives a downward adjustment under the value-based payment modifier for the payment adjustment period equal to the percentage applied for high cost/low quality under § 414.1275(c).

(iii) If a group is composed entirely of eligible professionals that participate in the Pioneer ACO Model or CPC Initiative, and the group successfully reports quality data to the Pioneer ACO Model or CPC Initiative for the performance period, then the quality composite is classified as ''average'' under § 414.1275(b)(1), and the cost composite score is calculated under § 414.1260(b) based on performance on the cost measures identified under § 414.1235 during the performance period. If the group fails to successfully report quality data to the Pioneer ACO Model or the CPC Initiative for the performance period, then the group is in Category 2 and receives a downward adjustment under the value-based payment modifier for the payment adjustment period equal to the percentage applied for high cost/low quality under § 414.1275(c).

(iv) If a solo practitioner successfully reports quality data to the Pioneer ACO Model or CPC Initiative for the performance period, then the quality composite is classified as ''average'' under § 414.1275(b)(1), and the cost composite score is calculated under § 414.1260(b) based on performance on the cost measures identified under § 414.1235 during the performance period. If the solo practitioner fails to successfully report quality data to the Pioneer ACO Model or the CPC Initiative for the performance period, then the solo practitioner is in Category 2 and receives a downward adjustment under the value-based payment modifier for the payment adjustment period equal to the percentage applied for high cost/low quality under § 414.1275(c).

(v) For groups and solo practitioners that participate in the Pioneer ACO Model or the CPC Initiative during the performance period and participate in other similar Innovation Center models or CMS initiatives during the payment adjustment period (but not the Shared Savings Program), the quality composite is determined based on paragraphs (b)(3)(i) through (iv) of this section for the payment adjustment period. The cost composite is classified as ''average'' under § 414.1275(b)(2) for the payment adjustment period.

(4) For the CY 2017 payment adjustment period and each subsequent payment adjustment period, the value-based payment modifier is applicable to physicians and eligible professionals in groups with 2 or more eligible professionals and to physicians and eligible professionals who are solo practitioners that participate in other similar Innovation Center models or CMS initiatives during the performance period. The quality composite and cost composite are determined based on paragraphs (b)(3)(i) through (v) of this section.

(c) Group size determination. The list of groups of physicians subject to the value-based payment modifier for the CY 2015 payment adjustment period is based on a query of PECOS on October 15, 2013. For each subsequent calendar year payment adjustment period, the list of groups and solo practitioners subject to the value-based payment modifier is based on a query of PECOS that occurs within 10 days of the close of the Physician Quality Reporting System group registration process during the applicable performance period described at § 414.1215. Groups are removed from the PECOS-generated list if, based on a claims analysis, the group did not have the required number of eligible professionals, as defined in § 414.1210(a), that submitted claims during the performance period for the applicable calendar year payment adjustment period. Solo practitioners are removed from the PECOS-generated list if, based on a claims analysis, the solo practitioner did not submit claims during the performance period for the applicable calendar year payment adjustment period.

§ 414.1220 [Amended]

■ 30. Section 414.1220 is amended by removing the phrase ''Groups of physicians'' and adding in its place the phrase ''Solo practitioners and groups''.

■ 31. Section 414.1225 is revised to read as follows:

§ 414.1225 Alignment of Physician Quality Reporting System quality measures and quality measures for the value-based payment modifier.

All of the quality measures for which solo practitioners and groups (or individual eligible professionals within such groups) are eligible to report under the Physician Quality Reporting System in a given calendar year are used to calculate the value-based payment modifier for the applicable payment adjustment period, as defined in § 414.1215, to the extent a solo practitioner or a group (or individual eligible professionals within such group) submit data on such measures.

■ 32. Section 414.1230 is amended by revising the section heading and the introductory text to read as follows:

§ 414.1230 Additional measures for groups and solo practitioners.

The value-based payment modifier includes the following additional quality measures (outcome measures) as applicable for all groups and solo practitioners subject to the value-based payment modifier:

* * * * *

§ 414.1235 [Amended]

■ 33. Section 414.1235 is amended in paragraph (a) introductory text by removing the phrase ''of physicians subject'' and add in its place the phrase ''and solo practitioners subject''.

■ 34. Section 414.1240 is revised to read as follows:

§ 414.1240 Attribution for quality of care and cost measures.

(a) Beneficiaries are attributed to groups and solo practitioners subject to the value-based payment modifier using a method generally consistent with the method of assignment of beneficiaries under § 425.402 of this chapter, for measures other than the Medicare Spending per Beneficiary measure.

(b) For the Medicare Spending per Beneficiary (MSPB) measure, an MSPB episode is attributed to the group or the solo practitioner subject to the value-based payment modifier whose eligible professionals submitted the plurality of claims (as measured by allowable charges) under the group's or solo practitioner's TIN for Medicare Part B services, rendered during an inpatient hospitalization that is an index admission for the MSPB measure during the applicable performance period described at § 414.1215.

§ 414.1245 [Amended]

■ 35. Section 414.1245 is amended in the introductory text by removing the phrase ''of physicians subject'' and adding in its place the phrase ''and solo practitioner subject''.

■ 36. Section 414.1250 is amended by revising paragraph (a) to read as follows:

§ 414.1250 Benchmarks for quality of care measures.

(a) The benchmark for quality of care measures reported through the PQRS using the claims, registries, EHR, or web interface is the national mean for that measure's performance rate (regardless of the reporting mechanism) during the year prior to the performance period. In calculating the national benchmark, solo practitioners' and groups' (or individual eligible professionals' within such groups) performance rates are weighted by the number of beneficiaries used to calculate the solo practitioners' or groups' (or individual eligible professionals' within such groups) performance rate.

* * * * *

■ 37. Section 414.1255 is amended by revising paragraphs (b) and (c) to read as follows:

§ 414.1255 Benchmarks for cost measures.

* * * * *

(b) Beginning with the CY 2016 payment adjustment period, the cost measures of a group and solo practitioner subject to the value-based payment modifier are adjusted to account for the group's and solo practitioner's specialty mix, by computing the weighted average of the national specialty-specific expected costs. Each national specialty-specific expected cost is weighted by the proportion of each specialty in the group, the number of eligible professionals of each specialty in the group, and the number of beneficiaries attributed to the group.

(c) The national specialty-specific expected costs referenced in paragraph (b) of this section are derived by calculating, for each specialty, the average cost of beneficiaries attributed to groups and solo practitioners that include that specialty.

■ 38. Section 414.1265 is amended by—

■ a. In the introductory text, removing the phrase ''of physicians subject'' and add in its place the phrase ''or solo practitioner subject''.

■ b. Revising paragraph (a)

The addition reads as follows:

§ 414.1265 Reliability of measures.

* * * * *

(a) In a performance period, if a group or a solo practitioner has fewer than 20 cases for a measure, that measure is excluded from its domain and the remaining measures in the domain are given equal weight.

(1) Starting with the CY 2017 payment adjustment period, the exception to paragraph (a) of this section is the all-cause hospital readmission measure described at § 414.1230(c). In a performance period, if a group or a solo practitioner has fewer than 200 cases for this all-cause hospital readmission measure, that measure is excluded from its domain and the remaining measures in the domain are given equal weight.

(2) [Reserved]

* * * * *

■ 39. Section 414.1270 is amended by adding paragraph (c) to read as follows:

§ 414.1270 Determination and calculation of Value-Based Payment Modifier adjustments.

* * * * *

(c) For the CY 2017 payment adjustment period:

(1) A downward payment adjustment of −4.0 percent will be applied to a group and a solo practitioner subject to the value-based payment modifier if, during the applicable performance period as defined in § 414.1215, the following apply:

(i) Such group does not self-nominate for the PQRS GPRO and meet the criteria as a group to avoid the PQRS payment adjustment for CY 2017 as specified by CMS; and

(ii) Fifty percent of the eligible professionals in such group do not meet the criteria as individuals to avoid the PQRS payment adjustment for CY 2017 as specified by CMS; or

(iii) Such solo practitioner does not meet the criteria as an individual to avoid the PQRS payment adjustment for CY 2017 as specified by CMS.

(2) For a group comprised of 10 or more eligible professionals that is not included in paragraph (c)(1) of this section, the value-based payment modifier adjustment will be equal to the amount determined under § 414.1275(c)(3).

(3) For a group comprised of between 2 and 9 eligible professionals and a solo practitioner that are not included in paragraph (c)(1) of this section, the value-based payment modifier adjustment will be equal to the amount determined under § 414.1275(c)(3), except that such adjustment will be 0.0 percent if the group and the solo practitioner are determined to be low quality/high cost, low quality/average cost, or average quality/high cost.

(4) If all of the eligible professionals in a group and a solo practitioner subject to the value-based payment modifier participate as individuals in the PQRS using a qualified clinical data registry or any other reporting mechanism available to them, and CMS is unable to receive quality performance data for those eligible professionals and the solo practitioner under that reporting mechanism, the quality composite score for such group and solo practitioner will be classified as ''average'' under § 414.1275(b)(1).

(5) A group and a solo practitioner subject to the value-based payment modifier will receive a cost composite score that is classified as ''average'' under § 414.1275(b)(2) if such group and solo practitioner do not have at least one cost measure with at least 20 cases.

■ 40. Section 414.1275 is amended by—

■ a. Revising paragraph (a).

■ b. Redesignating paragraphs (d), (d)(1), and (d)(2) as paragraphs (d)(1), (d)(1)(i), and (d)(1)(ii), respectively.

■ c. Adding paragraphs (c)(3) and (d)(2).

The revision and additions read as follows:

§ 414.1275 Value-based payment modifier quality-tiering scoring methodology.

(a) The value-based payment modifier amount for a group and a solo practitioner subject to the value-based payment modifier is based upon a comparison of the composite of quality of care measures and a composite of cost measures.

* * * * *

(c) * * *

(3) The following value-based payment modifier percentages apply to the CY 2017 payment adjustment period:

CY 2017—VALUE-BASED PAYMENT MODIFIER AMOUNTS FOR THE QUALITY-TIERING APPROACH

Cost/quality	Low quality (percent)	Average quality	High quality
Low Cost	+0.0	*+2.0x	*+4.0x
Average Cost	-2.0	+0.0%	*+2.0x
High Cost	-4.0	-2.0%	+0.0%

*Groups and solo practitioners eligible for an additional +1.0x if reporting Physician Quality Reporting System quality measures and average beneficiary risk score is in the top 25 percent of all beneficiary risk scores.

(d) * * *

(2) Groups and solo practitioners subject to the value-based payment modifier that have an attributed beneficiary population with an average risk score in the top 25 percent of the risk scores of beneficiaries nationwide and for the CY 2017 payment adjustment period are subject to the quality-tiering approach, receive a greater upward payment adjustment as follows:

(i) Classified as high quality/low cost receive an upward adjustment of +5x (rather than +4x); and

(ii) Classified as either high quality/average cost or average quality/low cost receive an upward adjustment of +3x (rather than +2x).

§ 414.1285 [Amended]

■ 41. Section 414.1285 is amended by removing the phrase ''of physicians may'' and adding in its place the phrase ''and a solo practitioner may''.

PART 425—MEDICARE SHARED SAVINGS PROGRAM

■ 42. The authority citation for part 425 continues to read as follows:

Authority: Secs. 1102, 1106, 1871, and 1899 of the Social Security Act (42 U.S.C. 1302 and 1395hh).

■ 43. Section 425.502 is amended by—

■ a. In paragraph (a)(1), removing the phrase ''of an ACO's agreement, CMS'' and adding in its place the phrase ''of an ACO's first agreement period, CMS''

■ b. In paragraph (b)(2)(ii), removing the phrase ''80.00 percent.'' and adding in its place the phrase ''80.00 percent, or when the 90th percentile is equal to or greater than 95%.''

■ c. Revising paragraph (a)(2).

■ d. Adding paragraphs (a)(3) and (4), (b)(4), and (e)(4).

The revision and additions read as follows:

§ 425.502 Calculating the ACO quality performance score.

(a) * * *

(2) During subsequent performance years of the ACO's first agreement period, the quality performance standard will be phased in such that the ACO must continue to report all measures but the ACO will be assessed on performance based on the quality performance benchmark and minimum attainment level of certain measures.

(3) Under the quality performance standard for each performance year of an ACO's subsequent agreement period, the ACO must continue to report on all measures but the ACO will be assessed on performance based on the quality performance benchmark and minimum attainment level of certain measures.

(4) The quality performance standard for a measure introduced during an ACO's agreement period is set at the level of complete and accurate reporting for the first performance year for which reporting of the measure is required. For subsequent performance years, the quality performance standard for the measure will be assessed according to the phase-in schedule for the measure.

(b) * * *

(4) (i) CMS will update the quality performance benchmarks every 2 years.

(ii) For measures introduced in the first year of the 2-year benchmarking cycle, the benchmark will be established in the second year and updated along with the other measures at the start of the next 2-year benchmarking cycle.

* * * * *

(e) * * *

(4) (i) ACOs that demonstrate quality improvement on established quality measures from year to year will be eligible for up to 2 bonus points per domain.

(ii) Bonus points are awarded based on an ACO's net improvement in measures within a domain, which is calculated by determining the total number of significantly improved measures and subtracting the total number of significantly declined measures.

(iii) Up to two bonus points are awarded based on a comparison of the ACO's net improvement in performance on the measures for the domain to the total number of individual measures in the domain.

(iv) When bonus points are added to points earned for the quality measures in the domain, the total points received for the domain may not exceed the maximum total points for the domain in the absence of the quality improvement measure.

(v) If an ACO renews its participation agreement for a subsequent agreement period, quality improvement will be measured based on a comparison between performance in the first year of the new agreement period and performance in the third year of the previous agreement period.

■ 44. Section 425.506 is amended by revising the section heading and adding paragraph (d) to read as follows:

§ 425.506 Incorporating reporting requirements related to adoption of electronic health records technology.

* * * * *

(d) Eligible professionals participating in an ACO under the Shared Savings Program satisfy the CQM reporting component of meaningful use for the Medicare EHR Incentive Program when the following occurs:

(1) The eligible professional extracts data necessary for the ACO to satisfy the quality reporting requirements under this subpart from certified EHR technology.

(2) The ACO reports the ACO GPRO measures through a CMS web interface.

PART 498—APPEALS PROCEDURES FOR DETERMINATIONS THAT AFFECT PARTICIPATION IN THE MEDICARE PROGRAM AND FOR DETERMINATIONS THAT AFFECT THE PARTICIPATION OF ICFs/IID AND CERTAIN NFs IN THE MEDICAID PROGRAM

■ 45. The authority citation for part 498 continues to read as follows:

Authority: Secs. 1102, 1128I and 1871 of the Social Security Act (42 U.S.C. 1302, 1320a–7j, and 1395hh).

■ 46. Section 498.3 is amended by adding paragraph (b)(19) to read as follows:

§ 498.3 Scope and applicability.

* * * * *

(b) * * *

(19) Whether a physician or practitioner has failed to properly opt-out, failed to maintain opt-out, failed to timely renew opt-out, failed to privately contract, or failed to properly terminate opt-out.

* * * * *

Dated: June 13, 2014.

Marilyn Tavenner,

Administrator, Centers for Medicare & Medicaid Services.

Approved: June 19, 2014.

Sylvia M. Burwell,

Secretary, Department of Health and Human Services.

[FR Doc. 2014–15948 Filed 7–3–14; 4:15 pm]

BILLING CODE 4120–01–P

FEDERAL REGISTER

Vol. 79 Friday,

No. 133 July 11, 2014

Part IV

Department of Energy

10 CFR Parts 429, 430, and 431

Energy Conservation Program for Consumer Products and Certain Commercial and Industrial Equipment: Test Procedures for Residential and Commercial Water Heaters; Final Rule

DEPARTMENT OF ENERGY

10 CFR Parts 429, 430, and 431

[Docket No. EERE–2011–BT–TP–0042]

RIN 1904–AC53

Energy Conservation Program for Consumer Products and Certain Commercial and Industrial Equipment: Test Procedures for Residential and Commercial Water Heaters

AGENCY: Office of Energy Efficiency and Renewable Energy, Department of Energy.

ACTION: Final rule.

SUMMARY: On November 4, 2013, the U.S. Department of Energy (DOE) issued a notice of proposed rulemaking (NOPR) to amend its test procedures established under the Energy Policy and Conservation Act for residential water heaters and certain commercial water heaters, which serves as the basis for today's action. This rulemaking fulfills DOE's statutory obligation for residential and certain commercial water heaters to review its test procedure for covered products and equipment at least once every seven years. In addition, this rulemaking satisfies DOE's statutory obligation to develop a uniform efficiency descriptor for residential and commercial water heaters. The test method applies the same efficiency descriptor to all residential and certain commercial water heaters, and extends coverage to eliminate certain gaps in the current residential test procedure, updates the simulated-use-test draw pattern, and updates the outlet water temperature requirement.

DATES: The effective date of this rule is July 13, 2015. Compliance will be mandatory starting one year after the publication in the **Federal Register** of a mathematical conversion factor to convert from the existing efficiency ratings to efficiency ratings under the test procedure adopted by this final rule, or December 31, 2015, whichever is later.

The incorporation by reference of certain publications listed in this rule is approved by the Director of the Federal Register as of July 13, 2015. Other publications referenced were approved on March 23, 2009, and May 16, 2012.

ADDRESSES: The docket for this rulemaking is available for review at *www.regulations.gov,* including **Federal Register** notices, public meeting attendee lists and transcripts, comments, and other supporting documents/materials. All documents in the docket are listed in the *www.regulations.gov index.* However, not all documents listed in the index may be publicly available, such as information that is exempt from public disclosure.

A link to the docket on the *www.regulations.gov* Web page can be found at: *http://www.regulations.gov/#!docketDetail;D=EERE-2011-BT-TP-0042.* The *www.regulations.gov* Web page contains simple instructions on how to access all documents, including public comments, in the docket.

For further information on how to review the docket, contact Ms. Brenda Edwards at (202) 586–2945 or by email: *Brenda.Edwards@ee.doe.gov.*

FOR FURTHER INFORMATION CONTACT: Ms. Ashley Armstrong, U.S. Department of Energy, Office of Energy Efficiency and Renewable Energy, Building Technologies Office, EE–5B, 1000 Independence Avenue SW., Washington, DC 20585–0121. Telephone: (202) 586–6590. Email: *Ashley.Armstrong@ee.doe.gov.*

Mr. Eric Stas, U.S. Department of Energy, Office of the General Counsel, GC–71, 1000 Independence Avenue SW., Washington, DC 20585–0121. Telephone: (202) 586–9507. Email: *Eric.Stas@hq.doe.gov.*

SUPPLEMENTARY INFORMATION: This final rule incorporates by reference the following industry standards into subpart B of 10 CFR part 430:

ASTM D2156–09, (''ASTM D2156''), Standard Test Method for Smoke Density in Flue Gases from Burning Distillate Fuels.

Copies of ASTM D2156–09 can be obtained from the American Society for Testing and Materials International, 100 Barr Harbor Drive, P.O. Box C700, West Conshohocken, PA 19428–2959, or go to *http://www.astm.org.*

Table of Contents

I. Authority and Background
II. Summary of the Final Rule
III. Discussion
A. Scope
1. Coverage Range of Uniform Metric and Test Procedure
2. Storage Capacity Limits
3. Input Capacity Limits
4. Electric Instantaneous Water Heaters, Gas-Fired Heat Pump Water Heaters, and Oil-Fired Instantaneous Water Heaters
B. Uniform Efficiency Descriptor Nomenclature
C. Draw Pattern
D. Instrumentation
E. Test Conditions
1. Outlet Water Temperature
2. Ambient Temperature and Relative Humidity
3. Laboratory Airflow
F. Storage Tank Pre-Conditioning
G. Operational Mode Selection
H. Annual Energy Consumption Calculation
I. Conversion of Existing Energy Factor Ratings
J. Full Fuel Cycle
K. Certification, Compliance, and Enforcement IssuesC
1. Storage Volume Requirements
2. First-Hour Rating and Maximum GPM Requirements
3. Ratings for Untested Models
L. Reference Standards
M. Compliance With Other EPCA Requirements
N. Other Issues
IV. Procedural Issues and Regulatory Review
A. Review Under Executive Order 12866
B. Review Under the Regulatory Flexibility Act
C. Review Under the Paperwork Reduction Act of 1995
D. Review Under the National Environmental Policy Act of 1969
E. Review Under Executive Order 13132
F. Review Under Executive Order 12988
G. Review Under the Unfunded Mandates Reform Act of 1995
H. Review Under the Treasury and General Government Appropriations Act, 1999
I. Review Under Executive Order 12630
J. Review Under Treasury and General Government Appropriations Act, 2001
K. Review Under Executive Order 13211
L. Review Under Section 32 of the Federal Energy Administration Act of 1974
M. Congressional Notification
V. Approval of the Office of the Secretary

I. Authority and Background

Title III, Part B [1] of the Energy Policy and Conservation Act of 1975 (''EPCA'' or ''the Act''), Public Law 94–163 (42 U.S.C. 6291–6309, as codified) sets forth a variety of provisions designed to improve energy efficiency and established the Energy Conservation Program for Consumer Products Other Than Automobiles.[2] These include residential water heaters, one subject of this rulemaking. (42 U.S.C. 6292(a)(4)) Title III, Part C [3] of EPCA, Public Law 94–163 (42 U.S.C. 6311–6317, as codified), added by Public Law 95–619, Title IV, Sec. 441(a), established the Energy Conservation Program for Certain Industrial Equipment, which includes the commercial water-heating equipment that is another subject of this rulemaking. (42 U.S.C. 6311(1)(K))

Under EPCA, energy conservation programs generally consist of four parts: (1) Testing; (2) labeling; (3) establishing Federal energy conservation standards; and (4) certification and enforcement procedures. The testing requirements

[1] For editorial reasons, upon codification in the U.S. Code, Part B was redesignated as Part A.

[2] All references to EPCA in this document refer to the statute as amended through the American Energy Manufacturing Technical Corrections Act (AEMTCA), Public Law 112–210 (Dec. 18, 2012).

[3] For editorial reasons, upon codification in the U.S. Code, Part C was redesignated Part A–1.

consist of test procedures that manufacturers of covered products and equipment must use as the basis for certifying to DOE that their products and equipment comply with the applicable energy conservation standards adopted pursuant to EPCA and for making other representations about the efficiency of those products. (42 U.S.C. 6293(c); 42 U.S.C. 6295(s); 42 U.S.C. 6314) Similarly, DOE must use these test requirements to determine whether the products comply with any relevant standards promulgated under EPCA. (42 U.S.C. 6295(s))

Under 42 U.S.C. 6293, EPCA sets forth the criteria and procedures that DOE must follow when prescribing or amending test procedures for residential water heaters. EPCA provides, in relevant part, that any test procedures prescribed or amended under this section must be reasonably designed to produce test results which measure energy efficiency, energy use, or estimated annual operating cost of a covered product during a representative average use cycle or period of use, and must not be unduly burdensome to conduct. (42 U.S.C. 6293(b)(3)) In addition, if DOE determines that a test procedure amendment is warranted, it must publish proposed test procedures and offer the public an opportunity to present oral and written comments on them. (42 U.S.C. 6293(b)(2))

For commercial water heaters, EPCA requires that if the test procedure referenced in the American Society of Heating, Refrigerating, and Air-Conditioning Engineers (ASHRAE) Standard 90.1, ''Energy Standard for Buildings Except Low-Rise Residential Buildings,'' is updated, DOE must amend its test procedure to be consistent with the updated test procedure unless DOE determines by rule published in the **Federal Register** and supported by clear and convincing evidence that the amended test procedure is not reasonably designed to produce test results which reflect the energy efficiency, energy use, or estimated operating costs of that type of ASHRAE equipment during a representative average use cycle. In addition, DOE must determine that the amended test procedure is not unduly burdensome to conduct. (42 U.S.C. 6314(a)(2) and (4))

In any rulemaking to amend a test procedure, DOE must determine to what extent, if any, the proposed test procedure would alter the product's measured energy efficiency. (42 U.S.C. 6293(e)(1)) If DOE determines that the amended test procedure would alter the measured efficiency of a covered product, DOE must amend the applicable energy conservation standard accordingly. (42 U.S.C. 6293(e)(2))

Further, the Energy Independence and Security Act of 2007 (EISA 2007) amended EPCA to require that DOE must review test procedures for all covered products at least once every seven years and either amend test procedures (if the Secretary determines that amended test procedures would more accurately or fully comply with the requirements of 42 U.S.C. 6293(b)(3) for residential products or 42 U.S.C. 6314(a)(2)–(3) for commercial equipment) or publish notice in the **Federal Register** of any determination not to amend a test procedure. (42 U.S.C. 6293(b)(1)(A); 42 U.S.C. 6314(a)(1)(A)) Under this requirement, DOE must review the test procedures for residential water heaters not later than December 19, 2014 (seven years after the enactment of EISA 2007), and DOE must review the test procedures for commercial water heaters not later than May 16, 2019 (*seven* years after the last final rule for commercial water heater test procedures [4]). The final rule resulting from this rulemaking will satisfy the requirement to review the test procedures for residential and certain commercial water heaters every seven years.

DOE's test procedure for residential water heaters is found in the Code of Federal Regulations (CFR) at 10 CFR 430.23(e) and 10 CFR part 430, subpart B, appendix E. The test procedure includes provisions for determining the energy efficiency (energy factor (EF)), as well as the annual energy consumption of these products. DOE's test procedure for commercial water heaters is found at 10 CFR 431.106. That test procedure incorporates by reference American National Standards Institute (ANSI) Z21.10.3, *Gas Water Heaters—Volume III, Storage Water Heaters With Input Ratings Above 75,000 Btu Per Hour, Circulating and Instantaneous,* and provides a method for determining the thermal efficiency and standby loss of this equipment.

In addition to the test procedure review provision discussed above, EISA 2007 also amended EPCA to require DOE to amend its test procedures for all covered consumer products to include measurement of standby mode and off mode energy consumption. (42 U.S.C. 6295(gg)(2)(A)) Consequently, DOE recently completed a rulemaking to consider amending its test procedure for residential water heaters to include provisions for measuring the standby mode and off mode energy consumption of those products. Pursuant to the requirements of EPCA, DOE published a notice of proposed rulemaking (NOPR) in the **Federal Register** on August 30, 2010, for three different residential heating products (water heaters, pool heaters, and direct heating equipment) related to standby mode and off mode energy consumption, but the NOPR proposed no amendments to the DOE test procedure for residential water heaters because DOE tentatively concluded that standby mode and off mode energy consumption was already accounted for in the existing DOE test method.[5] 75 FR 52892, 52895. Subsequently, DOE published a final rule in the **Federal Register** on December 17, 2012, which affirmed its conclusion that no changes were needed to the existing test procedure for residential water heaters. 77 FR 74559, 74561–62. However, that rulemaking was limited to consideration of test procedure amendments to address the above-referenced standby mode and off mode requirements; it did not address other issues regarding DOE's existing test procedure for residential water heaters. DOE addresses these issues in this final rule.

On October 12, 2011, DOE published in the **Federal Register** a request for information (RFI) that identified and requested comment on a number of issues regarding the test procedures for residential water heaters. 76 FR 63211. DOE accepted comments and information on the RFI until November 28, 2011. Key issues discussed in the RFI include the scope, draw patterns, and test conditions for residential water heaters. The RFI began the process of fulfilling DOE's obligation to periodically review its test procedures under 42 U.S.C. 6293(b)(1)(A) by initiating a rulemaking to examine all aspects of the DOE test procedure.

On December 18, 2012, the American Energy Manufacturing Technical Corrections Act (AEMTCA), Public Law 112–210, was signed into law. In relevant part, it amended EPCA to require that DOE publish a final rule establishing a uniform efficiency descriptor and accompanying test methods for covered residential water heaters and commercial water-heating equipment within one year of the enactment of AEMTCA. (42 U.S.C. 6295(e)(5)(B)) The final rule must replace the current energy factor, thermal efficiency, and standby loss metrics with a uniform efficiency

[4] On May 16, 2012, DOE published a final rule in the **Federal Register** amending the test procedures for commercial water heaters. 77 FR 28928.

[5] For more information, please visit DOE's Web site at: *http://www1.eere.energy.gov/buildings/appliance_standards/residential/waterheaters.html.*

descriptor. (42 U.S.C. 6295(e)(5)(C)) AEMTCA requires that, beginning one year after the date of publication of DOE's final rule establishing the uniform descriptor, the efficiency standards for covered water heaters must be denominated according to the uniform efficiency descriptor established in the final rule (42 U.S.C. 6295(e)(5)(D)), and that DOE must develop a mathematical factor for converting the measurement of efficiency for covered water heaters from the test procedures and metrics currently in effect to the new uniform energy descriptor. (42 U.S.C. 6295(e)(5)(E)(i)–(ii)) After the effective date of the final rule, covered water heaters shall be considered to comply with the final rule and with any revised labeling requirements established by the Federal Trade Commission (FTC) to carry out the final rule, if the covered water heater was manufactured prior to the effective date of the final rule and complies with the efficiency standards and labeling requirements in effect prior to the final rule. (42 U.S.C. 6295(e)(5)(K))

AEMTCA also requires that the uniform efficiency descriptor and accompanying test method apply, to the maximum extent practicable, to all water-heating technologies currently in use and to future water-heating technologies. (42 U.S.C. 6295(e)(5)(H)) AEMTCA allows DOE to provide an exclusion from the uniform efficiency descriptor for specific categories of otherwise covered water heaters that do not have residential uses, that can be clearly described, and that are effectively rated using the current thermal efficiency and standby loss descriptors. (42 U.S.C. 6295(e)(5)(F))

AEMTCA outlines DOE's various options for establishing a new uniform efficiency descriptor for water heaters, including: (1) A revised version of the energy factor descriptor currently in use; (2) the thermal efficiency and standby loss descriptors currently in use; (3) a revised version of the thermal efficiency and standby loss descriptors; (4) a hybrid of descriptors; or (5) a new approach. (42 U.S.C. 6295(e)(5)(G)) Lastly, AEMTCA requires that DOE invite stakeholders to participate in the rulemaking process, and that DOE contract with the National Institute of Standards and Technology (NIST), as necessary, to conduct testing and simulation of alternative descriptors identified for consideration. (42 U.S.C. 6295(e)(5)(I)–(J))

On January 11, 2013, DOE published in the **Federal Register** an RFI (hereinafter the ''January 2013 RFI'') that requested comment on its interpretation of the requirements for developing a uniform efficiency descriptor in AEMTCA. DOE also sought comment on how to implement those requirements. 78 FR 2340. DOE accepted comments and information on the RFI until February 11, 2013.

On November 4, 2013, DOE published a NOPR in the **Federal Register** (hereinafter the ''November 2013 NOPR'') regarding the test procedure for residential and certain commercial water heaters. DOE accepted comments and information on the NOPR until January 21, 2014. The November 2013 NOPR proposed to modify the current test procedures for residential water heaters and certain commercial water heaters to be more representative of conditions encountered in the field (including modifications to both the test conditions and the draw patterns) and to expand the scope of the test procedure to apply to certain commercial water heaters and certain residential water heaters that are not covered by the current test procedure. The proposal also included a number of other improvements identified by commenters in response to both the October 2011 RFI and the January 2013 RFI. On December 6, 2013, DOE held a public meeting to discuss the test procedure proposals outlined in the November 2013 NOPR. The feedback received from stakeholders was taken into consideration and is discussed further in section III of this final rule.

II. Summary of the Final Rule

Through this final rule, DOE amends its test procedure for residential water heaters and certain commercial water heaters. The amendments will modify the test procedure to be more representative of conditions encountered in the field (including modifications to the test conditions and the draw patterns) and expand the scope of the test procedure to apply to certain commercial water heaters and certain residential water heaters that are not covered by the current test procedure. The following paragraphs summarize these changes.

DOE also modifies the test procedure for water heaters to establish a uniform descriptor that can be applied to: (1) All residential water heaters (including certain residential water heaters that are covered products under EPCA's definition of ''water heater'' at 42 U.S.C. 6291(27), but that are not covered under the current test procedure); and (2) to certain commercial water heaters that have residential applications. These modifications include the establishment of test procedure provisions that are applicable to water heaters with storage volumes between 2 gallons (7.6 L) and 20 gallons (76 L), and the creation of a definition for ''electric instantaneous water heater.'' In addition, DOE establishes a new equipment class of commercial water heaters and corresponding definition for ''residential-duty commercial water heater.'' DOE will require water heaters that are classified as ''residential-duty commercial'' to be tested using the test procedure for the uniform efficiency descriptor established in this final rule.

In addition, DOE establishes the use of multiple draw patterns for testing water heaters, with certain draw patterns prescribed as a function of equipment capacity. Further, DOE establishes updates to the water heater draw pattern to be more reflective of actual field usage based on recent field test data. Lastly, DOE modifies the outlet water temperature requirement to better reflect conditions encountered in typical field installations.

III. Discussion

In response to the November 2013 NOPR, DOE received 24 written comments from the following interested parties: Thomas Harman, Seisco, Applied Energy Technology (AET), two separate comments from Heat Transfer Products, Inc. (HTP), the National Propane Gas Association (NPGA), Bradford White, A.O. Smith, Edison Electric Institute (EEI), a joint comment from Northwest Energy Efficiency Alliance (NEEA) and Northwest Power and Conservation Council (NPCC) (NEEA and NPCC), Sequentric Energy Systems, LLC (SES), Stone Mountain Technologies (SMT), six separate comments from Affiliated International Management, LLC (AIM), the American Gas Association (AGA), Rheem Manufacturing Company (Rheem), the Air-Conditioning, Heating, and Refrigeration Institute (AHRI), Giant Factories, Inc. (Giant), a joint comment submitted by the American Council for an Energy-Efficient Economy (ACEEE) (Joint Comment),[6] and General Electric Company (GE).

These interested parties commented on a range of issues, including those identified by DOE in the October 2011 RFI, the January 2013 RFI, and the November 2013 NOPR, as well as several other pertinent issues. The issues on which DOE received comment, as well as DOE's response to

[6] ACEEE submitted a joint comment on behalf of ACEEE, the Appliance Standards Awareness Project (ASAP), the Alliance to Save Energy (ASE), Consumers Union (CU), the National Consumer Law Center (NCLC), the Natural Resources Defense Council (NRDC), and the Northeast Energy Efficiency Partnership (NEEP).

those comments and the resulting changes to the test procedures for water heaters, are discussed in the subsections immediately below.

A. Scope

DOE's current test procedures for residential water heaters codified at 10 CFR 430.23(e) and 10 CFR part 430, subpart B, appendix E address gas-fired, electric, and oil-fired storage-type (*i.e.,* storage volume not less than 20 gallons (76 L)) and gas-fired and electric instantaneous type (*i.e.,* storage volume less than 2 gallons (7.6 L)) water heaters. However, the current DOE test procedure does not define ''electric instantaneous water heater.'' In addition, it does not address the following types of products: (1) Gas-fired water heaters that have a storage volume at or above 2 gallons and less than 20 gallons (76 L); (2) electric storage water heaters with storage volume less than 20 gallons (76 L); and (3) storage water heaters with very large storage capacities, including oil-fired water heaters with storage volumes greater than 50 gallons (190 L), gas-fired water heaters with storage volumes above 100 gallons (380 L), and electric water heaters with storage volumes above 120 gallons (450 L). In the NOPR, DOE proposed an expansion of the scope of coverage of its test method so that it applies to all products that meet the definition of residential water heater, including those products listed above that are not addressed by the existing DOE test method. 78 FR 66202, 66205 (Nov. 4, 2013). DOE also proposed revising 10 CFR 430.32(d) to clarify the applicability of the existing standards with respect to the expanded test procedure scope. *Id.* As discussed below, DOE adopts the proposed changes along with several clarifications based on comments received from interested parties.

DOE's test procedures for commercial water heaters are found at 10 CFR 431.106. In terms of capacity, the procedures for commercial water heaters cover storage water heaters with an input rating up to 4,000 British thermal units (Btu) per hour (Btu/h) per gallon of stored water, instantaneous water heaters with input ratings not less than 4,000 Btu/h per gallon of stored water, and hot water supply boilers with input ratings from 300,000 Btu/h to 12,500,000 Btu/h and of at least 4,000 Btu/h per gallon of stored water. Models using natural gas, oil, or electricity are covered by these test methods.

EPCA includes definitions for both residential and commercial water heaters that set the scope of DOE's authority for these products. (42 U.S.C. 6291(27); 42 U.S.C. 6311(12)) As required by AEMTCA, by this final rule, DOE establishes a uniform metric and test method for all covered water heaters,[7] regardless of whether a particular water heater falls under the scope of residential water heaters or commercial water heaters as defined in EPCA. In doing so, DOE also expands the scope of the test procedure to include test methods for certain product types that are not covered by the current DOE test procedure. DOE identified these topics as issues for comment in the October 2011 RFI, the January 2013 RFI, and the November 2013 NOPR. 76 FR 63211, 63212–13 (Oct. 12, 2011); 78 FR 2340, 2344–2346 (Jan. 11, 2013); 78 FR 66202, 66205–66224 (Nov. 4, 2013).

1. Coverage Range of Uniform Metric and Test Procedure

As proposed in the November 2013 NOPR, and in accordance with AEMTCA (42 U.S.C. 6295(e)(5)(F)), DOE excludes from the uniform efficiency descriptor any specific categories of covered water heaters that do not have a residential use, can be clearly described in the final rule, and are effectively rated using the current thermal efficiency and standby loss descriptors. In the November 2013 NOPR, DOE proposed to define a new classification of commercial water heaters for which the uniform efficiency descriptor would apply, which DOE believes can be clearly distinguished from the commercial water heaters for which the uniform descriptor would not apply under this final rule; DOE proposed to name the new classification ''light commercial water heater.'' 78 FR 66202, 66206 (Nov. 4, 2013). DOE received 4 comments on this proposal in response to the NOPR. AHRI, AIM, A.O. Smith, and NEEA and NPCC suggested that the proposed name could lead to confusion. (AHRI, No. 75 at p. 2; AIM, No. 67 at p. 1; A.O. Smith, No. 62 at p. 1; NEEA and NPCC No. 64 at p. 3).[8] Further, AHRI and A.O. Smith suggested that a more appropriate name for this product classification would be ''residential-duty water heater.'' (AHRI, No. 75 p. 2; A.O. Smith, No. 62 at p. 1) DOE considered this comment and agrees that ''light commercial'' is a term already used in industry and that using this term in this context could cause stakeholder and consumer confusion. Thus, DOE adopts a new name for the classification, as suggested by commenters, and creates a ''residential-duty'' commercial water heater classification.[9]

In the November 2013 NOPR, DOE proposed three characteristics to distinguish water heaters intended only for commercial use: (1) For models requiring electricity, uses three-phase power supply; (2) is capable of delivering hot water at temperatures of 180 °F or above; and/or (3) bears a Code Symbol Stamp signifying compliance with the requirements of the American Society of Mechanical Engineers (ASME) Boiler and Pressure Vessel Code. DOE did not propose input and storage capacity criteria to differentiate commercial water heaters that would only be used in non-residential applications from commercial water heaters that could have residential applications, given that changes to the input and storage capacity criteria would likely occur over time and require updating. 78 FR 66202, 66206–66207 (Nov. 4, 2013).

No comments were received opposing the proposal to exclude from the ''residential-duty commercial water heater'' classification any water heater which uses three-phase power, so DOE has decided to retain that characteristic in this final rule.

Five comments (AHRI, A.O. Smith, Bradford White, Giant, Joint Comment) requested that the language ''capable of delivering'' water at 180 °F or more should be changed to ''designed to deliver,'' given that the delivery temperature of a water heater is a result of the field conditions and usage. These commenters also pointed out that even a water heater that is not designed to deliver water at or above 180 °F might be capable of doing so. (AHRI, No. 75 at pp. 1–2; A.O. Smith, No. 62 at p. 5; Bradford White, No. 61 at pp. 2–3; Giant, No. 76 at p. 1; Joint Comment, No. 77 at p. 5)

Four commenters (AHRI, A.O. Smith, Giant, Joint Comment) stated that the ASME Boiler and Pressure Vessel Stamp is not required in all jurisdictions and would not adequately classify a water heater as a commercial water heater

[7] As provided by 42 U.S.C. 6295(e)(5)(F), DOE is excluding from the uniform efficiency descriptor certain commercial water heaters that do not have a residential use, can be clearly described in the final rule, and are effectively rated using the thermal efficiency and standby loss descriptors. The water heaters that DOE is excluding are discussed further in section III.A.1.

[8] All references to comments received in response to the November 2013 NOPR identify the commenter, the identification number applied by DOE, and the page of the comment package on which the particular point has been discussed.

[9] As discussed in the NOPR, DOE determined that the current metrics for commercial water heaters that are used only in commercial settings (*i.e.,* non-''residential-duty'' commercial water heaters) are appropriate and adequate to characterize the performance of such commercial water heaters due to the typical operating patterns of such equipment. 78 FR 66202, 66206 (Nov. 4, 2013).

without a residential application. (AHRI, No. 75 at p. 2; A.O. Smith, No. 62 at p. 4; Giant, No. 76 at p. 1; Joint Comment, No. 77 at p. 5)

Nine comments (AHRI, A.O. Smith, EEI, Giant, NEEA and NPCC, Joint Comment, Rheem, SMT, Seisco) suggested the addition of input and storage capacity criteria, stating that the three criteria listed above do not adequately distinguish water heaters not intended for residential use. (AHRI, No. 75 at p. 2; A.O. Smith, No. 62 at p. 4; EEI, No. 63 at p. 5; Giant, No. 76 at pp. 1–2; NEEA and NPCC, No. 64 at p. 3; Joint Comment, No. 77 at p. 4; Rheem, No. 69 at p. 2; SMT, No. 66 at p. 1; Seisco, No. 57 at p. 11) The suggested criteria are presented in Table III.1 and are grouped by water heater type.

TABLE III.1—SUGGESTED CAPACITY CRITERIA FOR DEFINING NON-RESIDENTIAL WATER HEATERS

Water heater type	Indicator of non-residential application by commenter
Gas-fired Storage	AHRI, A.O. Smith, Giant, Rheem: Rated input >100 kBtu/h; Rated storage volume >100 gallons.
Oil-fired Storage	AHRI, A.O. Smith, Giant, Rheem: Rated input >140 kBtu/h; Rated storage volume >50 gallons.
	NEEA and NPCC: Rated input >105 kBtu/h; Rated storage volume >120 gallons.
Electric Storage	AHRI, A.O. Smith, Giant, Rheem: Rated input >12kW; Rated storage volume >120 gallons.
	NEEA and NPCC: Rated input >12kW; Rated storage volume <2 gallons and >120 gallons.
Heat Pump with Storage.	AHRI, A.O. Smith, Giant, Rheem: Rated current >24 A at a rated voltage of not greater than 250 V; Rated storage volume >120 gallons.
	NEEA and NPCC; Rated Input >15 kW; Rated current >24 A at a rated voltage of not greater than 250 V; Rated storage volume >120 gallons.
Gas-fired Instantaneous.	AHRI, A.O. Smith, Giant, Rheem: Rated input >200 kBtu/h; Rated storage volume < 1 gallon per 4000 Btu/h of input.
	NEEA and NPCC: Rated input >200 kBtu/h; Rated storage volume <2 gallons.
Electric Instantaneous.	AHRI, A.O. Smith, Giant, Rheem: Rated input >25 kW; Rated storage volume >2 gallons.
	NEEA and NPCC: Rated input >58.6 kW; Rated storage volume >2 gallons.
	Siesco: Rated input >56 kW (at a minimum).
Oil-fired Instantaneous.	AHRI, A.O. Smith, Giant, Rheem: Rated input >210 kBtu/h; Rated storage volume >2 gallons.

Upon considering these comments, DOE decided to modify the criteria for distinguishing water heaters intended only for non-residential, commercial use. First, upon examining the commercial water heaters available on the market, DOE found that many water heaters that are marketed for residential applications and would otherwise be classified as ''residential-duty'' would be exempted from coverage under the uniform efficiency descriptor because of the requirement that ''residential-duty'' units be capable of delivering water at temperatures only up to 180 °F. (In the November 2013 NOPR, DOE proposed that ''residential-duty'' units would be capable of delivery water temperature up to but not including 180 °F. 78 FR 66202, 66246 (Nov. 4, 2013).) As stated in section I, AEMTCA requires that the test method apply, to the maximum extent practicable, to all water-heating technologies currently in use (42 U.S.C. 6295(e)(5)(H)), except for specific categories of water heaters that do not have residential uses, that can be clearly described, and that are effectively rated using the current thermal efficiency and standby loss descriptors (42 U.S.C. 6295(e)(5)(F)). DOE believes that the proposed criteria to distinguish water heaters intended only for commercial use based on the capability to deliver hot water at temperatures of 180 °F or above would have inappropriately excluded commercial water heaters marketed for residential applications, because such models are designed to include 180 °F as the maximum delivery temperature. However, DOE believes that including 180 °F as the maximum delivery temperature of ''residential-duty'' commercial water heaters is still a valuable distinguishing feature between water heaters intended for residential use and those that are not.

DOE also agrees with commenters to adjust the language of the 180 °F delivery temperature criteria to read ''designed to deliver'' as opposed to ''capable of delivering,'' because a water heater that is ''designed to deliver'' hot water at or below 180 °F might be capable of delivering hot water in excess of 180 °F depending on the field conditions and usage. DOE is aware of situations where a water heater could be subjected to a series of several short draws, which can cause an influx of cold water at the bottom of the tank. Due to stratification, the water at the bottom of the tank near the thermostat may be colder than the water at the top of the tank, causing the burner or elements to turn on and heat the water to a temperature above that for which the water heater is designed. DOE considers a water heater that is ''designed to deliver'' water at or below 180 °F as one that has a user-operable temperature control device with a maximum setting of 180 °F or a maximum setting that would deliver water at or below 180 °F under the conditions defined by the test method. In order to more closely match the language of the test procedure when defining water heaters, DOE is slightly changing the wording from ''designed to deliver water'' to ''designed to provide outlet water.''

Second, because the ASME Boiler and Pressure Vessel Stamp criterion is not required in all jurisdictions and because this criterion is not a definitive identifier of whether a unit is truly commercial, DOE does not adopt this proposed requirement. Rather, as suggested by commenters, DOE adopts limitations on input rating and storage capacity. (Additional comments related to storage capacity and input capacity limitations are discussed in the subsections immediately following this section.) DOE agrees that water-heating units exist in the current marketplace that are not intended for residential use that do not meet the three criteria proposed in the November 2013 NOPR (and listed above) and, thus, establishes input and storage capacity criteria based on water heater type as shown in Table III.2. Although DOE still believes that changes to the input and storage capacity criteria could occur over time and require these criteria to be updated, DOE has concluded that these criteria are necessary to properly classify the scope of the uniform efficiency descriptor.

TABLE III.2—CAPACITY CRITERIA FOR DEFINING NON-RESIDENTIAL WATER HEATERS

Water heater type	Indicator of non-residential application
Gas-fired Storage.	Rated input >105 kBtu/h; Rated storage volume >120 gallons.
Oil-fired Storage.	Rated input >140 kBtu/h; Rated storage volume >120 gallons.
Electric Storage.	Rated input >12 kW; Rated storage volume >120 gallons.
Heat Pump with Storage.	Rated input >15 kW; Rated current >24 A at a rated voltage of not greater than 250 V; Rated storage volume >120 gallons.
Gas-fired Instantaneous.	Rated input >200 kBtu/h; Rated storage volume >2 gallons.
Electric Instantaneous.	Rated input >58.6 kW; Rated storage volume >2 gallons.
Oil-fired Instantaneous.	Rated input >210 kBtu/h; Rated storage volume >2 gallons.

DOE establishes a definition of ''residential-duty commercial water heater'' at 10 CFR 431.102 that defines a ''residential-duty commercial water heater'' as any gas-fired, electric, or oil storage or instantaneous commercial water heater that meets the following conditions:

(1) For models requiring electricity, uses single-phase external power supply;

(2) Is not designed to provide outlet hot water at temperatures greater than 180 °F; and

(3) Is not excluded by the specified limitations regarding rated input and storage volume as described in Table III.2 above.

Although residential-duty commercial water heaters could have residential applications, DOE notes that the new ''residential-duty commercial water heater'' definition represents a type of water heater that, to a significant extent, is distributed in commerce for industrial or commercial use. These water heaters were and continue to be covered industrial equipment, and will continue to be subject to the applicable energy conservation standards in 10 CFR part 431 and the certification requirements for commercial and industrial equipment in 10 CFR part 429. Similarly, although DOE recognizes that some consumer water heaters may be installed in a commercial setting, those water heaters are covered consumer products for the purposes of DOE regulations; the applicable energy conservation standards in 10 CFR part 430 continue to apply; and they must be certified as consumer products under 10 CFR part 429.

If a commercial water heater does not meet all of the three conditions discussed above, it would be classified as a commercial water heater that would not be expected to be used in residential applications and would be subject to the current test methods prescribed in 10 CFR 431.106 and the certification requirements for commercial and industrial equipment in 10 CFR part 429. If a commercial water heater meets all three criteria, DOE will consider it a ''residential-duty commercial water heater,'' which would be subject to the uniform efficiency descriptor and test method established in this final rule. Accordingly, DOE is adding a row to Table 1 of 10 CFR 431.106 specifying 10 CFR part 430, subpart B, appendix E as the test method for this type of equipment.

As stated in the November 2013 NOPR, DOE has determined that certain commercial equipment, including unfired storage tanks, add-on heat pump water heaters, and hot water supply boilers, are not appropriately rated using the uniform descriptor applicable to other water heaters. 78 FR 66202, 66207 (Nov. 4, 2013). Unfired storage tanks are not complete water-heating systems and require additional equipment in the field to operate. As such, their performance as part of a complete water-heating system is dependent upon other components of the system so that use of the uniform descriptor may be unrepresentative of its performance as part of a complete water-heating system. In a similar vein, DOE previously determined that residential add-on heat pump water heaters are not covered residential products. 75 FR 20112, 20127 (Apr. 16, 2010). DOE has authority to cover commercial add-on heat pumps; however, this equipment does not have residential applications and, therefore, is not suitable for application of the uniform efficiency descriptor. DOE also determined that hot water supply boilers are more appropriately rated using the existing metrics for commercial water heaters, as this equipment has very high input ratings and their use is similar to that of other commercial water heaters in commercial applications. 78 FR 66202, 66207 (Nov. 4, 2013). DOE will address the types of commercial water-heating equipment that are excluded from the uniform descriptor (*e.g.,* unfired storage tanks, add-on heat pump water heaters, and hot water supply boilers) in a subsequent test procedure rulemaking. DOE did not receive any comments regarding the exclusion of unfired storage tanks, add-on heat pump water heaters, and hot water supply boilers from coverage under the uniform descriptor.

2. Storage Capacity Limits

As noted above, under the existing regulatory definitions, DOE's current residential water heater test procedures are not applicable to gas or electric water heaters with storage tanks that are at or above 2 gallons (7.6 L) and less than 20 gallons (76 L). The current DOE test procedure for residential water heaters only applies to gas-fired water heaters with storage volumes less than or equal to 100 gallons (380 L), electric resistance and heat pump storage water heaters with storage volumes less than or equal to 120 gallons (450 L), and oil-fired water heaters with storage volumes less than or equal to 50 gallons (190 L). 10 CFR part 430, subpart B, appendix E, sections 1.12.1, 1.12.2, and 1.12.4.

The definitions in the current DOE test procedure specify that gas instantaneous water heaters have a storage volume of less than two gallons (7.6 L) and that electric or gas storage-type water heaters have a storage volume of 20 gallons (76 L) or more. The storage capacity of oil water heaters in the test method is not restricted by a lower limit, with the specification stating that an oil-fired storage water heater simply has a rated capacity less than or equal to 50 gallons (190 L). 10 CFR part 430, subpart B, appendix E, sections 1.7 and 1.12. The definitions for ''Electric Instantaneous Water Heater'' and ''Storage-type Water Heater of More than 2 Gallons (7.6 Liters) and Less than 20 Gallons (76 Liters)'' are currently reserved. *Id.* at section 1.12.5.

In the 1998 rulemaking establishing test procedures for residential water heaters, DOE proposed to include units with storage volumes between 2 and 20 gallons, but commenters raised concerns that the test procedure demand of 64.3 gallons per day was not appropriate for these small units. 63 FR 25996, 26000 (May 11, 1998). At that time, DOE concluded that the data necessary to determine an appropriate representative daily hot water consumption for water heaters with these storage volumes did not exist and that alternative procedures proposed by commenters were not fully evaluated. For these reasons, the Department tabled consideration of the inclusion of these water heaters until a future revision of the DOE test procedure.

As proposed in the November 2013 NOPR, DOE has decided to expand the scope of the water heater test procedure for the uniform efficiency descriptor to

include water heaters with storage volumes between 2 and 20 gallons. 78 FR 66202, 66208 (Nov. 4, 2013). Rheem supported the expansion of the scope to include units between 2 and 20 gallons, but asserted that these products should not be covered by the current energy conservation standards. (Rheem, No. 69 at pp. 7–8) Bradford White requested clarification as to whether products between 2 and 20 gallons would be covered by the current energy conservation standards or test procedure only. (Bradford White, No. 61 at p. 2) AHRI stated that, although DOE is developing a test method for water heaters with storage volumes between 2 and 20 gallons, the current DOE minimum efficiency standards for residential water heaters do not and should not apply to models having rated storage volumes less than 20 gallons, and AHRI requested information regarding DOE activities with regard to standards for these products. (AHRI, No. 80 at pp. 2–3)

The test procedure modifications for water heaters with a storage volume between 2 and 20 gallons specify the method of test set-up (including instrumenting such water heaters), a test method to assess the delivery capacity, and the draw pattern to be used to determine the energy efficiency of such units. The amendments for water heaters with storage volumes between 2 and 20 gallons are discussed in detail in section III.C of this final rule. Currently, there are no minimum energy conservation standards applicable to water heater products with a storage volume between 2 and 20 gallons, which will be the case until DOE conducts a rulemaking to establish such standards. DOE clarifies this point in this final rule's amendments to 10 CFR 430.32(d).

AEMTCA requires DOE to reconsider the scope of all water heater test procedures. AEMTCA amended EPCA to require that the new uniform metric apply to the extent possible to all water-heating technologies. (42 U.S.C. 6295(e)(5)(F) and (H))

In considering the upper limit to the storage capacity range, DOE is not aware of any residential water heaters available on the market with storage volumes above 100 gallons, 120 gallons, and 50 gallons for gas-fired, electric (resistance and heat pump), and oil-fired water heaters, respectively, that would be covered as residential products under EPCA. AHRI, A.O. Smith, Giant, and Rheem supported the continued use of the current maximum storage capacity limits. (AHRI, No. 75 at p. 2; A.O. Smith, No. 62 at p. 4; Giant, No. 76 at p. 2; Rheem, No. 69 at p. 2)

In contrast, as AET stated in response to the January 2013 RFI, the ASME Boiler and Pressure Vessel Code requires that vessels intended to store fluids under pressure must individually undergo a rigorous test and inspection procedure if they have volumes greater than 120 gallons. AET noted that because these test and certification procedures are expensive, manufacturers will avoid making products intended for residential use that require an ASME inspection and code stamp. For this reason, AET commented that the upper limit of 120 gallons would be appropriate for all residential water heaters. (AET, No. 22 at pp. 6–7)

DOE has reconsidered the water heater test procedure scope and expands the scope of the test procedure to include all covered water heaters that could have residential applications and adjusts the current limitations on maximum storage volume in the residential test procedure for gas-fired, electric, and oil storage water heaters to 120 gallons for all three types. DOE concludes that the amended test method adopted in today's final rule adequately addresses water heaters regardless of storage volume, provided that they meet the definition of a ''residential water heater'' or a ''residential-duty commercial water heater.'' Consequently, DOE's uniform descriptor test procedure will apply to residential storage water heaters and ''residential-duty commercial water heaters'' with storage volumes up to 120 gallons. As noted previously in section III.A.1, DOE excludes non-residential (commercial) water heaters, and DOE agrees with AET that a storage capacity limit of 120 gallons adequately separates residential and commercial units of all water heater types.

3. Input Capacity Limits

AEMTCA requires that the new uniform efficiency descriptor apply to the maximum extent practical to all water-heating technologies in use now or in the future. (42 U.S.C. 6295(e)(5)(H)) DOE's current residential water heater test procedure is not applicable to gas-fired instantaneous water heaters with input capacities at or below 50,000 Btu/h or at or above 200,000 Btu/h. 10 CFR part 430, subpart B, appendix E, section 1.7.2. In addition, the existing test procedure is not applicable to gas-fired storage water heaters with input capacities above 75,000 Btu/h, electric storage water heaters with input ratings above 12 kW, and oil-fired storage water heaters with input ratings above 105,000 Btu/h. 10 CFR part 430, subpart B, appendix E, section 1.12.

In the November 2013 NOPR, DOE proposed to eliminate the minimum limit on the firing rate of instantaneous gas water heaters of 50,000 Btu/h. 78 FR 66202, 66209 (Nov. 4, 2013). As discussed in section III.C, DOE adopts multiple draw patterns that vary based on the delivery capacity of the water heater. Because the draw pattern is dependent upon delivery capacity, gas-fired instantaneous units with a firing rate below 50,000 Btu/h can be tested under the new procedure. Thus, DOE has concluded that there is no reason to retain this lower limit on gas-fired instantaneous water heater delivery capacity. No comments were received opposing this measure.

Similarly, DOE proposed to remove the maximum input ratings for gas-fired, electric, and oil-fired storage water heaters and for gas-fired instantaneous water heaters from the test procedure (although maximum input ratings specified in EPCA would still apply for the purposes of equipment classification). Because draw patterns vary based on delivery capacity, the new test procedure applies to models with input capacities above those included in the current residential water heater test procedure. Although these maximum input limitations were based upon EPCA's ''water heater'' definition at 42 U.S.C. 6291(27), because the AEMTCA amendments require that the new metric apply to all water-heating technologies except those that do not have a residential use, DOE believes that such limits are no longer controlling or appropriate in terms of the scope of the water heaters test procedure. DOE did not receive any comments in response to the NOPR related specifically to the inclusion of input limitations on residential products in the test procedure, but did receive comments regarding the application of the test procedure to commercial models and suggesting input capacity limitations. Those comments are discussed in section III.A.1. As discussed in section III.A.1, input rating limitations are useful to distinguish water heaters without a residential use. Therefore, although DOE will remove the input capacity limitations from the scope of the test method, DOE establishes input capacity limits to define which units would qualify as ''residential-duty'' commercial units and, thus, be required to be tested using the uniform descriptor test method. These input capacity limitations are shown in Table III.2 above.

4. Electric Instantaneous Water Heaters, Gas-Fired Heat Pump Water Heaters, and Oil-Fired Instantaneous Water Heaters

As discussed in the November 2013 NOPR, DOE's test procedures do not contain a definition for ''electric instantaneous water heater,'' but rather have a space reserved to define that term (10 CFR part 430, subpart B, appendix E, section 1.7.1). 78 FR 66202, 66209 (Nov. 4, 2013). EPCA defines ''electric instantaneous water heater'' as containing no more than one gallon of water per 4,000 Btu per hour of input and having an input capacity of 12 kilowatts (kW) or less. (42 U.S.C. 6291(27)(B)) As noted in the November 2013 NOPR, the heating power required for electric instantaneous water heaters intended for whole-home applications typically is much higher than the power capability commonly found in storage-type electric water heaters. 78 FR 66202, 66209 (Nov. 4, 2013). In the November 2013 NOPR, DOE proposed to amend its water heater test procedure to include applicable provisions for electric instantaneous water heaters, and to define the term ''electric instantaneous water heater.'' *Id.* at 66210.

AIM commented that DOE needs to be more inclusive of all types of water heaters when defining the types of water heaters that will be covered by the uniform descriptor. (AIM No. 70 at p. 2)

DOE agrees in principle that all existing types of water heaters should be defined and, thus, adopts definitions of ''gas-fired heat pump water heater'' and ''oil-fired instantaneous water heater,'' in addition to a definition for ''electric instantaneous water heater.'' While not yet commercially available, DOE is aware that manufacturers are currently developing gas-fired heat pump water heaters and oil-fired instantaneous water heaters. Further, the new test procedure applies to these types of water heaters. Accordingly, DOE adds definitions for these types of water heaters at 10 CFR 430.2. (In addition, as proposed in the November 2013 NOPR, DOE is moving all other definitions pertaining to defining the types of water heaters to 10 CFR 430.2.) All three definitions reflect the definitions of these products as set forth in EPCA (42 U.S.C. 6291(27)) and are based on the current definitions for other types of water heaters. The definition for ''electric instantaneous water heater'' has been altered slightly from the definition proposed in the November 2013 NOPR to better align with the requirements of EPCA for these products. These definitions read as follows:

Gas-fired Heat Pump Water Heater means a water heater that uses gas as the main energy source, has a nameplate input rating of 75,000 Btu/h (79 MJ/h) or less, has a maximum current rating of 24 amperes (including all auxiliary equipment such as fans, pumps, controls, and, if on the same circuit, any resistive elements) at an input voltage of no greater than 250 volts, has a rated storage capacity of 120 gallons (450 liters) or less, and is designed to transfer thermal energy from one temperature level to a higher temperature level to deliver water at a thermostatically-controlled temperature less than or equal to 180 °F (82 °C).

Oil-fired Instantaneous Water Heater means a water heater that uses oil as the main energy source, has a nameplate input rating of 210,000 Btu/h (220 MJ/h) or less, contains no more than one gallon of water per 4,000 Btu per hour of input, and is designed to provide outlet water at a controlled temperature less than or equal to 180 °F (82 °C). The unit may use a fixed or variable burner input.

Electric Instantaneous Water Heater means a water heater that uses electricity as the energy source, has a nameplate input rating of 12 kW (40,956 Btu/h) or less, contains no more than one gallon of water per 4,000 Btu per hour of input, and is designed to provide outlet water at a controlled temperature less than or equal to 180 °F (82 °C). The unit may use a fixed or variable burner input.

DOE notes that the definition of ''electric instantaneous water heater'' being added to 10 CFR 430.2 encompasses only electric instantaneous water heaters that are residential (*i.e.,* with an input capacity of 12 kW or less). However, as discussed in section III.A.1, commercial (*i.e.,* with an input capacity greater than 12 kW) electric instantaneous water heaters with input ratings up to 58.6 kW are considered ''residential-duty commercial water heaters,'' and because water heaters both above and below 12 kW have residential applications, both types would be covered by the uniform efficiency descriptor.

In response to the November 2013 NOPR, Seisco and Thomas Harman commented that 12 kW is not an appropriate cutoff for electric instantaneous water heaters because there are many electric instantaneous water heaters designed for and used in residences that have input ratings above 12 kW. (Harman, No. 53 at p. 1; Seisco, No. 57 at pp. 10–11) In response, DOE notes that the 12 kW limit is defined by EPCA and it is not at DOE's discretion to change. However, the 12 kW criteria will apply only insofar as determining the applicable minimum energy conservation standard. As such, it remains the point above which electric instantaneous models would be classified as ''commercial'' equipment for the basis of determining the applicable energy conservation standards. Limits on the application of the uniform efficiency descriptor pursuant to the new test procedure based on input and volume capacities are set forth in Table III.2, above.

This final rule also provides for a maximum flow rate test for electric instantaneous water heaters and a test to determine the energy efficiency expressed in terms of uniform energy factor for these products. (As discussed in section III.B, the energy efficiency metric for water heaters will be changed from ''energy factor'' to ''uniform energy factor.'') These tests are identical to those provided for gas-fired instantaneous water heaters.

B. Uniform Efficiency Descriptor Nomenclature

AEMTCA provided the following options for the uniform efficiency descriptor metric: (1) A revised version of the energy factor descriptor currently in use; (2) the thermal efficiency and standby loss descriptors currently in use; (3) a revised version of the thermal efficiency and standby loss descriptors; (4) a hybrid of descriptors; or (5) a new approach. (42 U.S.C. 6295(e)(5)(G))

In the November 2013 NOPR, DOE proposed to use a revised version of the energy factor as the uniform efficiency descriptor. 78 FR 66202, 66210 (Nov. 4, 2013). DOE received no comments opposing the continued use of the energy factor metric in response to the November 2013 NOPR. However, DOE received four comments (A.O. Smith, Bradford White, EEI, Joint Comment) suggesting that the ''energy factor'' nomenclature be adjusted to distinguish the old energy factor from the new. Additionally, the four commenters suggest that the new ''energy factor'' nomenclature be differentiated by class (*i.e.,* subscripts with the draw classification). (A.O. Smith No. 62 at p. 3; Bradford White No. 61 at p. 6; EEI No. 63 at p. 4; Joint Comment No. 77 at p. 2) NEEA and NPCC commented that the ''energy factor'' nomenclature as it currently stands is appropriate and that changes to the test procedure are not significant enough to warrant a new descriptor. (NEEA and NPCC No. 64 at p. 1) NEEA and NPCC and the Joint Comment stated that the new ''energy factor'' nomenclature should not be distinguished by fuel type or technology

group. (NEEA and NPCC No. 64 at p. 16; Joint Comment No. 77 at p. 2)

DOE agrees with commenters that confusion could occur if the name of the metric remains unchanged between the current and amended test procedures. Because the existing and new ratings are determined under different test conditions, which can result in a different rating, DOE believes it is necessary to adopt a new name to distinguish between the efficiency result under the existing test procedure and the result under the amended test procedure. As a result, DOE adopts a ''uniform energy factor,'' to be denoted as ''UEF'' in the test procedure, as distinguished from the ''E_f'' rating determined under the current test procedure.

C. Draw Pattern

The term ''draw pattern'' describes the number, flow rate, length, and timing of hot water removal from the water heater during testing. Primary decisions in developing draw patterns include the total amount of water to be removed during the test and the number of draws during the test. The total amount of water taken in each draw, which is a function of the flow rate and the length of the draw, must also be specified. Finally, the spacing between those draws is needed to complete the specification of the draw pattern.

DOE proposed to modify the draw pattern that is used in the existing test procedure in the November 2013 NOPR. 78 FR 66202, 66210–17 (Nov. 4, 2013). Under DOE's proposal, the single draw pattern that is currently applied during the 24-hour simulated use test would be replaced with one of four patterns that is more representative of the demand put on a water heater of different delivery capacity. These four draw patterns were termed ''point-of-use,'' ''low usage,'' ''medium usage,'' and ''high usage.'' The selection of the draw pattern to be used in the simulated-use test would be based upon the results of the first-hour rating test or the maximum GPM (gallons per minute) rating test.

DOE received seven comments in general support of the move to four different draw patterns. (HTP No. 59 at p. 2; A.O. Smith No. 62 at p. 2; EEI No. 63 at p. 4; NEEA and NPCC No. 64 at p. 3; AHRI No. 75 at p. 3; Giant No. 76 at p. 3; Joint Comment No. 77 at p. 6) HTP recommended that DOE consider altering the total water drawn in the medium-usage pattern to 64.8 gallons to assist in correlating between current metrics and the proposed metrics. NEEA and NPCC indicated a slight preference for draw patterns proposed as part of the deliberations for ASHRAE 118.2, ''Method of Testing for Rating Residential Water Heaters,'' because those draws are more consistent with the daily hot water use found in their field data. AHRI indicated that the proposed draw patterns were appropriate but that it preferred the draw patterns submitted in its comment to the January 2013 RFI. (AHRI No. 46 at p. 5)

DOE received one comment that supported the move to multiple draw patterns but that recommended five draw patterns instead of four and provided alternative bases for developing the patterns. (AET No. 58 at p. 3) AET commented that the proposed draw patterns could result in water being delivered during the simulated-use test that may be considered to be too cold for typical uses and recommended that a fifth category termed ''Sink'' be created that would apply to the smallest water heaters. AET discussed how the amount of water that can be withdrawn in a continuous draw can be estimated from the first-hour rating and stated that the maximum draw volumes imposed in the proposed draw patterns may yield an ''invalid test.'' Particular emphasis was placed on the point-of-use category, in which a 2-gallon water heater would be expected to deliver a 2-gallon draw. Another concern expressed by AET is that water heaters with the same storage volume but with slightly different input rates would be tested according to different draw patterns. AET suggested that selection of the draw pattern used for the simulated-use test should be based on two factors: the measured storage volume and the first-hour rating. AET recommended the largest draw volume that should be implemented in each draw pattern to meet the capabilities of the water heaters in that category. AET estimated that the first draw delivery capability of a storage water heater is 0.95*0.85*(Rated Storage Volume), where 0.95 represents the currently allowed tolerance on storage volume and 0.85 accounts for mixing of hot and cold water during draws. *Id.*

DOE received three comments from AET, SMT, and Bradford White related to the details in the proposed test procedure of determining the standby loss coefficient, ''UA,'' which is used to adjust the daily energy consumption to account for deviations from nominal conditions. AET expressed concern that, with water heaters having very slow recoveries, the test could result in a water heater with drastically different stored water temperature at the start of the test than at the end, thereby necessitating a major correction to the energy consumed. AET recommended extending the test beyond 24 hours for such water heaters, ending the test only after a recovery occurs. Energy consumption during the test would be modified to normalize to a 24-hour time period by removing the estimated standby loss during the time exceeding 24 hours. AET commented that it is much more accurate to normalize to a common time period than it is to end the test prior to a recovery occurring. AET stated that this approach would ensure that a recovery occurs during the period of the test when the UA value is determined and that it would result in an average tank temperature that changes less from the start of the test to the end of the test. (AET No. 58 at p. 1). SMT expressed concern that large-capacity models may not initiate recovery during the first draw cluster of tests or may initiate a recovery during a standby portion of the test. In these cases, SMT commented that determination of the UA may not be possible. SMT suggested that the test should start with a fully-charged water heater and that the first draw cluster should start eight hours after this point. According to SMT, the UA value would be determined during this eight-hour period. (SMT No. 66 at p. 2). Bradford White commented that the new test procedure can take standby loss readings when the water heater is recovering and/or when water is being drawn, which would lead to inaccurate measures of standby loss. (Bradford White No. 61 at p. 8).

After consideration of these comments, DOE has decided to adopt the modifications to the draw patterns as originally proposed in the November 2013 NOPR. DOE has reviewed the total amount of water drawn per day in each draw pattern and has observed that those values match well with field data collated by the Lawrence Berkeley National Laboratory.[10] DOE acknowledges that a medium-use draw pattern having the same daily draw volume as that prescribed in the current test procedure would remove some uncertainty in converting from the existing efficiency metric to the new uniform metric since the total daily draw volume would not impact the rating. However, DOE has decided to maintain a lower daily draw volume in the new draw schedule to better match

[10] Lutz, JD, Renaldi, Lekov A, Qin Y, and Melody M., ''Hot Water Draw Patterns in Single Family Houses: Findings from Field Studies,'' Lawrence Berkeley National Laboratory Report number LBNL–4830E (May 2011) (Available at *http://www.escholarship.org/uc/item/2k24v1kj*) (last accessed June 17, 2014).

field data available for a medium-usage situation.

DOE considered adding a fifth draw pattern as recommended by AET, but a review of data from testing of low-volume water heaters indicate that the efficiency can be accurately determined using the four proposed draw patterns. While delivery temperatures did drop below 120 °F during some draws of these tests, DOE has concluded that the efficiency is still accurately determined using this test procedure and that the added complexity of an additional draw pattern is not warranted.

DOE will continue to use the first-hour rating to assign a draw pattern for use during the simulated-use test. DOE examined using a combination of first-hour rating and storage volume to categorize the water heater for assigning a draw pattern, as suggested by AET, but is concerned that some water heaters may not fit into any category because their storage volumes would correspond to one draw pattern while their first-hour ratings would correspond to a different one. Additionally, as noted above, AET estimates that the first draw delivery capability of a storage water heater is 0.95*0.85*(Rated Storage Volume), which accounts for the tolerance currently afforded manufacturers on storage volume and the effect of mixing of hot and cold water within the storage water heater during draws. DOE agrees that this method for estimating first draw delivery capacity is appropriate for conventional electric storage water heaters. However, the Department is concerned that the effect of mixing hot and cold water within the unit during draws is not well understood for the emerging water-heating technologies that are noted by the commenter. Therefore, basing the categorization of water heaters into usage bins (*i.e.,* very small, low, medium, and high) to determine the appropriate draw pattern based on this uncertain number is likely to lead to miscategorization for some water heaters. In the end, DOE has decided that the first-hour rating is the best metric available for determining water heater size classification for purposes of efficiency testing.

DOE is adopting the draw volumes proposed in the November 2013 NOPR. Test results [11] indicate that the draw volumes incorporated into the proposed patterns, while resulting in delivery temperatures that may not match the nominal outlet temperatures, provide a sufficiently accurate estimate of the energy efficiency and that these draw patterns will result in an accurate estimate of the efficiency of water heaters within each size classification. The flow rates and volumes specified in the November 2013 NOPR represent the best alternative for characterizing water heaters at both the lower and upper limits of a size category.

In response to the comment from Bradford White stating concern that the standby loss coefficient (UA) can be determined while a recovery is occurring, DOE notes that there is a possibility of a recovery taking place during the portion of the test when data are collected to determine UA, just as there is the possibility in the current test method. The determination of UA, however, may require a reheat to maintain the stored water temperature to obtain a valid estimate of UA. As for the standby time period during which energy loss to the ambient is corrected, DOE notes that time when draws are taking place are omitted from the calculation. See section 6.3.5 of appendix E as adopted in this final rule. Therefore, DOE is making no changes in response to the comment.

DOE considered amending the timing of the simulated-use test, as suggested by some commenters, to improve the determination of UA. DOE examined data from a range of simulated-use tests and decided that the test procedure requires modification to improve the determination of UA for some special cases.

The first modification responds to concerns expressed about the determination of UA for water heaters with low recovery rates. DOE observed that the first recovery may not begin until several hours into the designated standby period and could extend into the second draw cluster. DOE examined data from tests on such water heaters and modified the test procedure provisions for determining UA in the event that a recovery does not begin during the first draw cluster.

As proposed in the November 2013 NOPR, the standby period for determination of UA was intended to occupy the majority of the period between the end of the first draw cluster and the start of the second draw cluster. 78 FR 66202, 66217, 66236 (Nov. 4, 2013). However, because the standby period is supposed to start at the end of the first recovery under the proposed procedure, the standby period may not start until well into the 24-hour test for water heaters with a very slow recovery rate. For one tested water heater, DOE observed that the first recovery did not begin until several hours past the end of the first draw cluster and ended after subsequent draws occurred during the test. Under the proposed test procedure, the standby period started at the end of this first recovery period and continued until the next draw started. This procedure could result in a very short time period for determination of UA, which might lead to erroneous results.

To address this issue, DOE amends the proposed test procedure by starting the standby period five minutes following the last draw of the first draw cluster if a recovery is not occurring, as opposed to waiting until after the first recovery period ends. The end point of the standby period will remain as proposed in the November 2013 NOPR. This change ensures an accurate determination of UA for all units, including those with low recovery rates and those that delay onset of heating until after the first cluster of draws.

The second clarification addresses water heaters that undergo a recovery that begins at the end of the first draw cluster and continues over the entire standby period between the first and second draw clusters. In these instances, the standby period continues past the end of the 24-hour test. To address this issue, DOE amends the test procedure to initiate the standby period at the end of the first recovery following the final draw and to continue measurements for eight hours from that point.

DOE concludes that the approaches implemented in the final rule will determine a standby loss coefficient that accurately adjusts the daily energy consumption when the ambient temperature deviates from the nominal value during testing. The Department is adopting this approach, as opposed to the one presented by AET, in order to maintain a test duration of 24 hours for nearly all water heaters while providing accurate representation of the water heater's energy efficiency.

DOE received one comment requesting a change in the name of the ''point-of-use'' draw pattern, stating that the term ''point-of-use'' describes the installed location of a water heater as opposed to the delivery capacity, which is the characteristic described by the other three category names (*i.e.,* ''low,'' ''medium,'' and ''high''). (AIM No. 71 at p. 1) AIM suggested a name of ''very small'' for this category. DOE agrees in principle with this comment and has decided to change the name of the ''point-of-use'' category to ''very-small-usage.''

Bradford White commented that the tolerances of +/−0.25 gallons for the volume removed in each draw in the proposed test procedure could lead to

[11] Test results from DOE testing for the NOPR are summarized in the November 2013 Water Heater Test Procedure Rulemaking Development Testing Preliminary Report, available in the rulemaking docket at: *http://www.regulations.gov/#!documentDetail;D=EERE-2011-BT-TP-0042-0052.*

large discrepancies in the overall volume removed, which could in turn necessitate a test laboratory to skip a final draw to achieve the overall tolerance of +/−1 gallon for the daily water delivery. (Bradford White No. 61 at pp. 8–9) DOE agrees with this observation and is tightening the tolerances on some draws in the final rule. For draws taken at a nominal flow rate of 1.7 GPM or less, DOE is requiring that those draws have a tolerance of +/−0.1 gallons. With the data acquisition rate during draws set to 3 seconds, DOE believes that this level of tolerance is achievable. At the nominal flow rate of 3 GPM, however, the frequency of data collection may not allow for such tight control of draw volumes during each draw, so DOE is maintaining the tolerance of +/−0.25 GPM for those draws. DOE is already increasing the frequency of data collection and does not believe it is necessary to increase it further to allow for a stricter tolerance on 3 GPM draws. DOE notes that only the high-usage pattern contains draws with a flow rate of 3 GPM, and only 3 of the 14 draws are at that flow rate. As a result, DOE expects that the overall tolerance of +/−1 gallon for the daily water delivery can be achieved because the tighter tolerance applies to the remaining 11 draws.

DOE acknowledges that, given the tolerances on individual draws, a situation may arise whereby the volume of the final draw would need to be adjusted downward so much that a draw volume of zero may be required to meet the overall tolerance on the daily draw volume. DOE concludes that this scenario would result in an invalid test and has inserted a statement in the test procedure indicating that ''if this adjustment to the volume drawn in the last draw results in no draw taking place, the test is considered invalid.'' Table III.3 through Table III.6 show the draw patterns that DOE is adopting.

TABLE III.3—VERY-SMALL-USAGE DRAW PATTERN

Draw No.	Time during test [hh:mm]	Volume [gallons (L)]	Flow rate ** [GPM (L/min)]
1 *	0:00	2.0 (7.6)	1 (3.8)
2 *	1:00	1.0 (3.8)	1 (3.8)
3 *	1:05	0.5 (1.9)	1 (3.8)
4 *	1:10	0.5 (1.9)	1 (3.8)
5 *	1:15	0.5 (1.9)	1 (3.8)
6	8:00	1.0 (3.8)	1 (3.8)
7	8:15	2.0 (7.6)	1 (3.8)
8	9:00	1.5 (5.7)	1 (3.8)
9	9:15	1.0 (3.8)	1 (3.8)
Total Volume Drawn Per Day: 10 gallons (38 L)			

* Denotes draws in first draw cluster.
** Should the water heater have a maximum GPM rating less than 1 GPM (3.8 L/min), then all draws shall be implemented at a flow rate equal to the rated maximum GPM.

TABLE III.4—LOW-USAGE DRAW PATTERN

Draw No.	Time during test [hh:mm]	Volume [gallons (liters)]	Flow rate [GPM (L/min)]
1 *	0:00	15.0 (56.8)	1.7 (6.4)
2 *	0:30	2.0 (7.6)	1 (3.8)
3 *	1:00	1.0 (3.8)	1 (3.8)
4	10:30	6.0 (22.7)	1.7 (6.4)
5	11:30	4.0 (15.1)	1.7 (6.4)
6	12:00	1.0 (3.8)	1 (3.8)
7	12:45	1.0 (3.8)	1 (3.8)
8	12:50	1.0 (3.8)	1 (3.8)
9	16:15	2.0 (7.6)	1 (3.8)
10	16:45	2.0 (7.6)	1.7 (6.4)
11	17:00	3.0 (11.4)	1.7 (6.4)
Total Volume Drawn Per Day: 38 gallons (144 L)			

* Denotes draws in first draw cluster.

TABLE III.5—MEDIUM-USAGE DRAW PATTERN

Draw No.	Time during test [hh:mm]	Volume [gallons (liters)]	Flow rate [GPM (L/min)]
1 *	0:00	15.0 (56.8)	1.7 (6.4)
2 *	0:30	2.0 (7.6)	1 (3.8)
3 *	1:40	9.0 (34.1)	1.7 (6.4)
4	10:30	9.0 (34.1)	1.7 (6.4)
5	11:30	5.0 (18.9)	1.7 (6.4)
6	12:00	1.0 (3.8)	1 (3.8)
7	12:45	1.0 (3.8)	1 (3.8)
8	12:50	1.0 (3.8)	1 (3.8)
9	16:00	1.0 (3.8)	1 (3.8)

TABLE III.5—MEDIUM-USAGE DRAW PATTERN—Continued

Draw No.	Time during test [hh:mm]	Volume [gallons (liters)]	Flow rate [GPM (L/min)]
10	16:15	2.0 (7.6)	1 (3.8)
11	16:45	2.0 (7.6)	1.7 (6.4)
12	17:00	7.0 (26.5)	1.7 (6.4)
Total Volume Drawn Per Day: 55 gallons (208 L)			

* Denotes draws in first draw cluster.

TABLE III.6—HIGH-USAGE DRAW PATTERN

Draw No.	Time during test [hh:mm]	Volume [gallons (liters)]	Flow rate [GPM (L/min)]
1*	0:00	27.0 (102)	3 (11.4)
2*	0:30	2.0 (7.6)	1 (3.8)
3*	0:40	1.0 (3.8)	1 (3.8)
4*	1:40	9.0 (34.1)	1.7 (6.4)
5	10:30	15.0 (56.8)	3 (11.4)
6	11:30	5.0 (18.9)	1.7 (6.4)
7	12:00	1.0 (3.8)	1 (3.8)
8	12:45	1.0 (3.8)	1 (3.8)
9	12:50	1.0 (3.8)	1 (3.8)
10	16:00	2.0 (7.6)	1 (3.8)
11	16:15	2.0 (7.6)	1 (3.8)
12	16:30	2.0 (7.6)	1.7 (6.4)
13	16:45	2.0 (7.6)	1.7 (6.4)
14	17:00	14.0 (53.0)	3 (11.4)
Total Volume Drawn Per Day: 84 gallons (318 L)			

* Denotes draws in first draw cluster.

D. Instrumentation

In the November 2013 NOPR, DOE proposed to maintain the instrumentation installation requirements and piping configuration as currently specified in the residential water heater test procedure. 78 FR 66202, 66217 (Nov. 4, 2013). For storage water heaters having a rated volume below 20 gallons, which are not covered in the existing DOE test method, DOE proposed that the average tank temperature be determined based on three temperature sensors located at the vertical midpoints of three sections of equal volume within the storage tank, as opposed to the currently required six sensors for storage water heaters having a rated volume above 20 gallons. *Id.* No comments were received opposing this approach, but AET requested that guidance should be provided regarding the unspecified horizontal lengths of pipe in the figures. (AET No. 58 at p. 20) For the final rule, DOE has modified Figures 1 through 4 of the test procedure to include those dimensions.

DOE proposed in the November 2013 NOPR to tighten the allowed accuracy on electric power and energy measuring equipment from the current value of ±1 percent to ±0.5 percent. 78 FR 66202, 66217 (Nov. 4, 2013). A study has shown the significant effect of the accuracy of the electric power measurements on the uncertainty in the overall energy factor.[12] A similar change was made in ASHRAE 118.2–2006, ''Method of Testing for Rating Residential Water Heaters,'' and DOE research confirms that equipment having this tolerance level is readily available. DOE also proposed in the November 2013 NOPR that, for mass measurements greater than or equal to 10 pounds (4.5 kg), a scale that is accurate within ±0.5 percent of the reading must be used to make the measurement. *Id.* Lastly, DOE proposed that, for relative humidity measurements, a sensor that is accurate within ±1.5 percent of the reading be used to make the measurement. *Id.* at 66220. No comments were received opposing these proposals, so DOE has incorporated these proposals into the final rule.

DOE also proposed in the November 2013 NOPR to modify the data acquisition rate of the inlet and outlet water temperature during draws. *Id.* at 66217. Currently, for all water heaters except variable firing rate instantaneous water heaters, measurements of the inlet and outlet water temperature are taken at 5-second intervals starting 15 seconds after the draw commences. For instantaneous water heaters with a variable firing rate, inlet and outlet water temperature measurements are taken at 5-second intervals starting 5 seconds after the draw commences. The test procedure amendments call for temperature data at the inlet and outlet temperature sensors to be recorded at 3-second intervals starting 5 seconds after commencement of the draw for all water heaters. Accordingly, DOE also proposed that the time constant of the instruments used to measure the inlet and outlet water temperatures be no greater than 2 seconds. DOE anticipates that this approach will better capture the energy impact of water heater startup and cycling. *Id.* at 66217. No comments were received opposing these measures, so DOE has incorporated these proposals into the final rule.

E. Test Conditions

1. Outlet Water Temperature

The current residential water heater test procedure calls for the temperature of the tank to be set so that the average hot water temperature within the storage tank is at 135 °F ± 5 °F (57.2 °C ± 2.8 °C). 10 CFR part 430, subpart B, appendix E, section 2.4. The set point

[12] Healy WM, Lutz JD, and Lekov AB., ''Variability in Energy Factor Test Results for Residential Electric Water Heaters,'' *HVAC&R Research,* Vol. 9, No. 4 (October 2003).

impacts the performance of various types of water heaters differently, so DOE reexamined in the proposed test procedure the set point specification and how it is determined. In the November 2013 NOPR, DOE proposed to use a measurement of the temperature of the delivered water, rather than mean tank temperature, for setting the temperature for storage-type water heaters, and also proposed that the set point temperature of all residential water heaters be reduced to 125 °F +/− 5 °F (51.7 °C +/− 2.8 °C). 78 FR 66202, 66219–20 (Nov. 4, 2013). This value was primarily selected based on data available in DOE's analysis for the April 2010 energy conservation standards final rule, which found that the average set point temperature for residential water heaters in the field is 124.2 °F (51.2 °C). Additionally, the recent compilation of field data across the United States and southern Ontario by LBNL (referenced above) found a median daily outlet water temperature of 122.7 °F (50.4 °C), which supports specifying a test set point temperature of 125 °F. DOE proposed that this new value would apply to first-hour rating tests for storage water heaters, maximum flow rate tests for instantaneous water heaters, and energy factor tests for all water heaters. DOE also tentatively concluded that a set point of 125 °F in the test method would not result in safety concerns related to the growth of Legionella. Further, DOE noted that water heaters are commonly set to temperatures in the range of 120 °F to 125 °F even though the current set point in the test method is 135 °F. 78 FR 66202, 66219 (Nov. 4, 2013).

DOE received five comments (AET, EEI, HTP, NEEA and NPCC, Joint Comment) in response to DOE's outlet water temperature proposals in the November 2013 NOPR supporting the switch to a set point temperature of 125 °F for the first-hour rating and maximum flow rate tests and the 24-hour simulated-use test. (AET, No. 58 at p. 5; EEI, No. 63 at p. 5; HTP, No. 59 at pp. 1–3; NEEA and NPCC, No. 64 at p. 9; Joint Comment, No. 77 at pp. 6–7) Advocates for the 125 °F outlet water temperature argue that it is the most representative of actual use in the field and, thus, should be used to determine performance under representative conditions. Additionally, AET and HTP suggested that specifying an outlet water temperature, as opposed to a stored water temperature, is more appropriate for evaluating water heaters using certain controls that purposely keep the stored water temperature at a low value. (AET No. 58 at p. 1; HTP, No. 59 at p. 3) DOE received five comments (AIM, AHRI, A.O. Smith, GE, and Giant) in favor of keeping the set point temperature at 135 °F for the first-hour rating test or increasing it for both the first-hour rating/maximum flow rate test and the 24-hour simulated-use test. (AIM, No. 72 at p. 3; AHRI, No. 75 at pp. 3–4; A.O. Smith, No. 62 at p. 2; GE, No. 78 at p. 1; Giant, No. 76 at pp. 2–3) Four of the commenters who opposed the decrease in set point (AHRI, A.O. Smith, GE, Giant) argue that the burden of reestablishing the draw pattern bin categories using first-hour rating and maximum GPM values under the lower set point is too great because the change in first-hour ratings will add additional uncertainty to the establishment of the bins. AIM argued that the set point temperature should be increased because when the temperature is decreased in the field, the water heater will see a boost in energy efficiency. Rheem acknowledged that many water heaters are operated at lower temperatures than the set point specified in the current DOE test procedure and suggested that the 24-hour simulated-use test and associated draws would be more representative at the 125 °F set point temperature. However, based on test data, Rheem argued that the changes to the first-hour rating values from the change in set point are too unpredictable to serve as a basis for determining the draw pattern bin categories and suggested that the first-hour rating test should continue to be performed at 135 °F, as is current practice. (Rheem, No. 69 at pp. 3, 5)

DOE has carefully considered these comments and concludes that a delivered water temperature of 125 °F will be applied to first-hour rating tests for storage water heaters, maximum flow rate tests for flow-activated water heaters, and energy factor tests for all water heaters. DOE is required to establish test procedures that are representative of how a covered product would be used in the field, and based on the data discussed previously, DOE concludes that 125 °F is the most representative temperature for the United States market. DOE has determined that the test should be conducted at a typical operating temperature and should not penalize those units optimized for such typical conditions. Moreover, DOE has determined that conducting the simulated-use test at a different temperature from the delivery capacity tests would add an undue burden on manufacturers and would result in ratings that would not be representative of typical usage in the field. While maintaining the test temperature at the value currently used in the test procedure could eliminate one source of uncertainty in converting existing energy factors to new uniform energy factors, DOE has determined that this conversion is feasible and that the benefits of testing at a representative temperature outweigh the short-term challenges in converting existing ratings.

In response to the concerns expressed by AHRI, A.O. Smith, GE, and Giant regarding uncertainties in converting first-hour ratings values obtained at 135 °F to comparable values at 125 °F, DOE revisited the values that were used to place water heaters into bins for uniform energy factor testing. In the November 2013 NOPR, DOE based these breakpoint values on information present in the current plumbing code that indicate appropriate water heaters for various home configurations based on their first hour rating values obtained under the existing test procedure. 78 FR 66202, 66214 (Nov. 4, 2013). Preliminary testing by DOE indicated that the first-hour ratings obtained under the new procedure were comparable to those obtained under the existing test procedure, so DOE proposed to maintain the breakpoints between bins despite the change in the conditions for the first-hour rating test.

DOE requested data to demonstrate the effect of modifying the first-hour rating test conditions and received data from Rheem and Bradford White. (Rheem No. 69 at p. 3; Bradford White No. 61 at p. 8) Rheem presented actual first-hour rating values under both the current test and the proposed test, whereas Bradford White simply provided the percentage change in the first-hour rating between the two test procedures. Both data sets suggest an overall downward trend of first-hour rating under the proposed test procedure but that there is variability in the results. Based on these data and additional data collected by DOE, the Department concludes that numerous characteristics of a water heater affect the change in its first-hour rating obtained at 135 °F, as compared to that obtained at 125 °F. The uncertainty in how the ratings change, however, does not justify abandoning the 125 °F test temperature. Since DOE has determined that the most representative delivery temperature is 125 °F and no comments were received that refuted the method applied to obtain the first-hour rating at that temperature, DOE concludes that the first-hour rating test, as proposed, provides an appropriate measure of the delivery capacity of a water heater as would be observed in the field.

DOE maintains that the breakpoint values used to place water heaters into bins for uniform energy factor testing presented in the NOPR are appropriate for tests conducted at 135 °F, but acknowledges that some adjustments may be needed for tests conducted at 125 °F since first-hour rating values may change at this temperature. To better account for the change in the first-hour rating procedure, DOE used the expanded set of available experimental data to reassess the proposed breakpoint values of first-hour ratings for placing water heaters into sizing bins for the simulated-use test. DOE examined different regressions using the data submitted by Rheem and those collected by the Department and found that the ratings at 125 °F and those at 135 °F could be modeled as functions of storage volume and the product of input rate and recovery efficiency. The recovery efficiency for data presented by Rheem was estimated based on the description of the water heater being tested. These regressions were then used to determine what breakpoint values would result in nearly the same classification for a particular water heater tested at 125 °F as it would have when tested at 135 °F, based on its storage volume, recovery efficiency, and input rate. Based on this analysis, DOE decreased the breakpoint values for each size classification for testing at 125 °F under the new test procedure, as compared to the breakpoint values proposed in the NOPR.[13] The new limits of first-hour ratings (FHR) for each category are as follows:

Very Small: FHR < 18 gallons
Low: 18 <= FHR < 51 gallons
Medium: 51 <= FHR < 75 gallons
High: FHR >= 75 gallons

For the first-hour rating test, DOE proposed in the November 2013 NOPR that draws would terminate when the outlet temperature drops 15 °F (8.3 °C) from its maximum outlet temperature during the draw, as opposed to the drop of 25 °F (13.9 °C) implemented in the current test procedure. This change would ensure that water delivered meets the nominal useful temperature of 110 °F (43.3 °C). AET and AIM supported this proposal. (AET, No. 58 at p. 6; AIM, No. 72 at p. 1) AET suggested that water delivered at a temperature lower than the minimum useful temperature of 110 °F should not be counted in the first-hour rating test. AIM suggested that useful hot water delivered be measured separately from total water delivered. AET and AIM also suggested that water delivered below 110 °F should not be counted as useful delivered hot water in the 24-hour simulated use test. (AET No. 58 at p. 7; AIM No. 72 at p.1)

DOE concludes that the lower temperature limit of useful hot water at 110 °F is appropriate for the first-hour rating test and establishes that draws during the test will terminate when the delivery temperature drops to 15 °F below the outlet water temperature (which is nominally 125 °F), resulting in a draw termination temperature of approximately 110 °F for draws during the first-hour test. For the simulated-use test, however, DOE does not restrict outlet water temperature to at or above 110 °F. While it strongly considered the comments made by AET and AIM in this regard, in DOE's view, the simulated-use test, which provides a measure of energy efficiency rather than delivery capability, is best conducted without regard to water outlet temperature. A standard cutoff temperature of 110 °F is necessary for the first-hour rating test in order to determine the appropriate draw pattern, but no minimum temperature is necessary to estimate energy efficiency. Although DOE has selected its draw patterns to ensure that a water heater can deliver hot water during all draws, DOE recognizes that there may be cases where water heaters on the lower end of the capacity limit in each bin deliver water at a lower temperature than a consumer might desire. In these cases, DOE believes that accounting for water delivered at temperatures below 110 °F would be representative of water heater energy performance in the field. DOE uses correction factors in the test procedure's calculation routines to adjust the daily energy consumption to estimate energy consumption at a nominal outlet temperature of 125 °F since daily energy consumption will differ based on the outlet temperature of the water provided.

As noted above, in addition to proposing to change the temperature setting at which the test occurs, DOE also proposed in the November 2013 NOPR to change the methodology for setting the temperature of storage-type units to rely on outlet water temperature rather than mean tank temperature. For water heaters with a single thermostat, DOE proposed to specify a set point based on the outlet water temperature during a draw. For water heaters with multiple thermostats, DOE proposed to maintain the procedure currently prescribed in the residential water heater test method, which specifies the set point based on water temperature inside the tank. 78 FR 66202, 66219–20 (Nov. 4, 2013).

In response, DOE received three comments that supported the proposed approach for specifying the set point based on the temperature of delivered water for water heaters with a single thermostat in the tank. However these commenters argued that the same approach should be applied for water heaters with multiple thermostats. (AET, HTP, A.O. Smith) Specifically, AET and HTP cautioned that the terminology used in the NOPR that provides a procedure for water heaters with multiple ''thermostats'' could be problematic because some water heaters utilize multiple temperature sensors (*i.e.,* thermostats) that are not available to the user for modifying the delivery temperature but that are instead installed to relay data to a single controller that determines whether or not to activate heating. (AET No. 58 at p. 2; HTP No. 59 at p. 3). AET and HTP both submitted recommendations for setting the temperature controllers on water heaters with multiple control points. (AET No. 58 at p. 14; HTP No. 59 at p. 4) AET urged DOE to utilize the first-hour rating test to verify that the temperature controllers are set to their proper value. According to AET, the temperature controls on a unit with multiple controllers would be determined to be within their proper settings if all of the following conditions are met: (1) At least 50 percent of the water drawn during the first draw of the first-hour rating test was delivered at a temperature between 120 °F and 130 °F; (2) no water is delivered with a temperature above 130 °F during the first-hour rating test; and (3) the initial delivery temperature of second and subsequent draws of the first-hour rating test is between 120 °F and 130 °F. AET asserts that, if these three conditions are met, then the water heater has the correct set-point and the results from the temperature set-point test can be used to determine the first-hour rating. On this topic, HTP suggested a method that progressively disables the thermostats, and uses draws of one-fourth of the total volume, taken after full recovery of each of the heat inputs being controlled by the active thermostats, to determine if the delivery temperature falls within the requisite 125 °F +/− 5 °F range. If the water heater does not achieve the required delivery temperature within five iterations, the test laboratory would resort to the technique proposed in the NOPR.

[13] In the November 2013 NOPR, DOE proposed the following breakpoints for each size classification for testing at 125 °F. Point-of-use (since renamed ''very small''): < 20 gallons; low: 20 <= FHR < 55 gallons; medium: 55 <= FHR < 80 gallons; and high: >= 80 gallons. 78 FR 66202, 66235 (Nov. 4, 2013).

DOE also received several comments opposed to the proposed approach. DOE received one comment (Rheem) that opposed the approach of specifying a set point for a water heater with a single thermostat in the tank based on outlet temperature, arguing that this method mischaracterizes the stored energy inside the tank. (Rheem No. 69 at p. 5) DOE does not agree with this claim since the stored energy inside the tank is measured in the proposed procedure in the same manner as is done in the current procedure and because setting the outlet temperature or stored water temperature is independent of the determination of stored energy. AHRI and Giant stated that they do not agree with the proposed method because ''the method used when the model has more than one thermostat should follow the basic principles of the procedure for setting thermostats in the current test method.'' (AHRI No. 75 at p.4; Giant No. 76 at p.3) On the point raised by AHRI and Giant, DOE notes that the method for models with more than one thermostat proposed in the November 2013 NOPR already matches the approach specified in the current test method.

After careful consideration of the comments, DOE has decided to adopt several changes to the method to determine set point temperature for storage-type water heaters. First, in response to comments regarding the use of the terminology ''thermostat,'' DOE has changed the description from thermostat to ''temperature controller'' and has added a definition of temperature controller as ''a device that is available to the user to adjust the temperature of the water inside a storage-type water heater or the outlet water temperature.'' This change in terminology should eliminate any confusion on the part of the user of the test procedure between the user-accessible temperature controls and temperature sensors that are used in the water heater but may not be directly accessible to the user for making temperature adjustments.

Second, DOE has decided to maintain its stated approach in the NOPR for setting the temperature for water heaters with a single temperature controller. In the final rule, DOE specifies that the set point be based on outlet water temperature. DOE determined that some water heaters would be disadvantaged by requiring an average tank temperature of 125 °F—due to stratification, a tank with an average temperature of 125 °F would deliver water at a temperature higher than 125 °F. Such a setting could have an unrepresentative detrimental effect on efficiency compared to its intended operation in the field if the design of the water heating system relies on the average temperature of the stored water being at a lower temperature than the temperature of the water delivered to the user.

Third, DOE incorporates the method suggested by AET to specify the set point of a water heater with multiple temperature controllers because it can be performed in conjunction with the first-hour rating test. However, DOE has modified one aspect of AET's suggested method by allowing water delivered during a final draw of the first-hour rating test that begins at the end of the test to fall below 120 °F because the water heater may not have recovered fully when the final draw is initiated. This approach ensures proper temperature settings and will be less burdensome than the alternate technique proposed by HTP because it can be performed in conjunction with the first-hour rating test.

Finally, DOE eliminates normalization of the daily water-heating energy consumption to a nominal stored water temperature, as provided in the current test procedure. DOE received two comments recommending that, because of the proposed technique to base the temperature setting of the water heater on the outlet water temperature, the test procedure should not normalize the energy consumption of any storage water heater to a nominal stored water temperature of 125 °F. (AET No. 58 at p. 14; SMT No. 66 at p. 3) AET indicated that normalizing to a nominal stored water temperature penalizes advanced control technologies that manipulate storage temperature to reduce heat losses and improve performance. SMT commented that some water heater models are designed to operate with stratified tanks and that many utilize control algorithms that purposely manage the water temperature at the middle and lower levels differently from the top of the tank. DOE agrees with these comments. DOE is concerned that the temperature setting on the water heater could be lowered during the simulated-use test to an unrealistic value that would result in delivered water that is below a usable level. To avoid this situation, the final rule provides that the temperature control settings shall not be changed for the duration of the delivery capacity test and the simulated-use test once they are determined pursuant to the test procedure. Additionally, the final rule includes language that will allow a test laboratory to verify that the temperature settings are appropriate throughout the test by conducting a second 24-hour simulated-use test immediately after the test used to determine the uniform energy factor and with an identical draw pattern. If the average delivered temperature during this second 24-hour test is within the temperature bounds specified by the test procedure, then the temperature control scheme meets the requirements of the test procedure in providing the required outlet water temperature.

2. Ambient Temperature and Relative Humidity

The residential water heater test procedure requires that testing be performed in an environment with an ambient air temperature fixed at 67.5 °F ± 2.5 °F (19.7 °C ± 1.4 °C). 10 CFR part 430, subpart B, appendix E, section 2.2. For heat pump water heaters, however, the environmental conditions are more tightly constrained, with an ambient air temperature requirement of 67.5 °F ± 1 °F (19.7 °C ± 0.6 °C) and a relative humidity requirement of 50 percent ± 1 percent. *Id.* These specifications for heat pump water heaters reflect the fact that heat pump water heater energy use is highly dependent on the ambient temperature and relative humidity. Because water heaters are placed in a wide variety of locations within and outside of a home, and given the large impact of these factors on heat pump water heater efficiency, DOE considered potential revisions to the ambient air test conditions set forth in the DOE test procedure in order to assess whether the currently-specified conditions are representative of conditions typically encountered in residential installations.

In the November 2013 NOPR, DOE proposed not to change the current ambient dry bulb temperature of between 65 °F and 70 °F when testing water heaters other than heat pump water heaters and at 67.5 °F ± 1 °F when testing heat pump water heaters. DOE also proposed to include the current relative humidity of 50 percent for heat pump water heaters, but to relax the tolerance to ± 2 percent relative humidity. DOE believes these conditions are representative of typical field conditions encountered by water heaters installed in the U.S. and has not found any data to justify changing these conditions. DOE proposed to relax the tolerance for relative humidity because research indicates that commonly-used, laboratory-grade relative humidity sensors have uncertainties on the order of 1 to 1.5 percent (78 FR 66202, 66220 (Nov. 4, 2013)), and the tolerance cannot exceed the accuracy of the measuring equipment. It should be noted that the relative humidity can be obtained from measurements of dry bulb and wet bulb

temperatures and the determination of relative humidity through these temperature measurements would result in a measure of relative humidity with much lower uncertainty because dry bulb and wet bulb temperatures can be measured with high accuracy. However, most laboratories use relative humidity sensors that provide an accurate measurement of relative humidity through a less burdensome method. DOE received one comment from SMT suggesting that imposing the same dry bulb air temperature for all water heaters that is imposed for heat pump water heaters could eliminate the necessity of correcting the energy consumption for differences between the measured air temperature and the nominal temperature. (SMT No. 66 at p.3) DOE is not adopting this recommendation because it may necessitate significant changes in laboratory environmental conditioning equipment that would be very costly to manufacturers and testing laboratories. DOE believes the current method for accounting for ambient temperature allows for sufficiently accurate test results.

Regarding heat pump water heaters, NEEA and NPCC urged DOE to require testing under a variety of conditions due to differing average temperature and humidity conditions found in the northern climates. (NEEA and NPCC, No. 64 at p. 10) HTP submitted a comment stating that heat pump water heaters should be tested at a range of ambient conditions due to their sensitivity to temperature and humidity. (HTP, No. 59 at pp. 6–7) The Joint Comment suggested a representative temperature of 50 °F ''with appropriately high humidity levels,'' thereby reflecting installations in cool basements and garages. (Joint Comment, No. 77 at p. 5)

After carefully considering these comments, DOE has decided to maintain the current ambient dry bulb temperature of 67.5 °F ± 1 °F and adopt the proposed relative humidity of 50 percent ± 2 percent for heat pump water heaters. DOE recognizes that regional differences in ambient dry bulb temperature and relative humidity exist and that these differences can have an effect on the efficiency of heat pump water heaters. However, DOE has determined that the conditions established in this final rule are representative of the country as a whole and that testing of heat pump water heaters at various temperature and humidity conditions is unnecessary to determine the efficiency under a representative set of conditions. DOE also notes that adding multiple rating points for heat pump water heaters would increase test burden significantly.

3. Laboratory Airflow

The existing test procedure specifies that the water heater shall be set up in an area that is protected from drafts. To clarify this statement, DOE proposed in the November 2013 NOPR to require that the area be protected from drafts of more than 50 ft/min (2.5 m/s). 78 FR 66202, 66220 (Nov. 4, 2013). This value is in accordance with specifications in Canadian Standard 745–03, ''Energy Efficiency of Electric Storage Tank Water Heaters and Heat Pump Water Heaters.'' DOE did not receive any comments opposing this proposal, but the Department did receive one comment indicating that a typographical error was present in the NOPR's conversion from ft/min to m/s. (A.O. Smith No. 62 at p. 5) DOE is adopting the provision in its corrected form, which requires that the area be protected from drafts of more than 50 ft/min (0.25 m/s).

F. Storage Tank Pre-Conditioning

In the November 2013 NOPR, DOE tentatively concluded that initiating draw patterns on two consecutive days, with measurements only taking place during the second 24-hour period would lead to more consistent results since the state of the water heater at the beginning of the 24-hour test period on the second day will be similar to that at the end of that test period. 78 FR 66202, 66221 (Nov. 4, 2013). Thus, DOE tentatively proposed to require storage water heaters to be pre-conditioned in this manner.

DOE received ten comments in response to the November 2013 NOPR regarding the proposed water heater pre-conditioning requirements. AET and the Joint Comment stated there was no significant burden associated with a 24-hour simulated-use-test preconditioning. However, AHRI, A.O. Smith, Giant, HTP, NEEA and NPCC, Rheem, and SMT stated that there is a significant burden associated with this requirement. (AET, No. 58 at p. 12; AHRI, No. 75 at p. 3; A.O. Smith, No. 62 at p. 3; Giant, No. 76 at p. 3; HTP, No. 59 at p. 2; NEEA and NPCC, No. 64 at p. 4; Joint Comment, No. 77 at p. 6; Rheem, No. 69 at p. 4) Bradford White (referring to comments submitted by AHRI in response to the January 2013 RFI that suggested the adoption of the pre-conditioning period proposed in the NOPR) commented that the AHRI comments were originally proposed in an effort to remove use of an internal tank temperature probe, which is no longer included in the test procedure. (Bradford White, No. 61 at p. 9) Eight commenters (AHRI, A.O. Smith, Bradford White, Giant, HTP, NEEA and NPCC, Joint Comment, Rheem) recommended continuing the use of the current preconditioning procedures. DOE notes that these commenters include AHRI, the commenter that originally suggested the 24-hour simulated-use-preconditioning. (AHRI, No. 75 at p. 3; A.O. Smith, No. 62 at p. 3; Bradford White, No. 61 at p. 9; Giant, No. 76 at p. 3; HTP, No. 59 at p. 2; NEEA and NPCC, No. 64 at p. 4; Joint Comment, No. 77 at p. 6; Rheem, No. 69 at p. 4)

DOE has considered these comments and has determined that the added burden of mandating a 24-hour preconditioning as described above outweighs the potential benefits that could be provided by such an approach. However, DOE has determined that some specification of test preparation is needed to improve the reproducibility of the test results. First, DOE has found that a storage water heater must be maintained with its stored water at a temperature typically seen during normal operation for a period of time (a ''soak-in period'') prior to the start of any test to ensure that the materials making up the water heater reach a relatively steady temperature. Comments from the December 2013 Public Meeting indicated that such an approach is currently a best practice in testing water heaters and that this soak-in period can be conducted while the water heater is not connected to a test apparatus. (Public Meeting Transcript, No. 81 at p. 82) This latter point reduces the need for an additional test apparatus to maintain the rate of testing that is currently achieved in laboratories and will, therefore, minimize the need to purchase additional test equipment to meet the requirements of the new test procedure. After a computational analysis of heat transfer through the walls of a storage water heater, DOE has determined that a soak-in period of at least 12 hours will minimize transient heat transfer effects. Therefore, DOE adopts a requirement that a storage water heater (including heat pump water heaters with storage volume) sit in an idle state (*i.e.,* no water draws) with water stored in it for a minimum of 12 hours following the end of recovery from a cold start prior to conducting either a first-hour rating test or a simulated-use test.

Second, DOE has found that a water heater must not undergo a recovery immediately prior to the start of the 24-hour simulated-use test because the recovery will add significant

uncertainty to the critical measurement of average tank temperature at the start of the test. Consequently, DOE adopts a requirement that the 24-hour simulated-use test be preceded by at least a one-hour period during which all heat sources to the water in the tank do not energize. DOE concludes that incorporating these requirements will help ensure reproducible test results without being unduly burdensome.

G. Operational Mode Selection

In the November 2013 NOPR, DOE noted that heat pump water heaters that have recently entered the market typically have multiple operational modes and that selection of the operational mode could impact the results of energy efficiency testing. 78 FR 66202, 66234 (Nov. 4, 2013). As a result, DOE proposed that water heaters should be tested under the default or ''out-of-the-box'' mode of operation when both obtaining the first-hour rating and determining the energy factor. In addition, DOE proposed several clarifications for testing of units with multiple operational modes but no default mode. The clarifications are consistent with guidance issued by DOE on June 12, 2012 (*see: http://www1.eere.energy.gov/guidance/detail_search.aspx?IDQuestion=623&pid=2&spid=1).* DOE did not receive any comments related to this proposal in response to the November 2013 NOPR and adopts the proposed requirements without change.

H. Annual Energy Consumption Calculation

The annual energy consumption is calculated for residential water heaters in the existing test procedure based on the daily energy consumption multiplied by 365 days. As discussed in the November 2013 NOPR, AHRI submitted a letter to the FTC on September 16, 2013, pointing out that calculating the annual energy consumption based on the daily energy consumption can lead to differing annual energy consumption, and consequently, differing estimated yearly operating costs, for different water heater models with the same energy factor rating. 78 FR 66202, 66220–21 (Nov. 4, 2013). AHRI provided an example of two water heaters with differing daily energy consumption values but with energy factor values that would round to the same value based on the DOE rounding requirements provided in 10 CFR 430.23(e). AHRI stated that having slightly different yearly operating cost estimates for two water heaters with the same efficiency rating can be confusing to consumers and somewhat misleading based on the accuracy of the test method. AHRI suggested revising the calculation of the annual energy consumption so that it is based on the energy factor rating.

In the November 2013 NOPR, DOE proposed to adopt the calculation method suggested by AHRI for annual energy consumption, which is based on the nominal energy consumed during the test and the energy factor rating rather than the daily energy consumption. *Id.* at 66221. NEEA and NPCC strongly opposed any calculation of annual energy use for water heaters, arguing that the calculation of annual energy use is misleading in a large number of instances due to wide variations in annual household hot water use. (NEEA and NPCC, No. 64 at p. 16)

Although DOE agrees with NEEA and NPCC that the actual annual energy consumption of water heaters can vary widely based on variations in field conditions, DOE believes that calculating an estimated annual energy consumption based on the results of the test procedure can provide consumers with valuable information for comparing two water heaters under a standard set of conditions (*i.e.,* those conditions defined in the DOE test procedure). DOE believes that this additional metric can provide consumers who are unfamiliar with the uniform energy factor metric with a more familiar and easier-to-understand metric for comparing water heater performance. For this reason, DOE chooses to retain the calculation of annual energy consumption proposed in the November 2013 NOPR.

I. Conversion of Existing Energy Factor Ratings

AEMTCA amended EPCA to require that, along with developing a uniform descriptor, DOE must also develop a mathematical conversion factor to translate the results based upon use of the efficiency metric under the existing test procedure to the new uniform descriptor. (42 U.S.C. 6295(e)(5)(E)) AEMTCA provided that a manufacturer may apply the conversion factor to rerate existing models of covered water heaters manufactured prior to the effective date of the final rule establishing the uniform descriptor. Further, the conversion factor must not affect the minimum efficiency requirements for covered water heaters, and, as a result, would not lead to a change in measured energy efficiency for existing products. DOE interprets these requirements to mean that DOE must translate existing ratings from the current metrics to the new metric, while maintaining the stringency of the current standards.

In response to the November 2013 NOPR, DOE received three comments (AHRI, BWC, Joint Comment) regarding the conversion of existing ratings. (AHRI, No. 75 at p. 6–7; BWC, No. 61 at p. 7; Joint Comment, No. 77 at p. 2) AHRI and BWC suggested water heater types to test and urged DOE to release a schedule and process for the development of the conversion factor as soon as possible. The Joint Comment suggested that the sensitivity of the energy factor to draw pattern should be investigated and that systematic differences between ''old'' and ''new'' values were expected for several technologies.

DOE notes these comments regarding the conversion factor and will consider them fully once the test procedure is finalized to assist in developing the conversion factor. DOE plans to conduct a separate rulemaking to establish the conversion factor once the test method is finalized. DOE also plans to translate its current energy conservation standards to equivalent standards denominated in the new uniform efficiency metric in a separate rulemaking. Should it become apparent in the rulemaking to establish the conversion factor that changes may be required in the test procedure, DOE will address these issues at that time.

J. Full Fuel Cycle

In response to the November 2013 NOPR, DOE received additional comments related to source-based metrics. EEI stated that, consistent with other Federal laws, any new descriptor or conversion factor should only be based on point-of-use metrics. (EEI, No. 63 at p. 4) AGA and NPGA supported a metric based on the full fuel cycle that would provide a complete accounting of energy consumption from extraction, processing, and transportation of energy. (AGA, No. 68 at p. 1; NPGA, No. 60 at p. 1)

In the November 2013 NOPR, DOE responded in detail to similar concerns brought forth by stakeholders in response to the January 2013 RFI. In short, DOE reviewed the proposed water heater test procedure in relation to the Department's newly established full fuel cycle (FFC) policy, and tentatively concluded that no substantive amendments are needed to the water heater test procedure to accommodate the FFC policy. 78 FR 66202, 66222 (Nov. 4, 2013). However, for the purposes of representations, DOE tentatively concluded that some small improvements to the water heater test procedure are appropriate to

accommodate the FFC policy. DOE proposed in the November 2013 NOPR to define new terms in the test procedure to make it possible to quantify daily electric energy consumption separately from fossil fuel energy consumption and to add separate estimates of annual fossil fuel energy consumption and annual electrical energy consumption in addition to the overall annual energy consumption. This separation allows the user of the test procedure to estimate the operational cost of water heaters that use both fossil fuel and electricity based on the prices of those different energy sources. From a consumer's perspective, annual operating cost is particularly useful for the products that have dual fuel inputs. DOE believes this consumer cost perspective is reasonably reflected in the FFC (*i.e.,* the source/site factors recommended by the commenter are essentially numerically identical to the fuel cost ratios published biennially by the Secretary).

In response to the November 2013 NOPR, DOE received seven comments regarding the addition of terms to quantify daily electric energy consumption separately from fossil fuel energy consumption and adding separate estimates of annual fossil fuel energy consumption and annual electrical energy consumption in addition to the overall annual energy consumption. Four commenters supported the addition of these terms (AET, AIM, Joint Comment, NPGA), while three commenters did not (EEI, HTP, AHRI). (AET, No. 58 at p. 15; AIM, No. 74 at p. 1; EEI, No. 63 at p. 4; HTP, No. 59 at p. 5; Joint Comment, No. 77 at p. 7; NPGA, No. 60 at p. 1–2; AHRI No. 80 at p. 2) EEI stated that it is not clear whether a separation by fuel type will be meaningful to the customer; HTP and AHRI argued that these terms are unnecessary.

After considering these comments, DOE has decided to include terms to quantify daily electric energy consumption separately from fossil fuel energy consumption and to add separate estimates of annual fossil fuel energy consumption and annual electrical energy consumption (in addition to the overall annual energy consumption). DOE believes these added terms will provide consumers with more accurate information for comparing various water heating technologies without significantly adding to the overall test burden.

K. Certification, Compliance, and Enforcement Issues

1. Storage Volume Requirements

In the November 2013 NOPR, DOE proposed to make several changes to its certification, compliance, and enforcement regulations at 10 CFR part 429. First, DOE proposed to add requirements to 10 CFR 429.17 that the rated value of storage tank volume must equal the mean of the measured storage volumes of the units in the sample. 78 FR 66202, 66223 (Nov. 4, 2013). DOE notes that there are currently no requirements from the Department limiting the allowable difference between the tested (*i.e.,* measured) storage volume and the ''rated'' storage volume that is specified by the manufacturer. DOE has tested 65 residential storage-type water heaters, including 44 gas-fired water heaters, 19 electric water heaters, and 2 oil-fired water heaters. Through this testing, DOE has found that water heaters are consistently rated at storage volumes above their measured storage volume. For gas-fired water heaters, the rated volume ranged from 1.5 percent to 15.6 percent above the measured volume, with the mean being 4.8 percent. For electric water heaters, the rated volume ranged from 5.0 to 10.6 percent above the measured volume, with the mean being 9.4 percent. DOE notes that its minimum energy conservation standards are based on the rated storage volume and decrease as rated storage volume increases. DOE believes consumers often look to storage volume as a key factor in choosing a storage water heater. Consequently, DOE proposed to adopt requirements that the rated value must be the mean of the measured values. In addition, DOE proposed to specify that for DOE-initiated testing, the measured storage volume must be within five percent of the rated volume in order to use the rated storage volume in downstream calculations. *Id.* If the measured storage volume is more than five percent different than the rated value, then DOE proposed to use the measured value in downstream calculations. DOE proposed to specify similar requirements for residential-duty commercial water heaters.

AHRI, A.O. Smith, Bradford White, HTP, the Joint Comment, and Rheem opposed the proposal to require that the rated storage value be the mean of the measured values. (AHRI, No. 75 at p. 4; A.O. Smith, No. 62 at p. 3; Bradford White, No. 61 at p. 10; HTP, No. 59 at p. 8; Joint Comment, No. 77 at p. 3; Rheem, No. 69 at p. 6) AHRI argued that the proposal is unnecessary and not an efficiency-related matter, but a safety matter. As such, AHRI argued that it is outside the scope of the DOE's authority and has been adequately addressed in ANSI Z21 and the UL standards for water heaters. AHRI stated that there are currently no units on the market that would allow the difference between rated and measured volume to dodge the minimum efficiency standards. A.O. Smith and Bradford White noted that adding this requirement would make a water heater which was legal under the old test procedure illegal, which in turn would necessitate updating the minimum efficiency standards. HTP stated that the five-percent tolerance on the measured storage volume as compared to rated storage volume is too stringent and would impose a significant re-design burden upon manufacturers. HTP instead suggests a ten-percent tolerance to reduce the manufacturer's burden.

After carefully considering these comments, DOE has decided to require that the rated storage volume be based on the mean of the measured values. The efficiency of a water heater is clearly related to the rated storage volume and, therefore, within DOE's authority to regulate. DOE seeks to eliminate any potential incentives for manufacturers to continue the current practice of exaggerating the storage volume of water heaters currently on the market by inflating the rated volume as compared to the actual measured volume. While DOE acknowledges AHRI's assessment that no current water heaters on the market could evade minimum efficiency standards, this does not rule out the possibility that future water heaters could do so; the revised approach adopted in this final rule addresses this concern going forward. Regarding the comment from A.O. Smith and Bradford White that adding this requirement would make a water heater which was legal under the old test procedure illegal, DOE notes that if AHRI's comment about the current water heater market is correct, the difference between rated and measured volume should not cause any water heaters to be subject to different energy conservation standards, thereby rendering such concerns theoretical. Furthermore, there will be a mathematical conversion for water heater models that are currently compliant to transition from results generated under the old test procedure to the new test procedure. Additionally, DOE-initiated testing will require that all measured storage volumes be within ±5 percent of the rated storage volume to be considered valid. DOE agrees with

HTP that the 5 percent tolerance will result in manufacturers having to rerate certain models at an additional burden. However, DOE has concluded that any tolerance greater than 5 percent will not have the desired effect of harmonizing rated and measured storage volume values, and it is likely that a significant gap would persist between the values if a larger tolerance were adopted. If an invalid storage volume is found, the measured storage volume will be used in determining the applicable minimum energy conservation standard and calculations within the test procedure.

2. First-Hour Rating and Maximum GPM Requirements

Because the first-hour and maximum GPM ratings will determine the applicable draw pattern for use during the uniform energy factor test, DOE proposed in the November 2013 NOPR to include rating requirements for those values. 78 FR 66202, 66223 (Nov. 4, 2013). DOE proposed that the first-hour rating or maximum GPM rating, as applicable, must be the mean of the measured values of the sample used for certifying the basic model's efficiency. For DOE testing, the rated value will be considered valid if it is within five percent of the measured value. In such a case, DOE proposed that the rated value would be used for the purposes of choosing the appropriate draw pattern for the uniform energy factor test. In the case of an invalid rating (*i.e.,* the first-hour rating or maximum GPM rating is more than five percent different from the measured value), DOE proposed to use the measured value to determine the applicable draw pattern for the uniform energy factor test. DOE did not receive any comments objecting to these proposals, and, thus, DOE is adopting them in this final rule.

3. Ratings for Untested Models

In reviewing the current test procedure, DOE has concluded that 10 CFR part 430, subpart B, appendix E, section 7.0, ''Ratings for Untested Models,'' is more appropriately addressed in 10 CFR part 429, which deals with requirements for certification of residential water heaters, than in the test procedure. In the November 2013 NOPR, DOE proposed to remove this section from Appendix E and place a similar section in 10 CFR 429.17. 78 FR 66202, 66223–24 (Nov. 4, 2013). DOE proposed to maintain the same requirements for gas water heaters in 10 CFR 429.17 that were previously in section 7.0, which allow units using propane gas that have an input rating within 10 percent of an otherwise identical natural gas unit to use the rating for the natural gas unit in lieu of separate testing. DOE did not receive any comments related to this proposal, and thus, DOE adopts it in this final rule; however, DOE has moved the provision to 10 CFR 429.70 to reflect that this is an alternative method of determining efficiency (in lieu of testing).

DOE also proposed to eliminate the provisions for electric water heaters that currently allow a manufacturer of electric water heaters that are identical except with different input ratings to designate a standard input rating at which to test the water heater. 78 FR 66202, 66224 (Nov. 4, 2013). Under the current procedure, the manufacturer of electric water heaters may designate the standard input rating that would apply to all models that are identical with the exception of the power input to the heating element and test only at a single standard input rating. It also provides instructions for specifying the first-hour rating of units with higher and lower input ratings than the standard rating. The procedure also provides that the energy factor can be assumed to be the same across all input ratings. As noted above, DOE proposed to remove these provisions due to the proposed revisions in the test method for the first-hour rating and energy factor tests. The first-hour rating would be expected to vary based on the power input to the electric heating element. Under the revised test procedure, the applicable draw pattern for the uniform energy factor test is based on the first-hour rating. Thus, the first-hour rating must be accurate for the tested model to ensure accurate test results for the uniform energy factor test.

In response to the November 2013 NOPR, DOE received five comments (AHRI, BWC, Giant, Joint Comment, Rheem) opposing the proposal to remove the manufacturer's ability to designate electric water heaters that are identical except for their respective input ratings as having a standard input, and one comment was received from HTP suggesting alternate methods of testing the units with different input ratings. (AHRI, No. 75 at p. 7; BWC, No. 61 at p. 10–11; Giant, No. 76 at p. 3–4; HTP, No. 79 at p. 1–6; Joint Comment, No. 77 at p. 7; Rheem, No. 69 at p. 7). The five opposing comments stated that there would be a significant undue test burden associated with testing each model with a different input rating. Id. AHRI and Giant stated that the only case where a different input rating might be a concern is if the change in input rating results in a lower first-hour rating such that the unit would be tested under a different draw pattern than the unit with a ''standard'' input rating. (AHRI, No. 75 at p. 7; Giant, No. 76 at p. 3–4).

DOE agrees that removing the provisions for rating electric water heaters with different input ratings could cause significant additional test burden for manufacturers. Thus, DOE is adopting the following requirements, which are roughly based on the method recommended by HTP to lessen burden while still ensuring that the ratings are representative of a model's efficiency and capacity. DOE is adopting provisions in 10 CFR 429.70 that will allow manufacturers to use the first-hour rating and uniform energy factor determined by testing one basic model to rate other basic models, in certain, limited circumstances. Untested basic models with input ratings higher than the rating of the tested basic model can be assumed to have the same first-hour rating and uniform energy factor and may be rated as such. For untested basic models that only differ from the tested basic model in that they contain heating elements with input ratings below the tested basic model, the untested basic model with the lowest input rating for all heating elements must be tested for first-hour rating. If that untested basic model has a first-hour rating that would group it in the same draw pattern bin as the tested basic model, then all basic models with lower input ratings than the tested basic model may be assumed to have the same uniform energy factor as the tested basic model. These untested basic models can be assigned a first-hour rating equivalent to the volume removed in the first draw of the first-hour rating test of the tested basic model of electric water heater. However, if the unit with the lowest input rating has a first-hour rating that would result in classification in a draw pattern with a lower total volume drawn per day for the simulated-use test, the unit must be tested according to that lower draw pattern. At this point, the manufacturer may choose to test a second basic model that would represent water heaters in the lower sizing bin and apply the same principles noted above to determine the uniform energy factor and first-hour rating.

DOE notes that the alternative efficiency determination method (AEDM) provisions for these consumer water heaters and residential-duty commercial water heaters are quite different from AEDM provisions for other types of covered products and equipment for which use of an AEDM is authorized. Specifically, these AEDM provisions do not permit any type of modeling or calculations of efficiency; they only permit use of a rating determined by testing to be used for

other basic models that meet certain criteria. In addition, DOE notes that the tested basic model will be indicated in a certification report with the number of units tested, while the untested basic models will be indicated in a certification report as having been certified using an AEDM.

L. Reference Standards

DOE's test procedure for residential water heaters currently references two industry standards: (1) American Society for Testing and Measurement (ASTM) D2156–80, ''Smoke Density in Flue Gases from Burning Distillate Fuels, Test Method for'' and (2) ASHRAE Standard 41.1–1986, ''Standard Measurement Guide: Section on Temperature Measurements.''

DOE retains these references in the uniform efficiency descriptor test method, but updates the referenced standards to the most recent versions: (1) ASTM D2156–09, ''Standard Test Method for Smoke Density in Flue Gases from Burning Distillate Fuels'' and (2) ASHRAE Standard 41.1–1986 (RA2006), ''Standard Method for Temperature Measurement.'' For the November 2013 NOPR, DOE reviewed both of the updated standards and concluded that their adoption would not substantially impact the revised test method. 78 FR 66202, 66224 (Nov. 4, 2013). DOE did not receive any comments on this issue in response to the NOPR, and consequently, DOE incorporates these industry standards by reference into DOE's regulations for the water heaters test procedure.

M. Compliance With Other EPCA Requirements

As mentioned above, in amending a test procedure, EPCA directs DOE to determine to what extent, if any, the test procedure would alter the measured energy efficiency or measured energy use of a covered product. (42 U.S.C. 6293(e)(1)) If the amended test procedure alters the measured energy efficiency or measured energy use, the Secretary must amend the applicable energy conservation standard to the extent the amended test procedure changes the energy efficiency of products that minimally comply with the existing standard. (42 U.S.C. 6293(e)(2)) The current energy conservation standards for residential water heaters are based on energy factor, and the energy conservation standards for commercial water heaters are based on thermal efficiency and standby loss. DOE believes that the conversion factor (or factors) required by AEMTCA (as discussed in section III.I) and developed in a subsequent rulemaking will ensure that there is no change in measured energy efficiency.

Consistent with 42 U.S.C. 6293(c), DOE typically requires that any representations of energy consumption of covered products must be based on any final amended test procedures 180 days after the publication of the test procedure final rule. However, in this instance, the statute specifically provides for an effective date of the test procedure final rule which is one year after the date of the publication of the final rule. (42 U.S.C. 6295(e)(5)(D)(ii)) In addition, AEMTCA provides for the use of a conversion factor that will apply beginning on the date of publication of the conversion factor in the **Federal Register** and ending on the later of one year after the date of publication of the conversion factor or December 31, 2015. (42 U.S.C. 6295(e)(5)(E)(v)) Thus, the test procedure final rule will become effective one year after its publication, and manufacturers may at their discretion make representations of energy efficiency based either (a) on the final amended test procedures or (b) on the previous test procedures after applying the conversion factor until such time as use of the amended test procedure is required. The current test procedures for residential water heaters are set forth at 10 CFR part 430, subpart B, appendix E as contained in 10 CFR parts 200 to 499 edition revised as of January 1, 2014. The current test procedures for commercial water heating equipment are set forth at 10 CFR 431.106 as contained in 10 CFR parts 200 to 499 edition revised as of January 1, 2014. As required by AEMTCA, the conversion factor may be used until the later of one year after the publication of the factor, or December 31, 2015, after which time all testing must be conducted in accordance with the new amended test procedure. (Note, in this final rule, DOE provides that the conversion factor may be used until December 31, 2015, but DOE will amend that date, if necessary, upon publication of the conversion factor final rule.) DOE notes that during the interim period, manufacturers must use the same version of the test procedure for all representations of energy efficiency, including certifications of compliance.

N. Other Issues

At the December 6, 2013 public meeting, AIM and EEI requested clarification on the applicability of the first-hour rating and maximum GPM test for water heaters that may have a storage volume above 2 gallons but which also have heating elements or burners that are designed to deliver a continuous flow of hot water. (Public transcript, p. 80–81, 84–86, 121–122) After considering these comments, DOE acknowledges that it may be possible to improve the test procedure's specifications as to which tests must be conducted on each water heater, so the Department is clarifying the proper implementation of the applicable tests as part of this final rule.

The proposed test procedure stated that storage water heaters should be tested to obtain a first-hour rating and that instantaneous water heaters be tested to obtain a maximum GPM rating. 78 FR 66202, 66234–36 (Nov. 4, 2013). As noted by AIM, ''flow-dominated'' or ''heat-on-demand'' water heaters exist that have very large burners but have some storage volume as a buffer. (AIM No. 70 at p. 2) DOE believes that the delivery capacity of such water heaters is best captured by a maximum GPM rating and is, thus, requiring water heaters with a heating input that is activated by the flow of water through them to be tested according to the maximum GPM test procedure regardless of storage volume. For all other storage water heaters, the first-hour rating test is to be applied to determine delivery capacity. DOE is using the term ''flow-activated'' in this final rule and is adding a definition for that term in the test procedure that is consistent with the definition of ''instantaneous water heater'' currently at 10 CFR 430.2.

For determining the uniform energy factor, DOE believes that any water heater with a storage volume greater than or equal to 2 gallons must be tested to account for the storage volume, even if they meet EPCA's definition of an instantaneous water heater, which does not limit the stored volume. (42 U.S.C. 6291(27)(B)) The reason for this determination is that changes in the stored energy in the water heater and variations in the heat loss from the water heater to the ambient can affect the uniform energy factor, and the test procedure proposed for storage water heaters captures these effects while that for instantaneous water heaters does not. While it might be possible to include such terms in the proposed test procedure for instantaneous water heaters, such a step would add no benefit for instantaneous water heaters with minimal storage volume and could be considered as adding an undue burden to the testing of those units. Therefore, DOE clarifies the applicability of the simulated-use test based on rated storage volume instead of by the terminology of ''storage'' versus ''instantaneous'' in section 5 of appendix E.

DOE also clarifies the determination of the UA value to account for situations where the maximum tank temperature is achieved immediately following the recovery following the first draw cluster. As noted above, test data suggest that starting the standby period immediately following a recovery can lead to erroneous results due to the challenges in determining the average stored water temperature at that time. DOE has adjusted the start of the period used to determine the UA so that it must begin no less than five minutes following the end of the first recovery following the first draw cluster.

IV. Procedural Issues and Regulatory Review

A. Review Under Executive Order 12866

The Office of Management and Budget has determined that test procedure rulemakings do not constitute ''significant regulatory actions'' under section 3(f) of Executive Order 12866, ''Regulatory Planning and Review,'' 58 FR 51735 (Oct. 4, 1993). Accordingly, this action was not subject to review under the Executive Order by the Office of Information and Regulatory Affairs (OIRA) in the Office of Management and Budget (OMB).

B. Review Under the Regulatory Flexibility Act

The Regulatory Flexibility Act (5 U.S.C. 601 *et seq.,* as amended by the Small Business Regulatory Enforcement Fairness Act of 1996) requires preparation of an initial regulatory flexibility analysis (IFRA) for any rule that by law must be proposed for public comment and a final regulatory flexibility analysis (FRFA) for any such rule that an agency adopts as a final rule, unless the agency certifies that the rule, if promulgated, will not have a significant economic impact on a substantial number of small entities. A regulatory flexibility analysis examines the impact of the rule on small entities and considers alternative ways of reducing negative effects. Also, as required by Executive Order 13272, ''Proper Consideration of Small Entities in Agency Rulemaking,'' 67 FR 53461 (August 16, 2002), DOE published procedures and policies on February 19, 2003, to ensure that the potential impacts of its rules on small entities are properly considered during the DOE rulemaking process. 68 FR 7990. DOE has made its procedures and policies available on the Office of the General Counsel's Web site: *http://energy.gov/gc/office-general-counsel.*

This final rule prescribes test procedure amendments used to determine compliance with energy conservation standards for residential water heaters and certain commercial water heaters. For residential water heaters and certain commercial water heaters, the amendments establish a uniform efficiency descriptor which is more representative of conditions encountered in the field (including modifications to both the test conditions and the draw patterns), and expand the scope of the test procedure to apply to certain residential water heaters and certain commercial water heaters that are currently not covered by the test procedure. DOE reviewed this final rule under the provisions of the Regulatory Flexibility Act and the policies and procedures published on February 19, 2003. 68 FR 7990.

For the manufacturers of the covered water heater products, the Small Business Administration (SBA) has set a size threshold, which defines those entities classified as ''small businesses'' for the purposes of the statute. DOE used the SBA's small business size standards to determine whether any small entities would be subject to the requirements of the rule. The SBA size standards, listed by North American Industry Classification System (NAICS) code and industry description, are codified at 13 CFR part 121 and are available at *http://www.sba.gov/content/table-small-business-size-standards.* Residential water heater manufacturing is classified under NAICS 335228—''Other Major Household Appliance Manufacturing.'' The SBA sets a threshold of 500 employees or less for an entity to be considered as a small business. Commercial water heaters are classified under NAICS 333318—''Other Commercial and Service Industry Machinery Manufacturing,'' for which SBA also sets a size threshold of 1,000 employees or fewer for being considered a small business.

DOE has identified 19 manufacturers of residential water heaters (including manufacturers of products that fall under the expanded scope) that can be considered small businesses. DOE identified seven manufacturers of ''residential-duty'' water heaters that can be considered small businesses. Six of the ''residential-duty'' water heater manufacturers also manufacture residential water heaters, so the total number of water heater manufacturers impacted by this rule would be 20. DOE's research involved reviewing several industry trade association membership directories (*e.g.,* AHRI), product databases (*e.g.,* AHRI, CEC, and ENERGY STAR databases), individual company Web sites, and marketing research tools (*e.g.,* Hoovers reports) to create a list of all domestic small business manufacturers of products covered by this rulemaking.

For the reasons explained below, DOE has concluded that the test procedure amendments contained in this final rule would not have a significant economic impact on any manufacturer, including small manufacturers.

For residential water heaters, the amendments adopted in this final rule apply primarily to the draw pattern and outlet water temperature. Under DOE's existing test procedure, manufacturers must perform a simulated-use test consisting of 6 draws of equal lengths with a water heater delivery temperature of 135 °F. This final rule will require manufacturers to perform a simulated-use test consisting of 9 to 14 draws of varied length, depending on the capacity of the water heater, at an outlet water temperature of 125 °F. The change in outlet water temperature requires no additional effort or expense for the manufacturer, because establishing the test temperature is simply a matter of choosing the appropriate setting on the water heater. Likewise, the change in the number of draws would also result in very little burden on manufacturers. The length and timing of draws for the existing test procedure are largely controlled automatically by computer control. The changes will likely result in manufacturers having to reprogram the computer test programs to account for the new draw patterns. DOE estimates that this effort would take approximately one week to program and confirm operation of the amended test. It is estimated that approximately two days of a programmer's time would be needed at a cost of $1,000, including overhead and benefits. This one-time cost is comparable to that charged by a third-party test laboratory for a single test, so it is not considered burdensome for water heater manufacturers. Since the simulated-use test takes 24 hours under both the existing and new test method, the length of the test would not change. The new test method does specify a 12-hour soak-in period prior to the 24-hour test for storage water heaters, however, which would add to the time required to conduct the test. This extra test time would not require extra personnel and would not necessitate the development of additional test platforms. DOE understands that a preconditioning period is already implemented by manufacturers as a best practice to allow the water heater to achieve operational temperature, so the added burden from the 12-hour soak-in would be minimal. In addition, these tests can be

conducted in the same facilities used for the current energy testing of these products, so there would be no additional facility costs required by the final rule.

Lastly, the only potential instrumentation upgrade required to conduct the test would be electric power and energy measuring equipment that meets the accuracy levels that have changed from ± 1 percent to ± 0.5 percent. DOE believes that equipment meeting these tolerances is already the industry standard. Purchase of a new instrument, if needed, would be expected to cost approximately $1,000.

For certain commercial water heaters included in the scope of this rulemaking, the efficiency test required for equipment would change from the thermal efficiency and standby loss tests specified in the current DOE test method, to the simulated-use test for uniform energy factor in this final rule. The uniform energy factor test is inherently more complex than the thermal efficiency and standby loss tests, and, thus, it may be more difficult to implement. However, the standby loss test takes a significant amount of time, which is comparable to the 24-hour simulated-use test. Accordingly, overall testing time should remain fairly constant. DOE understands that the complexity of the uniform energy factor test would impose additional costs on manufacturers due to the need to automate draw patterns, as compared to the thermal efficiency test. In addition, some hardware purchases may be needed to allow for computer-controlled draws of hot water that are required in a simulated use test. However, DOE notes that many commercial water heater manufacturers also manufacture residential water heaters, and may already have this equipment from testing of residential units. Nonetheless, DOE estimates that this hardware could cost approximately $1,000, assuming that the laboratory already has a computer-controlled data acquisition system to collect data during the thermal efficiency and standby loss tests currently required. DOE estimates the costs for a programmer to create a computer program that automatically controls the hot water draws would be similar to the costs above, but that the time required may be slightly longer if the program is being developed from scratch. Under such circumstances, DOE estimates that 5 days of programmer time would be needed for a cost of $2,500, including overhead and benefits.

Lastly, DOE considered the impacts on small businesses that manufacture residential water heaters that fall into categories that were previously not covered by the DOE residential water heater test procedure (*e.g.,* models with storage volumes between 2 and 20 gallons). In reviewing the market for these products, DOE did not identify any manufacturers that did not also manufacture other types of water heating equipment. Thus, DOE believes that these manufacturers would already have the needed equipment and computer programs to conduct the current DOE test. For the reasons stated previously, DOE does not believe the updates will cause significant additional burdens for these manufacturers.

Accordingly, DOE concludes and certifies that this final rule would not have a significant economic impact on a substantial number of small entities, so DOE has not prepared a regulatory flexibility analysis for this rulemaking. DOE has provided its certification and supporting statement of factual basis to the Chief Counsel for Advocacy of the SBA for review under 5 U.S.C. 605(b).

C. Review Under the Paperwork Reduction Act of 1995

Manufacturers of water heaters must certify to DOE that their products comply with all applicable energy conservation standards. In certifying compliance, manufacturers must test their products according to the DOE test procedures for water heaters, including any amendments adopted for the test procedure on the date that compliance is required. DOE has established regulations for the certification and recordkeeping requirements for all covered consumer products and commercial equipment, including residential and commercial water heaters. 76 FR 12422 (March 7, 2011). The collection-of-information requirement for the certification and recordkeeping is subject to review and approval by OMB under the Paperwork Reduction Act (PRA). This requirement has been approved by OMB under OMB control number 1910–1400. Public reporting burden for the certification is estimated to average 20 hours per response, including the time for reviewing instructions, searching existing data sources, gathering and maintaining the data needed, and completing and reviewing the collection of information.

Notwithstanding any other provision of the law, no person is required to respond to, nor shall any person be subject to a penalty for failure to comply with, a collection of information subject to the requirements of the PRA, unless that collection of information displays a currently valid OMB Control Number.

D. Review Under the National Environmental Policy Act of 1969

In this final rule, DOE amends its test procedure for residential and commercial water heaters. DOE has determined that this rule falls into a class of actions that are categorically excluded from review under the National Environmental Policy Act of 1969 (42 U.S.C. 4321 *et seq.*) and DOE's implementing regulations at 10 CFR part 1021. Specifically, this rule amends an existing rule without affecting the amount, quality or distribution of energy usage, and, therefore, will not result in any environmental impacts. Thus, this rulemaking is covered by Categorical Exclusion A5 under 10 CFR part 1021, subpart D, which applies to any rulemaking that interprets or amends an existing rule without changing the environmental effect of that rule. Accordingly, neither an environmental assessment nor an environmental impact statement is required.

E. Review Under Executive Order 13132

Executive Order 13132, ''Federalism,'' 64 FR 43255 (August 10, 1999), imposes certain requirements on agencies formulating and implementing policies or regulations that preempt State law or that have Federalism implications. The Executive Order requires agencies to examine the constitutional and statutory authority supporting any action that would limit the policymaking discretion of the States and to carefully assess the necessity for such actions. The Executive Order also requires agencies to have an accountable process to ensure meaningful and timely input by State and local officials in the development of regulatory policies that have Federalism implications. On March 14, 2000, DOE published a statement of policy describing the intergovernmental consultation process it will follow in the development of such regulations. 65 FR 13735. DOE examined this final rule and determined that it will not have a substantial direct effect on the States, on the relationship between the national government and the States, or on the distribution of power and responsibilities among the various levels of government. EPCA governs and prescribes Federal preemption of State regulations as to energy conservation for the products that are the subject of this final rule. States can petition DOE for exemption from such preemption to the extent, and based on criteria, set forth in EPCA. (42 U.S.C. 6297(d)) No further action is required by Executive Order 13132.

F. Review Under Executive Order 12988

Regarding the review of existing regulations and the promulgation of new regulations, section 3(a) of Executive Order 12988, ''Civil Justice Reform,'' 61 FR 4729 (Feb. 7, 1996), imposes on Federal agencies the general duty to adhere to the following requirements: (1) Eliminate drafting errors and ambiguity; (2) write regulations to minimize litigation; (3) provide a clear legal standard for affected conduct rather than a general standard; and (4) promote simplification and burden reduction. Regarding the review required by section 3(a), section 3(b) of Executive Order 12988 specifically requires that Executive agencies make every reasonable effort to ensure that the regulation: (1) Clearly specifies the preemptive effect, if any; (2) clearly specifies any effect on existing Federal law or regulation; (3) provides a clear legal standard for affected conduct while promoting simplification and burden reduction; (4) specifies the retroactive effect, if any; (5) adequately defines key terms; and (6) addresses other important issues affecting clarity and general draftsmanship under any guidelines issued by the Attorney General. Section 3(c) of Executive Order 12988 requires Executive agencies to review regulations in light of applicable standards in sections 3(a) and 3(b) to determine whether they are met or it is unreasonable to meet one or more of them. DOE has completed the required review and determined that, to the extent permitted by law, this final rule meets the relevant standards of Executive Order 12988.

G. Review Under the Unfunded Mandates Reform Act of 1995

Title II of the Unfunded Mandates Reform Act of 1995 (UMRA) requires each Federal agency to assess the effects of Federal regulatory actions on State, local, and Tribal governments and the private sector. Pub. L. 104–4, sec. 201 (codified at 2 U.S.C. 1531). For a regulatory action resulting in a rule that may cause the expenditure by State, local, and Tribal governments, in the aggregate, or by the private sector of $100 million or more in any one year (adjusted annually for inflation), section 202 of UMRA requires a Federal agency to publish a written statement that estimates the resulting costs, benefits, and other effects on the national economy. (2 U.S.C. 1532(a), (b)) The UMRA also requires a Federal agency to develop an effective process to permit timely input by elected officers of State, local, and Tribal governments on a ''significant intergovernmental mandate,'' and requires an agency plan for giving notice and opportunity for timely input to potentially affected small governments before establishing any requirements that might significantly or uniquely affect them. On March 18, 1997, DOE published a statement of policy on its process for intergovernmental consultation under UMRA. 62 FR 12820. (This policy is also available at *http://energy.gov/gc/office-general-counsel.*) DOE examined this final rule according to UMRA and its statement of policy and has determined that the rule contains neither an intergovernmental mandate, nor a mandate that may result in the expenditure by State, local, and Tribal governments, in the aggregate, or by the private sector, of $100 million or more in any year. Accordingly, no further assessment or analysis is required under UMRA.

H. Review Under the Treasury and General Government Appropriations Act, 1999

Section 654 of the Treasury and General Government Appropriations Act, 1999 (Pub. L. 105–277) requires Federal agencies to issue a Family Policymaking Assessment for any rule that may affect family well-being. This final rule will not have any impact on the autonomy or integrity of the family as an institution. Accordingly, DOE has concluded that it is not necessary to prepare a Family Policymaking Assessment.

I. Review Under Executive Order 12630

Pursuant to Executive Order 12630, ''Governmental Actions and Interference with Constitutionally Protected Property Rights,'' 53 FR 8859 (March 18, 1988), DOE has determined that this regulation will not result in any takings that might require compensation under the Fifth Amendment to the U.S. Constitution.

J. Review Under Treasury and General Government Appropriations Act, 2001

Section 515 of the Treasury and General Government Appropriations Act, 2001 (44 U.S.C. 3516 note) provides for agencies to review most disseminations of information to the public under information quality guidelines established by each agency pursuant to general guidelines issued by OMB. OMB's guidelines were published at 67 FR 8452 (Feb. 22, 2002), and DOE's guidelines were published at 67 FR 62446 (Oct. 7, 2002). DOE has reviewed this final rule under the OMB and DOE guidelines and has concluded that it is consistent with applicable policies in those guidelines.

K. Review Under Executive Order 13211

Executive Order 13211, ''Actions Concerning Regulations That Significantly Affect Energy Supply, Distribution, or Use,'' 66 FR 28355 (May 22, 2001), requires Federal agencies to prepare and submit to OIRA at OMB, a Statement of Energy Effects for any significant energy action. A ''significant energy action'' is defined as any action by an agency that promulgates or is expected to lead to promulgation of a final rule, and that: (1) Is a significant regulatory action under Executive Order 12866, or any successor order; and (2) is likely to have a significant adverse effect on the supply, distribution, or use of energy; or (3) is designated by the Administrator of OIRA as a significant energy action. For any significant energy action, the agency must give a detailed statement of any adverse effects on energy supply, distribution, or use if the regulation is implemented, and of reasonable alternatives to the action and their expected benefits on energy supply, distribution, and use.

This regulatory action to amend the test procedure for measuring the energy efficiency of residential and certain commercial water heaters is not a significant regulatory action under Executive Order 12866 or any successor order. Moreover, it would not have a significant adverse effect on the supply, distribution, or use of energy, nor has it been designated as a significant energy action by the Administrator of OIRA. Therefore, it is not a significant energy action, and, accordingly, DOE has not prepared a Statement of Energy Effects for this rulemaking.

L. Review Under Section 32 of the Federal Energy Administration Act of 1974

Under section 301 of the Department of Energy Organization Act (Pub. L. 95–91; 42 U.S.C. 7101 *et seq.*), DOE must comply with all laws applicable to the former Federal Energy Administration, including section 32 of the Federal Energy Administration Act of 1974 (Pub. L. 93–275), as amended by the Federal Energy Administration Authorization Act of 1977 (Pub. L. 95–70). (15 U.S.C. 788; FEAA) Section 32 essentially provides in relevant part that, where a proposed rule authorizes or requires use of commercial standards, the notice of proposed rulemaking must inform the public of the use and background of such standards. In addition, section 32(c) requires DOE to consult with the Attorney General and the Chairman of the Federal Trade Commission (FTC) concerning the

impact of the commercial or industry standards on competition.

The modifications to the test procedures addressed by this action incorporate testing methods contained in the following commercial standards: (1) ASTM D2156 09, ''Standard Test Method for Smoke Density in Flue Gases from Burning Distillate Fuels''; and (2) ASHRAE Standard 41.1–1986 (RA 2006), ''Standard Method for Temperature Measurement.'' While this test procedure is not exclusively based on these standards, components of the test procedures are adopted directly from these standards without amendment. The Department has evaluated these standards and is unable to conclude whether they fully comply with the requirements of section 32(b) of the FEAA, (*i.e.,* that they were developed in a manner that fully provides for public participation, comment, and review). DOE has consulted with the Attorney General and the Chairman of the FTC concerning the impact on competition of requiring manufacturers to use the test methods contained in these standards and has received no comments objecting to their use.

M. Congressional Notification

As required by 5 U.S.C. 801, DOE will report to Congress on the promulgation of this rule before its effective date. The report will state that it has been determined that the rule is not a ''major rule'' as defined by 5 U.S.C. 804(2).

V. Approval of the Office of the Secretary

The Secretary of Energy has approved publication of this final rule.

List of Subjects

10 CFR Part 429

Confidential business information, Energy conservation, Household appliances, Imports, Reporting and recordkeeping requirements.

10 CFR Part 430

Administrative practice and procedure, Confidential business information, Energy conservation, Household appliances, Imports, Incorporation by reference, Intergovernmental relations, Small businesses.

10 CFR Part 431

Administrative practice and procedure, Confidential business information, Test procedures, Incorporation by reference, Reporting and recordkeeping requirements.

Issued in Washington, DC, on June 27, 2014.

Kathleen B. Hogan,

Deputy Assistant Secretary for Energy Efficiency, Energy Efficiency and Renewable Energy.

For the reasons stated in the preamble, DOE amends parts 429, 430, and 431 of Chapter II, Subchapter D of Title 10, Code of Federal Regulations, as set forth below:

PART 429—CERTIFICATION, COMPLIANCE, AND ENFORCEMENT FOR CONSUMER PRODUCTS AND COMMERCIAL AND INDUSTRIAL EQUIPMENT

■ 1. The authority citation for part 429 continues to read as follows:

Authority: 42 U.S.C. 6291–6317.

■ 2. Section 429.17 is amended by:
■ a. Revising paragraphs (a) introductory text and (a)(1);
■ b. Redesignating paragraphs—
i. (a)(2)(i) introductory text as (a)(1)(ii)(A);
ii. (a)(2)(i)(A) as (a)(1)(ii)(A)(*1*);
iii. (a)(2)(1)(B) as (a)(1)(ii)(A)(*2*);
iv. (a)(2)(ii) introductory text as (a)(1)(ii)(B);
v. (a)(2)(ii)(A) as (a)(1)(ii)(B)(*1*); and
vi. (a)(2)(ii)(B) as (a)(1)(ii)(B)(*2*);
■ c. Adding paragraphs (a)(1)(ii)(C), and (D);
■ d. Revising paragraph (a)(2); and
■ e. Revising paragraph (b)(2).

The revisions and additions read as follows:

§ 429.17 Residential water heaters.

(a) *Determination of represented value.* Manufacturers must determine the represented value, which includes the certified rating, for each basic model of residential water heater either by testing, in conjunction with the applicable sampling provisions, or by applying an alternative efficiency determination method (AEDM) approved for use by DOE.

(1) *Units to be tested.* (i) If the represented value is determined through testing, the general requirements of § 429.11 are applicable; and

(ii) For each basic model selected for testing, a sample of sufficient size shall be randomly selected and tested to ensure that—

* * * * *

(C) Any represented value of the rated storage volume must be equal to the mean of the measured storage volumes of all the units within the sample.

(D) Any represented value of first-hour rating or maximum gallons per minute (GPM) must be equal to the mean of the measured first-hour ratings or measured maximum GPM ratings, respectively, of all the units within the sample.

(2) *Alternative efficiency determination methods.* In lieu of testing, represented values for a basic model must be determined through the application of an AEDM pursuant to the requirements of § 429.70.

(b) * * *

(2) Pursuant to § 429.12(b)(13), a certification report shall include the following public product-specific information: The uniform energy factor (UEF, rounded to the nearest 0.01), rated storage volume in gallons (gal), first-hour rating or maximum gallons per minute (GPM), and recovery efficiency (percent).

■ 3. Section 429.44 is amended by:
■ a. Redesignating paragraphs (a), (b), and (c) as (b), (c), and (d), respectively.
■ b. Adding new paragraph (a); and
■ c. Revising newly redesignated paragraph (b).

The revisions and additions read as follows:

§ 429.44 Commercial water heating equipment.

(a) For residential-duty commercial water heaters, all represented values must be determined in accordance with § 429.17.

(b) *Determination of Represented Value for All Types of Commercial Water Heaters Except Residential-Duty Commercial Water Heaters.* Manufacturers must determine the represented value, which includes the certified rating, for each basic model of commercial water heating equipment except residential-duty commercial water heaters, either by testing, in conjunction with the applicable sampling provisions, or by applying an AEDM as set forth in § 429.70.

* * * * *

■ 4. Section 429.70 is amended by adding paragraph (g) to read as follows:

§ 429.70 Alternative methods for determining energy efficiency and energy use

* * * * *

(g) *Alternative determination of ratings for untested basic models of residential water heaters and residential-duty commercial water heaters.* For models of water heaters that differ only in fuel type or power input, ratings for untested basic models may be established in accordance with the following procedures in lieu of testing. This method allows only for the use of ratings identical to those of a tested basic model as provided below; simulations or other modeling predictions for ratings of the uniform

energy factor, volume, first-hour rating, or maximum gallons per minute (GPM) are not permitted.

(1) *Gas Water Heaters.* For untested basic models of gas-fired water heaters that differ from tested basic models only in whether the basic models use natural gas or propane gas, the represented value of uniform energy factor, first-hour rating, and maximum gallons per minute for an untested basic model is the same as that for a tested basic model, as long as the input ratings of the tested and untested basic models are within ±10%, that is:

$$\frac{|\textit{input rating of untested basic model} - \textit{input rating of tested basic model}|}{\textit{input rating of tested basic model}} \leq 10\%.$$

(2) *Electric Storage Water Heaters.* Rate an untested basic model of an electric storage type water heater using the first-hour rating and the uniform energy factor obtained from a tested basic model as a basis for ratings of basic models with other input ratings, provided that certain conditions are met:

(i) For an untested basic model, the represented value of the first-hour rating and the uniform energy factor is the same as that of a tested basic model, provided that each heating element of the untested basic model is rated at or above the input rating for the corresponding heating element of the tested basic model.

(ii) For an untested basic model having any heating element with an input rating that is lower than that of the corresponding heating element in the tested basic model, the represented value of the first-hour rating and the uniform energy factor is the same as that of a tested basic model, provided that the first-hour rating for the untested basic model results in the same draw pattern specified in Table I of appendix E for the simulated-use test as was applied to the tested basic model. To establish whether this condition is met, determine the first-hour ratings for the tested and the untested basic models in accordance with the procedure described in section 5.3.3 of 10 CFR part 430, subpart B, appendix E, then compare the appropriate draw pattern specified in Table I of appendix E for the first-hour rating of the tested basic model with that for the untested basic model. If this condition is not met, then the untested basic model must be tested and the appropriate sampling provisions applied to determine its uniform energy factor in accordance with appendix E and this part.

■ 5. Section 429.134 is amended by removing and reserving paragraph (c) and adding paragraph (d) to read as follows:

§ 429.134 Product-specific enforcement provisions.

* * * * *

(d) *Residential Water Heaters and Residential-Duty Commercial Water Heaters*—(1) *Verification of first-hour rating and maximum GPM rating.* The first-hour rating or maximum gallons per minute (GPM) rating of the basic model will be measured pursuant to the test requirements of 10 CFR part 430 for each unit tested. The mean of the measured values will be compared to the rated values of first-hour rating or maximum GPM rating as certified by the manufacturer. The certified rating will be considered valid only if the measurement is within five percent of the certified rating.

(i) If the rated value of first-hour rating or maximum GPM rating is found to be within 5 percent of the mean of the measured values, then the rated value will be used as the basis for determining the applicable draw pattern pursuant to the test requirements of 10 CFR part 430 for each unit tested.

(ii) If the rated value of first-hour rating or maximum GPM rating is found to vary more than 5 percent from the measured values, then the mean of the measured values will serve as the basis for determining the applicable draw pattern pursuant to the test requirements of 10 CFR part 430 for each unit tested.

(2) *Verification of rated storage volume.* The storage volume of the basic model will be measured pursuant to the test requirements of 10 CFR part 430 for each unit tested. The mean of the measured values will be compared to the rated storage volume as certified by the manufacturer. The rated value will be considered valid only if the measurement is within five percent of the certified rating.

(i) If the rated storage volume is found to be within 5 percent of the mean of the measured value of storage volume, then that value will be used as the basis for calculation of the required uniform energy factor for the basic model.

(ii) If the rated storage volume is found to vary more than 5 percent from the mean of the measured values, then the mean of the measured values will be used as the basis for calculation of the required uniform energy factor for the basic model.

PART 430—ENERGY CONSERVATION PROGRAM FOR CONSUMER PRODUCTS

■ 6. The authority citation for part 430 continues to read as follows:

Authority: 42 U.S.C. 6291–6309; 28 U.S.C. 2461 note.

■ 7. Section 430.2 is amended by adding the definitions of ''Electric heat pump water heater,'' ''Electric instantaneous water heater,'' ''Electric storage water heater,'' ''Gas-fired instantaneous water heater,'' ''Gas-fired storage water heater,'' ''Gas-fired heat pump water heater,'' ''Oil-fired instantaneous water heater,'' and ''Oil-fired storage water heater'' in alphabetical order to read as follows:

§ 430.2 Definitions.

* * * * *

Electric heat pump water heater means a water heater that uses electricity as the energy source, has a maximum current rating of 24 amperes (including the compressor and all auxiliary equipment such as fans, pumps, controls, and, if on the same circuit, any resistive elements) at an input voltage of no greater than 250 volts, has a rated storage capacity of 120 gallons (450 liters) or less, is designed to transfer thermal energy from one temperature level to a higher temperature level for the purpose of heating water, including all ancillary equipment such as fans, storage tanks, pumps, or controls necessary for the device to perform its function, and is designed to heat and store water at a thermostatically-controlled temperature less than or equal to 180 °F (82 °C).

* * * * *

Electric instantaneous water heater means a water heater that uses electricity as the energy source, has a nameplate input rating of 12 kW (40,956 Btu/h) or less, contains no more than one gallon of water per 4,000 Btu per hour of input, and is designed to provide outlet water at a controlled temperature less than or equal to 180 °F (82 °C). The unit may use a fixed or variable burner input.

* * * * *

Electric storage water heater means a water heater that uses electricity as the energy source, has a nameplate input rating of 12 kW (40,956 Btu/h) or less, has a rated storage capacity of 120 gallons (450 liters) or less, contains more than one gallon of water per 4,000 Btu per hour of input, and may be designed to heat and store water at a thermostatically-controlled temperature less than or equal to 180 °F (82 °C).

* * * * *

Gas-fired heat pump water heater means a water heater that uses gas as the main energy source, has a nameplate input rating of 75,000 Btu/h (79 MJ/h) or less, has a maximum current rating of 24 amperes (including all auxiliary equipment such as fans, pumps, controls, and, if on the same circuit, any resistive elements) at an input voltage of no greater than 250 volts, has a rated storage volume not more than 120 gallons (450 liters), and is designed to transfer thermal energy from one temperature level to a higher temperature level to deliver water at a thermostatically controlled temperature less than or equal to 180 °F (82 °C).

Gas-fired instantaneous water heater means a water heater that uses gas as the main energy source, has a nameplate input rating less than 200,000 Btu/h (210 MJ/h), contains no more than one gallon of water per 4,000 Btu per hour of input, and is designed to provide outlet water at a controlled temperature less than or equal to 180 °F (82 °C). The unit may use a fixed or variable burner input.

Gas-fired storage water heater means a water heater that uses gas as the main energy source, has a nameplate input rating of 75,000 Btu/h (79 MJ/h) or less, has a rated storage capacity of 120 gallons (450 liters) or less, contains more than one gallon of water per 4,000 Btu per hour of input, and is designed to heat and store water at a thermostatically-controlled temperature less than or equal to 180 °F (82 °C).

* * * * *

Oil-fired instantaneous water heater means a water heater that uses oil as the main energy source, has a nameplate input rating of 210,000 Btu/h (220 MJ/h) or less, contains no more than one gallon of water per 4,000 Btu per hour of input, and is designed to provide outlet water at a controlled temperature less than or equal to 180 °F (82 °C). The unit may use a fixed or variable burner input.

Oil-fired storage water heater means a water heater that uses oil as the main energy source, has a nameplate input rating of 105,000 Btu/h (110 MJ/h) or less, has a rated storage capacity of 120 gallons (450 liters) or less, contains more than one gallon of water per 4,000 Btu per hour of input, and is designed to heat and store water at a thermostatically-controlled temperature less than or equal to 180 °F (82 °C).

* * * * *

■ 8. Section 430.3 is amended by:

■ a. Redesignating paragraphs (h) through (t) as (i) through (u), respectively; and

■ b. Adding a new paragraph (h).

The addition reads as follows:

§ 430.3 Materials incorporated by reference.

* * * * *

(h) *ASTM.* American Society for Testing and Materials International, 100 Barr Harbor Drive, P.O. Box C700, West Conshohocken, PA 19428–2959 (*www.astm.org*).

(1) ASTM D 2156–09 (''ASTM D2156''), Standard Test Method for Smoke Density in Flue Gases from Burning Distillate Fuels, approved December 1, 2009, IBR approved for appendix E to subpart B.

(2) [Reserved].

* * * * *

■ 9. Section 430.23 is amended by revising paragraph (e) to read as follows:

§ 430.23 Test procedures for the measurement of energy and water consumption.

* * * * *

(e) *Water Heaters.* (1) The estimated annual operating cost for water heaters shall be—

(i) For a gas or oil water heater, the sum of: the product of the annual gas or oil energy consumption, determined according to section 6.1.10 or 6.2.7 of appendix E of this subpart, times the representative average unit cost of gas or oil, as appropriate, in dollars per Btu as provided by the Secretary; plus the product of the annual electric energy consumption, determined according to section 6.1.9 or 6.2.6 of appendix E of this subpart, times the representative average unit cost of electricity in dollars per kilowatt-hour as provided by the Secretary, the resulting sum then being rounded off to the nearest dollar per year.

(ii) For an electric water heater, the product of the annual energy consumption, determined according to section 6.1.9 or 6.2.6 of appendix E of this subpart, times the representative average unit cost of electricity in dollars per kilowatt-hour as provided by the Secretary, the resulting product then being rounded off to the nearest dollar per year.

(2) For an individual test, the tested uniform energy factor for a water heater shall be—

(i) For a gas or oil water heater, as determined by section 6.1.7 or 6.2.4 of appendix E of this subpart rounded to the nearest 0.01.

(ii) For an electric water heater, as determined by section 6.1.7 or 6.2.4 of appendix E of this subpart rounded to the nearest 0.01.

* * * * *

■ 10. Appendix E to Subpart B of Part 430 is revised to read as follows:

Appendix E to Subpart B of Part 430–Uniform Test Method for Measuring the Energy Consumption of Water Heaters

Note: After December 31, 2015, any representations made with respect to the energy use or efficiency of residential water heaters and commercial water heaters covered by this test method must be made in accordance with the results of testing pursuant to this appendix. (Because the statute permits use of a conversion factor until the later of December 31, 2015 or one year after publication of a conversion factor final rule, DOE may amend the mandatory compliance date for use of this amended test procedure, as necessary.)

Manufacturers conducting tests of residential water heaters and commercial water heaters covered by this test method after July 13, 2015, and prior to December 31, 2015, must conduct such test in accordance with either this appendix or the previous test method. For residential water heaters, the previous test method is appendix E as it appeared at 10 CFR part 430, subpart B, appendix E, in the 10 CFR parts 200 to 499 edition revised as of January 1, 2014. For commercial water heaters, the previous test method is 10 CFR 431.106 in the 10 CFR parts 200 to 499 edition revised as of January 1, 2014. Any representations made with respect to the energy use or efficiency of such water heaters must be in accordance with whichever version is selected.

1. Definitions.

1.1. *Cut-in* means the time when or water temperature at which a water heater control or thermostat acts to increase the energy or fuel input to the heating elements, compressor, or burner.

1.2. *Cut-out* means the time when or water temperature at which a water heater control or thermostat acts to reduce to a minimum the energy or fuel input to the heating elements, compressor, or burner.

1.3. *Design Power Rating* means the nominal power rating that a water heater manufacturer assigns to a particular design of water heater, expressed in kilowatts or Btu (kJ) per hour as appropriate.

1.4. *Draw Cluster* means a collection of water draws initiated during the simulated-use test during which no successive draws are separated by more than 2 hours.

1.5. *First-Hour Rating* means an estimate of the maximum volume of ''hot'' water that a storage-type water heater can supply within

an hour that begins with the water heater fully heated (*i.e.,* with all thermostats satisfied). It is a function of both the storage volume and the recovery rate.

1.6. *Flow-activated* describes an operational scheme in which a water heater initiates and terminates heating based on sensing flow.

1.7. *Heat Trap* means a device that can be integrally connected or independently attached to the hot and/or cold water pipe connections of a water heater such that the device will develop a thermal or mechanical seal to minimize the recirculation of water due to thermal convection between the water heater tank and its connecting pipes.

1.8. *Maximum GPM (L/min) Rating* means the maximum gallons per minute (liters per minute) of hot water that can be supplied by an instantaneous water heater while maintaining a nominal temperature rise of 67 °F (37.3 °C) during steady-state operation, as determined by testing in accordance with section 5.3.2 of this appendix.

1.9. *Rated Storage Volume* means the water storage capacity of a water heater, in gallons (liters), as certified by the manufacturer pursuant to 10 CFR part 429.

1.10. *Recovery Efficiency* means the ratio of energy delivered to the water to the energy content of the fuel consumed by the water heater.

1.11. *Recovery Period* means the time when the main burner of a storage water heater is raising the temperature of the stored water.

1.12. *Standby* means the time, in hours, during which water is not being withdrawn from the water heater. There are two standby time intervals used within this test procedure: $\tau_{stby,1}$ represents the elapsed time between the time at which the maximum mean tank temperature is observed after the first draw cluster and the minute prior to the start of the first draw following the end of the first draw cluster of the 24-hour simulated-use test; $\tau_{stby,2}$ represents the total time during the 24-hour simulated-use test when water is not being withdrawn from the water heater.

1.13. *Symbol Usage.* The following identity relationships are provided to help clarify the symbology used throughout this procedure:

C_p—specific heat of water

E_{annual}—annual energy consumption of a water heater

$E_{annual,e}$—annual electrical energy consumption of a water heater

$E_{annual,f}$—annual fossil-fuel energy consumption of a water heater

F_{hr}—first-hour rating of a storage-type water heater

F_{max}—maximum GPM (L/min) rating of an instantaneous water heater rated at a temperature rise of 67 °F (37.3 °C)

i—a subscript to indicate the draw number during a test

M_i—mass of water removed during the ith draw of the 24-hour simulated-use test

M^*_i—for storage-type water heaters, mass of water removed during the ith draw during the first-hour rating test

M_{10m}—for instantaneous water heaters, mass of water removed continuously during a 10-minute interval in the maximum GPM (L/min) rating test

n—for storage-type water heaters, total number of draws during the first-hour rating test

N—total number of draws during the 24-hour simulated-use test

Q—total fossil fuel and/or electric energy consumed during the entire 24-hour simulated-use test

Q_d—daily water heating energy consumption adjusted for net change in internal energy

Q_{da}—Q_d with adjustment for variation of tank to ambient air temperature difference from nominal value

Q_{dm}—overall adjusted daily water heating energy consumption including Q_{da} and Q_{HWD}

Q_e—total electrical energy used during the 24-hour simulated-use test

Q_f—total fossil fuel energy used by the water heater during the 24-hour simulated-use test

Q_{hr}—hourly standby losses

Q_{HW}—daily energy consumption to heat water at the measured average temperature rise across the water heater

$Q_{HW,67\,°F}$—daily energy consumption to heat quantity of water removed during test over a temperature rise of 67 °F (37.3 °C)

Q_{HWD}—adjustment to daily energy consumption, Q_{HW}, due to variation of the temperature rise across the water heater not equal to the nominal value of 67 °F

Q_r—energy consumption of water heater from the beginning of the test to the end of the first recovery period following the first draw, which may extend beyond subsequent draws

Q_{stby}—total energy consumed by the water heater during the standby time interval $\tau_{stby,1}$

$Q_{su,0}$—total fossil fuel and/or electric energy consumed from the beginning of the test to the end of the cutout following the first draw cluster

$Q_{su,f}$—total fossil fuel and/or electric energy consumed from the beginning of the test to the initiation of the first draw following the first draw cluster

$\overline{T}_0$—mean tank temperature at the beginning of the 24-hour simulated-use test

$\overline{T}_{24}$—mean tank temperature at the end of the 24-hour simulated-use test

$\overline{T}_{a,stby}$—average ambient air temperature during standby periods of the 24-hour simulated-use test

$\overline{T}_{del}$—for flow-activated water heaters, average outlet water temperature during a 10-minute continuous draw interval in the maximum GPM (L/min) rating test

$\overline{T}_{del,i}$—average outlet water temperature during the ith draw of the 24-hour simulated-use test

$\overline{T}_{in}$—for flow-activated water heaters, average inlet water temperature during a 10-minute continuous draw interval in the maximum GPM (L/min) rating test

$\overline{T}_{in,i}$—average inlet water temperature during the ith draw of the 24-hour simulated-use test

$\overline{T}_{max,1}$—maximum measured mean tank temperature after cut-out following the first draw of the 24-hour simulated-use test

$\overline{T}_{su,0}$—maximum measured mean tank temperature at the beginning of the standby period which occurs after cut-out following the final draw of the first draw cluster

$\overline{T}_{su,f}$—measured mean tank temperature at the end of the standby period which occurs at the minute prior to commencement of the first draw that follows the end of the first draw cluster

$\overline{T}^*_{del,i}$—for storage-type water heaters, average outlet water temperature during the ith draw (i = 1 to n) of the first-hour rating test

$\overline{T}^*_{max,i}$—for storage-type water heaters, maximum outlet water temperature observed during the ith draw (i = 1 to n) of the first-hour rating test

$\overline{T}^*_{min,i}$—for storage-type water heaters, minimum outlet water temperature to terminate the ith draw (i = 1 to n) of the first-hour rating test

UA—standby loss coefficient of a storage-type water heater

UEF—uniform energy factor of a water heater

V_i—volume of water removed during the ith draw (i = 1 to N) of the 24-hour simulated-use test

V^*_i—volume of water removed during the ith draw (i = 1 to n) of the first-hour rating test

V_{10m}—for flow-activated water heaters, volume of water removed continuously during a 10-minute interval in the maximum GPM (L/min) rating test

V_{st}—measured storage volume of the storage tank

W_f—weight of storage tank when completely filled with water

W_t—tare weight of storage tank when completely empty of water

η_r—recovery efficiency

ρ—density of water

$\tau_{stby,1}$—elapsed time between the time the maximum mean tank temperature is observed after the first draw cluster and the minute prior to the start of the first draw following the first draw cluster

$\tau_{stby,2}$—overall time of standby periods when no water is withdrawn during the 24-hour simulated-use test

1.14. *Temperature controller* means a device that is available to the user to adjust the temperature of the water inside a storage-type water heater or the outlet water temperature.

1.15. *Uniform Energy Factor* means the measure of water heater overall efficiency.

2. Test Conditions.

2.1 *Installation Requirements.* Tests shall be performed with the water heater and instrumentation installed in accordance with section 4 of this appendix.

2.2 *Ambient Air Temperature.* The ambient air temperature shall be maintained between 65.0 °F and 70.0 °F (18.3 °C and 21.1 °C) on a continuous basis. For heat pump water heaters, the dry bulb temperature shall be maintained at 67.5 °F ± 1 °F (19.7 °C ± 0.6 °C) and the relative humidity shall be maintained at 50% ± 2% throughout the test.

2.3 *Supply Water Temperature.* The temperature of the water being supplied to the water heater shall be maintained at 58 °F ± 2 °F (14.4 °C ± 1.1 °C) throughout the test.

2.4 *Outlet Water Temperature.* The temperature controllers of a storage-type

water heater shall be set so that water is delivered at a temperature of 125 °F ± 5 °F (51.7 °C ± 2.8 °C).

2.5 *Set Point Temperature.* The temperature controller of instantaneous water heaters shall be set to deliver water at a temperature of 125 °F ± 5 °F (51.7 °C ± 2.8 °C).

2.6 *Supply Water Pressure.* During the test when water is not being withdrawn, the supply pressure shall be maintained between 40 psig (275 kPa) and the maximum allowable pressure specified by the water heater manufacturer.

2.7 *Electrical and/or Fossil Fuel Supply.*

2.7.1 *Electrical.* Maintain the electrical supply voltage to within ±1% of the center of the voltage range specified by the water heater and/or heat pump manufacturer.

2.7.2 *Natural Gas.* Maintain the supply pressure in accordance with the manufacturer's specifications. If the supply pressure is not specified, maintain a supply pressure of 7–10 inches of water column (1.7–2.5 kPa). If the water heater is equipped with a gas appliance pressure regulator, the regulator outlet pressure shall be within ± 10% of the manufacturer's specified manifold pressure. For all tests, use natural gas having a heating value of approximately 1,025 Btu per standard cubic foot (38,190 kJ per standard cubic meter).

2.7.3 *Propane Gas.* Maintain the supply pressure in accordance with the manufacturer's specifications. If the supply pressure is not specified, maintain a supply pressure of 11–13 inches of water column (2.7–3.2 kPa). If the water heater is equipped with a gas appliance pressure regulator, the regulator outlet pressure shall be within ± 10% of the manufacturer's specified manifold pressure. For all tests, use propane gas with a heating value of approximately 2,500 Btu per standard cubic foot (93,147 kJ per standard cubic meter).

2.7.4 *Fuel Oil Supply.* Maintain an uninterrupted supply of fuel oil. Use fuel oil having a heating value of approximately 138,700 Btu per gallon (38,660 kJ per liter).

3. Instrumentation

3.1 *Pressure Measurements.* Pressure-measuring instruments shall have an error no greater than the following values:

Item measured	Instrument accuracy	Instrument precision
Gas pressure	±0.1 inch of water column (±0.025 kPa)	±0.05 inch of water column (±0.012 kPa).
Atmospheric pressure	±0.1 inch of mercury column (±0.34 kPa)	±0.05 inch of mercury column (±0.17 kPa).
Water pressure	±1.0 pounds per square inch (±6.9 kPa)	±0.50 pounds per square inch (±3.45 kPa).

3.2 *Temperature Measurement*

3.2.1 *Measurement.* Temperature measurements shall be made in accordance with the Standard Method for Temperature Measurement, ASHRAE 41.1–1986 (incorporated by reference, see § 430.3).

3.2.2 *Accuracy and Precision.* The accuracy and precision of the instruments, including their associated readout devices, shall be within the following limits:

Item measured	Instrument accuracy	Instrument precision
Air dry bulb temperature	±0.2°F (±0.1°C)	±0.1°F (±0.06°C).
Air wet bulb temperature	±0.2°F (±0.1°C)	±0.1°F (±0.06°C).
Inlet and outlet water temperatures	±0.2°F (±0.1°C)	±0.1°F (±0.06°C).
Storage tank temperatures	±0.5°F (±0.3°C)	±0.25°F (±0.14°C).

3.2.3 *Scale Division.* In no case shall the smallest scale division of the instrument or instrument system exceed 2 times the specified precision.

3.2.4 *Temperature Difference* Temperature difference between the entering and leaving water may be measured with any of the following:

a. A thermopile
b. Calibrated resistance thermometers
c. Precision thermometers
d. Calibrated thermistors
e. Calibrated thermocouples
f. Quartz thermometers

3.2.5 *Thermopile Construction.* If a thermopile is used, it shall be made from calibrated thermocouple wire taken from a single spool. Extension wires to the recording device shall also be made from that same spool.

3.2.6 *Time Constant.* The time constant of the instruments used to measure the inlet and outlet water temperatures shall be no greater than 2 seconds.

3.3 *Liquid Flow Rate Measurement.* The accuracy of the liquid flow rate measurement, using the calibration if furnished, shall be equal to or less than ±1% of the measured value in mass units per unit time.

3.4 *Electrical Energy.* The electrical energy used shall be measured with an instrument and associated readout device that is accurate within ±0.5% of the reading.

3.5 *Fossil Fuels.* The quantity of fuel used by the water heater shall be measured with an instrument and associated readout device that is accurate within ±1% of the reading.

3.6 *Mass Measurements.* For mass measurements greater than or equal to 10 pounds (4.5 kg), a scale that is accurate within ±0.5% of the reading shall be used to make the measurement. For mass measurements less than 10 pounds (4.5 kg), the scale shall provide a measurement that is accurate within ±0.1 pound (0.045 kg).

3.7 *Heating Value.* The higher heating value of the natural gas, propane, or fuel oil shall be measured with an instrument and associated readout device that is accurate within ±1% of the reading. The heating values of natural gas and propane must be corrected from those reported at standard temperature and pressure conditions to provide the heating value at the temperature and pressure measured at the fuel meter.

3.8 *Time.* The elapsed time measurements shall be measured with an instrument that is accurate within ±0.5 seconds per hour.

3.9 *Volume.* Volume measurements shall be measured with an accuracy of ±2% of the total volume.

3.10 *Relative Humidity.* If a relative humidity (RH) transducer is used to measure the relative humidity of the surrounding air while testing heat pump water heaters, the relative humidity shall be measured with an accuracy of ±1.5% RH.

4. Installation

4.1 *Water Heater Mounting.* A water heater designed to be freestanding shall be placed on a ¾ inch (2 cm) thick plywood platform supported by three 2 x 4 inch (5 cm x 10 cm) runners. If the water heater is not approved for installation on combustible flooring, suitable non-combustible material shall be placed between the water heater and the platform. Counter-top water heaters shall be placed against a simulated wall section. Wall-mounted water heaters shall be supported on a simulated wall in accordance with the manufacturer-published installation instructions. When a simulated wall is used, the construction shall be 2 x 4 inch (5 cm x 10 cm) studs, faced with ¾ inch (2 cm) plywood. For heat pump water heaters not delivered as a single package, the units shall be connected in accordance with the manufacturer-published installation instructions and the overall system shall be placed on the above-described plywood platform. If installation instructions are not provided by the heat pump manufacturer, uninsulated 8 foot (2.4 m) long connecting hoses having an inside diameter of 5/8 inch (1.6 cm) shall be used to connect the storage tank and the heat pump water heater. The testing of the water heater shall occur in an area that is protected from drafts of more than 50 ft/min (0.25 m/s) from room ventilation registers, windows, or other external sources of air movement.

4.2 *Water Supply.* Connect the water heater to a water supply capable of delivering water at conditions as specified in sections 2.3 and 2.6 of this appendix.

4.3 *Water Inlet and Outlet Configuration.* For freestanding water heaters that are taller than 36 inches (91.4 cm), inlet and outlet piping connections shall be configured in a manner consistent with Figures 1 and 2 of section 6.4.6 of this appendix. Inlet and outlet piping connections for wall-mounted water heaters shall be consistent with Figure 3 of section 6.4.6 of this appendix. For freestanding water heaters that are 36 inches or less in height and not supplied as part of a counter-top enclosure (commonly referred to as an under-the-counter model), inlet and outlet piping shall be installed in a manner consistent with Figures 4, 5, or 6 of section 6.4.6 of this appendix. For water heaters that are supplied with a counter-top enclosure, inlet and outlet piping shall be made in a manner consistent with Figures 7a and 7b of section 6.4.6 of this appendix, respectively. The vertical piping noted in Figures 7a and 7b shall be located (whether inside the enclosure or along the outside in a recessed channel) in accordance with the manufacturer-published installation instructions.

All dimensions noted in Figures 1 through 7 of section 6.4.6 of this appendix must be achieved. All piping between the water heater and inlet and outlet temperature sensors, noted as T_{IN} and T_{OUT} in the figures, shall be Type ''L'' hard copper having the same diameter as the connections on the water heater. Unions may be used to facilitate installation and removal of the piping arrangements. Install a pressure gauge and diaphragm expansion tank in the supply water piping at a location upstream of the inlet temperature sensor. Install an appropriately rated pressure and temperature relief valve on all water heaters at the port specified by the manufacturer. Discharge piping for the relief valve must be non-metallic. If heat traps, piping insulation, or pressure relief valve insulation are supplied with the water heater, they must be installed for testing. Except when using a simulated wall, provide sufficient clearance such that none of the piping contacts other surfaces in the test room.

4.4 *Fuel and/or Electrical Power and Energy Consumption.* Install one or more instruments that measure, as appropriate, the quantity and rate of electrical energy and/or fossil fuel consumption in accordance with section 3 of this appendix.

4.5 *Internal Storage Tank Temperature Measurements.* For water heaters with rated storage volumes greater than or equal to 20 gallons, install six temperature measurement sensors inside the water heater tank with a vertical distance of at least 4 inches (100 mm) between successive sensors. For water heaters with rated storage volumes between 2 and 20 gallons, install three temperature measurement sensors inside the water heater tank. Position a temperature sensor at the vertical midpoint of each of the six equal volume nodes within a tank larger than 20 gallons or the three equal volume nodes within a tank between 2 and 20 gallons. Nodes designate the equal volumes used to evenly partition the total volume of the tank. As much as is possible, the temperature sensor should be positioned away from any heating elements, anodic protective devices, tank walls, and flue pipe walls. If the tank cannot accommodate six temperature sensors and meet the installation requirements specified above, install the maximum number of sensors that comply with the installation requirements. Install the temperature sensors through: (1) The anodic device opening; (2) the relief valve opening; or (3) the hot water outlet. If installed through the relief valve opening or the hot water outlet, a tee fitting or outlet piping, as applicable, must be installed as close as possible to its original location. If the relief valve temperature sensor is relocated, and it no longer extends into the top of the tank, install a substitute relief valve that has a sensing element that can reach into the tank. If the hot water outlet includes a heat trap, install the heat trap on top of the tee fitting. Cover any added fittings with thermal insulation having an R value between 4 and 8 $h \cdot ft^2 \cdot °F/Btu$ (0.7 and 1.4 $m^2 \cdot °C/W$).

4.6 *Ambient Air Temperature Measurement.* Install an ambient air temperature sensor at the vertical mid-point of the water heater and approximately 2 feet (610 mm) from the surface of the water heater. Shield the sensor against radiation.

4.7 *Inlet and Outlet Water Temperature Measurements.* Install temperature sensors in the cold-water inlet pipe and hot-water outlet pipe as shown in Figures 1, 2, 3, 4, 5, 6, 7a, and 7b of section 6.4.6 of this appendix, as applicable.

4.8 *Flow Control.* Install a valve or valves to provide flow as specified in sections 5.3 and 5.4 of this appendix.

4.9 *Flue Requirements.*

4.9.1 *Gas-Fired Water Heaters.* Establish a natural draft in the following manner. For gas-fired water heaters with a vertically discharging draft hood outlet, connect to the draft hood outlet a 5-foot (1.5-meter) vertical vent pipe extension with a diameter equal to the largest flue collar size of the draft hood. For gas-fired water heaters with a horizontally discharging draft hood outlet, connect to the draft hood outlet a 90-degree elbow with a diameter equal to the largest flue collar size of the draft hood, connect a 5-foot (1.5-meter) length of vent pipe to that elbow, and orient the vent pipe to discharge vertically upward. Install direct-vent gas-fired water heaters with venting equipment specified in the manufacturer's instructions using the minimum vertical and horizontal lengths of vent pipe recommended by the manufacturer.

4.9.2 *Oil-Fired Water Heaters.* Establish a draft at the flue collar at the value specified in the manufacturer's instructions. Establish the draft by using a sufficient length of vent pipe connected to the water heater flue outlet, and directed vertically upward. For an oil-fired water heater with a horizontally discharging draft hood outlet, connect to the draft hood outlet a 90-degree elbow with a diameter equal to the largest flue collar size of the draft hood, connect to the elbow fitting a length of vent pipe sufficient to establish the draft, and orient the vent pipe to discharge vertically upward. Direct-vent oil-fired water heaters should be installed with venting equipment as specified in the manufacturer's instructions, using the minimum vertical and horizontal lengths of vent pipe recommended by the manufacturer.

5. Test Procedures

5.1 *Operational Mode Selection.* For water heaters that allow for multiple user-selected operational modes, all procedures specified in this appendix shall be carried out with the water heater in the same operational mode (*i.e.,* only one mode). This operational mode shall be the default mode (or similarly-named, suggested mode for normal operation) as defined by the manufacturer in its product literature for giving selection guidance to the consumer. For heat pump water heaters, if a default mode is not defined in the product literature, each test shall be conducted under an operational mode in which both the heat pump and any electric resistance backup heating element(s) are activated by the unit's control scheme, and which can achieve the internal storage tank temperature specified in this test procedure; if multiple operational modes meet these criteria, the water heater shall be tested under the most energy-intensive mode. If no default mode is specified and the unit does not offer an operational mode that utilizes both the heat pump and the electric resistance backup heating element(s), the first-hour rating test and the simulated-use test shall be tested in heat-pump-only mode. For other types of water heaters where a default mode is not specified, test the unit in all modes and rate the unit using the results of the most energy-intensive mode.

5.2 *Water Heater Preparation.*

5.2.1 *Determination of Storage Tank Volume.* For water heaters with a rated storage volume greater than or equal to 2 gallons, determine the storage capacity, $V_{st,}$ of the water heater under test, in gallons (liters), by subtracting the tare weight—measured while the tank is empty—from the gross weight of the storage tank when completely filled with water (with all air eliminated and line pressure applied as described in section 2.5 of this appendix) and dividing the resulting net weight by the density of water at the measured temperature.

5.2.2 *Setting the Outlet Discharge Temperature.*

5.2.2.1 *Flow-Activated Water Heaters, including certain instantaneous water heaters and certain storage-type water heaters.* Initiate normal operation of the water heater at the full input rating for electric water heaters and at the maximum firing rate specified by the manufacturer for gas or oil water heaters. Monitor the discharge water temperature and set to a value of 125 °F ± 5 °F (51.7 °C ± 2.8 °C) in accordance with the manufacturer's instructions. If the water heater is not capable of providing this discharge temperature when the flow rate is 1.7 gallons ± 0.25 gallons per minute (6.4 liters ± 0.95 liters per minute), then adjust the flow rate as necessary to achieve the specified discharge water temperature. Once the proper temperature control setting is achieved, the setting must remain fixed for the duration of the

maximum GPM test and the simulated-use test.

5.2.2.2 *Storage-Type Water Heaters that Are Not Flow-Activated.*

5.2.2.2.1 *Tanks with a Single Temperature Controller.*

5.2.2.2.1.1 *Water Heaters with Rated Volumes Less than 20 Gallons.* Starting with a tank at the supply water temperature, initiate normal operation of the water heater. After cut-out, initiate a draw from the water heater at a flow rate of 1.0 gallon ± 0.25 gallons per minute (3.8 liters ± 0.95 liters per minute) for 2 minutes. Starting 15 seconds after commencement of draw, record the outlet temperature at 15-second intervals until the end of the 2-minute period. Determine whether the maximum outlet temperature is within the range of 125 °F ± 5 °F (51.7 °C ± 2.8 °C). If not, turn off the water heater, adjust the temperature controller, and then drain and refill the tank with supply water. Then, once again, initiate normal operation of the water heater, and repeat the 2-minute outlet temperature test following cut-out. Repeat this sequence until the maximum outlet temperature during the 2-minute test is within 125 °F ± 5 °F (51.7 °C ± 2.8 °C). Once the proper temperature control setting is achieved, the setting must remain fixed for the duration of the first-hour rating test and the simulated-use test such that a second identical simulated-use test run immediately following the one specified in section 5.4 would result in average delivered water temperatures that are within the bounds specified in section 2.4 of this appendix.

5.2.2.2.1.2 *Water Heaters with Rated Volumes Greater than or Equal to 20 Gallons.* Starting with a tank at the supply water temperature, initiate normal operation of the water heater. After cut-out, initiate a draw from the water heater at a flow rate of 1.7 gallons ± 0.25 gallons per minute (6.4 liters ± 0.95 liters per minute) for 5 minutes. Starting 15 seconds after commencement of draw, record the outlet temperature at 15-second intervals until the end of the 5-minute period. Determine whether the maximum outlet temperature is within the range of 125 °F ± 5 °F (51.7 °C ± 2.8 °C). If not, turn off the water heater, adjust the temperature controller, and then drain and refill the tank with supply water. Then, once again, initiate normal operation of the water heater, and repeat the 5-minute outlet temperature test following cut-out. Repeat this sequence until the maximum outlet temperature during the 5-minute test is within of 125 °F ± 5 °F (51.7 °C ± 2.8 °C). Once the proper temperature control setting is achieved, the setting must remain fixed for the duration of the first-hour rating test and the simulated-use test such that a second identical simulated-use test run immediately following the one specified in section 5.4 would result in average delivered water temperatures that are within the bounds specified in section 2.4 of this appendix.

5.2.2.2.2 *Tanks with Two or More Temperature Controllers.* Verify the temperature controller set-point while removing water in accordance with the procedure set forth for the first-hour rating test in section 5.3.3 of this appendix. The following criteria must be met to ensure that all temperature controllers are set to deliver water at 125 °F ± 5 °F (51.7 °C ± 2.8 °C):

(a) At least 50 percent of the water drawn during the first draw of the first-hour rating test procedure shall be delivered at a temperature of 125 °F ± 5 °F (51.7 °C ± 2.8 °C).

(b) No water is delivered above 130 °F (54.4 °C) during first-hour rating test.

(c) The delivery temperature measured 15 seconds after commencement of each draw begun prior to an elapsed time of 60 minutes from the start of the test shall be at 125 °F ± 5 °F (51.7 °C ± 2.8 °C).

If these conditions are not met, turn off the water heater, adjust the temperature controllers, and then drain and refill the tank with supply water. Repeat the procedure described at the start of section 5.2.2.2.2 until the criteria for setting the temperature controllers is met.

If the conditions stated above are met, the data obtained during the process of verifying the temperature control set-points may be used in determining the first-hour rating provided that all other conditions and methods required in sections 2 and 5.2.4 in preparing the water heater were followed.

5.2.3 *Power Input Determination.* For all water heaters except electric types, initiate normal operation (as described in section 5.1) and determine the power input, P, to the main burners (including pilot light power, if any) after 15 minutes of operation. If the water heater is equipped with a gas appliance pressure regulator, the regulator outlet pressure shall be set within ±10% of that recommended by the manufacturer. For oil-fired water heaters, the fuel pump pressure shall be within ±10% of the manufacturer's specified pump pressure. Adjust all burners to achieve an hourly Btu (kJ) rating that is within ±2% of the value specified by the manufacturer. For an oil-fired water heater, adjust the burner to give a CO_2 reading recommended by the manufacturer and an hourly Btu (kJ) rating that is within ±2% of that specified by the manufacturer. Smoke in the flue may not exceed No. 1 smoke as measured by the procedure in ASTM D2156 (incorporated by reference, see § 430.3).

5.2.4 *Soak-In Period for Water Heaters with Rated Storage Volumes Greater than or Equal to 2 Gallons.* For storage-type water heaters and instantaneous water heaters having greater than 2 gallons (7.6 liters) of storage (including heat pump water heaters having greater than 2 gallons of storage), the water heater must sit filled with water and without any draws taking place for at least 12 hours after initially being energized so as to achieve the nominal temperature set-point within the tank and with the unit connected to a power source.

5.3 *Delivery Capacity Tests.*

5.3.1 General. For flow-activated water heaters, conduct the maximum GPM test, as described in section 5.3.2, *Maximum GPM Rating Test for Flow-Activated Water Heaters,* of this appendix. For all other water heaters, conduct the first-hour rating test as described in section 5.3.3 of this appendix.

5.3.2 Maximum GPM Rating Test for Flow-Activated Water Heaters. Establish normal water heater operation at the full input rate for electric water heaters and at the maximum firing rate for gas or oil water heaters with the discharge water temperature set in accordance with section 5.2.2.1 of this appendix.

For this 10-minute test, either collect the withdrawn water for later measurement of the total mass removed or use a water meter to directly measure the water volume removed. Initiate water flow through the water heater and record the inlet and outlet water temperatures beginning 15 seconds after the start of the test and at subsequent 5-second intervals throughout the duration of the test. At the end of 10 minutes, turn off the water. Determine and record the mass of water collected, M_{10m}, in pounds (kilograms), or the volume of water, V_{10m}, in gallons (liters).

5.3.3 First-Hour Rating Test.

5.3.3.1 *General.* During hot water draws for water heaters with rated storage volumes greater than or equal to 20 gallons, remove water at a rate of 3.0 ± 0.25 gallons per minute (11.4 ± 0.95 liters per minute). During hot water draws for storage-type water heaters with rated storage volumes below 20 gallons, remove water at a rate of 1.0 ± 0.25 gallon per minute (3.8 ± 0.95 liters per minute). Collect the water in a container that is large enough to hold the volume removed during an individual draw and is suitable for weighing at the termination of each draw to determine the total volume of water withdrawn. As an alternative to collecting the water, a water meter may be used to directly measure the water volume(s) withdrawn.

5.3.3.2 *Draw Initiation Criteria.* Begin the first-hour rating test by starting a draw on the storage-type water heater. After completion of this first draw, initiate successive draws based on the following criteria. For gas-fired and oil-fired water heaters, initiate successive draws when the temperature controller acts to reduce the supply of fuel to the main burner. For electric water heaters having a single element or multiple elements that all operate simultaneously, initiate successive draws when the temperature controller acts to reduce the electrical input supplied to the element(s). For electric water heaters having two or more elements that do not operate simultaneously, initiate successive draws when the applicable temperature controller acts to reduce the electrical input to the energized element located vertically highest in the storage tank. For heat pump water heaters that do not use supplemental, resistive heating, initiate successive draws immediately after the electrical input to the compressor is reduced by the action of the water heater's temperature controller. For heat pump water heaters that use supplemental resistive heating, initiate successive draws immediately after the electrical input to the first of either the compressor or the vertically highest resistive element is reduced by the action of the applicable water heater temperature controller. This draw initiation criterion for heat pump water heaters that use supplemental resistive heating, however, shall only apply when the water located above the thermostat at cut-out is heated to 125 °F ± 5 °F (51.7 °C ± 2.8 °C). If this

criterion is not met, then the next draw should be initiated once the heat pump compressor cuts out.

5.3.3.3 *Test Sequence.* Establish normal water heater operation. If the water heater is not presently operating, initiate a draw. The draw may be terminated any time after cut-in occurs. After cut-out occurs (*i.e.,* all temperature controllers are satisfied), record the internal storage tank temperature at each sensor described in section 4.5 of this appendix every one minute, and determine the mean tank temperature by averaging the values from these sensors.

Initiate a draw after a maximum mean tank temperature (the maximum of the mean temperatures of the individual sensors) has been observed following a cut-out. Record the time when the draw is initiated and designate it as an elapsed time of zero ($\tau^* = 0$). (The superscript * is used to denote variables pertaining to the first-hour rating test). Record the outlet water temperature beginning 15 seconds after the draw is initiated and at 5-second intervals thereafter until the draw is terminated. Determine the maximum outlet temperature that occurs during this first draw and record it as $T^*_{max,1}$. For the duration of this first draw and all successive draws, in addition, monitor the inlet temperature to the water heater to ensure that the required 58 °F ± 2 °F (14.4 °C ± 1.1 °C) test condition is met. Terminate the hot water draw when the outlet temperature decreases to $T^*_{max,1} - 15$ °F ($T^*_{max,1} - 8.3$ °C). (Note, if the outlet temperature does not decrease to $T^*_{max,1} - 15$ °F ($T^*_{max,1} - 8.3$ °C) during the draw, then hot water would be drawn continuously for the duration of the test. In this instance, the test would end when the temperature decreases to $T^*_{max,1} - 15$ °F ($T^*_{max,1} - 8.3$ °C) after the electrical power and/or fuel supplied to the water heater is shut off, as described in the following paragraphs.) Record this temperature as $T^*_{min,1}$. Following draw termination, determine the average outlet water temperature and the mass or volume removed during this first draw and record them as $\overline{T}^*_{del,i}$ and M^*_1 or V^*_1, respectively.

Initiate a second and, if applicable, successive draw(s) each time the applicable draw initiation criteria described in section 5.3.3.2 are satisfied. As required for the first draw, record the outlet water temperature 15 seconds after initiating each draw and at 5-second intervals thereafter until the draw is terminated. Determine the maximum outlet temperature that occurs during each draw and record it as $T^*_{max,i}$, where the subscript i refers to the draw number. Terminate each hot water draw when the outlet temperature decreases to $T^*_{max,i} - 15$ °F ($T^*_{max,i} - 8.3$ °C). Record this temperature as $T^*_{min,i}$. Calculate and record the average outlet temperature and the mass or volume removed during each draw ($\overline{T}^*_{del,i}$ and M^*_i or V^*_i, respectively). Continue this sequence of draw and recovery until one hour after the start of the test, then shut off the electrical power and/or fuel supplied to the water heater.

If a draw is occurring at one hour from the start of the test, continue this draw until the outlet temperature decreases to $T^*_{max,n} - 15$ °F ($T^*_{max,n} - 8.3$ °C), at which time the draw shall be immediately terminated. (The subscript n shall be used to denote measurements associated with the final draw.) If a draw is not occurring one hour after the start of the test, initiate a final draw at one hour, regardless of whether the criteria described in section 5.3.3.2 of this appendix are satisfied. This draw shall proceed for a minimum of 30 seconds and shall terminate when the outlet temperature first indicates a value less than or equal to the cut-off temperature used for the previous draw ($T^*_{min,n-1}$). If an outlet temperature greater than $T^*_{min,n-1}$ is not measured within 30 seconds of initiation of the draw, zero additional credit shall be given towards first-hour rating (*i.e.,* $M^*_n = 0$ or $V^*_n = 0$) based on the final draw. After the final draw is terminated, calculate and record the average outlet temperature and the mass or volume removed during the final draw ($\overline{T}^*_{del,n}$ and M^*_n or V^*_n, respectively).

5.4 *24-Hour Simulated Use Test.*

5.4.1 *Selection of Draw Pattern.* The water heater will be tested under a draw profile that depends upon the first-hour rating obtained following the test prescribed in section 5.3.3 of this appendix, or the maximum GPM rating obtained following the test prescribed in section 5.3.2 of this appendix, whichever is applicable. For water heaters that have been tested according to the first-hour rating procedure, one of four different patterns shall be applied based on the measured first-hour rating, as shown in Table I of this section. For water heater that have been tested according to the maximum GPM rating procedure, one of four different patterns shall be applied based on the maximum GPM, as shown in Table II of this section.

TABLE I—DRAW PATTERN TO BE USED BASED ON FIRST-HOUR RATING

First-hour rating greater than or equal to:	... and first-hour rating less than:	Draw pattern to be used in simulated-use test
0 gallons	18 gallons	Very-Small-Usage (Table III.1).
18 gallons	51 gallons	Low-Usage (Table III.2).
51 gallons	75 gallons	Medium-Usage (Table III.3).
75 gallons	No upper limit	High-Usage (Table III.4).

TABLE II—DRAW PATTERN TO BE USED BASED ON MAXIMUM GPM RATING

Maximum GPM rating greater than or equal to:	and maximum GPM rating less than:	Draw pattern to be used in simulated-use test
0 gallons/minute	1.7 gallons/minute	Very-Small-Usage (Table III.1).
1.7 gallons/minute	2.8 gallons/minute	Low-Usage (Table III.2).
2.8 gallons/minute	4 gallons/minute	Medium-Usage (Table III.3).
4 gallons/minute	No upper limit	High-Usage (Table III.4).

The draw patterns are provided in Tables III.1 through III.4 in section 5.5 of this appendix. Use the appropriate draw pattern when conducting the test sequence provided in section 5.4.2 of this appendix for water heaters with rated storage volumes greater than or equal to 2 gallons or section 5.4.3 of this appendix for water heaters with rated storage volumes less than 2 gallons.

5.4.2 *Test Sequence for Water Heaters with Rated Storage Volumes Greater Than or Equal to 2 Gallons.* If the water heater is turned off, fill the water heater with supply water and maintain supply water pressure as described in section 2.6 of this appendix. Turn on the water heater and associated heat pump unit, if present. If turned on in this fashion, the soak-in period described in section 5.2.4 of this appendix shall be implemented. If the water heater has undergone a first-hour rating test prior to conduct of the simulated-use test, allow the water heater to fully recover after completion of that test such that the main burner, heating elements, or heat pump compressor of the water heater are no longer raising the temperature of the stored water. In all cases, the water heater shall sit idle for 1 hour prior to the start of the 24-hour test; during which time no water is drawn from the unit and there is no energy input to the main heating elements, heat pump compressor, and/or burners. At the end of this period, the 24-hour simulated-use test will begin.

At the start of the 24-hour test, record the mean tank temperature ($\overline{T}_0$), and the electrical and/or fuel measurement readings, as appropriate. Begin the 24-hour simulated use test by withdrawing the volume specified

in the appropriate table in section 5.5 of this appendix (*i.e.,* Table III.1, Table III.2, Table III.3, or Table III.4, depending on the first-hour rating or maximum GPM rating) for the first draw at the flow rate specified in the applicable table. Record the time when this first draw is initiated and assign it as the test elapsed time (τ) of zero (0). Record the average storage tank and ambient temperature every minute throughout the 24-hour simulated-use test. At the elapsed times specified in the applicable draw pattern table in section 5.5 of this appendix for a particular draw pattern, initiate additional draws pursuant to the draw pattern, removing the volume of hot water at the prescribed flow rate specified by the table. The maximum allowable deviation from the specified volume of water removed for any single draw taken at a nominal flow rate of 1 GPM or 1.7 GPM is ±0.1 gallons (±0.4 liters). The maximum allowable deviation from the specified volume of water removed for any single draw taken at a nominal flow rate of 3 GPM is ±0.25 gallons (0.9 liters). The quantity of water withdrawn during the last draw shall be increased or decreased as necessary such that the total volume of water withdrawn equals the prescribed daily amount for that draw pattern ±1.0 gallon (±3.8 liters). If this adjustment to the volume drawn during the last draw results in no draw taking place, the test is considered invalid.

All draws during the 24-hour simulated-use test shall be made at the flow rates specified in the applicable draw pattern table in section 5.5 of this appendix, within a tolerance of ±0.25 gallons per minute (±0. 9 liters per minute). Measurements of the inlet and outlet temperatures shall be made 5 seconds after the draw is initiated and at every subsequent 3-second interval throughout the duration of each draw. Calculate and record the mean of the hot water discharge temperature and the cold water inlet temperature for each draw $\overline{T}_{del,i}$ and $\overline{T}_{in,i}$). Determine and record the net mass or volume removed (M_i or V_i), as appropriate, after each draw.

At the end of the first recovery period following the first draw, which may extend beyond subsequent draws, record the maximum mean tank temperature observed after cut-out, $\overline{T}_{max,1}$, and the energy consumed by an electric resistance, gas, or oil-fired water heater (including electrical energy), from the beginning of the test, Q_r. For heat pump water heaters, the total energy consumed during the first recovery by the heat pump (including compressor, fan, controls, pump, etc.) and, if applicable, by the resistive element(s) shall be recorded as Q_r.

The start of the portion of the test during which the standby loss coefficient is determined depends upon whether the unit has fully recovered from the first draw cluster. If a recovery is occurring at or within five minutes of the end of the final draw in the first draw cluster, as identified in the applicable draw pattern table in section 5.5 of this appendix, then the standby period starts when a maximum average tank temperature is observed starting five minutes after the end of the recovery period that follows that draw. If a recovery does not occur at or within five minutes of the end of the final draw in the first draw cluster, as identified in the applicable draw pattern table in section 5.5 of this appendix, then the standby period starts five minutes after the end of that draw. Determine and record the total electrical energy and/or fossil fuel consumed from the beginning of the test to the start of the standby period, $Q_{su,0}$.

In preparation for determining the energy consumed during standby, record the reading given on the electrical energy (watt-hour) meter, the gas meter, and/or the scale used to determine oil consumption, as appropriate. Record the mean tank temperature at the start of the standby period as $\overline{T}_{su,0}$. At 1-minute intervals, record the mean tank temperature and the electric and/or fuel instrument readings until the next draw is initiated. Just prior to initiation of the next draw, record the mean tank temperature as $\overline{T}_{su,f}$. If the water heater is undergoing recovery when the next draw is initiated, record the mean tank temperature $\overline{T}_{su,f}$ at the minute prior to the start of the recovery. The time at which this value occurs is the end of the standby period. Determine the total electrical energy and/or fossil fuel energy consumption from the beginning of the test to this time and record as $Q_{su,f}$. Record the time interval between the start of the standby period and the end of the standby period as $\tau_{stby,1}$. Record the time during which water is not being withdrawn from the water heater during the entire 24-hour period as $\tau_{stby,2}$.

In the event that the recovery period continues from the end of the last draw of the first draw cluster until the subsequent draw, the standby period will start after the end of the first recovery period after the last draw of the simulated-use test, when the temperature reaches the maximum average tank temperature, though no sooner than five minutes after the end of this recovery period. The standby period shall last eight hours, so testing will extend beyond the 24-hour duration of the simulated-use test. Determine and record the total electrical energy and/or fossil fuel consumed from the beginning of the simulated-use test to the start of the 8-hour standby period, $Q_{su,0}$. In preparation for determining the energy consumed during standby, record the reading(s) given on the electrical energy (watt-hour) meter, the gas meter, and/or the scale used to determine oil consumption, as appropriate. Record the mean tank temperature at the start of the standby period as $\overline{T}_{su,0}$. Record the mean tank temperature, the ambient temperature, and the electric and/or fuel instrument readings until the end of the 8 hour period. Record the mean tank temperature at the end of the 8 hour standby period as $\overline{T}_{su,f}$. If the water heater is undergoing recovery at the end of the standby period, record the mean tank temperature $\overline{T}_{su,f}$ at the minute prior to the start of the recovery, which will mark the end of the standby period. Determine the total electrical energy and/or fossil fuel energy consumption from the beginning of the test to the end of the standby period and record this value as $Q_{su,f}$. Record the time interval between the start of the standby period and the end of the standby period as $\tau_{stby,1}$.

Following the final draw of the prescribed draw pattern and subsequent recovery, allow the water heater to remain in the standby mode until exactly 24 hours have elapsed since the start of the simulated-use test (*i.e.,* since $\tau = 0$). During the last hour of the simulated-use test, power to the main burner, heating element, or compressor shall be disabled. At 24 hours, record the reading given by the gas meter, oil meter, and/or the electrical energy meter as appropriate. Determine the fossil fuel and/or electrical energy consumed during the entire 24-hour simulated-use test and designate the quantity as Q.

5.4.3 *Test Sequence for Water Heaters With Rated Storage Volume Less Than 2 Gallons.*

Establish normal operation with the discharge water temperature at 125 °F ± 5 °F (51.7 °C ± 2.8 °C) and set the flow rate as determined in section 5.2 of this appendix. Prior to commencement of the 24-hour simulated-use test, the unit shall remain in an idle state in which controls are active but no water is drawn through the unit for a period of one hour. With no draw occurring, record the reading given by the gas meter and/or the electrical energy meter as appropriate. Begin the 24-hour simulated-use test by withdrawing the volume specified in Tables III.1 through III.4 of section 5.5 of this appendix for the first draw at the flow rate specified. Record the time when this first draw is initiated and designate it as an elapsed time, τ, of 0. At the elapsed times specified in Tables III.1 through III.4 for a particular draw pattern, initiate additional draws, removing the volume of hot water at the prescribed flow rate specified in Tables III.1 through III.4. The maximum allowable deviation from the specified volume of water removed for any single draw taken at a nominal flow rate less than or equal to 1.7 GPM (6.4 L/min) is ±0.1 gallons (±0.4 liters). The maximum allowable deviation from the specified volume of water removed for any single draw taken at a nominal flow rate of 3 GPM (11.4 L/min) is ±0.25 gallons (0.9 liters). The quantity of water drawn during the final draw shall be increased or decreased as necessary such that the total volume of water withdrawn equals the prescribed daily amount for that draw pattern ±1.0 gallon (±3.8 liters). If this adjustment to the volume drawn in the last draw results in no draw taking place, the test is considered invalid.

Measurements of the inlet and outlet water temperatures shall be made 5 seconds after the draw is initiated and at every 3-second interval thereafter throughout the duration of the draw. Calculate the mean of the hot water discharge temperature and the cold water inlet temperature for each draw. Record the mass of the withdrawn water or the water meter reading, as appropriate, after each draw. At the end of the recovery period following the first draw, determine and record the fossil fuel and/or electrical energy consumed, Q_r. Following the final draw and subsequent recovery, allow the water heater to remain in the standby mode until exactly 24 hours have elapsed since the start of the test (*i.e.,* since $\tau = 0$). At 24 hours, record the reading given by the gas meter, oil meter, and/or the electrical energy meter, as appropriate. Determine the fossil fuel and/or electrical energy consumed during the entire

24-hour simulated-use test and designate the quantity as Q.

5.5 *Draw Patterns.* The draw patterns to be imposed during 24-hour simulated-use tests are provided in Tables III.1 through III.4. Subject each water heater under test to one of these draw patterns based on its first-hour rating or maximum GPM rating, as discussed in section 5.4.1 of this appendix. Each draw pattern specifies the elapsed time in hours and minutes during the 24-hour test when a draw is to commence, the total volume of water in gallons (liters) that is to be removed during each draw, and the flow rate at which each draw is to be taken, in gallons (liters) per minute.

TABLE III.1—VERY-SMALL-USAGE DRAW PATTERN

Draw No.	Time during test [hh:mm]	Volume [gallons (L)]	Flow Rate ** [GPM (L/min)]
1 *	0:00	2.0 (7.6)	1 (3.8)
2 *	1:00	1.0 (3.8)	1 (3.8)
3 *	1:05	0.5 (1.9)	1 (3.8)
4 *	1:10	0.5 (1.9)	1 (3.8)
5 *	1:15	0.5 (1.9)	1 (3.8)
6	8:00	1.0 (3.8)	1 (3.8)
7	8:15	2.0 (7.6)	1 (3.8)
8	9:00	1.5 (5.7)	1 (3.8)
9	9:15	1.0 (3.8)	1 (3.8)
Total Volume Drawn Per Day: 10 gallons (38 L)			

* Denotes draws in first draw cluster.

** Should the water heater have a maximum GPM rating less than 1 GPM (3.8 L/min), then all draws shall be implemented at a flow rate equal to the rated maximum GPM.

TABLE III.2—LOW-USAGE DRAW PATTERN

Draw No.	Time during test [hh:mm]	Volume [gallons (liters)]	Flow rate [GPM (L/min)]
1 *	0:00	15.0 (56.8)	1.7 (6.4)
2 *	0:30	2.0 (7.6)	1 (3.8)
3 *	1:00	1.0 (3.8)	1 (3.8)
4	10:30	6.0 (22.7)	1.7 (6.4)
5	11:30	4.0 (15.1)	1.7 (6.4)
6	12:00	1.0 (3.8)	1 (3.8)
7	12:45	1.0 (3.8)	1 (3.8)
8	12:50	1.0 (3.8)	1 (3.8)
9	16:15	2.0 (7.6)	1 (3.8)
10	16:45	2.0 (7.6)	1.7 (6.4)
11	17:00	3.0 (11.4)	1.7 (6.4)
Total Volume Drawn Per Day: 38 gallons (144 L)			

* Denotes draws in first draw cluster.

TABLE III.3—MEDIUM-USAGE DRAW PATTERN

Draw No.	Time during test [hh:mm]	Volume [gallons (liters)]	Flow rate [GPM (L/min)]
1 *	0:00	15.0 (56.8)	1.7 (6.4)
2 *	0:30	2.0 (7.6)	1 (3.8)
3 *	1:40	9.0 (34.1)	1.7 (6.4)
4	10:30	9.0 (34.1)	1.7 (6.4)
5	11:30	5.0 (18.9)	1.7 (6.4)
6	12:00	1.0 (3.8)	1 (3.8)
7	12:45	1.0 (3.8)	1 (3.8)
8	12:50	1.0 (3.8)	1 (3.8)
9	16:00	1.0 (3.8)	1 (3.8)
10	16:15	2.0 (7.6)	1 (3.8)
11	16:45	2.0 (7.6)	1.7 (6.4)
12	17:00	7.0 (26.5)	1.7 (6.4)
Total Volume Drawn Per Day: 55 gallons (208 L)			

* Denotes draws in first draw cluster.

TABLE III.4—HIGH-USAGE DRAW PATTERN

Draw No.	Time during test [hh:mm]	Volume [gallons (liters)]	Flow rate [GPM (L/min)]
1*	0:00	27.0 (102)	3 (11.4)
2*	0:30	2.0 (7.6)	1 (3.8)
3*	0:40	1.0 (3.8)	1 (3.8)
4*	1:40	9.0 (34.1)	1.7 (6.4)
5	10:30	15.0 (56.8)	3 (11.4)
6	11:30	5.0 (18.9)	1.7 (6.4)
7	12:00	1.0 (3.8)	1 (3.8)
8	12:45	1.0 (3.8)	1 (3.8)
9	12:50	1.0 (3.8)	1 (3.8)
10	16:00	2.0 (7.6)	1 (3.8)
11	16:15	2.0 (7.6)	1 (3.8)
12	16:30	2.0 (7.6)	1.7 (6.4)
13	16:45	2.0 (7.6)	1.7 (6.4)
14	17:00	14.0 (53.0)	3 (11.4)
Total Volume Drawn Per Day: 84 gallons (318 L)			

* Denotes draws in first draw cluster.

6. Computations

6.1 *First-Hour Rating Computation.* For the case in which the final draw is initiated at or prior to one hour from the start of the test, the first-hour rating, F_{hr}, shall be computed using,

$$F_{hr} = \sum_{i=1}^{n} V_i^*$$

Where:

n = the number of draws that are completed during the first-hour rating test.

V^*_i = the volume of water removed during the *i*th draw of the first-hour rating test, gal (L) or, if the mass of water is being measured,

$$V_i^* = \frac{M_i^*}{\rho}$$

Where:

M^*_i = the mass of water removed during the *i*th draw of the first-hour rating test, lb (kg).

ρ = the water density corresponding to the average outlet temperature measured during the *i*th draw, ($\overline{T}^*_{del,i}$), lb/gal (kg/L).

For the case in which a draw is not in progress at one hour from the start of the test and a final draw is imposed at the elapsed time of one hour, the first-hour rating shall be calculated using

$$F_{hr} = \sum_{i=1}^{n-1} V_i^* + V_n^* \left(\frac{\overline{T}^*_{del,n} - T^*_{min,n-1}}{\overline{T}^*_{del,n-1} - T^*_{min,n-1}} \right)$$

where n and V^*_i are the same quantities as defined above, and

V^*_n = the volume of water drawn during the *n*th (final) draw of the first-hour rating test, gal (L).

$\overline{T}^*_{del,n-1}$ = the average water outlet temperature measured during the *(n − 1)*th draw of the first-hour rating test, °F (°C).

$\overline{T}^*_{del,n}$ = the average water outlet temperature measured during the *n*th (final) draw of the first-hour rating test, °F (°C).

$T^*_{min,n-1}$ = the minimum water outlet temperature measured during the *(n − 1)*th draw of the first-hour rating test, °F (°C).

6.2 *Maximum GPM (L/min) Rating Computation.* Compute the maximum GPM (L/min) rating, F_{max}, as:

$$F_{max} = \frac{M_{10m}(\overline{T}_{del} - \overline{T}_{in})}{10(\rho)(125°\text{F} - 58°\text{F})}$$

or,

$$F_{max} = \frac{M_{10m}(\overline{T}_{del} - \overline{T}_{in})}{10(\rho)(51.7°\text{C} - 14.4°\text{C})}$$

which may be expressed as:

$$F_{max} = \frac{M_{10m}(\overline{T}_{del} - \overline{T}_{in})}{10(\rho)(67°\text{F})}$$

or,

$$F_{max} = \frac{M_{10m}(\overline{T}_{del} - \overline{T}_{in})}{10(\rho)(37.3°\text{C})}$$

Where:

M_{10m} = the mass of water collected during the 10-minute test, lb (kg).

$\overline{T}_{del}$ = the average delivery temperature, °F (°C).

$\overline{T}_{in}$ = the average inlet temperature, °F (°C).

ρ = the density of water at the average delivery temperature, lb/gal (kg/L).

If a water meter is used, the maximum GPM (L/min) rating is computed as:

$$F_{max} = \frac{V_{10m}(\overline{T}_{del} - \overline{T}_{in})}{10(67°\text{F})}$$

or,

$$F_{max} = \frac{V_{10m}(\overline{T}_{del} - \overline{T}_{in})}{10(37.3°\text{C})}$$

Where:

V_{10m} = the volume of water measured during the 10-minute test, gal (L).

$\overline{T}_{del}$ = as defined in this section.

$\overline{T}_{in}$ = as defined in this section.

6.3 *Computations for Water Heaters with a Rated Storage Volume Greater Than or Equal to 2 Gallons.*

6.3.1 *Storage Tank Capacity.* The storage tank capacity, $V_{st,}$ is computed as follows:

$$V_{st} = \frac{(W_f - W_t)}{\rho}$$

Where:

V_{st} = the storage capacity of the water heater, gal (L)

W_f = the weight of the storage tank when completely filled with water, lb (kg)

W_t = the (tare) weight of the storage tank when completely empty, lb (kg)

ρ = the density of water used to fill the tank measured at the temperature of the water, lb/gal (kg/L)

6.3.2 *Recovery Efficiency.* The recovery efficiency for gas, oil, and heat pump storage-type water heaters, η_r, is computed as:

$$\eta_r = \frac{M_1 C_{p1}(\overline{T}_{del,1} - \overline{T}_{in,1})}{Q_r} + \frac{V_{st}\rho_2 C_{p2}(\overline{T}_{max,1} - \overline{T}_0)}{Q_r}$$

Where:

M_1 = total mass removed from the start of the 24-hour simulated-use test to the end of the first recovery period, lb (kg), or, if the volume of water is being measured,

$M_1 = V_1\rho_1$

Where:

V_1 = total volume removed from the start of the 24-hour simulated-use test to the end of the first recovery period, gal (L).

ρ_1 = density of the water at the water temperature measured at the point where the flow volume is measured, lb/gal (kg/L).

C_{p1} = specific heat of the withdrawn water evaluated at $(\overline{T}_{del,1} + \overline{T}_{in,1})/2$, Btu/(lb·°F) (kJ/(kg·°C))

$\overline{T}_{del,1}$ = average water outlet temperature measured during the draws from the start of the 24-hour simulated-use test to the end of the first recovery period, °F (°C).

$\overline{T}_{in,1}$ = average water inlet temperature measured during the draws from the start

of the 24-hour simulated-use test to the end of the first recovery period, °F (°C).

V_{st} = as defined in section 6.3.1.

ρ_2 = density of stored hot water evaluated at $(\overline{T}_{max,1} + \overline{T}_o)/2$, lb/gal (kg/L).

C_{p2} = specific heat of stored hot water evaluated at $(\overline{T}_{max,1} + \overline{T}_o)/2$, Btu/(lb·°F) (kJ/(kg·°C).

$\overline{T}_{max,1}$ = maximum mean tank temperature recorded after cut-out following the first recovery of the 24-hour simulated use test, °F (°C).

$\overline{T}_o$ = maximum mean tank temperature recorded prior to the first draw of the 24-hour simulated-use test, °F (°C).

Q_r = the total energy used by the water heater between cut-out prior to the first draw and cut-out following the first recovery period, including auxiliary energy such as pilot lights, pumps, fans, etc., Btu (kJ). (Electrical auxiliary energy shall be converted to thermal energy using the following conversion: 1 kWh = 3412 Btu).

The recovery efficiency for electric water heaters with immersed heating elements is assumed to be 98 percent.

6.3.3 *Hourly Standby Losses.* The energy consumed as part of the standby loss test of the 24-hour simulated-use test, Q_{stby}, is computed as:

$Q_{stby} = Q_{su,f} - Q_{su,o}$

Where:

$Q_{su,0}$ = cumulative energy consumption of the water heater from the start of the 24-hour simulated-use test to the time at which the maximum mean tank temperature is attained starting five minutes after the recovery following the end of the first draw cluster, Btu (kJ).

$Q_{su,f}$ = cumulative energy consumption of the water heater from the start of the 24-hour simulated-use test to the minute prior to the start of the draw following the end of the first draw cluster or the minute prior to a recovery occurring at the start of the draw following the end of the first draw cluster, Btu (kJ).

The hourly standby energy losses are computed as:

$$Q_{hr} = \frac{Q_{stby} - \frac{V_{st}\rho C_p\left(\overline{T}_{su,f} - \overline{T}_{su,0}\right)}{\eta_r}}{\tau_{stby,1}}$$

Where:

Q_{hr} = the hourly standby energy losses of the water heater, Btu/h (kJ/h).

V_{st} = as defined in section 6.3.1 of this appendix.

ρ = density of stored hot water, $(\overline{T}_{su,f} + \overline{T}_{su,0})/2$, lb/gal (kg/L).

C_p = specific heat of the stored water, $(\overline{T}_{su,f} + \overline{T}_{su,0})/2$, Btu/(lb·F), (kJ/(kg·K))

$\overline{T}_{su,f}$ = the mean tank temperature observed at the minute prior to the start of the draw following the first draw cluster or the minute prior to a recovery occurring at the start of the draw following the end of the first draw cluster, °F (°C).

$\overline{T}_{su,0}$ = the maximum mean tank temperature observed starting five minutes after the first recovery following the final draw of the first draw cluster, °F (°C).

η_r = as defined in section 6.3.2 of this appendix.

$\tau_{stby,1}$ = elapsed time between the time at which the maximum mean tank temperature is observed starting five minutes after recovery from the first draw cluster and the minute prior to the start of the first draw following the end of the first draw cluster of the 24-hour simulated-use test or the minute prior to a recovery occurring at the start of the draw following the end of the first draw cluster, h.

The standby heat loss coefficient for the tank is computed as:

$$UA = \frac{Q_{hr}}{\overline{T}_{t,stby,1} - \overline{T}_{a,stby,1}}$$

Where:

UA = standby heat loss coefficient of the storage tank, Btu/(h·°F), (kJ/(h·°C).

$\overline{T}_{t,stby,1}$ = overall average storage tank temperature between the time when the maximum mean tank temperature is observed starting five minutes after cut-out following the first draw cluster and the minute prior to commencement of the next draw following the first draw cluster of the 24-hour simulated-use test or the minute prior to a recovery occurring at the start of the draw following the end of the first draw cluster, °F (°C).

$\overline{T}_{a,stby,1}$ = overall average ambient temperature between the time when the maximum mean tank temperature is observed starting five minutes after cut-out following the first draw cluster and the minute prior to commencement of the next draw following the first draw cluster of the 24-hour simulated-use test or the minute prior to a recovery occurring at the start of the draw following the end of the first draw cluster, °F (°C).

6.3.4 *Daily Water Heating Energy Consumption.* The daily water heating energy consumption, Q_d, is computed as:

$$Q_d = Q - \frac{V_{st}\rho C_p(\overline{T}_{24} - \overline{T}_0)}{\eta_r}$$

Where:

$Q = Q_f + Q_e$ = total energy used by the water heater during the 24-hour simulated-use test, including auxiliary energy such as pilot lights, pumps, fans, etc., Btu (kJ). (Electrical energy shall be converted to thermal energy using the following conversion: 1kWh = 3412 Btu.)

Q_f = total fossil fuel energy used by the water heater during the 24-hour simulated-use test, Btu (kJ).

Q_e = total electrical energy used during the 24-hour simulated-use test, Btu (kJ).

V_{st} = as defined in section 6.3.1 of this appendix.

ρ = density of the stored hot water, evaluated at $(\overline{T}_{24} + \overline{T}_0)/2$, lb/gal (kg/L)

C_p = specific heat of the stored water, evaluated at $(\overline{T}_{24} + \overline{T}_0)/2$, Btu/(lb·F), (kJ/(kg·K)).

$\overline{T}_{24}$ = mean tank temperature at the end of the 24-hour simulated-use test, °F (°C).

$\overline{T}_0$ = mean tank temperature at the beginning of the 24-hour simulated-use test, recorded one minute before the first draw is initiated, °F (°C).

η_r = as defined in section 6.3.2 of this appendix.

6.3.5 *Adjusted Daily Water Heating Energy Consumption.* The adjusted daily water heating energy consumption, Q_{da}, takes into account that the ambient temperature may differ from the nominal value of 67.5 °F (19.7°C) due to the allowable variation in surrounding ambient temperature of 65 °F (18.3 °C) to 70 °C (21.1°C). The adjusted daily water heating energy consumption is computed as:

$$Q_{da} = Q_d - \left(67.5°\text{F} - \overline{T}_{a,stby,2}\right) UA\, \tau_{stby,2}$$

or,

$$Q_{da} = Q_d - \left(19.7°\text{C} - \overline{T}_{a,stby,2}\right) UA\, \tau_{stby,2}$$

Where:

Q_{da} = the adjusted daily water heating energy consumption, Btu (kJ).

Q_d = as defined in section 6.3.4 of this appendix.

$\overline{T}_{a,stby,2}$ = the average ambient temperature during the total standby portion, $\tau_{stby,2}$, of the 24-hour simulated-use test, °F (°C).

UA = as defined in section 6.3.3 of this appendix.

$\tau_{stby,2}$ = the number of hours during the 24-hour simulated-use test when water is not being withdrawn from the water heater.

A modification is also needed to take into account that the temperature difference between the outlet water temperature and supply water temperature may not be equivalent to the nominal value of 67 °F (125 °F–58 °F) or 37.3 °C (51.7 °C–14.4 °C). The following equations adjust the experimental data to a nominal 67 °F (37.3 °C) temperature rise.

The energy used to heat water, Btu/day (kJ/day), may be computed as:

$$Q_{HW} = \sum_{i=1}^{N} \frac{M_i C_{pi}\left(\overline{T}_{del,i} - \overline{T}_{in,i}\right)}{\eta_r}$$

Where:

N = total number of draws in the draw pattern.

M_i = the mass withdrawn for the *i*th draw (i = 1 to N), lb (kg)

C_{pi} = the specific heat of the water of the *i*th draw evaluated at $(\overline{T}_{del,i} + \overline{T}_{in,i})/2$, Btu/(lb·°F) (kJ/(kg·°C)).

$\overline{T}_{del,i}$ = the average water outlet temperature measured during the *i*th draw (i = 1 to N), °F (°C).

$\overline{T}_{in,i}$ = the average water inlet temperature measured during the *i*th draw (i = 1 to N), °F (°C).

η_r = as defined in section 6.3.2 of this appendix.

The energy required to heat the same quantity of water over a 67 °F (37.3 °C) temperature rise, Btu/day (kJ/day), is:

$$Q_{HW,67°\text{F}} = \sum_{i=1}^{N} \frac{M_i C_{pi}(125°\text{F} - 58°\text{F})}{\eta_r}$$

or

$$Q_{HW,37.3°\text{C}} = \sum_{i=1}^{N} \frac{M_i C_{pi}(51.7°\text{C} - 14.4°\text{C})}{\eta_r}$$

The difference between these two values is:

$Q_{HWD} = Q_{HW,67\ °F} - Q_{HW}$

or $Q_{HWD} = Q_{HW,37.3°C} - Q_{HW}$

This difference (Q_{HWD}) must be added to the adjusted daily water heating energy consumption value. Thus, the daily energy consumption value which takes into account that the ambient temperature may not be 67.5 °F (19.7 °C) and that the temperature rise across the storage tank may not be 67 °F (37.3 °C) is:

$Q_{dm} = Q_{da} + Q_{HWD}$

6.3.6 *Uniform Energy Factor.* The uniform energy factor, UEF, is computed as:

$$UEF = \sum_{i=1}^{N} \frac{M_i C_{pi}(125°\text{F} - 58°\text{F})}{Q_{dm}}$$

or,

$$UEF = \sum_{i=1}^{N} \frac{M_i C_{pi}(51.7°\text{C} - 14.4°\text{C})}{Q_{dm}}$$

Where:

N = total number of draws in the draw pattern

Q_{dm} = the modified daily water heating energy consumption as computed in accordance with section 6.3.5 of this appendix, Btu (kJ)

M_i = the mass withdrawn for the *i*th draw (i = 1 to N), lb (kg)

C_{pi} = the specific heat of the water of the *i*th draw, evaluated at (125 °F + 58 °F)/2 =

91.5 °F ((51.7 °C + 14.4 °C)/2 = 33 °C), Btu/(lb· °F) (kJ/(kg· °C)).

6.3.7 *Annual Energy Consumption.* The annual energy consumption for water heaters with rated storage volumes greater than or equal to 2 gallons is computed as:

$$E_{annual} = 365\ x\ \frac{(V)(\rho)(C_P)(67)}{UEF}$$

Where:

UEF = the uniform energy factor as computed in accordance with section 6.3.6 of this appendix

365 = the number of days in a year

V = the volume of hot water drawn during the applicable draw pattern, gallons

= 10 for the very-small-usage draw pattern

= 38 for the low-usage draw pattern

= 55 for the medium-usage draw pattern

= 84 for high-usage draw pattern

ρ = 8.24 lb_m/gallon, the density of water at 125 °F

C_P = 1.00 Btu/lb_m °F, the specific heat of water at 91.5 °F

67 = the nominal temperature difference between inlet and outlet water

6.3.8 *Annual Electrical Energy Consumption.* The annual electrical energy consumption in kilowatt-hours for water heaters with rated storage volumes greater than or equal to 2 gallons, $E_{annual,e}$, is computed as:

$E_{annual,e} = E_{annual}*(Q_e/Q)/3412$

Where:

E_{annual} = the annual energy consumption as determined in accordance with section 6.3.7, Btu (kJ)

Q_e = the daily electrical energy consumption as defined in section 6.3.4 of this appendix, Btu (kJ).

Q = total energy used by the water heater during the 24-hour simulated-use test in accordance with section 6.3.4 of this appendix, Btu (kJ)

3412 = conversion factor from Btu to kWh

6.3.9 *Annual Fossil Fuel Energy Consumption.* The annual fossil fuel energy consumption for water heaters with rated storage volumes greater than or equal to 2 gallons, $E_{annual,f}$, is computed as:

$E_{annual,f} = E_{annual} - (E_{annual,e} \times 3412)$

Where:

E_{annual} = the annual energy consumption as determined in accordance with section 6.3.7 of this appendix, Btu (kJ)

$E_{annual,e}$ = the annual electrical energy consumption as determined in accordance with section 6.3.8 of this appendix, kWh

3412 = conversion factor from kWh to Btu

6.4 *Computations for Water Heaters With Rated Storage Volume Less Than 2 Gallons.*

6.4.1 *Recovery Efficiency.* The recovery efficiency, η_r, is computed as:

$$\eta_r = \frac{M_1 C_{p1}\left(\overline{T}_{del,1} - \overline{T}_{in,1}\right)}{Q_r}$$

Where:

M_1 = total mass removed during the first draw of the 24-hour simulated-use test, lb (kg), or, if the volume of water is being measured, $M_1 = V_1 \cdot \rho$

Where:

V_1 = total volume removed during the first draw of the 24-hour simulated-use test, gal (L).

ρ = density of the water at the water temperature measured at the point where the flow volume is measured, lb/gal (kg/L).

C_{p1} = specific heat of the withdrawn water, $(\overline{T}_{del,1} \mp \overline{T}_{in,1})/2$, Btu/(lb · °F) (kJ/(kg · °C)).

$\overline{T}_{del,1}$ = average water outlet temperature measured during the first draw of the 24-hour simulated-use test, °F (°C).

$\overline{T}_{in,1}$ = average water inlet temperature measured during the first draw of the 24-hour simulated-use test, °F (°C).

Q_r = the total energy used by the water heater between cut-out prior to the first draw and cut-out following the first draw, including auxiliary energy such as pilot lights, pumps, fans, etc., Btu (kJ). (Electrical auxiliary energy shall be converted to thermal energy using the following conversion: 1 kWh = 3412 Btu.)

6.4.2 Daily Water Heating Energy Consumption. The daily water heating energy consumption, Q_d, is computed as:

$Q_d = Q$

Where:

$Q = Q_f + Q_e$ = the energy used by the water heater during the 24-hour simulated-use test.

Q_f = total fossil fuel energy used by the water heater during the 24-hour simulated-use test, Btu (kJ).

Q_e = total electrical energy used during the 24-hour simulated-use test, Btu (kJ).

A modification is needed to take into account that the temperature difference between the outlet water temperature and supply water temperature may not be equivalent to the nominal value of 67 °F (125 °F–58 °F) or 37.3 °C (51.7 °C–14.4 °C). The following equations adjust the experimental data to a nominal 67 °F (37.3 °C) temperature rise.

The energy used to heat water may be computed as:

$$Q_{HW} = \sum_{i=1}^{N} \frac{M_i C_{pi}\left(\overline{T}_{del,i} - \overline{T}_{in,i}\right)}{\eta_r}$$

Where:

N = total number of draws in the draw pattern

M_i = the mass withdrawn for the *i*th draw (*i* = 1 to N), lb (kg)

C_{pi} = the specific heat of the water of the *i*th draw evaluated at $(\overline{T}_{del,i} + \overline{T}_{in,i})/2$, Btu/(lb · °F) (kJ/(kg · °C)).

$\overline{T}_{del,i}$ = the average water outlet temperature measured during the *i*th draw (*i* = 1 to N), °F (°C).

$\overline{T}_{in,i}$ = the average water inlet temperature measured during the *i*th draw (*i* = 1 to N), °F (°C).

η_r = as defined in section 6.4.1 of this appendix.

The energy required to heat the same quantity of water over a 67 °F (37.3 °C) temperature rise is:

$$Q_{HW,67°F} = \sum_{i=1}^{N} \frac{M_i C_{pi}(125°F - 58°F)}{\eta_r}$$

or

$$Q_{HW,37.3°C} = \sum_{i=1}^{N} \frac{M_i C_{pi}(51.7°C - 14.4°C)}{\eta_r}$$

Where:

N = total number of draws in the draw pattern

M_i = the mass withdrawn during the *i*th draw, lb (kg)

C_{pi} = the specific heat of water of the *i*th draw, Btu/(lb · °F) (kJ/(kg · °C))

η_r = as defined in section 6.4.1 of this appendix.

The difference between these two values is:

$$Q_{HWD} = Q_{HW,67°F} - Q_{HW}$$

or

$$Q_{HWD} = Q_{HW,37.3°C} - Q_{HW}$$

This difference (Q_{HWD}) must be added to the daily water heating energy consumption value. Thus, the daily energy consumption value, which takes into account that the temperature rise across the water heater may not be 67 °F (37.3 °C), is:

$Q_{dm} = Q_d + Q_{HWD}$

6.4.3 *Uniform Energy Factor.* The uniform energy factor, UEF, is computed as:

$$UEF = \sum_{i=1}^{N} \frac{M_i C_{pi}(125°F - 58°F)}{Q_{dm}}$$

or,

$$UEF = \sum_{i=1}^{N} \frac{M_i C_{pi}(51.7°C - 14.4°C)}{Q_{dm}}$$

Where:

N = total number of draws in the draw pattern

Q_{dm} = the modified daily water heating energy consumption as computed in accordance with section 6.4.2 of this appendix, Btu (kJ)

M_i = the mass withdrawn for the *i*th draw (i = 1 to N), lb (kg)

C_{pi} = the specific heat of the water at the *i*th draw, evaluated at (125 °F + 58 °F)/2 = 91.5 °F ((51.7 °C + 14.4 °C)/2 = 33.1 °C), Btu/(lb · °F) (kJ/(kg · °C)).

6.4.4 *Annual Energy Consumption.* The annual energy consumption for water heaters with rated storage volumes less than 2 gallons, $E_{annual,}$ is computed as:

$$E_{annual} = 365\ x\ \frac{(V)(\rho)(C_P)(67)}{UEF}$$

Where:

UEF = the uniform energy factor as computed in accordance with section 6.4.3 of this appendix

365 = the number of days in a year.

V = the volume of hot water drawn during the applicable draw pattern, gallons

= 10 for the very-small-usage draw pattern

= 38 for the low-usage draw pattern

= 55 for the medium-usage draw pattern

= 84 for high-usage draw pattern

ρ = 8.24 lb_m/gallon, the density of water at 125 °F

C_P = 1.00 Btu/lb_m °F, the specific heat of water at 91.5 °F

67 = the nominal temperature difference between inlet and outlet water

6.4.5 *Annual Electrical Energy Consumption.* The annual electrical energy consumption in kilowatt–hours for water heaters with rated storage volumes less than 2 gallons, $E_{annual,\ e}$, is computed as:

$E_{annual,e} = E_{annual}*(Q_e/Q)/3412$

Where:

Q_e = the daily electrical energy consumption as defined in section 6.4.2 of this appendix, Btu (kJ)

E_{annual} = the annual energy consumption as determined in accordance with section 6.4.4 of this appendix, Btu (kJ)

Q = total energy used by the water heater during the 24-hour simulated-use test in accordance with section 6.4.2 of this appendix, Btu (kJ)

Q_{dm} = the modified daily water heating energy consumption as computed in accordance with section 6.4.2 of this appendix, Btu (kJ)

3412 = conversion factor from Btu to kWh

6.4.6 *Annual Fossil Fuel Energy Consumption.* The annual fossil fuel energy consumption for water heaters with rated storage volumes less than 2 gallons, $E_{annual,f}$, is computed as:

$E_{annual,f} = E_{annual} - (E_{annual,e} \times 3412)$

Where:

$E_{annual,e}$ = the annual electrical energy consumption as defined in section 6.4.5 of this appendix, kWh.

E_{annual} = the annual energy consumption as defined in section 6.4.4 of this appendix, Btu (kJ)

3412 = conversion factor from kWh to Btu

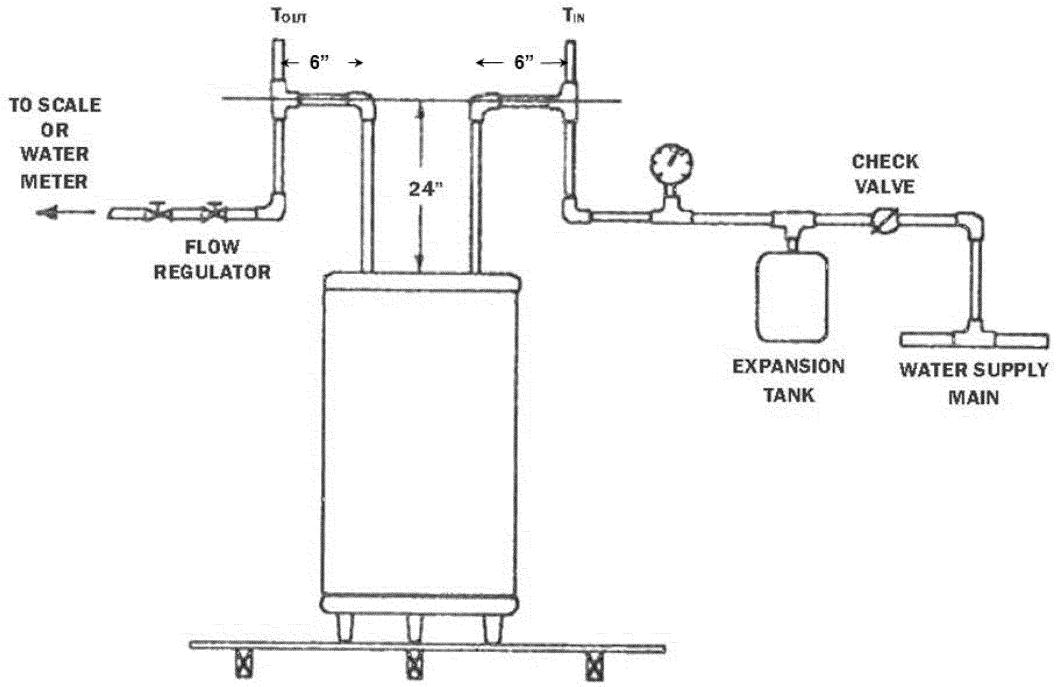

Figure 1.

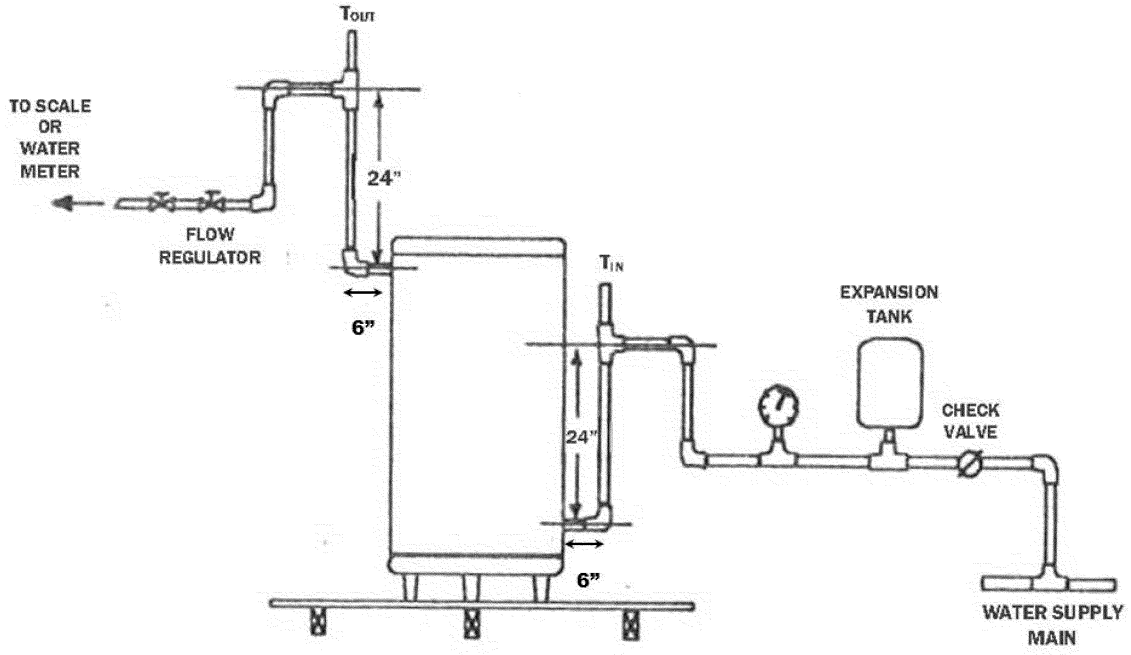

Figure 2.

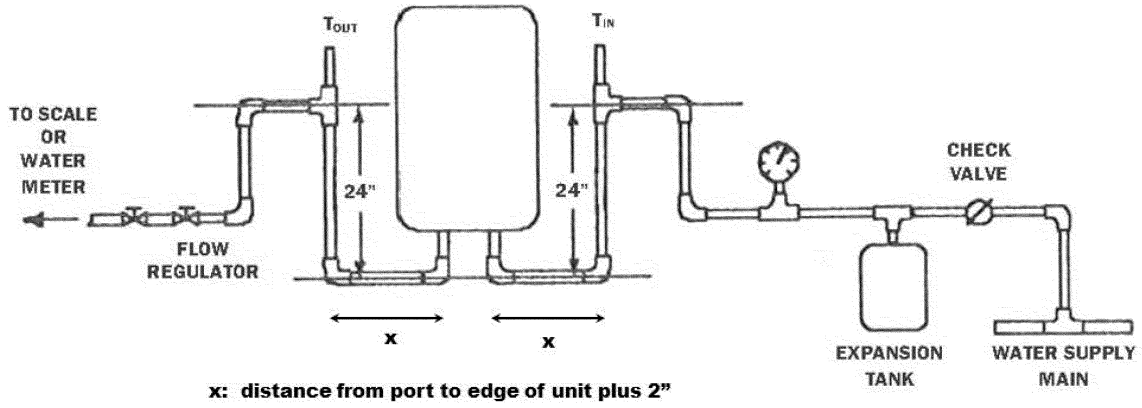
TOUT
TIN
TO SCALE OR WATER METER
FLOW REGULATOR
24"
24"
x
x
CHECK VALVE
EXPANSION TANK
WATER SUPPLY MAIN
x: distance from port to edge of unit plus 2"

Figure 3.

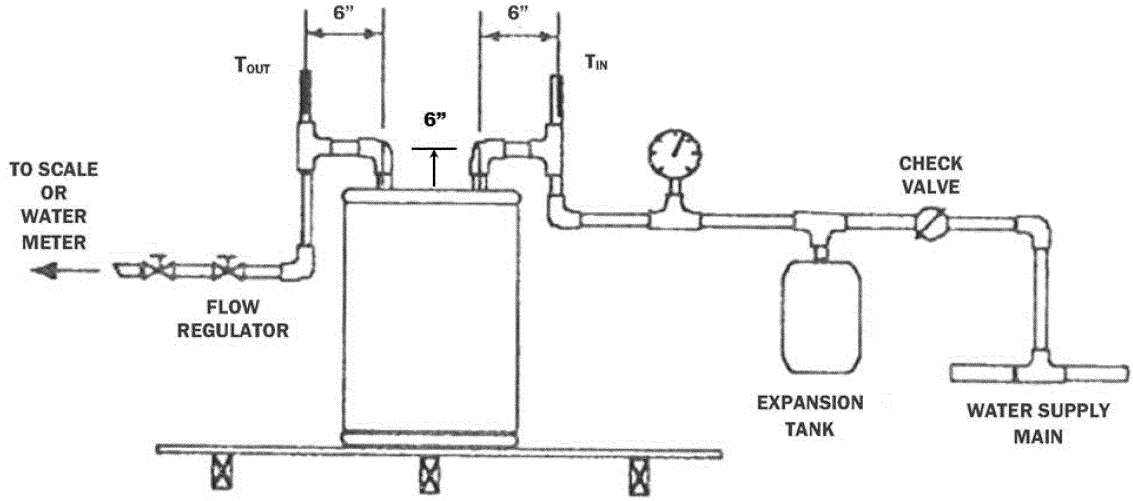

Figure 4.

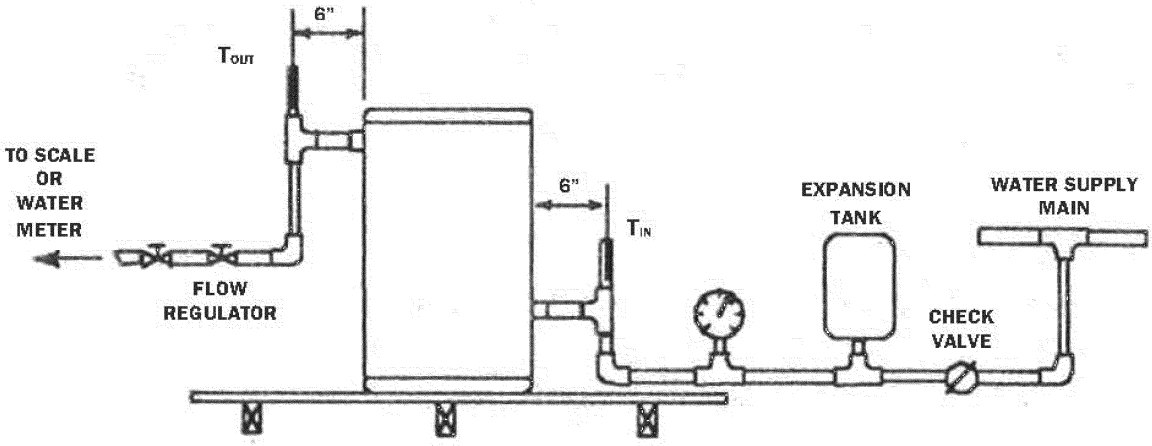

Figure 5.

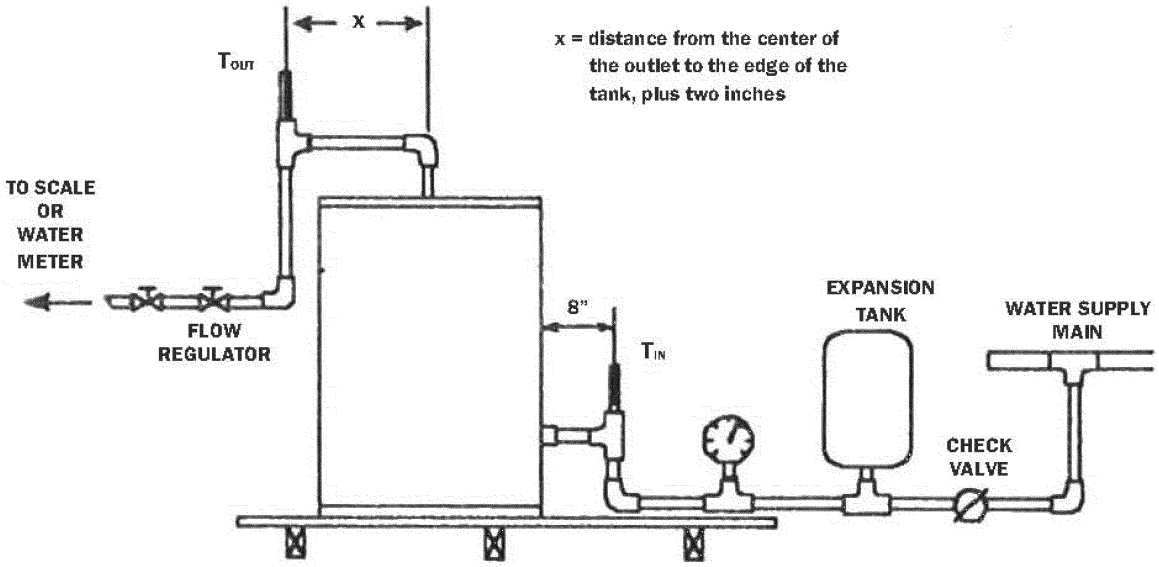
x
x = distance from the center of the outlet to the edge of the tank, plus two inches
TOUT
TO SCALE OR WATER METER
FLOW REGULATOR
8"
TIN
EXPANSION TANK
WATER SUPPLY MAIN
CHECK VALVE

Figure 6.

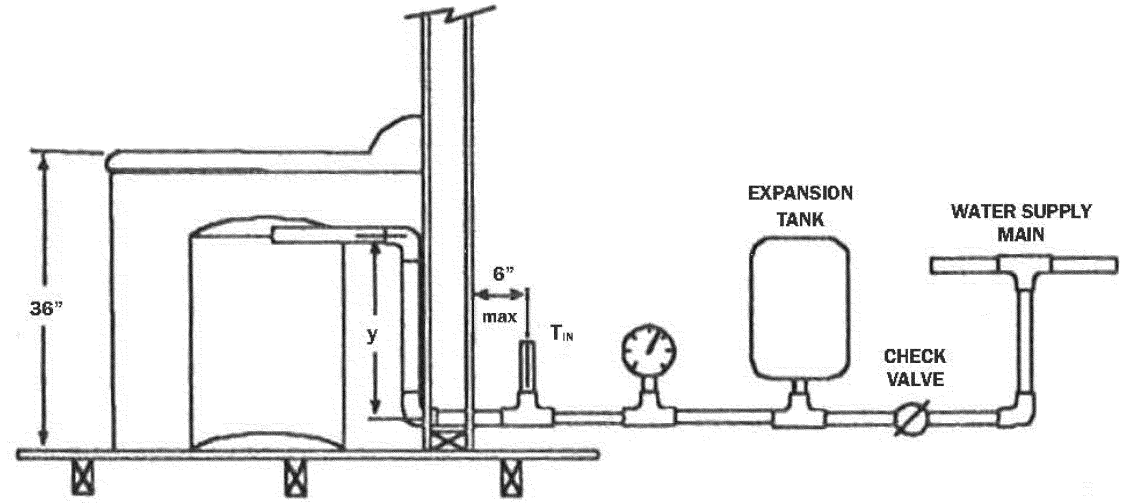

(a)

y = 24 inches or the maximum distance permitted given the water heater construction, whichever is less

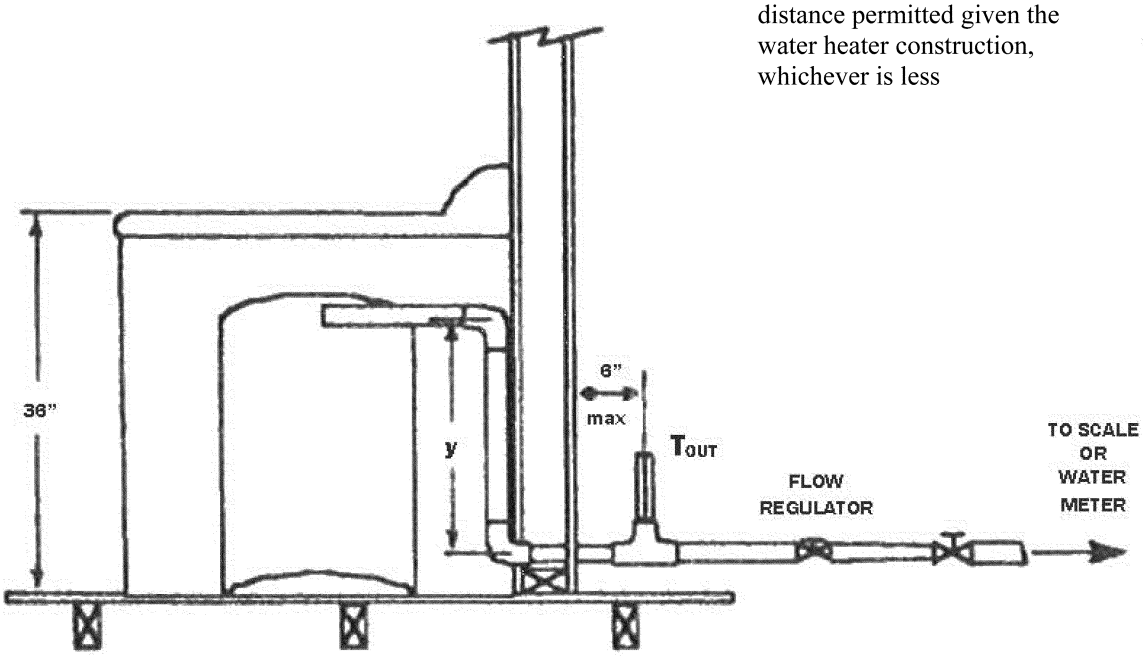

(b)

Figure 7.

■ 11. Section 430.32 is amended by revising paragraph (d) to read as follows:

§ 430.32 Energy and water conservation standards and their compliance dates.

* * * * *

(d) *Water heaters.* The energy factor of water heaters shall not be less than the following for products manufactured on or after the indicated dates.

Product class	Storage volume	Energy factor as of January 20, 2004	Energy factor as of April 16, 2015
Gas-fired Storage Water Heater.	≥20 gallons and ≤100 gallons.	0.67 − (0.0019 × Rated Storage Volume in gallons).	For tanks with a Rated Storage Volume at or below 55 gallons: EF = 0.675 − (0.0015 × Rated Storage Volume in gallons). For tanks with a Rated Storage Volume above 55 gallons: EF = 0.8012 − (0.00078 × Rated Storage Volume in gallons).

Product class	Storage volume	Energy factor as of January 20, 2004	Energy factor as of April 16, 2015
Oil-fired Storage Water Heater.	≤50 gallons	0.59 − (0.0019 × Rated Storage Volume in gallons).	EF = 0.68 − (0.0019 × Rated Storage Volume in gallons).
Electric Storage Water Heater.	≥20 gallons and ≤120 gallons.	0.97 − (0.00132 × Rated Storage Volume in gallons).	For tanks with a Rated Storage Volume at or below 55 gallons: EF = 0.960 − (0.0003 × Rated Storage Volume in gallons). For tanks with a Rated Storage Volume above 55 gallons: EF = 2.057 − (0.00113 × Rated Storage Volume in gallons).
Tabletop Water Heater	≥20 gallons and ≤120 gallons.	0.93 − (0.00132 × Rated Storage Volume in gallons).	EF = 0.93 − (0.00132 × Rated Storage Volume in gallons).
Instantaneous Gas-fired Water Heater.	<2 gallons	0.62 − (0.0019 × Rated Storage Volume in gallons).	EF = 0.82 − (0.0019 × Rated Storage Volume in gallons).
Instantaneous Electric Water Heater.	<2 gallons	0.93 − (0.00132 × Rated Storage Volume in gallons).	EF = 0.93 − (0.00132 × Rated Storage Volume in gallons).

Note: The Rated Storage Volume equals the water storage capacity of a water heater, in gallons, as certified by the manufacturer.

Exclusions: The energy conservation standards shown in this paragraph do not apply to the following types of water heaters: gas-fired, oil-fired, and electric water heaters at or above 2 gallons storage volume and below 20 gallons storage volume; gas-fired water heaters above 100 gallons storage volume; oil-fired water heaters above 50 gallons storage volume; electric water heaters above 120 gallons storage volume; gas-fired instantaneous water heaters at or below 50,000 Btu/h.

* * * * *

PART 431—ENERGY EFFICIENCY PROGRAM FOR CERTAIN COMMERCIAL AND INDUSTRIAL EQUIPMENT

■ 12. The authority citation for part 431 continues to read as follows:

Authority: 42 U.S.C. 6291–6317.

■ 13. Section 431.102 is amended by adding the definition of ''Residential-duty commercial water heater'' in alphabetical order to read as follows:

§ 431.102 Definitions concerning commercial water heaters, hot water supply boilers, and unfired hot water storage tanks.

* * * * *

Residential-duty commercial water heater means any gas-fired, electric, or oil storage or instantaneous commercial water heater that meets the following conditions:

(1) For models requiring electricity, uses single-phase external power supply;

(2) Is not designed to provide outlet hot water at temperatures greater than 180 °F; and

(3) Does not meet any of the following criteria:

Water heater type	Indicator of non-residential application
Gas-fired Storage	Rated input >105 kBtu/h; Rated storage volume >120 gallons.
Oil-fired Storage	Rated input >140 kBtu/h; Rated storage volume >120 gallons.
Electric Storage	Rated input >12 kW; Rated storage volume >120 gallons.
Heat Pump with Storage	Rated input >12 kW; Rated current >24 A at a rated voltage of not greater than 250 V; Rated storage volume >120 gallons.
Gas-fired Instantaneous	Rated input >200 kBtu/h; Rated storage volume >2 gallons.
Electric Instantaneous	Rated input >58.6 kW; Rated storage volume >2 gallons.
Oil-fired Instantaneous	Rated input >210 kBtu/h; Rated storage volume >2 gallons.

* * * * *

■ 14. In § 431.106, paragraph (b), Table 2, is revised to read as follows:

§ 431.106 Uniform test method for the measurement of energy efficiency of commercial water heaters and hot water supply boilers (other than commercial heat pump water heaters).

* * * * *

(b) * * *

TABLE 2 TO § 431.106—TEST PROCEDURES FOR COMMERCIAL WATER HEATERS AND HOT WATER SUPPLY BOILERS

[Other Than Commercial Heat Pump Water Heaters]

Equipment type	Energy efficiency descriptor	Test procedure	Test procedure required for compliance on and after	With these additional stipulations
Residential-Duty Commercial Water Heater.	Uniform Energy Factor.	10 CFR Part 430, Subpart B, Appendix E.	December 31, 2015***	None.

TABLE 2 TO § 431.106—TEST PROCEDURES FOR COMMERCIAL WATER HEATERS AND HOT WATER SUPPLY BOILERS—Continued

[Other Than Commercial Heat Pump Water Heaters]

Equipment type	Energy efficiency descriptor	Test procedure	Test procedure required for compliance on and after	With these additional stipulations
Gas-fired Storage and Instantaneous Water Heaters and Hot Water Supply Boilers*.	Thermal Efficiency	Use test set-up, equipment, and procedures in subsection labeled "Method of Test" of ANSI Z21.10.3–2011**, Exhibit G1.	May 13, 2013	A. For all products, the duration of the standby loss test shall be until whichever of the following occurs first after you begin to measure the fuel and/or electric consumption: (1) The first cut-out after 24 hours or (2) 48 hours, if the water heater is not in the heating mode at that time.
	Standby Loss	Use test set-up, equipment, and procedures in subsection labeled "Method of Test" of ANSI Z21.10.3–2011**, Exhibit G2.	May 13, 2013	B. For oil and gas products, the standby loss in Btu per hour must be calculated as follows: SL (Btu per hour) = S (% per hour) × 8.25 (Btu/gal-F) × Measured Volume (gal) × 70 (degrees F).
Oil-fired Storage and Instantaneous Water Heaters and Hot Water Supply Boilers*.	Thermal Efficiency Standby Loss	ANSI Z21.10.3–2011**, Exhibit G1. Use test set-up, equipment, and procedures in subsection labeled "Method of Test" of ANSI Z21.10.3–2011**, Exhibit G2.	May 13, 2013 May 13, 2013	C. For oil-fired products, apply the following in conducting the thermal efficiency and standby loss tests: (1) Venting Requirements—Connect a vertical length of flue pipe to the flue gas outlet of sufficient height so as to meet the minimum draft specified by the manufacturer. (2) Oil Supply—Adjust the burner rate so that: (a) The hourly Btu input rate lies within ±2 percent of the manufacturer's specified input rate, (b) the CO_2 reading shows the value specified by the manufacturer, (c) smoke in the flue does not exceed No. 1 smoke as measured by the procedure in ASTM–D2156–80 (reference for guidance only, see § 431.104), and (d) fuel pump pressure lies within ±10 percent of manufacturer's specifications.
Electric Storage and Instantaneous Water Heaters.	Standby Loss	Use test set-up, equipment, and procedures in subsection labeled "Method of Test" of ANSI Z21.10.3–2011**, Exhibit G2.	May 13, 2013	D. For electric products, apply the following in conducting the standby loss test: (1) Assume that the thermal efficiency (Et) of electric water heaters with immersed heating elements is 98 percent. (2) Maintain the electrical supply voltage to within ±5 percent of the center of the voltage range specified on the water heater nameplate. (3) If the set up includes multiple adjustable thermostats, set the highest one first to yield a maximum water temperature in the specified range as measured by the topmost tank thermocouple. Then set the lower thermostat(s) to yield a maximum mean tank temperature within the specified range. E. Install water-tube water heaters as shown in Figure 2, "Arrangement for Testing Water-tube Type Instantaneous and Circulating Water Heaters."

* As to hot water supply boilers with a capacity of less than 10 gallons, these test methods become mandatory on October 21, 2005. Prior to that time, you may use for these products either (1) these test methods if you rate the product for thermal efficiency, or (2) the test methods in subpart E if you rate the product for combustion efficiency as a commercial packaged boiler.

** Incorporated by reference, *see* § 431.105.

*** Because the statute permits use of a conversion factor until the later of December 31, 2015 or one year after publication of a conversion factor final rule, DOE may amend the mandatory compliance date for use of this amended test procedure, as necessary.

■ 15. Section 431.107 is added to read as follows:

§ 431.107 Uniform test method for the measurement of energy efficiency of commercial heat pump water heaters.

TABLE 1 TO § 431.107—TEST PROCEDURES FOR COMMERCIAL HEAT PUMP WATER HEATERS

Equipment type	Energy efficiency descriptor	Use test set-up, equipment, and procedures in subsection labeled "Method of Test" of	Test procedure required for compliance on and after
Residential-Duty Heat Pump Water Heater with Integrated Storage Tank.	Uniform Energy Factor	10 CFR Part 430, Subpart B, Appendix E.	December 31, 2015*.
All Other Types	[Reserved]	[Reserved]	[Reserved].

* Because the statute permits use of a conversion factor until the later of December 31, 2015 or one year after publication of a conversion factor final rule, DOE may amend the mandatory compliance date for use of this amended test procedure, as necessary.

[FR Doc. 2014–15656 Filed 7–10–14; 8:45 a.m.]

BILLING CODE 6450–01–P

FEDERAL REGISTER

Vol. 79 Friday,

No. 133 July 11, 2014

Part V

Department of Transportation

Pipeline and Hazardous Materials Safety Administration

49 CFR Parts 171, 172, 173, et al.

Hazardous Materials: Compatibility With the Regulations of the International Atomic Energy Agency (RRR); Final Rule

DEPARTMENT OF TRANSPORTATION

Pipeline and Hazardous Materials Safety Administration

49 CFR Parts 171, 172, 173, 174, 175, 176, 177 and 178

[Docket No. PHMSA–2009–0063 (HM–250)]

RIN 2137–AE38

Hazardous Materials: Compatibility With the Regulations of the International Atomic Energy Agency (RRR)

AGENCY: Pipeline and Hazardous Materials Safety Administration (PHMSA), Department of Transportation (DOT).

ACTION: Final rule.

SUMMARY: PHMSA, in coordination with the Nuclear Regulatory Commission (NRC), is amending requirements in the Hazardous Materials Regulations (HMR) governing the transportation of Class 7 (radioactive) materials based on recent changes contained in the International Atomic Energy Agency (IAEA) publication ''Regulations for the Safe Transport of Radioactive Material, 2009 Edition, IAEA Safety Standards Series No. TS–R–1.'' The purposes of this rulemaking are to harmonize requirements of the HMR with international standards for the transportation of Class 7 (radioactive) materials and update, clarify, correct, or provide relief from certain regulatory requirements applicable to the transportation of Class 7 (radioactive) materials.

DATES: *Effective date:* October 1, 2014.

Voluntary compliance date: PHMSA is authorizing voluntary compliance beginning July 11, 2014.

Delayed compliance date: Unless otherwise specified, compliance with the amendments adopted in this final rule is required beginning July 13, 2015.

Incorporation by reference date: The incorporation by reference of certain publications listed in this rule is approved by the Director of the Federal Register as of October 1, 2014.

FOR FURTHER INFORMATION CONTACT: Steven Webb, Standards and Rulemaking Division, telephone (202) 366–8553, or Michael Conroy, Engineering and Research Division, telephone (202) 366–4545, Pipeline and Hazardous Materials Safety Administration, U.S. Department of Transportation, 1200 New Jersey Avenue SE., 2nd Floor, Washington, DC, 20590–0001.

SUPPLEMENTARY INFORMATION:

I. Executive Summary
II. Background
III. Section-by-Section Review
IV. Regulatory Analyses and Notices
A. Statutory/Legal Authority for the Rulemaking
B. Executive Orders 12866 and 13563 and DOT Regulatory Policies and
C. Procedures
D. Executive Order 13132
E. Executive Order 13175
F. Regulatory Flexibility Act, Executive Order 13272, and DOT Policies and Procedures
G. Paperwork Reduction Act
H. Regulatory Identifier Number (RIN)
I. Unfunded Mandates Reform Act
J. Environmental Assessment
K. Privacy Act
L. Executive Order 13609 and International Trade Analysis

I. Executive Summary

In this final rule, PHMSA is amending the Hazardous Materials Regulations (HMR; 49 CFR parts 171–180) to incorporate changes adopted in the 2009 Edition of the IAEA Safety Standards publication titled ''Regulations for the Safe Transport of Radioactive Material, 2009 Edition, Safety Requirements, No. TS–R–1'' (hereinafter referred to as ''TS–R–1.'') [1] Additionally, PHMSA is making other changes to amend or clarify the requirements for transport of radioactive materials. These changes will help ensure that the classification, packaging requirements, and hazard communication requirements for shipments of radioactive materials provide the requisite level of public safety and are consistent with those employed throughout the world.

The harmonization of domestic and international standards for hazardous materials transportation enhances safety by creating a uniform framework for compliance. Harmonization also facilitates international trade by minimizing the costs and other burdens of complying with multiple or inconsistent safety requirements and avoiding hindrances to international shipments. Harmonization has become increasingly important as the volume of hazardous materials transported in international commerce grows.

Accordingly, federal law and policy strongly favor the harmonization of domestic and international standards for hazardous materials transportation. The Federal hazardous materials transportation law (Federal hazmat law; 49 U.S.C. 5101 *et seq.*) directs PHMSA to participate in relevant international standard-setting bodies and encourages DOT to align the HMR with international transport standards to the extent practicable, while recognizing that deviations may be appropriate, at times in the public interest (see 49 U.S.C. 5120). Under this authority, PHMSA actively participates in relevant international standard-setting bodies and promotes the adoption of standards consistent with the high safety standards set by the HMR. PHMSA's continued leadership in maintaining consistency with international regulations and enhances the hazardous materials safety program.

II. Background

Under their respective statutory authorities, DOT and the NRC jointly regulate the transportation of radioactive materials to, from, and within the United States. In accordance with their July 2, 1979, Memorandum of Understanding (a copy of which has been placed in the docket of this rulemaking) (44 FR 38690):

1. DOT regulates both shippers and carriers with respect to:

A. Packaging requirements;

B. Communication requirements for:

- Shipping paper contents,
- Package labeling and marking requirements, and
- Vehicle placarding requirements;

C. Training and emergency response requirements; and

D. Highway routing requirements.[2]

2. NRC requires its licensees to satisfy requirements to protect public health and safety and to assure the common defense and security, and:

A. Certifies Type B and fissile material package designs and approves package quality assurance programs for its licensees;

B. Provides technical support to PHMSA and works with PHMSA to ensure consistency with respect to the transportation of Class 7 (radioactive) materials; and

C. Conducts inspections of licensees and an enforcement program within its jurisdiction to assure compliance with its requirements.

Since 1968, PHMSA and the NRC (and their predecessor agencies) have, to the extent practicable, harmonized their

[1] A copy of the 2009 Edition of TS–R–1may be obtained from the U.S. distributors, Bernan, 15200 NBN Way, P.O. Box 191, Blue Ridge Summit, PA 17214, telephone 800–865–3457, email: *customercare@bernan.com*, or Renouf Publishing Company Ltd., 812 Proctor Ave., Ogdensburg, NY 13669, telephone: 1–888–551–7470, email: *orders@renoufbooks.com*. An electronic copy of TS–R–1 has been placed in the docket of this rulemaking and may also be found at the following IAEA Web site: *http://www-pub.iaea.org/MTCD/publications/PDF/Pub1384_web.pdf*.

[2] Within DOT, PHMSA is currently delegated the authority to carry out the functions assigned to DOT, except for highway routing requirements which are set forth in regulations of the Federal Motor Carrier Safety Administration. 49 CFR part 397, subpart D.

respective regulations with international regulations of the IAEA in:

• Safety Series No. 6, Regulations for the Safe Transport of Radioactive Material, as published in 1961 and revised in 1964 and 1967. Amendments to the HMR were adopted in a final rule published on October 4, 1968 in Docket HM–2 (33 FR 14918).

• The major updates of Safety Series No. 6 in 1973 and 1985. See the final rules published on March 10, 1983 in Docket HM–169 (48 FR 10218) and September 28, 1995, in Docket HM–169A (60 FR 50291).

• The 1996 major revision to the Safety Series No. 6, renamed ''Regulations for the Safe Transport of Radioactive Material, 1996 Edition, No. ST–1'' issued by the IAEA in 1996 and republished in 2000 to include minor editorial changes at which time the previous title was changed to ''Regulations for the Safe Transport of Radioactive Material, 1996 Edition, No. TS–R–1 (ST–1, Revised).'' See the final rule published on January 26, 2004, in Docket HM–230 (69 FR 3632).

Since then, the IAEA has published amendments and revised editions of TS–R–1 in 2003, 2005, and 2009.[3] PHMSA published a notice of proposed rulemaking (NPRM) on August 12, 2011 (76 FR 50332) that proposed to amend the HMR to maintain alignment with the 2009 Edition of TS–R–1, which incorporates all of the changes made to TS–R–1 in the 2003 amendments, the 2005 Edition, as well as other revisions. In this final rule, PHMSA is adopting the proposal with some changes. In addition to changes to harmonize with TS–R–1, PHMSA is enacting regulatory amendments identified through internal regulatory review processes to update, clarify, correct, or provide relief from certain regulatory requirements applicable to the transportation of Class 7 (radioactive) materials. Notable amendments to the HMR in this final rule include the following:

• Revise paragraph § 173.25(a)(4) to adopt the new TS–R–1 requirement for the marking of all overpacks of Class 7 (radioactive) packages with the word ''OVERPACK.''

• Revise §§ 172.203(d)(3) and 172.403(g) to clarify that the total activity indicated on the shipping paper and label must be the maximum activity during transportation.

• Revise Table 1 in § 172.504 to additionally require conveyances carrying unpackaged LSA–I material or SCO–I, all conveyances required by §§ 173.427, 173.441, and 173.457 to operate under exclusive use conditions, and all closed vehicles used in accordance with § 173.443(d) to be placarded. This change is a result of internal PHMSA review.

• Update definitions in § 173.403 for contamination, criticality safety index (CSI) for conveyances, fissile material, LSA, and radiation level. These changes are proposed primarily to align with definitions in the TS–R–1, and the change to the definition of ''criticality safety index'' is made to align with the NRC definition.

• Extend the retention period for Type A, Type IP–2, and Type IP–3 package documentation from one year to two years, to coincide with the minimum retention period currently required for shipping papers. PHMSA is also including more detailed language describing the kinds of information required to be included as part of the Type A package documentation. This change is being made based on internal PHMSA review of existing regulations, and is intended to ensure proper testing and preparation of these packages prior to being offered for transportation.

• Require that any conveyance, overpack, freight container, tank, or intermediate bulk container involved in an exclusive use shipment under § 173.427 or § 173.443(b) be surveyed with appropriate radiation detection instrumentation after each such shipment, and not be permitted to be used for another such exclusive use shipment until the removable surface contamination meets package contamination limits and the radiation dose rate at each accessible surface is no greater than 0.005 mSv/h (0.5 mrem/h). These changes are a result of internal PHMSA review.

• Update matter incorporated by reference to align with updated references in the TS–R–1 in § 171.7 and applicable sections.

• Clarify labeling requirements for radioactive shipments with subsidiary hazards in § 172.402. This change is a result of internal PHMSA review.

• Require that, when it is evident that a package of radioactive material or conveyance carrying unpackaged radioactive material is leaking or suspected to have leaked, access to the package or conveyance must be restricted and, as soon as possible, the extent of contamination and the resultant radiation level of the package or conveyance must be assessed in § 173.443. This will more closely align with the requirements in TS–R–1.

As in PHMSA's past rulemakings to incorporate updates of the IAEA regulations into the HMR, PHMSA has worked in close cooperation with the NRC in the development of this rulemaking. The NRC published a parallel NPRM on May 16, 2013 (78 FR 28988). PHMSA anticipates that NRC will publish a parallel final rule at a future date. Since the proposed rules will be published separately, there is a risk of differences in overlapping proposals that may affect the compatibility of the NRC and PHMSA regulations. PHMSA and the NRC have coordinated the development and publication schedules for the final rules. Several actions have been taken to mitigate possible problems that may arise from such asynchronous publication, including but not limited to: A delayed mandatory compliance date, enforcement guidance/discretion, and deferred consideration of a proposed change to § 173.453 regarding a fissile material exception for uranium enriched in uranium-235. PHMSA believes these actions, most specifically the delayed mandatory compliance date, will allow the NRC to complete its rulemaking cycle and to publish a final rule with an effective date in line with our effective date. This final rule addresses only the areas for which DOT has jurisdiction as defined in the MOU with NRC.

In response to the 2011 NPRM we received comments from the following persons, companies, associations and other entities:

- Alaska Inter-Tribal Council
- B&W Y–12 L.L.C. (B&W)
- Energy Solutions
- J. L. Shepherd & Associates (J. L. Shepherd)
- Lawrence Laude
- Nuclear Information and Resource Service (NIRS) & Citizens for Alternatives to Chemical Contamination (CACC) (NIRS & CACC)
- QSA Global Inc. (QSA Global)
- Regulatory Resources
- The Pennsylvania State University (Penn State)
- U.S. Army Corps of Engineers (USACE)
- United States Enrichment Corporation (USEC)
- Veolia ES Technical Solutions, L.L.C. (Veolia)

These comments are discussed in the section-by-section portion of this rule.[4] In considering each proposal in the NPRM and each comment, we reviewed and evaluated each amendment on its own merit, on the basis of its overall impact on transportation safety, and on the basis of the economic implications

[3] In 2012, the IAEA published the Specific Safety Requirements-6 (SSR–6) which may be addressed in a future rulemaking.

[4] Comments which were outside the scope of this rulemaking are not addressed in this final rule.

associated with its adoption into the HMR. Our goal is to harmonize the HMR with TS–R–1 without diminishing the level of safety currently provided by the HMR or imposing undue burdens on the regulated community.

III. Section-by-Section Review

Part 171

Section 171.7

In § 171.7, which contains a listing of all standards incorporated by reference into the HMR, PHMSA is replacing the 1996 edition of ''TS–R–1 (ST–1, Revised)'' with the 2009 edition of TS–R–1, with which we are harmonizing requirements in the HMR. We are also replacing the International Organization for Standardization standard ''ISO 2919–1980(E) Sealed radioactive sources—classification'' with ''ISO 2919–1999(E) Radiation Protection—Sealed radioactive sources—General requirements and classification,'' applicable to § 173.469(d).

We are removing from § 171.7 all entries that are only listed in §§ 178.356 and 178.358 covering the construction and use of 20PF and 21PF specification overpacks, respectively. These overpacks are no longer authorized in hazardous materials regulations. We are also deleting references to 2R vessels, and any materials incorporated by reference solely into § 178.360. The specifications for these packages are being removed from §§ 178.356, 178.358, and 178.360, respectively, as discussed below. J. L. Shepherd raised a concern about a possible effect on currently issued special permits that allow use of 2R vessels, but these changes would not affect existing special permits.

As a consequence of the removal of §§ 178.356, 178.358, and 178.360 the following references are being removed from the list of matter incorporated by reference in § 171.7:

- ANSI B16.5–77, Steel Pipe Flanges, Flanged Fittings, 1977 from § 171.7(d)(2),
- AWWA Standard C207–55, Steel Pipe Flanges, 1955 from § 171.7(i)(1),
- the reference heading for *American Water Works Association* from § 171.7(i); and
- all listings and the reference heading for Department of Energy under § 171.8(p)
  - USDOE, CAPE–1662, Revision 1, and Supplement 1, Civilian Application Program Engineering Drawings, April 6, 1988, from § 171.7(p)(1)
  - USDOE, Material and Equipment Specification No. SP–9, Rev. 1, and Supplement—Fire Resistant Phenolic Foam, March 28, 1968, from § 171.7(p)(2)
  - USDOE, KSS–471,—Proposal for Modifications to U.S. Department of Transportation Specification 21PF–1, Fire and Shock Resistant Phenolic Foam—Insulated Metal Overpack, November 30, 1986 from § 171.7(p)(3).

Part 172

Section 172.203

This section details additional description requirements that are required for certain shipments of hazardous materials. As proposed in our NPRM, we are revising § 172.203(d)(2) to specify that when a material is in ''special form'' the words ''special form'' must be included in the description, unless those words already appear in the proper shipping name. Lawrence Laude noted that this change would require that the offeror have the proper documentation to declare the material as special form. We agree, but note that an offeror of special form Class 7 material is already required to maintain documentation showing that the material meets the special form test requirements in § 173.469 or has an IAEA Certificate of Competent Authority showing this (see § 173.476). Consequently, if such documentation does not exist, the offeror may not classify the material as special form. An offeror who does not have the proper special form documentation, or does not wish to classify the material as special form, has the option to not declare it as special form.

In our NPRM we proposed that the activity included on shipping papers and labels required by § 172.203(d)(3) should include all parent radionuclides and daughter products, even those daughters that have half-lives shorter than 10 days and not greater than that of the parent. Several commenters raised concerns on our proposal. Lawrence Laude and J.L Shepherd commented that as proposed the NPRM changes would require listing multiple daughter products on the label with limited space, and create a potential conflict with the 95 percent requirement of § 173.433(g). (§ 173.433(g). requires that those radionuclides that constitute 95% of the total radioactive hazard, based on nuclide-specific activity/Type A ratios, to be listed on the shipping paper) While we did not propose any changes to the listing of the radionuclides, but only to the total activity, we agree this could introduce confusion between the list and the total. Lawrence Laude also noted that the proposed change would introduce an inconsistency with § 173.433(c)(2) for the calculation of A values for chains with short-lived daughters as that paragraph omits short-lived daughters. Lawrence Laude and J. L. Shepherd additionally noted that the A_1 and A_2 values for those radionuclides with short-lived daughters were derived taking the presence of the short-lived daughters into account; adding their activity would not be a fair comparison to the A_1 and A_2 values and would not be in harmony with TS-R-1. To avoid confusion with the nuclides to be listed, and to maintain consistency with the calculated A_1 and A_2 values, we are not adopting the proposed requirement to include daughter products when those daughters have half-lives less than 10 days and not greater than that of the parent.

As proposed in the NPRM, we are also more closely aligning with the wording in TS–R–1 by specifying that the activity should be the maximum activity of the radioactive contents during transport. Lawrence Laude agreed with adding ''maximum'' to require that the offeror take into account changes in the activity due to decay and/or buildup of daughters, and suggested it would be useful to include a short explanation of ''maximum'' in the regulations. We believe the phrase ''maximum activity of the radioactive contents contained in each package during transport'' is self-explanatory.

We are also amending § 172.203(d)(3) to permit the mass of each fissile nuclide for mixtures to be included when appropriate, that is, when there is a mixture present.

Additionally, in § 172.203(d)(4), we are revising the example to clarify that the word ''RADIOACTIVE'' is not required to be included in the description of the category of label.

Section 172.310

This section contains additional marking requirements for packages containing Class 7 (radioactive) material. In the NPRM we proposed to align the marking requirements in this section with the requirements in § 178.350 which references the marking requirements of § 178. 3. Lawrence Laude noted that our proposed change would have the unintended effect of requiring all Type A packages, including those with an AF certificate of compliance, to be marked with ''DOT 7A'' which is also required by § 178.350. The commenter also noted that an alternate approach is to simply change the current marking size requirements in § 172.310 to 12 mm (0.47 inches). We agree and are revising this paragraph accordingly.

Section 172.402

This section prescribes additional labeling requirements for shipments of hazardous materials. We are revising paragraph (d)(1) to clarify that for a package containing a Class 7 (radioactive) material that meets the definition of one or more additional hazard classes a subsidiary label is not required on the package if the non-radioactive material conforms to the small quantity exception in § 173.4, excepted quantities exception in § 173.4a, or de minimis exceptions in § 173.4b. Lawrence Laude suggested modification to clarify that applicable packaging and marking requirements for the subsidiary hazard need not be met. However, our intent is to except these packages only from labeling. Regulatory Resources stated that paragraph (d)(1) is redundant with the referenced paragraphs and should be deleted in its entirety. However we are keeping the paragraph to provide clarity that the subsidiary label is not needed in these situations.

Section 172.403

This section describes labeling requirements for shipments of Class 7 (radioactive) materials. We are correcting the reference in paragraph (d) from § 173.428(d) to § 173.428(e). We are revising paragraph (g)(2) to be consistent with the change included herein for § 172.203(d)(3) to more closely align with the wording in TS–R–1 by specifying that the activity should be the maximum activity of the radioactive contents during transport. In response to several comments, and as discussed under § 172.203(d)(3), we are not including the word ''total'' before ''maximum activity''. Further, we are amending the activity printing requirement on the RADIOACTIVE label to permit the mass of each fissile nuclide, as appropriate for mixtures, to be included.

Section 172.504

This section prescribes general placarding requirements. In the NPRM we proposed to require placards to be affixed to conveyances carrying fissile material packages, unpackaged low specific activity (LSA) material or surface contaminated object (SCO) in category I (i.e., LSA–I and SCO–I respectively), all conveyances required by §§ 173.427 and 173.441 to operate under exclusive use conditions, and all closed vehicles used in accordance with § 173.443(d). This would more closely align domestic placarding requirements with those of TS–R–1.

Regulatory Resources and Lawrence Laude stated their belief that packages bearing a fissile label do not warrant a radioactive placard, as adequate controls are provided by packaging and criticality safety index (CSI) labels. Lawrence Laude recommended that, if placarding fissile shipments is considered necessary, placarding should be limited to shipments required by § 173.457 to be operated under exclusive use. While adoption of placarding for all shipments of packages with fissile labels would be consistent with the requirements of TS–R–1, PHMSA recognizes this could be a burden for shipments of small quantities of fissile material. We are therefore adopting the suggested approach to require placarding only for shipments required by § 173.457 to be operated under exclusive use (that is, packages with CSI greater than 50).

Regulatory Resources stated that under the proposed requirement, a shipper cannot ''apply full markings and labels per 49 CFR 172 Subparts D and E on a package containing low specific activity (LSA) material or surface contaminated objects (SCO) and ship them as exclusive use unless the shipper placards the vehicle—regardless of the label applied.'' While this is true, when it is not required to be shipped as exclusive use, a shipper may apply full markings and labels per 49 CFR part 172 subparts D and E on a package containing LSA material or SCO and choose to not declare the shipment as exclusive use.

Regulatory Resources and Lawrence Laude noted that the placarding of all conveyances required by § 173.441 to operate under exclusive use would extend applicability to shipments where the aggregate transport index (TI) for packages with Radioactive Yellow II labels exceeds 50. Regulatory Resources stated that this would provide little benefit and would result in large training costs, though they did not provide a specific cost estimate. PHMSA believes there is a safety benefit to providing a clear indication to personnel that a package or packages have TI's larger than allowed on non-exclusive use shipments. PHMSA further believes that this benefit will exceed the costs. For further information on costs and benefits, please see the ''placarding'' and ''benefits of the rule'' sections of the RIA placed in the docket for this rulemaking.

Lawrence Laude noted that the use of the word ''conveyances'' in our proposed footnote, at least as defined in § 173.403, would require vessels and aircraft to be placarded, which is not consistent with § 172.504(a). While the definition in § 173.403 does not apply to § 172.504(a), we recognize that such an interpretation could be made. USEC added that based upon previous letters of interpretation changes to the existing text in sections to § 172.504(e) and § 173.427 to require only the conveyance to be placarded and not the conveyance and the package(s) would be beneficial. After analyzing the above comments on the NPRM, we are revising § 172.504(e) Table 1 Footnote 1 to read as set out in the regulatory text of this rule.

Section 172.505

This section describes when placarding for subsidiary risks is required. In paragraph (b), we proposed to remove the reference to ''low specific activity uranium hexafluoride'' to be consistent with changes to § 173.420(e). Lawrence Laude noted that the phrase ''non-fissile, fissile-excepted, or fissile uranium hexafluoride'' covers all the possible shipments requiring subsidiary placarding, so it should suffice to just refer to ''uranium hexafluoride.'' We agree, but choose to list the three different proper shipping names used for uranium hexafluoride for clarity.

Part 173

Section 173.4

This section provides requirements for shipments of small quantities by highway and rail. We proposed to revise paragraph (a)(1)(iv) to remove the reference to § 173.425, as the references in §§ 173.421 and 173.424 already cite the activity limits in § 173.425. Lawrence Laude noted that the reference to § 173.426 should also be deleted since, as noted in the preamble, it also does not specify a dose rate limit. The commenter also noted that the current and proposed § 173.4(b) already invoke §§ 173.421 and 173.424 which give activity limits for the package, making the inner receptacle activity limit references in § 173.4(a)(1)(iv) redundant. We agree and are removing paragraph (a)(1)(iv) from § 173.4.

In the NPRM we proposed to revise paragraph (b) to specify that small quantities of Class 7 (radioactive) materials must satisfy the requirements of §§ 173.421, 173.424, or 173.426 in their entirety. Lawrence Laude asked for justification, noting that as proposed, the change brings in all the requirements of § 173.422, including the requirements for notification, training, and for hazardous waste and hazardous substances, shipping papers; not just the marking change highlighted in our NPRM. We agree and we are revising paragraph (b) to cite only the previously

referenced paragraphs while adding the similar paragraphs of § 173.426. The commenter also noted that, as currently written, § 173.4 does not require shipping papers for small quantity packages containing hazardous waste or hazardous substances and suggested considering whether this needs to be addressed. General relief applicable to all hazard classes and divisions was not proposed in the NPRM, and is outside the scope of this rulemaking.

Lawrence Laude suggested that PHMSA should eliminate the marking requirements of §§ 173.4 and 173.4a for UN2910 and UN2911 excepted packages, viewing them as redundant. We did not propose these changes in the NPRM and such a change would be result in a substantive change not proposed and made available for public comment. Thus, such a change is considered outside the scope of this rulemaking. Commenters are welcome to petition for change by following the process detailed in §§ 106.95 and 106.100.

Section 173.25

This section provides requirements for packages utilizing overpacks. In the NPRM, we proposed to require the ''OVERPACK'' marking on all overpacks containing packages of Class 7 (radioactive) materials, unless package type markings representative of each Class 7 package contained therein are visible from the outside of the overpack.

J.L. Shepherd claimed that the historical meaning and understanding by users of Type B packages is that ''overpacks'' are heat and impact resistant structures, and thus the term should not be used for cardboard boxes, shrink wrap or wooden boxes. However, we did not propose any change to the definition of the term ''overpack'' already found in § 171.8 which does not preclude the use of cardboard boxes, shrink wrap, or wooden boxes as overpacks. The commenter also claimed that the IAEA has never addressed the use of ''overpacks'' related to type B shipments; however, the IAEA does define ''overpack'' in TS–R–1 which applies to all radioactive material packages and has marking requirements for overpacks similar to those proposed in our NPRM.

Lawrence Laude suggested deletion of the text ''(Type IP–1, –2, or –3)'' since industrial package by definition includes Type IP–1, –2, or –3. We agree and have made this change. He also suggested revisions to § 173.25(a)(6). However, we did not propose any changes to that paragraph in the NPRM and so those changes are outside the scope of this rulemaking. Clarifications were also requested on several other portions of this section that were not within the scope of this rulemaking. Lawrence Laude asked for clarification whether an overpack containing only excepted packages would need to be marked only with the UN number(s), consistent with Table 10 of TS–R–1. This is correct, but we see no needed changes to the proposed language. Regulatory Resources also requested we clarify the overpack marking requirements in § 173.448(g)(2), which references subpart D of part 172 and § 173.25(a), by removing the reference to subpart D. Although we agree that, because the part 172 marking requirements do not cover overpacks, this reference is unnecessary, we did not propose any changes to § 173.448 in the NPRM so this is outside the scope of this rulemaking. We may address this in a future rulemaking.

Section 173.401

This section outlines the scope of subpart I; subsection (b) specifies materials that are outside of that scope. We are modifying § 173.401(b)(4) to add the phrase ''which are either in their natural state, or which have only been processed for purposes other than for extraction of the radionuclides.'' We also added ''or determined in accordance with § 173.433'' to account for calculations for mixtures of radionuclides. We are also adding a new paragraph (b)(5) to clarify, based on internal PHMSA review of existing requirements, that non-radioactive solid objects with radioactive substances present on any surfaces in quantities not exceeding the limits cited in the definition of contamination in § 173.403 are not subject to the Class 7 (radioactive) material requirements of the HMR.

B & W requested that we consider PHMSA interpretation 06–0274 (issued May 6, 2008) and add that contaminated items below the consignment exemption limits are also not regulated. We believe this concept is already addressed in the regulations as referenced in the letter of interpretation and have not made this addition. The commenter also requested that we recognize ''free release'' limits that have been established by other federal agencies. We are not aware of any other specific codified federal limits and DOT does not have authority to set such limits.

Section 173.403

Section 173.403 contains definitions specific to Class 7 (radioactive) materials. We are revising the definitions of ''contamination,'' ''criticality safety index (CSI),'' ''fissile material,'' ''low specific activity (LSA) material,'' ''radiation level,'' and ''uranium.'' NIRS & CACC expressed ''serious concerns'' with the changes in the definitions but provided no specific comments.

We are changing the definition of ''contamination'' by deleting the word ''radioactive'' from the present definitions of ''Fixed radioactive contamination'' and ''Non-Fixed radioactive contamination.'' In addition, we are replacing the phrase ''contamination exists in two phases'' with ''there are two categories of contamination.'' Lawrence Laude noted that we were not consistent in our subsequent use of the term used for ''non-fixed contamination'' in the NPRM, using variations such as ''non-fixed (removable) radioactive surface contamination,'' ''removable (non-fixed) radioactive contamination,'' and ''removable radioactive surface contamination.'' We agree this could cause confusion, so we are standardizing by using ''non-fixed contamination'' as given in the definition and have made corresponding edits to §§ 173.421(c), 173.443, 174.715, 176.715, and 177.843.

We are revising the definition of ''criticality safety index (CSI)'' to include the sum of criticality safety indices of all fissile material packages contained within a conveyance. Lawrence Laude suggested that the language ''(rounded up to the next tenth)'' should be deleted from the definition of CSI as this is effectively addressed in the referenced sections of 10 CFR part 71 and would seem to eliminate a valid CSI of zero. The referenced NRC regulations contain the same words as our definition, except the last paragraph which says, ''Any CSI greater than zero must be rounded up to the first decimal place.'' PHMSA is not adopting the suggestion because we are consistent with the NRC definition in 10 CFR 71.4, and we reference 10 CFR 71.59 in our definition which includes the statement, ''Any CSI greater than zero must be rounded up to the first decimal place.'' We are revising the definition of ''fissile material'' to align with NRC's definition and to clarify that certain exceptions are provided in § 173.453. Lawrence Laude suggested that we adopt the IAEA definition, which makes a distinction between fissile nuclides and fissile material, rather than the NRC definition. We choose the NRC definition for domestic consistency and as we believe it more precisely defines what is intended by the regulation.

As proposed we are revising the definition of ''low specific activity

(LSA) material'' to more closely align with the definitions in TS–R–1 and in the NRC regulations.

We proposed slight modifications in the definition of ''package'' to replace ''Industrial package Type 1 (IP–1) . . . (IP–2) . . . (IP–3)'' with ''Industrial package Type 1 (Type IP–1) . . . (Type IP–2) . . . (Type IP–3).'' However, as Lawrence Laude and USEC noted, we introduced an error, repeating the word ''together'' under ''Industrial package.'' We are now correcting that error and changing only the references to package types.

We are revising the definition of ''radiation level'' to clarify the types of radiation that contribute to the radiation level, stating that it consists of the sum of the dose-equivalent rates from all types of ionizing radiation present including alpha, beta, gamma, and neutron radiation. Energy Solutions claimed this is inapplicable and overly burdensome when applied to container/conveyance release surveys. We do not use the term ''release survey'' in the regulations as DOT does not regulate the transfer of radioactive materials from control while ''radiation level'' limits are given in §§ 173.441 and 173.443. The commenter claims that alpha emitting radionuclides are not a contributor to external radiation dose equivalent and are already addressed in the removable surface contamination limits prescribed in the rule; he also claims that low-energy beta emissions should not be of concern and that it is not possible to accurately quantify beta dose at very low levels. We agree that for a large majority of radioactive packages, gamma or neutron radiation is the only significant contributor to dose at one meter from the surface of the package and although low energy beta emissions are typically more difficult to measure or might contribute little or even nothing to the radiation level, it is still possible and appropriate to measure their contribution, or the absence of any contribution, in order to ensure radiological safety.

However there are a few packages where neutrons must be considered (as noted in the current definition), and alpha and beta radiation should also be considered in meeting the regulatory requirements. The commenter proposed a new definition of ''Release Survey Effective Radiation Dose Equivalent;'' we do not believe such a term is needed.

We are revising the definition of ''uranium'' to include natural uranium that has not been chemically separated from accompanying constituents. Lawrence Laude said we should consider deleting ''(which may be chemically separated)'' as unnecessary. While this is true, we prefer to leave the words in for clarification.

B & W suggested we also change the § 173.403 definition of ''low toxicity alpha emitters'' to be consistent with the NRC and IAEA definitions. However, we did not propose such a change in the NPRM. We may consider changing the definition in a future rulemaking.

USEC suggested that we add a definition of ''overpack'' to § 173.403 specifically for radioactive material, separate from the definition of ''overpack'' in § 171.8. While the definition in § 171.8 is different than the definition in the TS–R–1 we do not see a need for change at this time. We did not propose such a change in the NPRM and believe that multiple definitions within the regulations are unnecessary.

Section 173.410

This section describes general design requirements for packages used to ship Class 7 (radioactive) materials. In paragraph (i)(3), we are revising the requirement for transporting liquid Class 7 (radioactive) material by air to specify that the package must be capable of withstanding, without leakage (i.e., without release of radioactive material), a pressure differential of not less than the ''maximum normal operating pressure'' (defined in § 173.403) plus 95 kPa (13.8. psi). The HMR currently require a package to be capable of withstanding a pressure differential of not less than 95 kPa. We are adding the maximum normal operating pressure (defined in § 173.403) to account for the contribution of internally generated gas pressure to the overall pressure differential.

USEC suggested we change ''13.8 psi'' to ''13.8 psia.'' We are not making this change, because ''psi'' is consistent with similar usage in § 173.27 and other sections of the HMR. Furthermore, the differential pressure may be either absolute or gage pressure, as long as both points are measured in the same units.

Section 173.411

Section 173.411 provides transportation requirements for industrial packagings. We are making several editorial revisions to improve consistency with the nomenclature used for package types, and to clarify the meaning of two authorized alternatives to Type IP–2 or IP–3 packages. We are replacing the word ''packaging'' with ''package'' in each place it appears in this section. We are also replacing the terms IP–1, IP–2, and IP–3 with Type IP–1, Type IP–2, and Type IP–3 to make the designations for industrial packages more consistent with the language used in the HMR for other Class 7 (radioactive) material package types, such as Type A and Type B(U).

We proposed modifying the requirement that tests for Type IP–2 and Type IP–3 packages must not result in a significant increase in the external surface radiation levels, with wording to indicate that the package tests must not result in more than a 20% increase in the maximum radiation level at any external surface of the package, consistent with the § 173.411 requirements for tank containers, tanks, freight containers, and metal intermediate bulk containers that are used as Type IP–2 or Type IP–3 packages. Penn State and Lawrence Laude stated that the 20% criterion could be difficult to meet for low-dose-rate packages. Regulatory Resources questioned the need for change as we had not previously adopted the IAEA approach. Regulatory Resources claimed there is already a quantified external package surface dose rate increase limit in § 173.441. However, that section provides the upper limits on allowable dose rates, whereas this criterion relates to the ability of the package design to maintain its shielding effectiveness in normal conditions of transport. Lawrence Laude stated that the proposed change would necessitate a review of all designs in domestic use and would entail large costs for little benefit. We agree that compliance with the 20% criterion could be burdensome for very low-dose-rate packages and that consideration needs to be given to use of previously allowable packages. Due to the issues raised we are not adopting the change to 20% at this time. However, we are not deleting the existing requirements in § 173.441 for tanks, freight containers, and intermediate bulk containers to meet the 20% limit and are revising the language in § 173.411 to be consistent with TS–R–1.

For consistency with the language in TS–R–1, in § 173.411(b)(4) we are replacing the phrases in paragraphs (b)(4), (b)(5), (b)(6) and (b)(7), ''designed to satisfy'' or ''designed to conform to'' certain requirements with the words, ''meet'' or ''designed to meet.'' In the NPRM we proposed to use the term ''satisfy,'' but after further consideration we believe it is clearer and simpler to instead replace the phrases in question with ''meets,'' which is also consistent with the language in TS–R–1.

USEC suggested that in both existing § 173.411(b)(4)(iii) and in proposed § 173.411(b)(5)(ii) we indicate ''38.4 psia,'' rather than ''37.1 psig'' as the U.S. standard or customary unit

equivalent to 265 kPa. We agree and are making these changes.

In § 173.411(b)(5) we are removing references to DOT Specification IM–101 and IM–102 steel portable tanks as Type IP–2 or IP–3 packages because they are no longer listed in Part 178 of the HMR and authorization for their use terminated on January 1, 2010 (although their use would still be permitted if it can be shown that they meet the requirements of § 173.411(b)(4)). We are revising § 173.411(b)(5) to contain the TS–R–1 requirements for cargo tanks and tank cars.

In paragraph (c), we are extending the retention period for Type IP–2 and Type IP–3 package documentation from one year to two years after the offeror's latest shipment, to correspond to the minimum period an offeror is required to retain copies of shipping papers. Regulatory Resources noted that the shipper of a package may not be the manufacturer of the package; in these instances, the commenter suggested that the documentation requirements should be placed on the manufacturer rather than the user/shipper. However, since Part 173 only applies to shippers, any requirement on manufacturers would need to be placed in Part 178. Furthermore, we are not introducing a new documentation requirement here, but only extending the required retention period. The commenter also suggested a delayed compliance timeframe to allow use of existing documentation requirements. We feel that this provision can be met by the delayed compliance date of this rule.

Section 173.412

This section prescribes additional design requirements for Type A packages. We are changing § 173.412(f) to require the containment system of a Type A package to be capable of retaining its contents under the reduction of ambient pressure to 60 kPa (8.7 psi) instead of the current 25 kPa (3.6 psi). Lawrence Laude expressed support for the change on the ground that it was more representative of the reduced pressures that could be experienced in ground transportation. J.L. Shepherd asked whether we would require the retesting of current Type A packages or provide a transition period. PHMSA believes that since packages currently have to withstand a reduction in ambient pressure from 100 kPa to 25 kPa, they should already be able to meet the new requirement (the old requirement was to withstand a reduction of 75 kPA (100 to 25 kpa), but now a reduction of only 40 kPa (100 kPa to 60 kPa) will be required). USEC suggested that we should use 8.7 psia instead of 60 kPa for clarity; we agree and have made this change.

We proposed revising § 173.412(j)(2) to specify that the maximum radiation level at the external surface of the package not increase by more than 20%. We received multiple comments on this proposal similar to those on the change proposed in § 173.411; as discussed above, due to the issues raised we are not adopting the change to 20% at this time.

Paragraph (k)(3) sets forth requirements for the retention of liquid contents in a Type A package. To provide further clarity, we are adopting the revised wording in TS–R–1, which states that a packaging designed for liquids must ''Have a containment system composed of primary inner and secondary outer containment components designed to enclose the liquid contents completely and ensure their retention within the secondary outer component in the event that the primary inner component leaks.''

Section 173.415

This section discusses authorized Type A packages. We proposed to extend the retention period for Type A package documentation from one year to two years after the offeror's latest shipment, to correspond to the minimum period for which an offeror is currently required to retain copies of shipping papers. We also proposed to include more detailed language describing the kinds of information expected to be included as part of the Type A package documentation.

While we received support from some commenters for the two-year retention period, Lawrence Laude requested that there be a delayed compliance period to accommodate shipments made more than one year prior to the effective date of the final rule and for which the documentation is no longer available. Several commenters (Veolia, J. L Shepherd, Lawrence Laude, and Penn State) expressed concern that current Type A package documentation would not meet the new requirements, and that any new requirements would invalidate the use of such packages until the documentation could be developed. Several commenters (Veolia, J. L Shepherd, Lawrence Laude, and Penn State) suggested a phase-in period be authorized for Type A packages currently in use until additional detailed documentation is available.

We agree that there may be a need for a transition period until the two-year retention period takes effect. We also agree that time may be needed to review and upgrade documentation. Therefore, we are not requiring compliance with the revised documentation requirements until January 1, 2017.

Veolia stated that the offeror of a Type A package should be able to use additional shielding or packing materials inside that package beyond that described in the package's documentation. We disagree. The current regulations require the packaging to be tested ''as normally prepared for transport'' which means shielding must be considered; additional shielding could change how the package performs and thus would need to be evaluated.

Penn State stated that providing engineering drawings of a package for a one-time-only shipment would increase the cost from negligible to significant with no added benefit and suggested that minimal documentation was required in such instances. However, the current regulations require even single use packages to be appropriately evaluated and documented. We agree that for some packages, engineering drawings may not be necessary, so we are not requiring engineering drawings in this final rule.

QSA Global and Penn State noted that in some instances, such as when a manufacturer ships a Type A package to a customer and the customer subsequently uses the package, following the manufacturer's instructions for the evaluated contents, the customer should be able to rely upon a certification from the manufacturer. Examples given include radiopharmaceuticals, sealed sources, instruments and gauges. In such instances, the shipper complies with the package assembly and closure instructions provided by the package manufacturer without modifying the design of the package system or contents except as authorized by the manufacture (e.g., various sources authorized for a given packaging system). It should be noted that under the existing requirements of § 173.415, the offeror must maintain the complete documentation.

QSA Global stated that full Type A package documentation files for reusable containers can be thousands of pages in length and contain information considered proprietary and confidential. The company currently maintains documentation on numerous packages used for Type A transport, and claims to provide sufficient information to ensure that users are aware of limitations associated with content, form and weight. The company also notes that there are hundreds of users of their Type A package designs, and recommended that shippers of Type A specification packages be required to

maintain package assembly instructions and obtain a Type A specification certification for the package from the packaging manufacturer.

Under the existing § 178.350, the term ''packaging manufacturer'' means the person certifying that the package meets all requirements of that section, which can often be the offeror, especially if the packaging or contents have been altered from that evaluated by another party. However, we agree that there are instances where the offeror is provided a packaging from another source for a particular set of contents and should not be considered to be the packaging manufacturer. Therefore, as an optional alternative to the current and revised requirement for offerors to maintain complete package documentation we are also including an option for offerors who receive a packaging from another party acting as the manufacturer, to rely on a manufacturer's certification. This certification would include a signed statement from the manufacturer affirming that the package meets all the requirements of § 178.350 for the radioactive contents presented for transport. This alternative creates no obligation on manufacturers to supply such a certification; it is merely an option available if an offeror is able to obtain the certification from the manufacturer. In such instances, the offeror will also be required to maintain a copy of the manufacturer's certification, and if requested by DOT, be able to obtain a copy of the complete documentation from the manufacturer. However, if the offeror has modified the packaging or contents from that evaluated and documented by the other party, the offeror must perform an evaluation of the changes and then maintain the complete documentation which must be provided to DOT on request. This will enable users to reuse packagings expressly made for certain contents and rely on documentation from another party acting as the manufacturer, but does not allow them to modify the packaging or contents without a documented evaluation of those changes.

Section 173.416

This section discusses authorized Type B packages. We are removing the present paragraph (c), which allowed the continued use of an existing Type B packaging constructed to DOT specification 6M, 20WC, or 21WC until October 1, 2008, and replacing it with a new paragraph (c) to authorize the domestic shipment of a package conducted under a special package authorization granted by the U.S. Nuclear Regulatory Commission in accordance with 10 CFR 71.41(d). That NRC provision is only applicable to limited, one-time shipments of large components that cannot be shipped inside a certified package, or for which designing a packaging would be impracticable due to their large size.

J. L. Shepherd requested that we maintain reference to the obsolete specification packages to allow continued use of those packages under special permits, but removal of this paragraph would have no impact on any such special permits. Lawrence Laude requested that we specify what proper shipping name should be used for packages authorized by this new paragraph. In the rulemaking establishing 10 CFR 71.41(d), the NRC stated that, for a package approved under that paragraph, the NRC will issue a Certificate of Compliance or other approval (i.e., special package authorization letter). In those cases where the NRC issues a certificate, the proper shipping name will be associated with the certificate (e.g., ''Radioactive material, Type B(M) package, *non-fissile or fissile-excepted*). In instances where the NRC issues a special package authorization letter, the proper shipping name will be ''Radioactive material, transported under special arrangement, *non-fissile or fissile-excepted*''.

Section 173.417

This section discusses authorized fissile materials packages. We are removing the present paragraph (c), which allows the continued use of an existing fissile material packaging constructed to DOT specification 6L, 6M, or 1A2 until October 1, 2008. We are also removing the references to 20 PF and 21PF overpacks in paragraphs (a)(3), (b)(3),and (b)(3)(ii) in Table 3 because those overpacks are no longer in service.

We are adding a new paragraph (c) to authorize the domestic shipment of a package conducted under a special package authorization granted by the U.S. Nuclear Regulatory Commission in accordance with 10 CFR 71.41(d). Lawrence Laude requested that we specify what proper shipping name should be used for packages authorized by this new paragraph. In those cases where the NRC issues a certificate, the proper shipping name will be associated with the certificate (e.g., ''Radioactive material, Type B(M) package, fissile). In instances where the NRC issues a special package authorization letter, the proper shipping name will be ''Radioactive material, transported under special arrangement, fissile.''

Section 173.420

Section 173.420 sets forth requirements for uranium hexafluoride (fissile, fissile excepted and non-fissile). We are removing and reserving paragraph (a)(2)(ii), which refers to specifications for DOT–106A multi-unit tank car tanks as these multi-unit tank car tanks are not used, nor planned to be used for transporting UF_6.

We had proposed to add the specification 30C package to the table in § 173.420(a)(2)(iii)(D). However, as USEC pointed out, the 30C cylinder is not a Section VIII ASME pressure vessel but is an ANSI N14.1 packaging. Therefore, we are not adding it to the table.

USEC suggested that in 173.420(a)(3)(i) we should change ''200 psi'' to ''200 psia'' and in 173.420(a)(6) we should change ''14.8 psig'' to ''14.7 psia''. For the first reference, the ANSI standard referenced in this section uses psig, not psia, thus we are not adopting the suggested change, but are changing it to ''200 psig'' instead. We do agree with the second suggestion as these packages are required to be shipped with an internal pressure less than atmosphere, and so we are adopting this change.

We proposed adding a paragraph (e) to require that, when there is more than one way to describe a UF_6 shipment, the proper shipping name and UN number for the uranium hexafluoride should take precedence (e.g., the uranium hexafluoride shipping description should take precedence over the shipping description for LSA material). Lawrence Laude noted that while the bullet-list summary of changes in the NPRM stated that this change would apply only to shipments of 0.1 kg or more of UF_6, our later discussion and draft text applied the change to all quantities. Lawrence Laude and USEC requested that this paragraph only apply to packages with 0.1 kg or more of UF_6, allowing small packages of uranium hexafluoride to be re-classed as Class 8 in accordance with § 173.423. We note that because we are harmonizing with the 2009 edition of the IAEA regulations, and this point has been raised regarding interpretation of the corresponding paragraph in TS–R–1, we will limit application of this paragraph to packages of 0.1 kg or more of UF_6. As the IAEA is working to clarify application of this requirement to packages of less than 0.1 kg of UF_6, we may consider changes to this requirement in a future rulemaking.

Section 173.421

This section outlines requirements for excepted packages for limited quantities of Class 7 (radioactive) materials. Presently, § 173.421(b) permits excepted packages of limited quantities of radioactive material that are a reportable quantity of hazardous substance or waste to be shipped without having to comply with § 172.203(d) or § 172.204(c)(4). We are extending this relief from these shipping paper requirements to all excepted packages that are a hazardous substance or waste by removing § 173.421(b) and adding the exclusion from §§ 172.203(d) and 172.204(c)(4) to § 173.422.

Section 173.422

Section 173.422 sets forth additional requirements for excepted packages containing Class 7 (radioactive) materials. PHMSA is revising the introductory text to specify that a small quantity of another hazard class transported by highway or rail (as defined in § 173.4) that would otherwise qualify for shipment as a Class 7 (radioactive) material in an excepted package must also satisfy the requirements of § 173.422. Lawrence Laude suggested that we also add excepted quantities as defined in § 173.4a. However such packages are currently covered by § 173.4a(a)(3).

As noted above, § 173.421(b) currently permits excepted packages of limited quantities of radioactive material that are a hazardous substance or hazardous waste to be shipped without having to comply with § 172.203(d) or § 172.204(c)(4). We are extending this relief from shipping paper requirements to include those excepted packages that contain a hazardous substance or hazardous waste by moving the exclusion from § 172.203(d) and § 172.204(c)(4) provisions to § 173.422(e). In the discussion in our NPRM, we stated that we were proposing to add an exclusion from § 172.202(a)(5) for such packages; however, in the draft of the regulatory text we referenced § 172.202(a)(6) instead. Lawrence Laude suggested that we should include both paragraphs; we agree and are including both.

We are also adding to § 173.422(a) a requirement that all excepted packages whose contents meet the definition of a hazardous substance, be marked with the letters ''RQ''. This will provide consistency with existing marking requirements for a package containing a hazardous substance. Lawrence Laude and Regulatory Resources noted that to be consistent with § 172.324, this should only apply to non-bulk excepted packages, we agree and have made that change.

Section 173.423

Section 173.423 prescribes requirements for multiple hazard limited quantity Class 7 materials. Lawrence Laude suggested several changes to § 173.423. However, as we did not propose any changes to that section in the NPRM, we are not adopting his proposals in this final rule.

Section 173.427

This section prescribes transport requirements for low specific activity (LSA) Class 7 (radioactive) material and surface contaminated objects (SCO). In the introductory paragraph of § 173.427(a), we are changing the phrase ''LSA material and SCO . . . must be packaged'' to ''LSA material and SCO must be transported.'' This should help clarify that paragraphs (c) and (d) apply to subcategories of LSA material or SCO, specifically unpackaged LSA material or SCO, and LSA or SCO which require packaging in accordance with NRC requirements in 10 CFR 71. NIRS and CACC opposed provisions in the proposed changes that remove packaging requirements for some SCO; however, this is a misunderstanding of these changes as no packaging changes were proposed. Lawrence Laude noted that for consistency, § 173.427(a)(2) should read ''LSA material and SCO'' instead of ''LSA and SCO material,'' and we are adopting that correction.

In § 173.427(a)(6)(v), we are removing the placarding exception for shipments of unconcentrated uranium or thorium ores. The increased communication requirement is intended to compensate for the fact that packaging requirements are minimal for these materials. We are also clarifying that all of the placarding requirements of subpart F of part 172 must be met by rewording this paragraph from referring to vehicle placarding, to requiring appropriate placarding of the shipment.

In § 173.427(a)(6)(vi), we proposed to require that when LSA material or SCO are shipped in accordance with that paragraph and contain a subsidiary hazard from another hazard class, § 172.402(d) labeling requirements for the subsidiary hazard would apply. Presently, § 173.427(a)(6)(vi) excepts such shipments from all marking and labeling requirements, other than for the stenciling or marking as ''RADIOACTIVE—LSA'' or ''RADIOACTIVE—SCO,'' as appropriate. Lawrence Laude noted that it is unclear how labels would be applied to unpackaged material, how many labels would be required, and whether labels or placards would be required for bulk packages with a volumetric capacity greater than 18 m^3 (640 ft^3). The commenter also claimed the proposed change has the potential for conflicting with the proposed change to § 172.402(d)(1) regarding not requiring subsidiary labels for Class 7 packages with subsidiary hazards meeting the requirements of §§ 173.4, 173.4a, and 173.4b. While this change cannot conflict with the new § 172.402(d), to which paragraph (a)(6)(vi) makes reference, the concerns on labeling of unpackaged material are valid. Therefore, we are amending this change to apply only to packaged material; for larger bulk packages, labels or placards could be used as required in § 172.400.

Lawrence Laude further claimed that portions of the proposed (and existing) § 173.427(a)(6) are either redundant or inconsistent with other requirements of subpart I and recommended that paragraphs (a)(6)(i) through (v) be deleted, that only paragraph (a)(6)(vi) be retained, and that paragraph (a)(6)(vii) be moved to a new paragraph (b)(6) or, alternately, a new paragraph (f). However, § 173.427(a)(6) does contain some unique requirements, and the changes suggested would be beyond the scope of what was proposed in the NPRM, so we are not adopting them.

We are revising paragraph (b)(1) to replace ''IP–1, IP–2, or IP–3'' with ''Type IP–1, Type IP–2, or Type IP–3,'' to coincide more closely with the IAEA nomenclature in TS–R–1.

In the NPRM we proposed to rearrange the wording in paragraph (b)(4), to indicate that for an exclusive use shipment of less than an A_2 quantity, the packaging must meet the requirements of § 173.24a or § 173.24b, depending on whether the packaging would be considered non-bulk or bulk according to the definition in § 171.8. Lawrence Laude noted that the reference to §§ 173.24a and 173.24b is redundant since the introductory text of § 173.410, which is also referenced, includes a requirement to meet subparts A and B of part 173, and §§ 173.24a and 173.24b are included in subpart B. We agree and are revising this paragraph to reference only § 173.410. Lawrence Laude also commented that we should address issues related to bulk Type A and Type B packages. However, we did not propose such changes in the NPRM.

In paragraph (b)(5), we are withdrawing the explicit authorization for certain DOT Specification tank cars and cargo tanks, and replacing it with the general authorization for use of portable tanks, cargo tanks and tank cars as provided in § 173.411. The previously authorized DOT

Specification tank cars and cargo tanks are seldom used and the § 173.411 requirements provided by this rulemaking offer a broader range of options.

In § 173.427(c)(3), we are changing the phrase ''where it is suspected that non-fixed contamination exists'' to ''where it is reasonable to suspect that non-fixed contamination exists'' to clarify that the shipper must have a justifiable reason if it decides that it is not necessary to take measures to ensure that contamination from SCO–I is not released into the conveyance or the environment.

We proposed adding a new paragraph (c)(4) to require that when unpackaged LSA–I material or SCO–I required to be transported as exclusive use is contained in receptacles or wrapping materials, the outer surfaces of the receptacles or wrapping materials must be marked ''RADIOACTIVE LSA–I'' or ''RADIOACTIVE SCO–I'' as appropriate. We proposed an additional new paragraph (c)(5) to require that all highway or rail conveyances carrying unpackaged SCO–I be placarded. USACE noted that paragraph (c)(4) would not provide hazard communication when a liner is shipped inside a transport vehicle (e.g. rail gondola) or an intermodal container and suggested that the outside of the transport vehicle and/or the receptacle or intermodal container would be the only place the marking should be required. We agree that the proposed markings could be obscured and we note that conveyance marking is already covered by § 173.427(a)(vi); hence we are not including this suggestion in the final rule. Lawrence Laude suggested that for consistency with other usage, the proposed § 173.427(c)(5) should refer to ''transport vehicle'' rather than ''highway or rail conveyance.'' However, conveyance includes freight containers, which sometimes need to be placarded. Lawrence Laude also asked for clarification that the placarding requirement of paragraph (c)(5) applies to non-exclusive use shipments of SCO–I made in accordance with paragraph (c)(2), whereas for other LSA material and SCO shipments, placards are only required for exclusive use shipments. Mr. Laude is correct, in this final rule, the placarding required in paragraph (c)(4) would only apply to exclusive use shipments, except for those SCO–I non-exclusive use shipments cited in paragraph (c)(2).

We are modifying Table 5 by adding a separate column for conveyances traveling by inland waterways, in which the authorized activity limits for combustible solids, liquids and gases of LSA–II and LSA–III and SCO would be 10% of those for other types of conveyances. NIRS & CACC asserted that this change could weaken existing regulations and opposed a change. However, these are newly added and more restrictive requirements so they do not ''weaken'' the regulations. In Table 6, we are replacing the terms IP–1, IP–2, and IP–3 with Type IP–1, Type IP–2, and Type IP–3 to be consistent with the similar changes made in § 173.411.

Section 173.433

Section 173.433 sets forth requirements for determining radionuclide values, and for listing radionuclides on shipping papers and labels. In the NPRM, we proposed to revise paragraphs (b), (c), (d)(3), and (h) Tables 7 and 8.

We are revising paragraph (b) to clarify the use of line 3 in Tables 7 and 8 when no relevant data are available. Currently, paragraph (b) allows use of Table 7 for values of A_1 and A_2 and Table 8 for exemption values when the individual radionuclides are not listed in §§ 173.435 or 173.436. Tables 7 and 8 also indicate values that may be used when ''No relevant data are available,'' but there is no reference in the text to when those entries may be used.

We are revising paragraph (c)(1) to conform to the current wording in TS–R–1 that ''it is permissible to use an A_2 value calculated using a dose coefficient for the appropriate lung absorption type.'' We are also adding language to paragraph (c) to clarify that this method of calculation only applies to the alternative specified in paragraph (b)(2), which requires approval by the Associate Administrator, or for international transportation, multilateral approval from the appropriate Competent Authorities.

We are revising paragraph (d)(3) to correct incorrect references to other paragraphs. Currently, the explanation of the symbols in paragraph (d)(3) refers to paragraph (d)(2) and itself. We are revising it to refer to paragraphs (d)(1) and (d)(2).

We are modifying the second category descriptions in both Tables 7 and 8, which presently read ''Only alpha emitting nuclides are known to be present.'' To conform as nearly as possible to the current wording in TS–R–1, we are replacing the current wording with ''Alpha emitting nuclides, but no beta, gamma, or neutron emitters, are known to be present'' (in Table 7), and ''Alpha emitting nuclides, but no neutron emitters, are known to be present'' (in Table 8).

In Table 7 we are also adding a footnote for the case when alpha emitters and beta or gamma emitters but no neutron emitters are known to be present. The reason for this footnote is that the IAEA default A_1 value for the case when alpha emitters are known to be present is larger than the value when only beta or gamma emitters are known to be present; the footnote entry clarifies that if both alpha and beta or gamma emitters are present, the lower default A_1 value should be used. The lesser A_1 default value that would be prescribed in this case would be the more logical and conservative choice. The third category presently reads ''No relevant data are available,'' we are replacing it with ''Neutron emitting nuclides are known to be present or no relevant data are available.'' The revised wording clarifies that if there are different default values for different types of radiation, the smaller, most conservative value for the types of radiation known to be present should be used. Regulatory Resources questioned how an A_1 value can be assigned when there are no relevant data concerning the nuclide(s); it is done by assigning a value that is equal to the lowest entry for nuclides listed in the table in § 173.435.

Section 173.435

This section contains the table of A_1 and A_2 values for the most commonly transported radionuclides. We are revising the table as follows:

- In the entry for Cf-252, in column 1, the reference to footnote (h) is removed, and in columns 3 and 4, the A_1 value is revised (this adopts the new TS–R–1 value for A_1, which is the same as previously allowed by domestic exception in footnote (h) and eliminates the domestic exception for A_2);
- A_1 and A_2 values and the intrinsic specific activity for Krypton-79 (Kr-79) are added to the table; the A values were calculated using the Q system, and added to TS–R–1 in its 2009 edition, and the specific activity calculated from the relation specific activity in Bq/g = 0.693 times Avogadro's number divided by the half-life in seconds times the atomic mass; and
- In the footnotes to the table, footnote (a) is revised to add a reference to TS–R–1 Table 2's list of daughter products, footnote (c) is revised to clarify that the comparison of ''output'' activity to the A-values is restricted to special form sources of Ir-192, and footnote (h) is removed for the Cf-252 entry, as discussed above, and reserved.

NIRS and CACC said they oppose weakening of definitions and increases in exemption levels. However, these are not changes to exemption levels but are corrections and clarifications.

Regulatory Resources suggested that the tables in §§ 173.435 and 173.436 be

combined into a single table. We prefer to keep the current format in order to maintain all the current content without reducing readability.

Section 173.436

This section contains exempt material activity concentrations and exempt consignment activity limits for radionuclides. To reflect corresponding changes in TS–R–1, we are revising the total consignment activity exemption for Tellurium-121m (Te-121m), from 1×10^5 Bq to 1×10^6 Bq, and we are adding an entry for Krypton-79 (Kr-79). We are also revising the list of parent nuclides and their progeny listed in secular equilibrium in footnote (b) to the table. The chains for parents Cerium-134 (Ce-134), Radon-220 (Rn-220), Thorium-226 (Th-226), and Uranium 240 (U-240) are removed. We are adding an entry for Silver-108m (Ag-108m).

Section 173.443

This section prescribes contamination control provisions. Paragraph (a) provides that the level of non-fixed contamination ''must be kept as low as resonabl[y] achievable'' and specifies alternative methods for determining the level of non-fixed contamination, which may not exceed certain permissible limits. The remaining paragraphs of § 173.443 address situations under which a higher level of non-fixed contamination is allowed;

- When a closed transport vehicle is used only for transportation by highway or rail of Class 7 (radioactive) material, the contamination level on the package may be as great as ten times the applicable limit specified in paragraph (a) if (1) a survey shows that the radiation dose rate at any point does not exceed specified values; (2) the outside of the vehicle is stenciled on both sides with the words ''For Radioactive Materials Use Only'' at least three inches high; and (3) the vehicle is kept closed excluding loading or unloading.
- Alternatively, if a package is transported as an ''exclusive use'' shipment by rail or highway, the level of non-fixed contamination on a package during the course of transportation may be as much as ten times the applicable limit specified in paragraph (a) so long as:
  - At the beginning of transport, the level of non-fixed contamination on the package does not exceed the applicable limit set forth in paragraph (a); and
  - the transport vehicle is surveyed and is not returned to service until the radiation does rate at each accessible surface does not exceed a specified value and there is no significant removable (non-fixed) surface contamination.

Paragraph (a)

The alternative methods for determining the level of non-fixed contamination are currently set forth in paragraphs (a)(1) and (2). In the NPRM, we proposed to redesignate these two paragraphs as paragraphs (a)(1)(i) and (a)(1)(ii), respectively, and provide in new paragraph (a)(2) that a ''conveyance used for non-exclusive use shipments is not required to be surveyed unless there is reason to suspect that it may exhibit contamination.'' We also proposed to apply the existing requirement that the level of non-fixed (removable) radioactive contamination on the external surfaces of each package be kept as low as reasonably achievable on the external and internal surfaces of an overpack, freight container, tank, intermediate bulk container (IBC), or conveyance—but not to the internal surfaces of a conveyance, freight container, tank or IBC dedicated to the transport of unpackaged radioactive material in accordance with § 173.427(c) and remaining under that specific exclusive use. This change ensures that any associated transportation equipment utilized for transportation does not exhibit excessive levels of non-fixed (removable) radioactive contamination and aligns the domestic contamination control requirements with international standards in TS–R–1.

In response to comments from Lawrence Laude and Regulatory Resources that the contamination levels should not apply to the interior surfaces of packages, we are clarifying that the contamination control requirements in paragraph (a) do not apply to the interior surfaces of (1) a tank, intermediate bulk container or other ''package,'' or (2) a conveyance or freight container dedicated to the transport of unpackaged LSA–1 material and SCO–1 in accordance with § 173.427(c) and remaining under that exclusive use.

In Table 9, which is referenced in the new § 173.443(a)(1)(i), we are changing the contamination limits in the column labeled dpm/cm² from 220 to 240 for contamination due to beta and gamma emitters and low toxicity alpha emitters, and from 22 to 24 for contamination due to all other alpha emitting nuclides, respectively. This will provide the correct conversions from the 4 and 0.4 Bq/cm² values. Lawrence Laude also raised additional concerns with our proposed changes to § 173.443(a):

- Mr. Laude inquired whether we should adopt any limit on fixed contamination, because we only addressed non-fixed contamination. We do not believe it is necessary or practical to impose fixed contamination limits on conveyances, overpacks, or freight containers being used for radioactive material transport, as radiation levels from the Class 7 material would make this practice difficult and unduly expensive, if not impossible to implement. It would also be unnecessary since the other transport controls for the declared hazard of the packaged or unpackaged radioactive material provides sufficient protection. Moreover, once these conveyances, overpacks, or freight containers are no longer used for transport of Class 7 material, they become subject to the HMR independently for possible radioactive material classification to address any possible fixed contamination hazard.
- Mr. Laude inquired whether the first sentence of the proposed paragraph (a)(1) should be limited to conveyances to be consistent with § 173.427(c), which prescribes requirements for shipping LSA–I and SCO–I in conveyances. However, a freight container can also be used in accordance with § 173.427(c) and should be subject to these requirements. Any requirement to measure non-fixed contamination on the internal surface of a tank or IBC is addressed by our change to the introductory language of paragraph (a).
- Finally, Mr. Laude inquired whether paragraph (a)(2) should apply to overpacks as well as conveyances. While this seems possible, we consider this change unnecessary because we are addressing the misconception that conveyances used for non-exclusive use transport were required to be routinely surveyed for contamination.

Paragraph (b)

Section 173.443(b) currently allows non-fixed radioactive contamination limits on a package to be up to ten times the limits in § 173.443(a) during exclusive use shipments by rail or highway, if the initial contamination is no greater than the § 173.443(a) limits. We proposed to apply this exception to the external and internal surfaces of conveyances, overpacks, freight containers, tanks, and IBCs, in addition to the external surfaces of each package. This ensures that any radioactive substances on the associated items utilized during transportation do not exceed the designated upper limits for non-fixed (removable) radioactive contamination of the package during transport.

In response to comments from Lawrence Laude and Regulatory

Resources, we are removing the reference to the ''internal surfaces'' of tanks and IBCs from the proposed § 173.443(b) because they are covered by the term ''package.'' However, we disagree that the reference to tanks and IBCs should be removed from the ''return to service'' provisions in § 173.443(c), which should be applicable to tanks and IBCs. And we do not find any inconsistency with the provisions in § 173.428 on the transport of empty Class 7 (radioactive) packagings.

Paragraph (c)

In paragraph (c), we proposed to replace the phrase ''returned to service until the radiation dose at each accessible surface'' is at a specified level with ''returned to Class 7 (radioactive) materials exclusive use transport service, and then only for a subsequent exclusive use shipment utilizing one of the above cited provisions, unless the radiation dose rate at each accessible surface'' is at that specified level. Under this proposal, with limited exceptions provided by §§ 173.443(a) and (d), a conveyance, freight container, overpack, tank, or intermediate bulk container used for exclusive use transport of radioactive materials under §§ 173.427(b)(4), 173.427(c), or 173.443(b) would need to be surveyed with appropriate radiation detection instruments. These conveyances, freight containers, overpacks, tanks, or intermediate bulk containers would have to exhibit a radiation dose rate no greater than 0.005 mSv per hour (0.5 mrem per hour) at any accessible surface, and non-fixed radioactive surface contamination no greater than the limits in § 173.443(a), in order to continue to be used for one of the following specified Class 7 (radioactive) materials exclusive use transport scenarios:

(1) The use of the packaging exception for less than an A_2 quantity authorized in § 173.427(b)(4);

(2) The use of the authorization in § 173.427(c) to ship unpackaged LSA–I and SCO–I; or

(3) The use of the authorization in § 173.443(b) to ship packages that may develop increased contamination during transport up to ten times the normal package limits, so long as the package meets the non-fixed contamination limits at the beginning of transport.

The procedure described in § 173.443(c) would not be applicable, and would in fact generally be prohibited, for unrestricted return to general service of the item or conveyance. The rationale for this proposed change in §§ 173.443(c), 174.715(a), 175.705(c), 176.715, and 177.843(a), is as follows:

(1) If this ''returned to service'' criterion were to be considered a criterion for unrestricted release following exclusive use transport of Class 7 (radioactive) materials, it would be providing a radioactive material unrestricted transfer (free release) limit, which DOT cannot authorize. DOT has authority only for the regulation of radioactive material while in transport. The clearance (unrestricted or free release) from regulatory control of radioactive materials for further use or disposal, or ownership, is subject to regulations of the Nuclear Regulatory Commission, NRC Agreement States or is effected pursuant to the control of the Department of Energy from their facilities (pursuant to the Atomic Energy Act of 1954, as Amended and the Energy Reorganization Act of 1974;

(2) Non-hazardous material, even foodstuffs, could be transported in contact with these items or conveyances, and an unacceptable health physics practice would result if these limits were construed to be a criterion for free release (i.e., for unrestricted radioactive material transfer);

(3) Adhering to the requirements for non-fixed contamination (no greater than the § 173.443(a) values) and radiation level (no greater than 0.005 mSv per hour, or 0.5 mrem per hour, at the surface of the vehicle) of § 173.443(c) would not provide sufficient protection for unrestricted transfer, considering that over time factors such as weathering could gradually convert any fixed contamination to non-fixed contamination; and

(4) Allowing the free release or unrestricted transfer of radioactive material at these levels would be incompatible with currently and generally accepted radiation protection practices.

USACE stated that the proposed rulemaking does not eliminate the confusion about ''contamination,'' especially for internal surfaces of conveyances, tanks, or intermediate bulk containers and whether they can be released from non-radioactive shipments. It also noted there are discrepancies concerning ''unrestricted release'' between PHMSA (in the HMR) and other Federal government agencies (in various guidance documents) and recommended that we consult with the NRC to develop ''unrestricted release'' criteria that would be applicable to both transport and transfer. While such a project may have merit, it would be beyond the scope of this rulemaking and could involve attempts to reconcile non-internationally accepted standards and/or U.S. standards that may be less restrictive or decades old. In this rulemaking, we are adopting the most recent international standards on contamination promulgated by the United Nations and the IAEA to be as consistent as possible with transport safety standards required by the rest of the countries in the world and facilitate international commerce.

Energy Solutions commented that the ''return to service'' provisions in revised paragraph (c) would create ambiguities, are contrary to the intent of the 1979 DOT and NRC memorandum of understanding, and are not compliant with Presidential Executive Orders 12866 and 13272, the Paperwork Reduction Act, the Unfunded Mandates Reform Act and ALARA mandates. The questions that Energy Solutions presented and our responses are as follows:

- Would a manifest be required when the package, conveyance, overpack, freight container, tank, or intermediate bulk container meets the return to service criteria, under the revised language? Since the exclusive use provision would continue to apply, at a minimum, the exclusive use requirements in § 173.403 would be applicable. The shipper must also classify and offer the material appropriate to the hazard, as applicable.
- What is the proper shipping name if the remaining material is exempt from Class 7 transport in accordance with § 173.436? If the remaining material can be demonstrated to be exempt from the regulations, then the HMR do not apply and therefore a proper shipping name is not necessary.
- How would the return to service requirements apply to various hypothetical situations, such as:
  - If a reportable quantity of radioactive material is being offered that is also exempt from the HMR in accordance with § 173.436. We do not know of a realistic scenario that could cause this situation to happen, but if the radioactive material can be demonstrated to be exempt from the HMR, then the HMR do not apply.
  - If the radioactive Class 7 hazard present is the subsidiary hazard of the material. We see no ambiguity; the return to service requirements criteria apply whether the radioactive material is the primary or subsidiary hazard.
  - If the conveyance returned to service under the proposed language remains under the control of the licensee or if it must be returned to a licensed facility? The material will need to be transferred in accordance with the

transfer license conditions of the shipper, which the DOT does not regulate.

○ If a closed transport vehicle meets the criteria in § 173.443(d) and is marked and placarded, would a manifest would be required and what proper shipping name should be used? The return to service requirements in paragraph (c) do not apply to a vehicle that meets the conditions in paragraph (d).

Overall, we disagree with Energy Solutions' position that the proposed rulemaking does not provide the clarification DOT seeks. We believe the proposed rulemaking clarifies possible longstanding misinterpretations on the distinction between transport and transfer of radioactive material and that the benefits realized for the public, transport workers and emergency responders far outweigh any possible disadvantages of the proposal.

We also disagree that this rulemaking is inconsistent with the 1979 Memorandum of Understanding or that it is not in ''the public interest.'' DOT and the NRC have advised and consulted with one another on this subject for a number of years and worked to clarify that return to service does not refer to, and cannot be interpreted to mean, unrestricted release or transfer. Class 7 accidental release statistics which the commenter referred to in the comments are not applicable in this case, because even if such accidents were to have occurred and no hazard communications were available, there would be no way of knowing such data should even be gathered because the human senses cannot detect radiation. Additionally, the possible detrimental scenarios need not be accident related, even weathering effects could possibly cause the spread of contamination, or as stated in the proposed rulemaking the contamination could be commingled with foodstuffs in subsequent transports, creating an unsatisfactory health physics practice.

Based on currently-accepted health physics theory, these revisions provide benefits to the public. Any data or documentation would be unrevealing, as there would be no deterministic health effects observed from low level contamination and any stochastic health effects would be equally difficult to observe empirically.

Similarly, we do not agree with Energy Solutions' arguments that this rulemaking fails to comply with the Executive Orders 12866 and 13271, the Unfunded Mandates Reform Act, and the Paperwork Reduction Act on the theory that the amendments proposed in the NPRM would result in a dramatic increase in operational costs of approximately 800–1,000% without any offsetting benefit or reduction in exposure to the public. Energy Solutions was the only entity to assert that there would be any increase in costs, much less the extreme increase it claimed. We consider that some relatively minor adaptation to new practices would enable return shipments of packages classified under a relatively lower Class 7 hazard category, such as an excepted package, and the regulatory benefits of modest transport requirements (primarily hazard communication provided to transport workers, emergency responders and members of the public) far outweigh the burden imposed.

Lastly, Energy Solutions recommended creating a new definition in § 173.403 for the term ''release survey effective radiation dose equivalent'' and additional rewording of § 173.443, as proposed in the NPRM, to provide ''relief from the unnecessary burdens and inaccuracies'' of the proposal. However, these recommended changes are beyond the scope of the proposals in this rulemaking.

Regulatory Resources expressed uncertainty over what the intention was for the proposed § 173.443(c) ''return to service'' criteria, but seemed to believe it applied primarily to packages. Our intention is unchanged, and we believe it is widely recognized that the basic contamination limits provided in § 173.443 will not typically lead to cross contamination of conveyances or any other items in contact with packaged radioactive material. For this reason, we do not require periodic radiation and contamination surveys related to non-exclusive use transport.

At the same time, we are clarifying the return to service criteria in this rulemaking, because regulatory relief in certain circumstances, such as provided by §§ 173.443(b), 173.427(b)(4), or 173.427(c), can possibly create cross contamination. For this reason, exclusive use provisions are needed, and return to service surveys are necessary, in order to mitigate and control the build-up of contamination levels in undesired locations when these provisions are utilized, while allowing flexibility and overall exposure reduction in these instances. As noted above, there seems to be some confusion that return to service standards can lead to a free release or unrestricted transfer situation, for which DOT does not have authority. Rather, exclusive use provisions may always be terminated when the items affected have been demonstrated to be no longer subject to the HMR or can be transported in accordance with provisions of the HMR that do not require contamination related exclusive use transport.

Paragraph (d)

In paragraph (d), we proposed to require placarding of closed transport vehicles used solely for the exclusive transportation by highway or rail of Class 7 (radioactive) material packages with contamination levels that do not exceed 10 times the package contamination limits prescribed in § 173.443(a). We proposed to add the qualifier ''exclusive use'' to ensure that the exclusive use requirements described under the definition of ''exclusive use'' in § 173.403 are satisfied for these shipments. In this paragraph, we are deleting the word ''packages'' to allow this paragraph to apply to unpackaged radioactive material, which will provide consistency with similar requirements found in paragraphs §§ 174.715(b) and 177.843(b).

Lawrence Laude suggested that § 173.443(d)(2) be changed to allow the words to be a ''marked'' rather than ''stenciled'' to allow flexibility. PHMSA accepts that there are several ways to appropriately mark the required information, and has amended the regulatory text to allow marking, with stenciling as an example.

Paragraph (e)

In paragraph (e), we proposed to add required actions for leaking or suspect Class 7 (radioactive) packages or unpackaged material, including immediate actions and assessments, protective requirements, recovery techniques, and prerequisites for continued transport. In response to the suggestions from Regulatory Resources, we are adding the words ''as applicable'' and changing the second sentence in the paragraph to read ''The scope of the assessment must include, as applicable, the package, the conveyance, the adjacent loading and unloading areas, and, if necessary, all other material which has been carried in the conveyance.''

Section 173.453

This section prescribes exceptions for fissile materials. In the NPRM we proposed inserting a phrase into § 173.453(d) that would allow a fissile material exception for uranium enriched in uranium-235 to a maximum of 1 percent by weight under the conditions stated there only if the material in question is essentially homogeneous. After consulting with the NRC on its upcoming rulemaking, we have decided to not make the proposed change at this

time. If the NRC changes the defining criteria for this radionuclide we will update in a future rulemaking.

Regulatory Resources suggested a reorganization of § 173.453(c) for clarity. However, this was not included in our NPRM and we find the existing language to be clear, so we are not adopting the suggested changes.

Section 173.465

This section sets out requirements for Type A packaging tests. In paragraph (a), we are adding a specific reference to the standard in § 173.412(j) for when a test for a Type A package is deemed to be successful. In § 173.465(d)(i), we are adopting the revised TS–R–1 language to clarify that the stacking test weight must be calculated using five times the maximum weight of the loaded package. USEC suggested that we reword this requirement to ''maximum allowable package weight,'' but we choose to keep the wording shown in our NPRM for consistency with TS–R–1.

Section 173.466

This section describes additional tests for Type A packagings designed for liquids and gases. In paragraph (a), we are adding a specific reference to the standard in § 173.412(k) for when a test for a Type A package designed for liquids or gases is deemed to be successful.

Section 173.469

This section describes tests for special form Class 7 (radioactive) materials. In paragraph (b)(2)(ii), we are replacing the word ''edges'' with the word ''edge'' since this refers to the edge of a flat circular surface.

In paragraph (b)(2)(iii), we are revising the units of measure and the thickness requirement for the lead sheet used for the percussion test from ''2.5 cm (1 inch) or greater'' to ''not more than 25 mm (1 inch)'' in thickness, which is consistent with the requirement in TS–R–1. USEC asked that there be a transition period for previously tested materials that might not meet the revised criteria. PHMSA expects minimal impact because alternative testing in accordance with ISO 2919 or IAEA requirements has been typically used to demonstrate compliance. If any special form certificate renewals are impacted, they will be evaluated on a case-by-case basis to allow for transition if necessary.

In paragraph (d)(1) we are adding an alternative to allow the use of the ISO 2919 Class 5 impact test as an alternative to the impact and percussion test if the mass of the special form material is less than 500 g, as this alternative was added to TS–R–1. Updated references to the 1999 edition of ISO 2919 are being added to paragraphs (d)(1) and (d)(2).

We are adding a provision in new paragraph (e) in § 173.469 to allow sources subjected to the ISO 2919 heat test before the effective date of this final rule to not have to be retested to the newer revision of ISO 2919 (i.e. ISO 2919–1999(E)) which is being incorporated by reference in this rulemaking.

Section 173.473

This section prescribes requirements for foreign made packages. We are revising § 173.473(a)(1) to update the reference to the 2009 edition of the IAEA standards for transportation of radioactive materials, TS–R–1.

Section 173.476

This section details the requirements for approval of special form materials. We are revising paragraph (a) to extend the retention period for special form documentation from one year to two years after the offeror's latest shipment, to coincide with the minimum retention period for shipping papers. In the NPRM we proposed revising paragraph (d) to replace the reference to an obsolete proper shipping name with a reference to the current proper shipping names. This change was completed under a different rulemaking, Docket No. PHMSA–2013–0158 (HM–244F) 78 FR 60748 (Oct. 2, 2013). Further amendment to this paragraph is not needed in this final rule.

Lawrence Laude requested that paragraph (d) be expanded to include packages of special form material where the activity is less than A_2 to account for special form sources with expired or unavailable documentation which could be shipped as ''Radioactive Material, Type A Package.'' As discussed under our changes to § 172.203(d)(2), if such documentation does not exist, the shipper should not classify the material as special form and then this paragraph would not be applicable.

Section 173.477

This section details the requirements for approval of packagings containing greater than 0.1 kg of non-fissile or fissile-excepted uranium hexafluoride. In paragraph (a), we are extending the retention period for uranium hexafluoride packaging documentation from one year to two years after the offeror's latest shipment, to coincide with the minimum retention period for shipping papers.

Section 174.700

We are removing and reserving paragraph (e), which provided special handling requirements for fissile material, controlled shipments, since that term was removed from the regulations in our January 26, 2004 rulemaking (69 FR 3632 (HM–230)). Lawrence Laude stated that paragraph (e) should not be deleted, but should be reworded to be consistent with, for example, § 177.842(f) as ''fissile material controlled shipments'' were replaced with exclusive use shipments with a total CSI not to exceed 100. The commenter also stated that if this change is intended to rely on the references to §§ 173.457 and 173.459 in § 174.700(d), the requirements in part 177 should be similar and the different modal requirements should be consistent. However, paragraph (d) does provide references to §§ 173.457 and 173.459, as does § 177.842(f). The commenter also proposed deletion of § 173.459, but as we did not include any proposed changes to that section in the NPRM we are not adopting that suggestion.

Section 174.715

This section prescribes requirements for cleanliness of rail transport vehicles after use. We are revising § 174.715(a) to make this section consistent with the changes being made in § 173.443(c) to clarify the phrase ''returned to service.''

Section 175.702

This section provides separation distance requirements for packages containing Class 7 (radioactive) materials in cargo aircraft. In the NPRM we proposed changes to § 175.702(b) and (c) to include references to the CSI limits in § 175.700(b). Lawrence Laude noted that this paragraph is inconsistent with TS–R–1, which does not have limits on groups of packages beyond the limits for the entire aircraft. We agree that this paragraph is more stringent than TS–R–1, but not otherwise contradictory. In other words, compliance with the existing requirements of § 175.702(b) satisfies the (lesser) requirements in TS–R–1. As such, we are adopting the changes to § 175.702 as proposed in the NPRM.

Section 175.705

This section describes requirements concerning radioactive contamination of aircraft. In paragraph (c) we are clarifying that the totality of any radioactive substances remaining after clean-up of an aircraft where radioactive material has been released must not meet the definition of radioactive material (as defined in § 173.403) before

returning the aircraft to service. Lawrence Laude noted the proposed change to § 175.705 appears to be more stringent than the requirement for other modes as well as the non-fixed contamination limits in § 173.443(a). The commenter is correct in noting the contamination related requirements for aircraft are different from the other modes. The differences are a result of the evolution of the requirements, dating back to aircraft contamination events that occurred in the 1960s. However, it should be noted that the contamination limits in § 173.443 apply to packages, conveyances and other related items that are offered for Class 7 transport. It should also be noted that § 173.443(a) does not just require compliance with the Table 9 limits, but also that contamination be kept as low as reasonably achievable.

Section 176.715

This section describes requirements concerning radioactive contamination of vessels. We are revising § 176.715 to make this section consistent with the changes being made in § 173.443(c) to clarify when holds, compartments, or deck areas used for the transportation of LSA material or SCO under exclusive use conditions may be ''used again'' (i.e. ''returned to service''). Lawrence Laude stated these changes to § 176.715 would add increased ambiguity rather than eliminating it because it does not specifically address contamination limits for holds, compartments, and deck areas being returned to general service. The commenter also stated it was questionable whether a deck area would be used for unpackaged radioactive material. We believe the definition of contamination in conjunction with the new scope exclusion provided in § 173.401(b)(5) provides clear guidance as to when the HMR is applicable in these transport cases cited by the commenter, as well as all other transport scenarios. However, any further transfer or ownership criteria of radioactive material will be regulated separately by the applicable licensing authority. Use of a deck area for unpackaged transport is conceivable in accordance with § 173.427(c), so it is not appropriate to revise this wording.

Section 177.843

This section describes requirements concerning radioactive contamination of vehicles. In § 177.843(a), PHMSA is adding a reference to § 173.443(b). This is part of a larger proposed change developed from PHMSA internal review, that is intended to make this section consistent with the changes proposed in § 173.443(c). In this final rule, PHMSA is modifying § 173.443(c), to eliminate the ambiguity and confusion concerning the phrase ''returned to service,'' for conveyances, overpacks, freight containers, tanks, and intermediate bulk containers that may have had radioactive substances deposited on them during certain Class 7 (radioactive) exclusive use transport scenarios.

Lawrence Laude suggested that § 177.843 fails to address the contamination limits to be applied to motor vehicles being returned to general service. We believe the definition of contamination in conjunction with the new scope of exclusions provided in § 173.401(b)(5) will provide clear guidance as to when the HMR is applicable in these transport cases cited by the commenter, as well as all other possible transport scenarios. However, any further transfer or ownership criteria of radioactive material will be regulated separately by the applicable licensing agency.

Lawrence Laude further stated the current and proposed § 177.843(a) requires that motor vehicles used for an exclusive use shipment of LSA material or SCO per § 173.427(b)(4) must be surveyed for contamination after each use. The commenter also noted § 173.427(b)(4) allows LSA material and SCO to be shipped in packages meeting the performance based criteria of § 173.410 and these are the same criteria that Type IP–1 packages have to meet, yet exclusive use shipments of LSA material and SCO in Type IP–1 packages do not require vehicle surveys after use. For consistency, the commenter recommended that the requirement for surveying vehicles used for § 173.427(b)(4) shipments be deleted from § 177.843(a) and the corresponding sections of Parts 174 and 176. We believe the commenter failed to note the longstanding domestic exception in § 173.427(b)(4) permits liquid LSA–I, LSA–II, LSA–III and SCO–II to be transported in a Type IP–1 package, under certain conditions, rather than a Type IP–2 or Type IP–3 as required by Table 6 in § 173.427. This practice has been demonstrated to provide needed flexibility and an effective level of safety for several decades. A shipper is not required to package in accordance with § 173.427(b)(4) and may elect to ship solid LSA–I and SCO–I in a Type IP–1 non-exclusive use in accordance with § 173.427(b)(1) and Table 6 in § 173.427. A shipper may also elect to package in accordance with §§ 173.427(b)(2), (3), or (5), which would not necessarily require the survey required by § 177.843(a).

Section 178.350

This section provides specifications for specification 7A packages. We are revising paragraph (c) to clarify that a DOT Specification 7A Type A package must satisfy the requirements of § 178.2 as well as the marking requirements of § 178.3.

Sections 178.356, 176.356–1 through178.356–5

These sections provide specifications for specification 20PF phenolic-foam insulated, metal overpacks. USEC noted that this section, along with the sections cited below on the 21PF overpacks, should also be deleted in its entirety, as the 20PF series overpacks are old specification packages that also are no longer in service. We agree, and are removing and reserving these sections.

Sections 178.358, 178.358–1 through 178.358–6

These sections provide specifications for specification 21PF fire and shock resistant, phenolic-foam insulated, metal overpacks. We are removing §§ 178.358 and 178.358–1 through 178.358–6 because 21PF overpacks for uranium hexafluoride cylinders are no longer authorized.

Sections 178.360, 178.360–1 through 178.360–4

These sections provide specifications for specification 2R: Inside containment vessels. We are removing §§ 178.360, and 178.360–1 through 178.360–4 pertaining to the DOT Specification 2R inside containment vessel since specification 2R was only required, under certain conditions, to be used as the inner container for the DOT Specification 20WC, 21WC, 6L, and 6M packages, and authorization for use of these latter packages was terminated on October 1, 2008. J. L. Shepherd was concerned that removal of the 2R specification would impact Special Permits that include their usage; however, this change would not directly affect such Special Permits.

IV. Regulatory Analyses and Notices

A. Statutory/Legal Authority for This Rulemaking

This final rule is published under authority of 49 U.S.C. 5103 and 5120 which, respectively:

1. Authorize the Secretary of Transportation to (a) designate radioactive and other materials ''as hazardous when the Secretary determines that transporting the material in commerce in a particular amount and form may pose an unreasonable risk to health and safety or

property,'' and (b) ''prescribe regulations for the safe transportation, including security, of hazardous material in intrastate, interstate, and foreign commerce.''

2. Direct the Secretary to (a) ''participate in international forums that establish or recommend mandatory standards and requirements for transporting hazardous material in international commerce,'' and (b) ''consult with interested authorities to ensure that, to the extent practicable, regulations the Secretary prescribes . . . are consistent with standards and requirements related to transporting hazardous material that international authorities adopt,'' except that the Secretary need not adopt an international standard or requirement which ''the Secretary decides. . .is unnecessary or unsafe,'' and the Secretary may prescribe a more stringent safety standard or requirement which the Secretary decides ''is necessary in the public interest.'' This final rule amends requirements in the HMR governing the transportation of Class 7 (radioactive) materials in commerce to maintain alignment with international standards by adopting recent updates in TS–R–1, including changes to packaging requirements, definitions, and activity limits.

Harmonization serves to facilitate international commerce; at the same time, harmonization promotes the safety of people, property, and the environment by reducing the potential for confusion and misunderstanding that could result if shippers and transporters were required to comply with two or more conflicting sets of regulatory requirements. While the intent of this rulemaking is to align the HMR with international standards, we review and consider each amendment on its own merit based on its overall impact on transportation safety and the economic implications associated with its adoption into the HMR. Our goal is to harmonize without sacrificing the current HMR level of safety and without imposing undue burdens on the regulated community. Thus, as explained in the corresponding sections above, we are not harmonizing with certain specific provisions of the TS–R–1. Moreover, we are maintaining a number of current exceptions for domestic transportation that should minimize the compliance burden on the regulated community.

In developing this final rule PHMSA consulted with the NRC and the U.S. Coast Guard.

B. Executive Orders 12866 and 13563 and DOT Regulatory Policies and Procedures

This rulemaking is not considered a significant regulatory action under Executive Order (E.O.) 12866 (''Regulatory Planning and Review''), as supplemented and reaffirmed by E.O. 13563 (''Improving Regulation and Regulatory Review''), stressing that, to the extent permitted by law, an agency rulemaking action must be based on benefits that justify its costs, impose the least burden, consider cumulative burdens, maximize benefits, use performance objectives, and assess available alternatives, and the Regulatory Policies and Procedures of the Department of Transportation (44 FR 11034).

During the rulemaking process, PHMSA considered three alternatives to harmonize domestic and international radioactive materials transportation requirements:

Alternative 1: Do nothing. The United States actively participates in the development of uniform international standards for transporting hazardous materials. Because all major countries and international carrier organizations have or will adopt the changes proposed in this rulemaking, a do-nothing approach would fail to adopt international standards which enhance safety in the transportation of radioactive materials and would result in complications in the movement of these materials. Future inconsistencies with international transport standards may result in foreign authorities refusing to accept hazardous material shipments prepared in accordance with the HMR. To successfully participate in international markets, U.S. companies would be required to conform to dual regulations. Inconsistent domestic and international regulations also have an adverse safety impact by making it more difficult for shippers and carriers to understand and comply with all applicable requirements. Unnecessary transportation delays may also expose international shipments to additional safety and security vulnerabilities. For these reasons, PHMSA did not adopt Alternative 1.

Alternative 2: Adopt the international standards in their entirety. Under this alternative, all revisions to the IAEA regulations would be incorporated into the HMR. In some instances PHMSA believes more stringent regulations are necessary to enhance transportation safety, and in others, less stringent regulations are necessary to reduce economic burden. Because of certain safety and economic concerns PHMSA elected not to propose adoption into the HMR of some amendments incorporated into the IAEA regulations. In addition, PHMSA and the NRC have identified changes that are only applicable domestically that would increase safety, reduce costs, and improve compliance. For these reasons, PHMSA did not adopt Alternative 2.

Alternative 3: Adopt IAEA regulations with additional changes to the HMR that promise to enhance safety and decrease regulatory compliance obstacles. Under this alternative, PHMSA is harmonizing the HMR with the IAEA regulations and the NRC proposed amendments to an extent consistent with U.S. safety and economic goals. As indicated above, PHMSA is not adopting provisions that, in PHMSA's view, do not provide an adequate level of safety. Further, PHMSA is providing for exceptions and extended compliance periods to minimize the potential economic impact of any revisions on the regulated community. PHMSA provides detailed justification for each instance in the final rule where the proposed change differs from the revised IAEA regulations. Alternative 3 is the only alternative that addresses, in all respects, the purpose of this regulatory action, which is to facilitate the safe and efficient transportation of hazardous materials in international commerce. For these reasons, Alternative 3 is PHMSA's chosen alternative. A complete copy of the economic impact assessment for this final rule is available in the docket for this rulemaking action PHMSA–2009–0063 (HM–250).

C. Executive Order 13132

This final rule has been analyzed in accordance with the principles and criteria contained in Executive Order 13132 (''Federalism''). This final rule preempts State, local, and Indian tribe requirements but does not impose any regulation that has substantial direct effects on the States, the relationship between the national government and the States, or the distribution of power and responsibilities among the various levels of government. Therefore, the consultation and funding requirements of Executive Order 13132 do not apply.

The Federal hazardous material transportation law, 49 U.S.C. 5101–5128, contains an express preemption provision (49 U.S.C. 5125(b)) that preempts State, local, and Indian tribe requirements on certain subjects, as follows:

(1) The designation, description, and classification of hazardous material;

(2) The packing, repacking, handling, labeling, marking, and placarding of hazardous material;

(3) The preparation, execution, and use of shipping documents related to hazardous material and requirements related to the number, contents, and placement of those documents;

(4) The written notification, recording, and reporting of the unintentional release in transportation of hazardous material; and

(5) The design, manufacture, fabrication, inspection, marking, maintenance, recondition, repair, or testing of a packaging or container represented, marked, certified, or sold as qualified for use in transporting hazardous material in commerce.

This final rule addresses subject items (1), (2), (3), and (5) above and preempts State, local, and Indian tribe requirements not meeting the ''substantively the same'' standard. Federal hazardous materials transportation law provides at 49 U.S.C. 5125(b)(2) that, if DOT issues a regulation concerning any of the covered subjects, DOT must determine and publish in the **Federal Register** the effective date of Federal preemption. The effective date may not be earlier than the 90th day following the date of issuance of the final rule and not later than two years after the date of issuance. The effective date of Federal preemption is January 1, 2015.

D. Executive Order 13175

This final rule was analyzed in accordance with the principles and criteria contained in Executive Order 13175 (''Consultation and Coordination with Indian Tribal Governments''). PHMSA received two comments concerning Executive Order 13175. PHMSA received a comment from NIRS and CACC asking how we concluded that the proposed rule would not uniquely impact communities of Indian Tribal leadership. PHMSA also received a comment from the Alaska Inter-Tribal Council stating its opposition to the assertion that our proposed rule does not significantly or uniquely affect the communities of the Indian Tribal governments. The Alaska Inter-Tribal Council states that international shipping of radioactive materials is of great concern because of the potential adverse risks to the Arctic territory and its inhabitants. It further states that consultation between tribal governments and PHMSA must occur before any changes to PHMSA rules that could potentially adversely impact tribal communities, territories, peoples and traditional ways of life.

This rule has the intended goal of harmonizing with international standards for the safe transportation of radioactive materials, making internally identified clarifications of requirements, and making changes that enhance safety while shipments of radioactive materials are in transportation. International and domestic shipments of radioactive materials are already transiting arctic waters and Alaska in compliance with the requirements of TS–R–1 or the HMR. The changes adopted in this final rule are simply creating greater harmonization with the international standard, and are not creating or authorizing new hazardous materials shipments or transit routes. Furthermore, consistency between U.S. and international regulations enhances the safety of international hazardous materials transportation through better understanding of the regulations, an increased level of industry compliance, the smooth flow of hazardous materials from their points of origin to their points of destination, and consistent emergency response in the event of a hazardous materials incident. Based on this information and the absence of specific indications to the contrary from these commenters, the revisions adopted in this final rule do not have direct tribal implications and do not impose substantial direct compliance costs on Indian tribal governments; consequently the funding and consultation requirements of Executive Order 13175 do not apply.

E. Regulatory Flexibility Act, Executive Order 13272, and DOT Procedures and Policies

The Regulatory Flexibility Act (5 U.S.C. 601 *et seq.*) requires an agency to review regulations to assess their impact on small entities and has been developed in accordance with Executive Order 13272 (''Proper Consideration of Small Entities in Agency Rulemaking'') and DOT's procedures and policies to promote compliance with the Regulatory Flexibility Act to ensure that potential impacts of draft rules on small entities are properly considered.

This final rule facilitates the transportation of hazardous materials in international commerce by providing consistency with international standards. This final rule applies to offerors and carriers of hazardous materials, some of whom are small entities, such as chemical manufacturers, users and suppliers, packaging manufacturers, distributors, and training companies. As discussed in the regulatory impact analysis, the majority of amendments in this final rule should result in cost savings and ease the regulatory compliance burden for shippers engaged in domestic and international commerce, including trans-border shipments within North America.

Many companies will realize economic benefits as a result of these amendments. Additionally, the changes effected by this final rule will relieve U.S. companies, including small entities competing in foreign markets, from the burden of complying with a dual system of regulations. Therefore, we certify that these amendments will not have a significant economic impact on a substantial number of small entities. A complete copy of the regulatory flexibility analysis for this final rule is available in the docket for this rulemaking action.

F. Paperwork Reduction Act

PHMSA currently has approved information collections under Office of Management and Budget (OMB) Control Number 2137–0034, ''Hazardous Materials Shipping Papers and Emergency Response Information,'' and OMB Control Number 2137–0510, ''Radioactive Materials Transportation Requirements.'' Specifically, this final rule will result in:

- A decrease in the annual information collection burden of OMB Control Number 2137–0034 due to reductions in the shipping paper requirements for excepted quantities of RAM shipments. These reductions in burden include not requiring the mass of these shipments on the shipping papers for air shipments in § 172.202(a)(6), the additional description in § 172.203(d) for RAM shipments, and not requiring the shippers certification statement for RAM shipments in § 172.204(c)(4) and
- an increase in the annual information collection burden of OMB Control Number 2137–0510 due to an increase in the duration of record keeping requirements in §§ 173.411(c) and 173.415(a), and the documentation required to demonstrate a package complies with testing requirements in §§ 173.415(a)(1) and (a)(2).

In response to comments received from multiple commenters we are authorizing an option for alternative documentation to allow an offeror who receives a packaging from another party acting as the manufacturer, to rely on a manufacturer's certification when available. In such instances, the offeror must maintain a copy of the manufacturer's certification and, if requested by DOT, be able to obtain a copy of the complete documentation from the manufacturer. These changes will not result in an increase of respondents or responses, as the new requirements are in addition to existing package documentation requirements.

There will however be additional costs involved in the preparation and retention of the documents in question. The manufacturer's certification is an additional document, not previously provided for in the HMR, but is merely an optional alternative to the existing package documentation requirements.

Under the Paperwork Reduction Act of 1995, no person is required to respond to an information collection unless it has been approved by OMB and displays a valid OMB control number. Section 1320.8(d), title 5, Code of Federal Regulations requires that PHMSA provide interested members of the public and affected agencies an opportunity to comment on information and recordkeeping requests.

This rule identifies revised information collection requests that PHMSA will submit to OMB for approval based on the requirements in this final rule. PHMSA has developed burden estimates to reflect changes in this final rule, and estimates the information collection and recordkeeping burden in this rule to be as follows:

OMB Control Number 2137–0034

Annual Decrease in Number of Respondents: 10,000.

Annual Decrease in Annual Number of Responses: 100,000.

Annual Decrease in Annual Burden Hours: 140.

Annual Decrease in Annual Burden Costs: $5,912.

100,000 responses at 5 seconds a response equals 140 hours at $42.23 an hour.

OMB Control Number 2137–0510.

Annual Increase in Number of Respondents: 0.

Annual Increase in Annual Number of Responses: 500.

Annual Increase in Annual Burden Hours: 6100.

Annual Increase in Annual Burden Costs: $394,731.

1400 modifications to existing responses at $64.71 an hour and four hours per response and; 500 new certifications at $64.71 an hour and one hour per response.

PHMSA will submit the revised information collection and recordkeeping requirements to OMB for approval.

G. Regulation Identifier Number (RIN)

A regulation identifier number (RIN) is assigned to each regulatory action listed in the Unified Agenda of Federal Regulations. The Regulatory Information Service Center generally publishes the Unified Agenda in April and October of each year. The RIN contained in the heading of this document can be used to cross-reference this action with the Unified Agenda.

H. Unfunded Mandates Reform Act

This final rule does not impose unfunded mandates under the Unfunded Mandates Reform Act of 1995. It does not result in costs of $141.3 million or more, adjusted for inflation, to either State, local, or tribal governments, in the aggregate, or to the private sector in any one year, and is the least burdensome alternative that achieves the objective of the rule.

I. Environmental Assessment

The National Environmental Policy Act, 42 U.S.C. 4321–4375, requires that Federal agencies analyze proposed actions to determine whether the action will have a significant impact on the human environment. In accordance with the Council on Environmental Quality (CEQ) regulations, federal agencies must conduct an environmental review considering (1) the need for the proposed action, (2) alternatives to the proposed action, (3) probable environmental impacts of the proposed action and alternatives, and (4) the agencies and persons consulted during the consideration process. 40 CFR 1508.9(b).

1. Purpose and Need

PHMSA is amending requirements in the HMR pertaining to the transportation of Class 7 (radioactive) materials to harmonize the HMR with changes contained in the IAEA publication, entitled ''Regulations for the Safe Transport of Radioactive Material, 2009 Edition, IAEA Safety Standards Series No. TS–R–1,'' and making other amendments based on PHMSA's own initiative. These amendments update, clarify, or provide relief from certain existing regulatory requirements to promote safer transportation practices, eliminate unnecessary regulatory requirements, facilitate international commerce, and make these requirements easier to understand.

2. Alternatives

In developing this rule, PHMSA considered three alternatives:

1. Do nothing;

2. Adopt the international standards in their entirety; or

3. Adopt IAEA regulations and DOT/NRC based changes that enhance safety and decrease regulatory compliance obstacles.

Alternative 1:

Because our goal is to facilitate uniformity, compliance, commerce and safety in the transportation of hazardous materials, we rejected this alternative.

Alternative 2:

By adopting the international standards in their entirety, PHMSA could potentially adopt provisions that, in our view, do not provide an adequate level of transportation safety and environmental safety and protection. Further, because we provide for domestic exceptions and extended compliance periods to minimize the potential economic impact of any revisions on the regulated community, this alternative was also rejected.

Alternative 3 is PHMSA's selected alternative, because it is the only alternative that addresses, in all respects, the purpose of this regulatory action to facilitate the safe and efficient transportation of hazardous materials in international commerce. Alternative 1 would not facilitate uniformity, compliance, commerce and safety in the transportation of hazardous materials. Alternative 2 includes, in some instances, less stringent regulations than are necessary to enhance transportation safety, and in other instances, more stringent regulations which unnecessarily increase economic burdens. In addition, PHMSA and the NRC have identified domestic-only changes that would increase safety, reduce costs, and improve compliance.

3. Analysis of Environmental Impacts

Hazardous materials are transported by aircraft, vessel, rail, and highway. The potential for environmental damage or contamination exists when packages of Class 7 (radioactive) material are involved in accidents or en route incidents resulting from cargo shifts, valve failures, package failures, or loading, unloading, or handling problems. The ecosystems that could be affected by a release include air, water, soil, and ecological resources (for example, wildlife habitats), as well as human exposure. The adverse environmental impacts associated with releases of most hazardous materials are short-term impacts that can be greatly reduced or eliminated through prompt clean-up of the accident scene. Most Class 7 (radioactive) materials are not transported in quantities sufficient to cause significant, long-term environmental damage if they are released, and those that have the potential to significantly impact human life or the environment must meet strict packaging and handling standards to ensure that even under accident conditions the hazardous material

would not be released into the environment.

The hazardous material regulatory system is a risk management system that is prevention-oriented and focused on identifying a hazard and reducing the probability and quantity of a hazardous material release. Making the regulatory provisions in the HMR clearer and more consistent with international standards will promote compliance and facilitate efficient transportation, thereby enhancing the safe transportation of hazardous materials and the protection of the environment. Relaxing certain regulatory requirements is based on PHMSA's experience, review, and conclusion that the changes are safe. PHMSA certifies that the amendments proposed in this final rule will not have a significant impact on the environment. In this final rule PHMSA is adopting the following noteworthy amendments to the HMR:

Placarding of conveyances.

In this final rule PHMSA is requiring placards to be affixed to conveyances carrying fissile material packages, unpackaged low specific activity (LSA) material or surface contaminated objects (SCO) in category I (i.e., LSA–I and SCO–I respectively), all conveyances required by §§ 173.427 and 173.441 to operate under exclusive use conditions, and all closed vehicles used in accordance with § 173.443(d). PHMSA expects a modest positive environmental impact due to awareness provided to transport personnel that shipments contain modest amounts of radioactivity, as well as a slight reduction in exposure to transportation personnel. The modest gains would not be achieved under alternative one or two.

Extension of package documentation retention requirement and clarification of information required to be maintained.

New clarification on types of information required to be retained for certain packages used to ship radioactive materials is provided in this final rule. PHMSA expects modest positive environmental gains due to a projected increase in appropriately tested and constructed packages, which will lead to a decrease in exposure to released radioactivity. As this change is a result an internal PHMSA review of existing domestic regulations, these modest environmental gains would not be achieved by selecting alternatives one or two.

Requirements for leaking or suspected leaking packages of radioactive material, or conveyance carrying leaking or suspected leaking unpackaged radioactive material.

PHMSA is adding new required actions for leaking or suspect Class 7 (radioactive) packages or unpackaged material, which include; immediate actions and assessments, protective requirements, recovery techniques, and prerequisites for continued transport. PHMSA expects modest positive environmental impact from this requirement. Increased clarity on responsibilities and actions to be taken when a leaking radioactive package is discovered are expected to reduce exposure to transportation workers and the general public. Any environmental gains from this change would be realized under alternatives two or three.

Contamination.

PHMSA is adding new as well as clarifying pre- and post-shipment requirements for Class 7 (radioactive) transport regarding external contamination of radioactive substances. PHMSA expects a modest positive environmental impact from this rulemaking. The increased clarity on responsibilities and actions to be taken before and after transportation will benefit the environment, workers, emergency responders, and the general public by minimizing the possibility of the unintended spread of radioactive contamination during routine conditions of transport. As this change is a result an internal PHMSA review of existing domestic regulations, these modest environmental gains would not be achieved by selecting alternatives one or two.

4. Agency Consultation and Finding of No Significant Impact

PHMSA, in consultation with the NRC, certifies that the amendments in this final rule will not have a significant impact on the environment.

J. Privacy Act

Anyone is able to search the electronic form of all comments received into any of our dockets by the name of the individual submitting the comments (or signing the comment, if submitted on behalf of an association, business, labor union, etc.). You may review DOT's complete Privacy Act Statement in the **Federal Register** published on April 11, 2000 (Volume 65, Number 70; Pages 19477–78) which may be viewed at *http://www.gpo.gov/fdsys/pkg/FR-2000-04-11/pdf/00-8505.pdf.*

K. Executive Order 13609 and International Trade Analysis

Under Executive Order 13609 (''Promoting International Regulatory Cooperation''), agencies must consider whether the impacts associated with significant variations between domestic and international regulatory approaches are unnecessary or may impair the ability of American businesses to export and compete internationally. In meeting shared challenges involving health, safety, labor, security, environmental, and other issues, international regulatory cooperation can identify approaches that are at least as protective as those that are or would be adopted in the absence of such cooperation. International regulatory cooperation can also reduce, eliminate, or prevent unnecessary differences in regulatory requirements.

Similarly, the Trade Agreements Act of 1979 (Pub. L. 96–39), as amended by the Uruguay Round Agreements Act (Pub. L. 103–465), prohibits Federal agencies from establishing any standards or engaging in related activities that create unnecessary obstacles to the foreign commerce of the United States. For purposes of these requirements, Federal agencies may participate in the establishment of international standards, so long as the standards have a legitimate domestic objective, such as providing for safety, and do not operate to exclude imports that meet this objective. The statute also requires consideration of international standards and, where appropriate, that they be the basis for U.S. standards.

PHMSA participates in the establishment of international standards to protect the safety of the American public, and we have assessed the effects of this final rule to ensure that it does not cause unnecessary obstacles to foreign trade. In fact, the rule is designed to facilitate international trade. Accordingly, this rulemaking is consistent with Executive Order13609 and PHMSA's obligations under the Trade Agreement Act, as amended.

List of Subjects

49 CFR Part 171

Exports, Hazardous materials transportation, Hazardous waste, Imports, Incorporation by reference, Reporting and recordkeeping requirements.

49 CFR Part 172

Education, Hazardous materials transportation, Hazardous waste, Incorporation by reference, Labeling, Markings, Packaging and containers, Reporting and recordkeeping requirements.

49 CFR Part 173

Hazardous materials transportation, Incorporation by reference, Packaging and containers, Radioactive materials,

Reporting and recordkeeping requirements, Uranium.

49 CFR Part 174

Hazardous materials transportation, Radioactive materials, Railroad safety.

49 CFR Part 175

Air carriers, Hazardous materials transportation, Incorporation by reference, Radioactive materials, Reporting and recordkeeping requirements.

49 CFR Part 176

Hazardous materials transportation, Incorporation by reference, Maritime carriers, Radioactive materials, Reporting and recordkeeping requirements.

49 CFR Part 177

Hazardous materials transportation, Motor carriers, Radioactive materials, Reporting and recordkeeping requirements.

49 CFR Part 178

Hazardous materials transportation, Incorporation by reference, Motor vehicle safety, Packaging and containers, Reporting and recordkeeping requirements.

In consideration of the foregoing, 49 CFR Chapter I is amended as follows:

PART 171—GENERAL INFORMATION, REGULATIONS, AND DEFINITIONS

■ 1. The authority citation for part 171 continues to read as follows:

Authority: 49 U.S.C. 5101–5128, 44701; Pub. L. 101–410 section 4 (28 U.S.C. 2461 note); Pub. L. 104–134, section 31001; 49 CFR 1.81 and 1.97.

■ 2. Amend § 171.7 by:
■ a. Revising paragraph (a)(1);
■ b. Removing paragraph (d)(2) and redesignating paragraphs (d)(3) through (8) as (d)(2) through (7) respectively;
■ c. Removing paragraph (i);
■ d. Removing paragraph (p);
■ e. Removing paragraph (ee);
■ f. Redesignating paragraphs (j) through (o) as (i) through (m) respectively;
■ g. Redesignating paragraphs (q) through (dd) as (n) through (bb) respectively; and
■ h. Revising newly designated paragraphs (q)(1) and (u)(9) as follows:

§ 171.7 Reference material.

(a) * * *

(1) *General.* There is incorporated, by reference in parts 171–180 of this subchapter, matter referred to that is not specifically set forth. This matter is hereby made a part of the regulations in parts 171–180 of this subchapter. The matter subject to change is incorporated only as it is in effect on the date of issuance of the regulation referring to that matter. The material listed in paragraphs (b) through (bb) of this section has been approved for incorporation by reference by the Director of the Federal Register in accordance with 5 U.S.C. 552(a) and 1 CFR part 51. Material is incorporated as it exists on the date of the approval and a notice of any change in the material will be published in the **Federal Register**. Matters referenced by footnote are included as part of the regulations of this subchapter.

* * * * *

(q) * * *

(1) No. TS–R–1, IAEA Safety Standards for Protecting People and the Environment; Regulations for the Safe Transport of Radioactive Material, (IAEA Regulations), 2009 Edition, into §§ 171.22; 171.23; 171.26, 173.415, 173.416, 173.417, 173.473.

* * * * *

(u) * * *

(9) ISO 2919:1999(E), Radiation Protection—Sealed radioactive sources—General requirements and classification, (ISO 2919), second edition, February 15, 1999, into § 173.469.

* * * * *

PART 172—HAZARDOUS MATERIALS TABLE, SPECIAL PROVISIONS, HAZARDOUS MATERIALS COMMUNICATIONS, EMERGENCY RESPONSE INFORMATION, TRAINING REQUIREMENTS, AND SECURITY PLANS

■ 3. The authority citation for part 172 continues to read as follows:

Authority: 49 U.S.C. 5101–5128, 44701; 49 CFR 1.81, 1.96 and 1.97.

■ 4. In § 172.203, paragraphs (d)(2), (d)(3), and (d)(4) are revised to read as follows:

§ 172.203 Additional description requirements.

* * * * *

(d) * * *

(2) A description of the physical and chemical form of the material:

(i) For special form materials, the words ''special form'' unless the words ''special form'' already appear in the proper shipping name; or

(ii) If the material is not in special form, a description of the physical and chemical form of the material (generic chemical descriptions are permitted).

(3) The maximum activity of the radioactive contents contained in each package during transport in terms of the appropriate SI units (*e.g.,* Becquerels (Bq), Terabecquerels (TBq)). The activity may also be stated in appropriate customary units (*e.g.,* Curies (Ci), milliCuries (mCi), microCuries (uCi)) in parentheses following the SI units. Abbreviations are authorized. Except for plutonium-239 and plutonium-241, the weight in grams or kilograms of fissile radionuclides (or the mass of each fissile nuclide for mixtures when appropriate) may be inserted instead of activity units. For plutonium-239 and plutonium-241, the weight in grams of fissile radionuclides (or the mass of each fissile nuclide for mixtures when appropriate) may be inserted in addition to the activity units.

(4) The category of label applied to each package in the shipment. For example: ''RADIOACTIVE WHITE–I,'' or ''WHITE–I.''

* * * * *

■ 5. In § 172.310, paragraph (b) is revised to read as follows:

§ 172.310 Class 7 (radioactive) materials.

* * * * *

(b) Each industrial, Type A, Type B(U), or Type B(M) package must be legibly and durably marked on the outside of the packaging, in letters at least 12 mm (0.47 in) high, with the words ''TYPE IP–1,'' ''TYPE IP–2,'' ''TYPE IP–3,'' ''TYPE A,'' ''TYPE B(U)'' or ''TYPE B(M),'' as appropriate. A package which does not conform to Type IP–1, Type IP–2, Type IP–3, Type A, Type B(U) or Type B(M) requirements may not be so marked.

* * * * *

■ 6. In § 172.402, paragraph (d)(1) is revised to read as follows:

§ 172.402 Additional labeling requirements.

* * * * *

(d) * * *

(1) A subsidiary label is not required for a package containing material that satisfies all of the criteria in § 173.4, § 173.4a, or § 173.4b applicable to the subsidiary hazard class.

* * * * *

■ 7. In § 172.403, paragraphs (d) and (g)(2) are revised to read as follows:

§ 172.403 Class 7 (radioactive) material.

* * * * *

(d) *EMPTY label.* See § 173.428(e) of this subchapter for EMPTY labeling requirements.

* * * * *

(g) * * *

(2) *Activity.* The maximum activity of the radioactive contents in the package during transport must be expressed in

appropriate SI units (*e.g.,* Becquerels (Bq), Terabecquerels (TBq)). The activity may also be stated in appropriate customary units (*e.g.,* Curies (Ci), milliCuries (mCi), microCuries (uCi)) in parentheses following the SI units. Abbreviations are authorized. Except for plutonium-239 and plutonium-241, the weight in grams or kilograms of fissile radionuclides (or the mass of each fissile nuclide for mixtures when appropriate) may be inserted instead of activity units. For plutonium-239 and plutonium-241, the weight in grams of fissile radionuclides (or the mass of each fissile nuclide for mixtures when appropriate) may be inserted in addition to the activity units.

* * * * *

■ 8. In § 172.504, paragraph (e), footnote 1 to Table 1 is revised to read as follows:

§ 172.504 General placarding requirements.

* * * * *

(e) * * *

[1] RADIOACTIVE placards are also required for: All shipments of unpackaged LSA–I material or SCO–I; all shipments required by §§ 173.427, 173.441, and 173.457 of this subchapter to be operated under exclusive use; and all closed vehicles used in accordance with § 173.443(d).

* * * * *

■ 9. In § 172.505, paragraph (b) is revised to read as follows:

§ 172.505 Placarding for subsidiary hazards.

* * * * *

(b) In addition to the RADIOACTIVE placard which may be required by § 172.504(e) of this subpart, each transport vehicle, portable tank or freight container that contains 454 kg (1,001 pounds) or more gross weight of non-fissile, fissile-excepted, or fissile uranium hexafluoride must be placarded with a CORROSIVE placard on each side and each end.

* * * * *

PART 173—SHIPPERS—GENERAL REQUIREMENTS FOR SHIPMENTS AND PACKAGINGS

■ 10. The authority citation for part 173 continues to read as follows:

Authority: 49 U.S.C. 5101–5128, 44701; 49 CFR 1.81, 1.96 and 1.97.

■ 11. In § 173.4, paragraph (a)(1)(iv) is removed and reserved, and paragraph (b) is revised to read as follows:

§ 173.4 Small quantities for highway and rail.

(a) * * *

(1) * * *

(iv) [Reserved]

* * * * *

(b) A package containing a Class 7 (radioactive) material also must conform to the requirements of § 173.421(a)(1) through (a)(5), § 173.424(a) through (g), or § 173.426(a) through (c) as applicable.

* * * * *

■ 12. In § 173.25, paragraph (a)(4) is revised to read as follows:

§ 173.25 Authorized packagings and overpacks.

(a) * * *

(4) The overpack is marked with the word ''OVERPACK'' when specification packagings are required, or for Class 7 (radioactive) material when a Type A, Type B(U), Type B(M) or industrial package is required. The ''OVERPACK'' marking is not required when the required markings representative of each package type contained in the overpack are visible from the outside of the overpack.

* * * * *

■ 13. In § 173.401, paragraph (b)(4) is revised and a new paragraph (b)(5) is added to read as follows:

§ 173.401 Scope.

* * * * *

(b) * * *

(4) Natural material and ores containing naturally occurring radionuclides which are either in their natural state, or which have only been processed for purposes other than for extraction of the radionuclides, and which are not intended to be processed for the use of these radionuclides, provided the activity concentration of the material does not exceed 10 times the exempt material activity concentration values specified in § 173.436, or determined in accordance with the requirements of § 173.433.

(5) Non-radioactive solid objects with radioactive substances present on any surfaces in quantities not exceeding the threshold limits set forth in the definition of contamination in § 173.403.

■ 14. Section 173.403 is amended as follows:

■ a. The definitions of ''contamination,'' ''criticality safety index (CSI),'' ''fissile material,'' ''low specific activity (LSA) material,'' ''radiation level,'' and ''uranium'' are revised.

■ b. In the definition of ''package,'' paragraphs (2)(i), (2)(ii), and (2)(iii) are revised to read as follows:

§ 173.403 Definitions.

* * * * *

Contamination means the presence of a radioactive substance on a surface in quantities in excess of 0.4 Bq/cm^2 for beta and gamma emitters and low toxicity alpha emitters or 0.04 Bq/cm^2 for all other alpha emitters. There are two categories of contamination:

(1) Fixed contamination means contamination that cannot be removed from a surface during normal conditions of transport.

(2) Non-fixed contamination means contamination that can be removed from a surface during normal conditions of transport.

* * * * *

Criticality Safety Index (CSI) means a number (rounded up to the next tenth) which is used to provide control over the accumulation of packages, overpacks or freight containers containing fissile material. The CSI for a package containing fissile material is determined in accordance with the instructions provided in 10 CFR 71.22, 71.23, and 71.59. The CSI for an overpack, freight container, consignment or conveyance containing fissile material packages is the arithmetic sum of the criticality safety indices of all the fissile material packages contained within the overpack, freight container, consignment or conveyance.

* * * * *

Fissile material means plutonium-239, plutonium-241, uranium-233, uranium-235, or any combination of these radionuclides. Fissile material means the fissile nuclides themselves, not material containing fissile nuclides, but does not include: Unirradiated natural uranium or depleted uranium; and natural uranium or depleted uranium that has been irradiated in thermal reactors only. Certain exceptions for fissile materials are provided in § 173.453.

* * * * *

Low Specific Activity (LSA) material means Class 7 (radioactive) material with limited specific activity which is not fissile material or is excepted under § 173.453, and which satisfies the descriptions and limits set forth below. Shielding material surrounding the LSA material may not be considered in determining the estimated average specific activity of the LSA material. LSA material must be in one of three groups:

(1) LSA–I:

(i) Uranium and thorium ores, concentrates of uranium and thorium ores, and other ores containing naturally occurring radionuclides which are intended to be processed for the use of these radionuclides; or

(ii) Natural uranium, depleted uranium, natural thorium or their

compounds or mixtures, provided they are unirradiated and in solid or liquid form; or

(iii) Radioactive material for which the A_2 value is unlimited; or

(iv) Other radioactive material in which the activity is distributed throughout and the estimated average specific activity does not exceed 30 times the values for activity concentration specified in § 173.436 or calculated in accordance with § 173.433, or 30 times the default values listed in Table 8 of § 173.433.

(2) LSA–II:

(i) Water with tritium concentration up to 0.8 TBq/L (20.0 Ci/L); or

(ii) Other radioactive material in which the activity is distributed throughout and the average specific activity does not exceed 10^{-4} A_2/g for solids and gases, and 10^{-5} A_2/g for liquids.

(3) LSA–III. Solids (*e.g.,* consolidated wastes, activated materials), excluding powders, that meet the requirements of § 173.468 and in which:

(i) The radioactive material is distributed throughout a solid or a collection of solid objects, or is essentially uniformly distributed in a solid compact binding agent (such as concrete, bitumen, ceramic, etc.);

(ii) The radioactive material is relatively insoluble, or it is intrinsically contained in a relatively insoluble material, so that, even under loss of packaging, the loss of Class 7 (radioactive) material per package by leaching when placed in water for seven days would not exceed 0.1 A_2; and

(iii) The estimated average specific activity of the solid, excluding any shielding material, does not exceed 2×10^{-3} A_2/g.

* * * * *

Package * * *

(1) * * *

(2) * * *

(i) ''Industrial package Type 1 (Type IP–1);

(ii) ''Industrial package Type 2 (Type IP–2); or

(iii) ''Industrial package Type 3 (Type IP–3).

* * * * *

Radiation level means the radiation dose-equivalent rate expressed in millisieverts per hour or mSv/h (millirems per hour or mrem/h). It consists of the sum of the dose-equivalent rates from all types of ionizing radiation present including alpha, beta, gamma, and neutron radiation. Neutron flux densities may be used to determine neutron radiation levels according to Table 1:

TABLE 1—NEUTRON FLUENCE RATES TO BE REGARDED AS EQUIVALENT TO A RADIATION LEVEL OF 0.01 mSv/h (1mrem/h) [1]

Energy of neutron	Flux density equivalent to 0.01 mSv/h (1 mrem/h) neutrons per square centimeter per second (n/cm²/s)[1]
Thermal (2.5 10E–8) MeV	272.0
1 keV	272.0
10 keV	281.0
100 keV	47.0
500 keV	11.0
1 MeV	7.5
5 MeV	6.4
10 MeV	6.7

[1] Flux densities equivalent for energies between those listed in this table may be obtained by linear interpolation.

* * * * *

Uranium—natural, depleted or *enriched* means the following:

(1)(i) ''Natural uranium'' means uranium (which may be chemically separated) containing the naturally occurring distribution of uranium isotopes (approximately 99.28% uranium-238 and 0.72% uranium-235 by mass).

(ii) ''Depleted uranium'' means uranium containing a lesser mass percentage of uranium-235 than in natural uranium.

(iii) ''Enriched uranium'' means uranium containing a greater mass percentage of uranium-235 than 0.72%.

(2) For each of these definitions, a very small mass percentage of uranium-234 may be present.

* * * * *

■ 15. In § 173.410, paragraph (i)(3) is revised to read as follows:

§ 173.410 General design requirements.

* * * * *

(i) * * *

(3) A package containing liquid contents must be capable of withstanding, without leakage, an internal pressure that produces a pressure differential of not less than the maximum normal operating pressure plus 95 kPa (13.8 psi).

■ 16. Section 173.411 is revised to read as follows:

§ 173.411 Industrial packages.

(a) *General.* Each industrial package must comply with the requirements of this section which specifies package tests, and record retention applicable to Industrial Package Type 1 (Type IP–1), Industrial Package Type 2 (Type IP–2), and Industrial Package Type 3 (Type IP–3).

(b) *Industrial package certification and tests.* (1) Each Type IP–1 package must meet the general design requirements prescribed in § 173.410.

(2) Each Type IP–2 package must meet the general design requirements prescribed in § 173.410 and when subjected to the tests specified in § 173.465(c) and (d) or evaluated against these tests by any of the methods authorized by § 173.461(a), must prevent:

(i) Loss or dispersal of the radioactive contents; and

(ii) A significant increase in the radiation levels recorded or calculated at the external surfaces for the condition before the test.

(3) Each Type IP–3 package must meet the requirements for Type IP–1 and Type IP–2 packages, and must meet the requirements specified in § 173.412(a) through (j).

(4) A portable tank may be used as a Type IP–2 or Type IP–3 package provided that:

(i) It meets the requirements for Type IP–1 packages specified in paragraph (b)(1);

(ii) It meets the requirements prescribed in Chapter 6.7 of the United Nations Recommendations on the Transport of Dangerous Goods, (IBR, *see* § 171.7 of this subchapter), ''Requirements for the Design, Construction, Inspection and Testing of Portable Tanks and Multiple-Element Gas Containers (MEGCs),'' or other requirements at least equivalent to those standards;

(iii) It is capable of withstanding a test pressure of 265 kPa (38.4 psia); and

(iv) It is designed so that any additional shielding which is provided must be capable of withstanding the static and dynamic stresses resulting from handling and routine conditions of transport and of preventing more than a 20% increase in the maximum radiation level at any external surface of the portable tanks.

(5) A cargo tank or a tank car may be used as Type IP–2 or Type IP–3 package for transporting LSA–I and LSA–II liquids and gases as prescribed in Table 6 of § 173.427, provided that:

(i) It meets the requirements for a Type IP–1 package specified in paragraph (b)(1);

(ii) It is capable of withstanding a test pressure of 265 kPa (38.4 psia); and

(iii) It is designed so that any additional shielding which is provided must be capable of withstanding the static and dynamic stresses resulting from handling and routine conditions of transport and of preventing more than a

20% increase in the maximum radiation level at any external surface of the tanks.

(6) A freight container may be used as Type IP–2 or Type IP–3 packages provided:

(i) The radioactive contents are restricted to solid materials;

(ii) It meets the requirements for a Type IP–1 packages specified in paragraph (b)(1); and

(iii) It meets the standards prescribed in the International Organization for Standardization document ISO 1496–1: ''Series 1 Freight Containers—Specifications and Testing—Part 1: General Cargo Containers; excluding dimensions and ratings (IBR, *see* § 171.7 of this subchapter). It must be designed such that if subjected to the tests prescribed in that document and the accelerations occurring during routine conditions of transport it would prevent:

(A) Loss or dispersal of the radioactive contents; and

(B) More than a 20% increase in the maximum radiation level at any external surface of the freight containers.

(7) A metal intermediate bulk containers may be used as a Type IP–2 or Type IP–3 package, provided:

(i) It meets the requirements for a Type IP–1 package specified in paragraph (b)(1); and

(ii) It meets the requirements prescribed in Chapter 6.5 of the United Nations Recommendations on the Transport of Dangerous Goods, (IBR, see § 171.7 of this subchapter), ''Requirements for the Construction and Testing of Intermediate Bulk Containers,'' for Packing Group I or II, and if subjected to the tests prescribed in that document, but with the drop test conducted in the most damaging orientation, it would prevent:

(A) Loss or dispersal of the radioactive contents; and

(B) More than a 20% increase in the maximum radiation level at any external surface of the intermediate bulk container.

(c) Except for Type IP–1 packages, each offeror of an industrial package must maintain on file for at least two years after the offeror's latest shipment, and must provide to the Associate Administrator on request, complete documentation of tests and an engineering evaluation or comparative data showing that the construction methods, package design, and materials of construction comply with that specification.

■ 17. In § 173.412, paragraphs (f) and (k)(3)(ii) are revised to read as follows:

§ 173.412 Additional design requirements for Type A packages.

* * * * *

(f) The containment system will retain its radioactive contents under the reduction of ambient pressure to 60 kPa (8.7 psia).

* * * * *

(k) * * *

(3) * * *

(ii) Have a containment system composed of primary inner and secondary outer containment components designed to enclose the liquid contents completely and ensure retention of the liquid within the secondary outer component in the event that the primary inner component leaks.

* * * * *

■ 18. In § 173.415, paragraph (a) is revised to read as follows:

§ 173.415 Authorized Type A packages.

* * * * *

(a) DOT Specification 7A (see § 178.350 of this subchapter) Type A general packaging. Until January 1, 2017 each offeror of a Specification 7A package must maintain on file for at least one year after the latest shipment, and shall provide to DOT on request, complete documentation of tests and an engineering evaluation or comparative data showing that the construction methods, packaging design, and materials of construction comply with that specification. After January 1, 2017 each offeror of a Specification 7A package must maintain on file for at least two years after the offeror's latest shipment, and shall provide to DOT on request, one of the following:

(1) A description of the package showing materials of construction, dimensions, weight, closure and closure materials (including gaskets, tape, etc.) of each item of the containment system, shielding and packing materials used in normal transportation, and the following:

(i) If the packaging is subjected to the physical tests of § 173.465, and if applicable, § 173.466, documentation of testing, including date, place of test, signature of testers, a detailed description of each test performed including equipment used, and the damage to each item of the containment system resulting from the tests, or

(ii) For any other demonstration of compliance with tests authorized in § 173.461, a detailed analysis which shows that, for the contents being shipped, the package meets the pertinent design and performance requirements for a DOT 7A Type A specification package.

(2) If the offeror has obtained the packaging from another person who meets the definition of ''packaging manufacturer'' in § 178.350(c) of this subchapter, a certification from the packaging manufacturer that the package meets all the requirements of § 178.350 for the radioactive contents presented for transport and a copy of documents maintained by the packaging manufacturer that meet the requirements of paragraph (a)(1) of this section.

* * * * *

■ 19. In § 173.416, paragraph (c) is revised to read as follows:

§ 173.416 Authorized Type B packages.

* * * * *

(c) A package approved by the U.S. Nuclear Regulatory Commission under a special package authorization granted in accordance with 10 CFR 71.41(d) provided it is offered only for domestic transportation in accordance with the requirements in § 173.471(b) and (c).

■ 20. Section 173.417 is amended as follows:

■ a. Paragraphs (a)(3) and(b)(3) are removed;

■ b Table 3 is removed; and

■ c. Paragraph (c) is revised to read as follow:

§ 173.417 Authorized fissile materials packages.

* * * * *

(c) A package approved by the U.S. Nuclear Regulatory Commission under a special package authorization granted in accordance with 10 CFR 71.41(d) provided it is offered only for domestic transportation in accordance with the requirements in § 173.471(b) and (c).

■ 21. In § 173.420, paragraph (a)(2)(ii) is removed and reserved, paragraphs (a)(3)(i) and (a)(6) are revised, and a new paragraph (e) is added to read as follows:

§ 173.420 Uranium hexafluoride (fissile, fissile excepted and non-fissile).

(a) * * *

(2) * * *

(ii) [Reserved]

* * * * *

(3) * * *

(i) withstand a hydraulic test at an internal pressure of at least 1.4 MPa (200 psig) without leakage;

* * * * *

(6) The pressure in the package at 20 °C (68 °F) must be less than 101.3 kPa (14.7 psia).

* * * * *

(e) For a package containing 0.1 kg or more of UF_6, the proper shipping name and UN number ''Radioactive material, uranium hexafluoride, UN 2978'' must be used for the transportation of non-

fissile or fissile-excepted uranium hexafluoride and the proper shipping name and UN number ''Radioactive material, uranium hexafluoride, fissile, UN 2977'' must be used for the transport of fissile uranium hexafluoride.

■ 22. Section 173.421 is revised to read as follows:

§ 173.421 Excepted packages for limited quantities of Class 7 (radioactive) materials.

A Class 7 (radioactive) material with an activity per package which does not exceed the limited quantity package limits specified in Table 4 in § 173.425, and its packaging, are excepted from requirements in this subchapter for specification packaging, marking (except for the UN identification number marking requirement described in § 173.422(a)), labeling, and if not a hazardous substance or hazardous waste, shipping papers, and the requirements of this subpart if:

(a) Each package meets the general design requirements of § 173.410;

(b) The radiation level at any point on the external surface of the package does not exceed 0.005 mSv/h (0.5 mrem/h);

(c) The non-fixed contamination on the external surface of the package does not exceed the limits specified in § 173.443(a);

(d) The outside of the inner packaging or, if there is no inner packaging, the outside of the packaging itself bears the marking ''Radioactive;''

(e) The package does not contain fissile material unless excepted by § 173.453; and

(f) The material is otherwise prepared for shipment as specified in accordance with § 173.422.

■ 23. In § 173.422, the introductory text and paragraphs (a) and (e) are revised to read as follows:

§ 173.422 Additional requirements for excepted packages containing Class 7 (radioactive) materials.

An excepted package of Class 7 (radioactive) material that is prepared for shipment under the provisions of § 173.421, § 173.424, § 173.426, or § 173.428, or a small quantity of another hazard class transported by highway or rail (as defined in § 173.4) which also meets the requirements of one of these sections, is not subject to any additional requirements of this subchapter, except for the following:

(a) The outside of each package must be marked with:

(1) The UN identification number for the material preceded by the letters UN, as shown in column (4) of the Hazardous Materials Table in § 172.101 of this subchapter; and

(2) The letters ''RQ'' on a non-bulk packaging containing a hazardous substance.

* * * * *

(e) For a material that meets the definition of a hazardous substance or a hazardous waste, the shipping paper requirements of subpart C of part 172 of this subchapter, except that such shipments are not subject to shipping paper requirements applicable to Class 7 (radioactive) materials in §§ 172.202(a)(5), 172.202(a)(6), 172.203(d) and 172.204(c)(4).

■ 24. Section 173.427 is revised to read as follows:

§ 173.427 Transport requirements for low specific activity (LSA) Class 7 (radioactive) material and surface contaminated objects (SCO).

(a) In addition to other applicable requirements specified in this subchapter, LSA material and SCO must be transported in accordance with the following conditions:

(1) The external dose rate may not exceed an external radiation level of 10 mSv/h (1 rem/h) at 3 m (10 feet) from the unshielded material;

(2) The quantity of LSA material and SCO transported in any single conveyance may not exceed the limits specified in Table 5;

(3) LSA material and SCO that are or contain fissile material must conform to the applicable requirements of § 173.453;

(4) Packaged and unpackaged Class 7 (radioactive) materials must conform to the contamination control limits specified in § 173.443;

(5) External radiation levels may not exceed those specified in § 173.441; and

(6) For LSA material and SCO consigned as exclusive use:

(i) Shipments must be loaded by the consignor and unloaded by the consignee from the conveyance or freight container in which originally loaded;

(ii) There may be no loose radioactive material in the conveyance; however, when the conveyance is the packaging, there may not be any leakage of radioactive material from the conveyance;

(iii) Packaged and unpackaged Class 7 (radioactive) material must be braced so as to prevent shifting of lading under conditions normally incident to transportation;

(iv) Specific instructions for maintenance of exclusive use shipment controls shall be provided by the offeror to the carrier. Such instructions must be included with the shipping paper information;

(v) The shipment must be placarded in accordance with subpart F of part 172 of this subchapter;

(vi) For domestic transportation only, packaged and unpackaged Class 7 (radioactive) material containing less than an A_2 quantity are excepted from the marking and labeling requirements of this subchapter, other than the subsidiary hazard labeling required in 172.402(d). However, the exterior of each package or unpackaged Class 7 (radioactive) material must be stenciled or otherwise marked ''RADIOACTIVE—LSA'' or ''RADIOACTIVE—SCO'', as appropriate, and packages or unpackaged Class 7 (radioactive) material that contain a hazardous substance must be stenciled or otherwise marked with the letters ''RQ'' in association with the description in this paragraph (a)(6)(vi); and

(vii) Transportation by aircraft is prohibited except when transported in an industrial package in accordance with Table 6 of this section, or in an authorized Type A or Type B package.

(b) Except as provided in paragraph (c) or (d) of this section, LSA material and SCO must be packaged as follows:

(1) In an industrial package (Type IP–1, Type IP–2 or Type IP–3; § 173.411), subject to the limitations of Table 6;

(2) In a DOT Specification 7A (§ 178.350 of this subchapter) Type A package;

(3) In any Type B(U) or B(M) packaging authorized pursuant to § 173.416;

(4) For domestic transportation of an exclusive use shipment that is less than an A_2 quantity, in a packaging which meets the requirements of § 173.410; or

(5) In portable tanks, cargo tanks and tank cars, as provided in §§ 173.411(b)(4) and (5), respectively.

(c) LSA–I material and SCO–I may be transported unpackaged under the following conditions:

(1) All unpackaged material, other than ores containing only naturally occurring radionuclides, must be transported in such a manner that under routine conditions of transport there will be no escape of the radioactive contents from the conveyance nor will there be any loss of shielding;

(2) Each conveyance must be under exclusive use, except when only transporting SCO–I on which the contamination on the accessible and the inaccessible surfaces is not greater than 4.0 Bq/cm² for beta and gamma emitters and low toxicity alpha emitters and 0.4 Bq/cm² for all other alpha emitters;

(3) For SCO–I where it is reasonable to suspect that non-fixed contamination may exist on inaccessible surfaces in excess of the values specified in

paragraph (c)(2) of this section, measures shall be taken to ensure that the radioactive material is not released into the conveyance or to the environment; and

(4) The highway or rail conveyance must be placarded in accordance with subpart F of part 172 of this subchapter.

(d) LSA material and SCO that exceed the packaging limits in this section must be packaged in accordance with 10 CFR part 71.

(e) Tables 5 and 6 are as follows:

TABLE 5—CONVEYANCE ACTIVITY LIMITS FOR LSA MATERIAL AND SCO

Nature of material	Activity limit for conveyances other than by inland waterway	Activity limit for hold or compartment of an inland waterway conveyance
1. LSA–I	No limit	No limit.
2. LSA–II and LSA–III; Non-combustible solids	No limit	100 A_2.
3. LSA–II and LSA–III; Combustible solids and all liquids and gases	100 A_2	10 A_2.
4. SCO	100 A_2	10 A_2.

TABLE 6—INDUSTRIAL PACKAGE INTEGRITY REQUIREMENTS FOR LSA MATERIAL AND SCO

Contents	Industrial packaging type	
	Exclusive use shipment	Non exclusive use shipment
1. LSA–I:		
Solid	Type IP–1	Type IP–1.
Liquid	Type IP–1	Type IP–2.
2. LSA–II:		
Solid	Type IP–2	Type IP–2.
Liquid and gas	Type IP–2	Type IP–3.
3. LSA–III	Type IP–2	Type IP–3.
4. SCO–I	Type IP–1	Type IP–1.
5. SCO–II	Type IP–2	Type IP–2.

■ 25. In § 173.433, paragraphs (b) introductory text, (c) introductory text, (c)(1), (d)(3) and (h) are revised to read as follows:

§ 173.433 Requirements for determining basic radionuclide values, and for the listing of radionuclides on shipping papers and labels.

* * * * *

(b) For individual radionuclides which are not listed in the tables in § 173.435 or § 173.436 or for which no relevant data are available:

* * * * *

(c) In calculating A_1 and A_2 values for approval in accordance with paragraph (b)(2) of this section:

(1) It is permissible to use an A_2 value calculated using a dose coefficient for the appropriate lung absorption type, as recommended by the International Commission on Radiological Protection, if the chemical forms of each radionuclide under both normal and accident conditions of transport are taken into consideration.

* * * * *

(d) * * *

(3) If the package contains both special and normal form Class 7 (radioactive) material, the activity which may be transported in a Type A package must satisfy:

$$\sum_i \frac{B(i)}{A_1(i)} + \sum_j \frac{C(j)}{A_2(j)} \leq 1$$

Where:

The symbols are defined as in paragraphs (d)(1) and (d)(2) of this section.

* * * * *

(h) Tables 7 and 8 are as follows:

TABLE 7—GENERAL VALUES FOR A_1 AND A_2

Radioactive contents	A_1		A_2	
	(TBq)	(Ci)	(TBq)	(Ci)
1. Only beta or gamma emitting nuclides are known to be present	1×10^{-1}	2.7×10^{0}	2×10^{-2}	5.4×10^{-1}
2. Alpha emitting nuclides, but no beta, gamma, or neutron emitters, are known to be present [1]	2×10^{-1}	5.4×10^{0}	9×10^{-5}	2.4×10^{-3}
3. Neutron emitting nuclides are known to be present or no relevant data are available	1×10^{-3}	2.7×10^{-2}	9×10^{-5}	2.4×10^{-3}

[1] If beta or gamma emitting nuclides are also known to be present, the A_1 value of 0.1 TBq (2.7 Ci) should be used.

TABLE 8—GENERAL EXEMPTION VALUES

Radioactive contents	Activity concentration for exempt material		Activity limits for exempt consignments	
	(Bq/g)	(Ci/g)	(Bq)	(Ci)
1. Only beta or gamma emitting nuclides are known to be present	1×10^{1}	2.7×10^{-10}	1×10^{4}	2.7×10^{-7}
2. Alpha emitting nuclides, but no neutron emitters, are known to be present	1×10^{-1}	2.7×10^{-12}	1×10^{3}	2.7×10^{-8}
3. Neutron emitting nuclides are known to be present or no relevant data are available	1×10^{-1}	2.7×10^{-12}	1×10^{3}	2.7×10^{-8}

■ 26. The § 173.435 table is amended by adding the entry under ''[ADD]'' and revising entries under ''[REVISE]'' in the appropriate alphabetical sequence, footnotes (a) and (c) are revised, and footnote (h) is removed and reserved to read as follows:

§ 173.435 Table of A_1 and A_2 values for radionuclides.

* * * * *

Symbol of radionuclide	Element and atomic number	A_1 (TBq)	A_1 (Ci) [b]	A_2 (TBq)	A_2 (Ci) [b]	Specific activity	
						(TBq/g)	(Ci/g)
[ADD]							
*	*	*	*	*		*	*
Kr-79	Krypton (36)	4.0×10^{0}	1.1×10^{2}	2.0×10^{0}	5.4×10^{1}	4.2×10^{4}	1.1×10^{6}
*	*	*	*	*		*	*
[REVISE]							
*	*	*	*	*		*	*
Cf-252		1×10^{-1}	2.7	3.0×10^{-3}	8.1×10^{-2}	2.0×10^{1}	5.4×10^{2}
*	*	*	*	*		*	*
Mo-99(a)(i)		1.0	2.7×10^{1}	6.0×10^{-1}	1.6×10^{1}	1.8×10^{4}	4.8×10^{5}
*	*	*	*	*		*	*

[a] A_1 and/or A_2 values for these parent radionuclides include contributions from daughter nuclides with half-lives less than 10 days as listed in footnote (a) to Table 2 in the ''IAEA Regulations for the Safe Transport of Radioactive Material, No. TS–R–1'' (IBR, see § 171.7 of this subchapter).

[b] The values of A_1 and A_2 in curies (Ci) are approximate and for information only; the regulatory standard units are Terabecquerels (TBq), (see § 171.10).

[c] The activity of Ir-192 in special form may be determined from a measurement of the rate of decay or a measurement of the radiation level at a prescribed distance from the source.

* * * * *

[h] [Reserved]

* * * * *

■ 27. The § 173.436 table is amended by adding the entry under ''[ADD]'' in the appropriate alphabetical sequence, revising the entry under ''[REVISE]'', and revising footnote (b) to read as follows:

§ 173.436 Exempt material activity concentrations and exempt consignment activity limits for radionuclides.

* * * * *

Symbol of radionuclide	*Element and atomic number*	*Activity concentration for exempt material (Bq/g)*	*Activity concentration for exempt material (Ci/g)*	*Activity limit for exempt consignment (Bq)*	*Activity limit for exempt consignment (Ci)*
[ADD]					
*	*	*	*	*	*
Kr-79	Krypton (36)	1.0×10^{3}	2.7×10^{-8}	1.0×10^{5}	2.7×10^{-6}
*	*	*	*	*	*
[REVISE]					
Te-121m		1.0×10^{2}	2.7×10^{-9}	1.0×10^{6}	2.7×10^{-5}
*	*	*	*	*	*

* * * * *

[b] Parent nuclides and their progeny included in secular equilibrium are listed as follows:
Sr-90 Y-90
Zr-93 Nb-93m

Zr-97 Nb-97
Ru-106 Rh-106
Ag-108m Ag-108
Cs-137 Ba-137m
Ce-144 Pr-144
Ba-140 La-140
Bi-212 Tl-208 (0.36), Po-212 (0.64)
Pb-210 Bi-210, Po-210
Pb-212 Bi-212, Tl-208 (0.36), Po-212 (0.64)
Rn-222 Po-218, Pb-214, Bi-214, Po-214
Ra-223 Rn-219, Po-215, Pb-211, Bi-211, Tl-207
Ra-224 Rn-220, Po-216, Pb-212, Bi-212, Tl-208 (0.36), Po-212 (0.64),
Ra-226 Rn-222, Po-218, Pb-214, Bi-214, Bi-214, Po-214, Pb-210, Bi-210, Po-210
Ra-228 Ac-228
Th-228 Ra-224, Rn-220, Po-216, Pb-212, Bi-212, Tl-208 (0.36), Po-212(0.64)
Th-229 Ra-225, Ac-225, Fr-221, At-217, Bi-213, Po-213, Pb-209
Th-nat Ra-228, Ac-228, Th-228, Ra-224, Rn-220, Po-216, Pb-212, Bi-212, Tl-208 (0.36), Po-212 (0.64)
Th-234 Pa-234m
U-230 Th-226, Ra-222, Rn-218, Po-214
U-232 Th-228, Ra-224, Rn-220, Po-216, Pb-212, Bi-212, Tl-208 (0.36), Po-212 (0.64)
U-235 Th-231
U-238 Th-234, Pa-234m
U-nat Th-234, Pa-234m, U-234, Th-230, Ra-226, Rn-222, Po-218, Pb-214, Bi-214, Po-214, Pb-210, Bi-210, Po-210
Np-237 Pa-233
Am-242m Am-242
Am-243 Np-239

* * * * *

■ 28. Section 173.443 is revised to read as follows:

§ 173.443 Contamination control.

(a) The level of non-fixed contamination must be kept as low as reasonably achievable on the external surfaces of each package, conveyance, freight container, and overpack offered for transport, and the internal surfaces of each conveyance, freight container, and overpack in which inner packages or receptacles of Class 7 (radioactive) materials are offered for transport.

(1) Excluding the interior surfaces of the containment system of packages and the internal surfaces of a conveyance, freight container, tank, or intermediate bulk container dedicated to the transport of unpackaged radioactive material in accordance with § 173.427(c) and remaining under that specific exclusive use, the level of non-fixed contamination may not exceed the limits set forth in Table 9 and must be determined by either:

(i) Wiping an area of 300 cm² of the surface concerned with an absorbent material, using moderate pressure, and measuring the activity on the wiping material. Sufficient measurements must be taken in the most appropriate locations to yield a representative assessment of the non-fixed contamination levels. The amount of radioactivity measured on any single wiping material, divided by the surface area wiped and divided by the efficiency of the wipe procedure (the fraction of non-fixed contamination transferred from the surface to the absorbent material), may not exceed the limits set forth in Table 9 at any time during transport. For this purpose the actual wipe efficiency may be used, or the wipe efficiency may be assumed to be 0.10; or

(ii) Alternatively, the level of non-fixed contamination may be determined by using other methods of equal or greater efficiency.

(2) A conveyance used for non-exclusive use shipments is not required to be surveyed unless there is reason to suspect that it may exhibit contamination.

Table 9 is as follows:

TABLE 9—NON-FIXED EXTERNAL RADIOACTIVE CONTAMINATION LIMITS FOR PACKAGES

Contaminant	*Maximum permissible limits*		
	Bq/cm²	*uCi/cm²*	*dpm/cm²*
1. Beta and gamma emitters and low toxicity alpha emitters	4	10^{-4}	240
2. All other alpha emitting radionuclides	0.4	10^{-5}	24

(b) In the case of packages transported as exclusive use shipments by rail or public highway only, except as provided in paragraph (d) of this section, at any time during transport the non-fixed contamination on the external surface of any package, as well as on the associated accessible internal surfaces of any conveyance, overpack, or freight container, may not exceed ten times the levels prescribed in paragraph (a) of this section. The levels at the beginning of transport may not exceed the levels prescribed in paragraph (a) of this section.

(c) Except as provided in paragraphs (a) and (d) of this section, each conveyance, overpack, freight container, tank, or intermediate bulk container used for transporting Class 7 (radioactive) materials as an exclusive use shipment that utilizes the provisions of paragraph (b) of this section, § 173.427(b)(4), or § 173.427(c) must be surveyed with appropriate radiation detection instruments after each exclusive use transport. Except as provided in paragraphs (a) and (d) of this section, these items may not be returned to Class 7 (radioactive) materials exclusive use transport service, and then only for a subsequent exclusive use shipment utilizing one of the above cited provisions, unless the radiation dose rate at each accessible surface is 0.005 mSv per hour (0.5 mrem per hour) or less, and there is no significant non-fixed surface contamination as specified in paragraph (a) of this section. The requirements of this paragraph do not address return to service of items outside of the above cited provisions.

(d) Paragraphs (b) and (c) of this section do not apply to any closed

transport vehicle used solely for the exclusive use transportation by highway or rail of Class 7 (radioactive) material with contamination levels that do not exceed ten times the levels prescribed in paragraph (a) of this section if—

(1) A survey of the interior surfaces of the empty vehicle shows that the radiation dose rate at any point does not exceed 0.1 mSv/h (10 mrem/h) at the surface or 0.02 mSv/h (2 mrem/h) at 1 m (3.3 feet) from the surface;

(2) Each vehicle is marked (e.g. stenciled) with the words ''For Radioactive Materials Use Only'' in letters at least 76 millimeters (3 inches) high in a conspicuous place on both sides of the exterior of the vehicle; and

(3) Each vehicle is kept closed except for loading or unloading; and

(4) Each vehicle is placarded in accordance with subpart F of part 172 of this subchapter.

(e) If it is evident that a package of radioactive material, or conveyance carrying unpackaged radioactive material, is leaking, or if it is suspected that the package, or conveyance carrying unpackaged material, may have leaked, access to the package or conveyance must be restricted and, as soon as possible, the extent of contamination and the resultant radiation level of the package or conveyance must be assessed. The scope of the assessment must include, as applicable, the package, the conveyance, the adjacent loading and unloading areas, and, if necessary, all other material which has been carried in the conveyance. When necessary, additional steps for the protection of persons, property, and the environment must be taken to overcome and minimize the consequences of such leakage. Packages, and conveyances carrying unpackaged material, which are leaking radioactive contents in excess of limits for normal conditions of transport may be removed to an interim location under supervision, but must not be forwarded until repaired or reconditioned and decontaminated, or as approved by the Associate Administrator.

■ 29. In § 173.465, paragraphs (a) and (d)(1)(i) are revised to read as follows:

§ 173.465 Type A packaging tests.

(a) The packaging, with contents, must be capable of withstanding the water spray, free drop, stacking and penetration tests prescribed in this section. One prototype may be used for all tests if the requirements of paragraph (b) of this section are met. The tests are successful if the requirements of § 173.412(j) are met.

* * * * *

(d) * * *

(1) * * *

(i) A total weight equal to five times the maximum weight of the package; or

* * * * *

■ 30. In § 173.466, paragraph (a) is revised to read as follows:

§ 173.466 Additional tests for Type A packagings designed for liquids and gases.

(a) In addition to the tests prescribed in § 173.465, Type A packagings designed for liquids and gases must be capable of withstanding the following tests in this section. The tests are successful if the requirements of § 173.412(k) are met.

* * * * *

■ 31. In § 173.469, paragraphs (b)(2)(ii), (b)(2)(iii), (d)(1) and (d)(2) are revised, and a new paragraph (e) is added to read as follows:

§ 173.469 Tests for special form Class 7 (radioactive) materials.

* * * * *

(b) * * *

(2) * * *

(ii) The flat face of the billet must be 2.5 cm (1 inch) in diameter with the edge rounded off to a radius of 3 mm ± 0.3 mm (0.12 inch ± 0.012 inch).

(iii) The lead must be of hardness number 3.5 to 4.5 on the Vickers scale and thickness not more than 25 mm (1 inch), and must cover an area greater than that covered by the specimen.

* * * * *

(d) * * *

(1) The impact test and the percussion test of this section provided that the mass of the special form material is—

(i) Less than 200 g and it is alternatively subjected to the Class 4 impact test prescribed in ISO 2919 (IBR, see § 171.7 of this subchapter), or

(ii) Less than 500 g and it is alternatively subjected to the Class 5 impact test prescribed in ISO 2919 (IBR, see § 171.7 of this subchapter); and

(2) The heat test of this section, provided the specimen is alternatively subjected to the Class 6 temperature test specified in the International Organization for Standardization document ISO 2919 (IBR, see § 171.7 of this subchapter).

(e) Special form materials that were successfully tested prior to October 1, 2014 in accordance with the requirements of paragraph (d) of this section in effect prior to October 1, 2014 may continue to be offered for transportation and transported without additional testing under this section.

■ 32. In § 173.473, paragraph (a)(1) is revised to read as follows:

§ 173.473 Requirements for foreign-made packages.

* * * * *

(a) * * *

(1) Have the foreign competent authority certificate revalidated by the U.S. Competent Authority, unless this has been done previously. Each request for revalidation must be in triplicate, contain all the information required by Section VIII of the IAEA regulations in ''IAEA Regulations for the Safe Transport of Radioactive Material, No. TS–R–1'' (IBR, see § 171.7 of this subchapter), and include a copy in English of the foreign competent authority certificate. The request and accompanying documentation must be sent to the Associate Administrator for Hazardous Materials Safety (PHH–23), Department of Transportation, East Building, 1200 New Jersey Avenue SE., Washington, DC 20590–0001. Alternatively, the request with any attached supporting documentation submitted in an appropriate format may be sent by facsimile (fax) to (202) 366–3753 or (202) 366–3650, or by electronic mail to ''*ramcert@dot.gov*.'' Each request is considered in the order in which it is received. To allow sufficient time for consideration, requests must be received at least 90 days before the requested effective date;

* * * * *

■ 33. In § 173.476, paragraph (a) is revised to read as follows:

§ 173.476 Approval of special form Class 7 (radioactive) materials.

(a) Each offeror of special form Class 7 (radioactive) materials must maintain on file for at least two years after the offeror's latest shipment, and provide to the Associate Administrator on request, a complete safety analysis, including documentation of any tests, demonstrating that the special form material meets the requirements of § 173.469. An IAEA Certificate of Competent Authority issued for the special form material may be used to satisfy this requirement.

* * * * *

■ 34. In § 173.477, paragraph (a) is revised to read as follows:

§ 173.477 Approval of packagings containing greater than 0.1 kg of non-fissile or fissile-excepted uranium hexafluoride.

(a) Each offeror of a package containing more than 0.1 kg of uranium hexafluoride must maintain on file for at least two years after the offeror's latest shipment, and provide to the Associate Administrator on request, a complete safety analysis, including documentation of any tests, demonstrating that the package meets

the requirements of § 173.420. An IAEA Certificate of Competent Authority issued for the design of the packaging containing greater than 0.1 kg of non-fissile or fissile-exempted uranium hexafluoride may be used to satisfy this requirement.

* * * * *

PART 174—CARRIAGE BY RAIL

■ 35. The authority citation for part 174 continues to read as follows:

Authority: 49 U.S.C. 5101–5128; 49 CFR 1.81 and 1.97.

■ 36. In § 174.700, paragraph (e) is removed and reserved.

■ 37. In § 174.715, paragraph (a) is revised to read as follows:

§ 174.715 Cleanliness of transport vehicles after use.

(a) Each transport vehicle used for transporting Class 7 (radioactive) materials under exclusive use conditions (as defined in § 173.403 of this subchapter) in accordance with § 173.427(b)(4), § 173.427(c), or § 173.443(b), must be surveyed with appropriate radiation detection instruments after each use. A transport vehicle may not be returned to Class 7 (radioactive) materials exclusive use transport service, and then only for a subsequent exclusive use shipment utilizing the provisions of any of the paragraphs § 173.427(b)(4), § 173.427(c), or § 173.443(b), until the radiation dose rate at any accessible surface is 0.005 mSv per hour (0.5 mrem per hour) or less, and there is no significant non-fixed contamination, as specified in § 173.443(a) of this subchapter

* * * * *

PART 175—CARRIAGE BY AIRCRAFT

■ 38. The authority citation for part 175 continues to read as follows:

Authority: 49 U.S.C. 5101–5128, 44701; 49 CFR 1.81 and 1.97.

■ 39. In § 175.702, paragraph (b) is revised to read as set forth below, and paragraph (c) is removed:

§ 175.702 Separation distance requirements for packages containing Class 7 (radioactive) materials in cargo aircraft.

* * * * *

(b) In addition to the limits on combined criticality safety indexes stated in § 175.700(b),

(1) The criticality safety index of any single group of packages must not exceed 50.0 (as used in this section, the term ''group of packages'' means packages that are separated from each other in an aircraft by a distance of 6 m (20 feet) or less); and

(2) Each group of packages must be separated from every other group in the aircraft by not less than 6 m (20 feet), measured from the outer surface of each group.

■ 40. In § 175.705, paragraph (c) is revised to read as follows:

§ 175.705 Radioactive contamination.

* * * * *

(c) An aircraft in which Class 7 (radioactive) material has been released must be taken out of service and may not be returned to service or routinely occupied until the aircraft is checked for radioactive substances and it is determined that any radioactive substances present do not meet the definition of radioactive material, as defined in § 173.403 of this subchapter.

* * * * *

PART 176—CARRIAGE BY VESSEL

■ 41. The authority citation for part 176 continues to read as follows:

Authority: 49 U.S.C. 5101–5128; 49 CFR 1.81 and 1.97.

■ 42. Section 176.715 is revised to read as follows:

§ 176.715 Contamination control.

Each hold, compartment, or deck area used for the transportation of low specific activity or surface contaminated object Class 7 (radioactive) materials under exclusive use conditions in accordance with § 173.427(b)(4), or § 173.427(c) must be surveyed with appropriate radiation detection instruments after each use. Such holds, compartments, and deck areas may not be used again for Class 7 (radioactive) materials exclusive use transport service, and then only for a subsequent exclusive use shipment utilizing the provisions of § 173.427(b)(4), or § 173.427(c) until the radiation dose rate at every accessible surface is less than 0.005 mSv/h (0.5 mrem/h), and the non-fixed contamination is not greater than the limits prescribed in § 173.443(a) of this subchapter.

PART 177—CARRIAGE BY PUBLIC HIGHWAY

■ 43. The authority citation for part 177 is revised to read as follows:

Authority: 49 U.S.C. 5101–5128; sec. 112 of Pub. L. 103–311, 108 Stat. 1673, 1676 (1994); sec. 32509 of Pub. L. 112–141, 126 Stat. 405, 805 (2012); 49 CFR 1.81 and 1.97.

■ 44. In § 177.843 paragraph (a) is revised to read as follows:

§ 177.843 Contamination of vehicles.

(a) Each motor vehicle used for transporting Class 7 (radioactive) materials under exclusive use conditions in accordance with § 173.427(b)(4), § 173.427(c), or § 173.443(b) of this subchapter must be surveyed with radiation detection instruments after each use. A vehicle may not be returned to Class 7 (radioactive) materials exclusive use transport service, and then only for a subsequent exclusive use shipment utilizing the provisions of any of the paragraphs § 173.427(b)(4), § 173.427(c), or § 173.443(b), until the radiation dose rate at every accessible surface is 0.005 mSv/h (0.5 mrem/h) or less and the non-fixed contamination is not greater than the level prescribed in § 173.443(a) of this subchapter.

* * * * *

PART 178—SPECIFICATIONS FOR PACKAGINGS

■ 45. The authority citation for part 178 continues to read as follows:

Authority: 49 U.S.C. 5101–5128; 49 CFR 1.81 and 1.97.

■ 46. In § 178.350, paragraph (c) is revised to read as follows:

§ 178.350 Specification 7A; general packaging, Type A.

* * * * *

(c) Each Specification 7A packaging must comply with the requirements of §§ 178.2 and 178.3. In § 178.3(a)(2) the term ''packaging manufacturer'' means the person certifying that the package meets all requirements of this section.

■ 47. Section 178.356 and §§ 178.356–1 through 178.358–6 are removed.

■ 48. Section 178.358 and §§ 178.358–1 through 178.358–6 are removed.

■ 49. Section 178.360 and §§ 178.360–1 through 178.360–4 are removed.

Issued in Washington, DC, on June 27, 2014 under authority delegated in 49 CFR 1.97.

Cynthia L. Quarterman,

Administrator, Pipeline and Hazardous Materials Safety Administration.

[FR Doc. 2014–15514 Filed 7–10–14; 8:45 am]

BILLING CODE 4910–60–P

Reader Aids

Federal Register

Vol. 79, No. 133

Friday, July 11, 2014

CUSTOMER SERVICE AND INFORMATION

Federal Register/Code of Federal Regulations	
General Information, indexes and other finding aids	**202–741–6000**
Laws	**741–6000**
Presidential Documents	
Executive orders and proclamations	**741–6000**
The United States Government Manual	**741–6000**
Other Services	
Electronic and on-line services (voice)	**741–6020**
Privacy Act Compilation	**741–6064**
Public Laws Update Service (numbers, dates, etc.)	**741–6043**
TTY for the deaf-and-hard-of-hearing	**741–6086**

ELECTRONIC RESEARCH

World Wide Web

Full text of the daily Federal Register, CFR and other publications is located at: **www.fdsys.gov.**

Federal Register information and research tools, including Public Inspection List, indexes, and Code of Federal Regulations are located at: **www.ofr.gov.**

E-mail

FEDREGTOC-L (Federal Register Table of Contents LISTSERV) is an open e-mail service that provides subscribers with a digital form of the Federal Register Table of Contents. The digital form of the Federal Register Table of Contents includes HTML and PDF links to the full text of each document.

To join or leave, go to **http://listserv.access.gpo.gov** and select *Online mailing list archives, FEDREGTOC-L, Join or leave the list (or change settings);* then follow the instructions.

PENS (Public Law Electronic Notification Service) is an e-mail service that notifies subscribers of recently enacted laws.

To subscribe, go to **http://listserv.gsa.gov/archives/publaws-l.html** and select *Join or leave the list (or change settings);* then follow the instructions.

FEDREGTOC-L and **PENS** are mailing lists only. We cannot respond to specific inquiries.

Reference questions. Send questions and comments about the Federal Register system to: **fedreg.info@nara.gov**

The Federal Register staff cannot interpret specific documents or regulations.

Reminders. Effective January 1, 2009, the Reminders, including Rules Going Into Effect and Comments Due Next Week, no longer appear in the Reader Aids section of the Federal Register. This information can be found online at **http://www.regulations.gov.**

CFR Checklist. Effective January 1, 2009, the CFR Checklist no longer appears in the Federal Register. This information can be found online at **http://bookstore.gpo.gov/.**

FEDERAL REGISTER PAGES AND DATE, JULY

37155–37616 1
37617–37926 2
37927–38246 3
38247–38450 7
38451–38746 8
38747–39288 9
39289–39952 10
39953–40618 11

CFR PARTS AFFECTED DURING JULY

At the end of each month the Office of the Federal Register publishes separately a List of CFR Sections Affected (LSA), which lists parts and sections affected by documents published since the revision date of each title.

3 CFR

Proclamations:
9145 37615
9146 38245
Executive Orders:
13671 39949

5 CFR

1651 38747
9301 37927
Proposed Rules:
Ch. XXII 37963

7 CFR

247 38748
400 37155
402 37155
407 37155
457 37155
906 37928
983 37930
985 37932
Proposed Rules:
354 37231

8 CFR

1003 39953

9 CFR

56 38752
145 38752
146 38752
147 38752

10 CFR

110 39289
140 38768
429 .....38130, 40542
430 .....37937, 38130, 40542
431 40542
Proposed Rules:
61 38796
Ch. II 37963
429 37963
Ch. III 37963
Ch. X 37963

12 CFR

8 38769
208 37166
225 37166
1238 37167
Proposed Rules:
46 37231
225 37420
252 37420
325 37235

14 CFR

39 .....37167, 37169, 37171, 39300, 39956, 39958, 39959, 39961
71 .....37173, 37174, 38772
73 38774
97 .....39963, 39970
234 37938
235 37938
Proposed Rules:
25 .....37670, 37674, 38266
39 .....37239, 37243, 37246, 37248, 37676, 37679, 37681, 37684, 37965, 38797, 38799, 38801, 38806, 40018
60 39462
71 37967
73 39344
1204 37252

15 CFR

774 37551
Proposed Rules:
774 37548

16 CFR

Proposed Rules:
1110 37968

17 CFR

240 .....38451, 39068
241 39068
249 38451
250 39068
400 38451
401 38451
402 38451
403 38451
405 38451
420 38451
449 38451
450 38451
Proposed Rules:
1 37973
15 37973
17 37973
19 37973
32 37973
37 37973
38 37973
140 37973
150 37973

21 CFR

510 37617
514 37175
520 37617
522 37617
529 37617
556 37617
558 .....37617, 37621, 37622
882 .....37946, 38457
890 37948
1150 39302
1308 37623
Proposed Rules:
216 37687

573 38478

22 CFR

34 39972
121 37536
Proposed Rules:
181 39346

24 CFR

Proposed Rules:
5 40019
943 40019

25 CFR

Proposed Rules:
151 37254

26 CFR

1 ....37175, 37181, 37630, 37633, 38247, 39311
31 37181
602 37633
Proposed Rules:
1 ....37697, 38809, 40031

29 CFR

1910 37189
Proposed Rules:
10 38478

30 CFR

70 38247
71 38247
72 38247
75 38247
90 38247

31 CFR

541 39312
553 38248
558 37190

33 CFR

1 38422
3 38422
8 38422
13 38422
19 38422
23 38422
25 38422
26 38422
27 38422
51 38422
52 38422
67 38422
80 38422
81 38422
83 37898
84 ....37898, 38422
85 37898
86 37898
87 37898
88 37898
89 38422
96 38422
100 ....37950, 38459, 38775, 39972, 39974
104 38422
105 38422
110 38422
114 38422
116 38422
117 ....37196, 37197, 38422, 39975
118 38422
120 38422
126 38422
127 38422
128 38422
135 38422
140 38422
141 38422
144 38422
148 38422
151 38422
153 38422
154 38422
155 38422
156 38422
157 38422
158 38422
159 38422
160 38422
161 38422
164 38422
165 ....37197, 37198, 37200, 37202, 37204, 37207, 37209, 37644, 37950, 37952, 37953, 38422, 38459, 38462, 38776
167 38422
169 38422
174 38422
179 38422
181 38422
183 38422
Proposed Rules:
100 40032
140 38841
141 38841
142 38841
143 38841
144 38841
145 38841
146 38841
147 38841
165 ....38479, 39348

34 CFR

Ch. III 38779, 38782

37 CFR

Proposed Rules:
1 40035

38 CFR

77 37211
Proposed Rules:
38 37698

39 CFR

Proposed Rules:
3050 37702

40 CFR

9 ....38464, 39268
13 37644
52 ....37222, 37224, 37646, 37956, 38787, 39322, 39330
62 39334
168 39975
272 37226
721 ....38464, 39268
Proposed Rules:
13 37704
35 37974
52 ....37255, 37258, 37976, 38273, 38810, 39351
60 ....37259, 37981, 39242
62 39360
63 37850
82 38811
168 40040
180 40043
272 37261

42 CFR

Proposed Rules:
403 40318
405 ....40208, 40318
409 38366
410 40318
411 40208
413 40208
414 ....40208, 40318
424 38366
425 40318
484 38366
488 38366
498 ....38366, 40318

44 CFR

64 ....37650, 37652, 37657

45 CFR

153 37661
Proposed Rules:
155 37262
156 37262

46 CFR

506 37662
Proposed Rules:
10 38841
11 38841
12 38841
13 38841
14 38841
15 38841

47 CFR

2 39976
20 39977
27 39336
36 39164
54 39164
64 40003
69 39164
90 39336
Proposed Rules:
1 ....37705, 37982
8 37448
27 37705
54 39196
73 37705

48 CFR

1516 37958
1552 37958
Proposed Rules:
15 39361

49 CFR

171 40590
172 40590
173 40590
174 40590
175 40590
176 40590
177 40590
178 40590
233 37664
395 39342
595 38792
1333 38254
Proposed Rules:
535 38842
571 39362

50 CFR

Ch. I 37578
17 ....38678, 39756
Ch. II 37578
223 ....38214, 40004
224 38214
226 39856
622 ....38475, 38476
635 38255
648 38259
679 ....37960, 37961, 37962, 40016
Proposed Rules:
17 37706
223 40054
224 40054
300 40055
622 ....37269, 37270
648 38274
679 37486

LIST OF PUBLIC LAWS

Note: No public bills which have become law were received by the Office of the Federal Register for inclusion in today's **List of Public Laws**.

Last List July 9, 2014

Public Laws Electronic Notification Service (PENS)

PENS is a free electronic mail notification service of newly enacted public laws. To subscribe, go to *http://listserv.gsa.gov/archives/publaws-l.html*

Note: This service is strictly for E-mail notification of new laws. The text of laws is not available through this service. **PENS** cannot respond to specific inquiries sent to this address.