AUTHENTICATED
U.S. GOVERNMENT
INFORMATION
GPO

FEDERAL REGISTER

Vol. 79 Friday,

No. 220 November 14, 2014

Pages 68093–68348

OFFICE OF THE FEDERAL REGISTER

The **FEDERAL REGISTER** (ISSN 0097–6326) is published daily, Monday through Friday, except official holidays, by the Office of the Federal Register, National Archives and Records Administration, Washington, DC 20408, under the Federal Register Act (44 U.S.C. Ch. 15) and the regulations of the Administrative Committee of the Federal Register (1 CFR Ch. I). The Superintendent of Documents, U.S. Government Printing Office, Washington, DC 20402 is the exclusive distributor of the official edition. Periodicals postage is paid at Washington, DC.

The **FEDERAL REGISTER** provides a uniform system for making available to the public regulations and legal notices issued by Federal agencies. These include Presidential proclamations and Executive Orders, Federal agency documents having general applicability and legal effect, documents required to be published by act of Congress, and other Federal agency documents of public interest.

Documents are on file for public inspection in the Office of the Federal Register the day before they are published, unless the issuing agency requests earlier filing. For a list of documents currently on file for public inspection, see *www.ofr.gov.*

The seal of the National Archives and Records Administration authenticates the Federal Register as the official serial publication established under the Federal Register Act. Under 44 U.S.C. 1507, the contents of the **Federal Register** shall be judicially noticed.

The **Federal Register** is published in paper and on 24x microfiche. It is also available online at no charge at *www.fdsys.gov*, a service of the U.S. Government Printing Office.

The online edition of the **Federal Register** is issued under the authority of the Administrative Committee of the Federal Register as the official legal equivalent of the paper and microfiche editions (44 U.S.C. 4101 and 1 CFR 5.10). It is updated by 6:00 a.m. each day the **Federal Register** is published and includes both text and graphics from Volume 59, 1 (January 2, 1994) forward. For more information, contact the GPO Customer Contact Center, U.S. Government Printing Office. Phone 202-512-1800 or 866-512-1800 (toll free). E-mail, *gpocusthelp.com.*

The annual subscription price for the **Federal Register** paper edition is $749 plus postage, or $808, plus postage, for a combined **Federal Register, Federal Register** Index and List of CFR Sections Affected (LSA) subscription; the microfiche edition of the **Federal Register** including the **Federal Register** Index and LSA is $165, plus postage. Six month subscriptions are available for one-half the annual rate. The prevailing postal rates will be applied to orders according to the delivery method requested. The price of a single copy of the daily **Federal Register,** including postage, is based on the number of pages: $11 for an issue containing less than 200 pages; $22 for an issue containing 200 to 400 pages; and $33 for an issue containing more than 400 pages. Single issues of the microfiche edition may be purchased for $3 per copy, including postage. Remit check or money order, made payable to the Superintendent of Documents, or charge to your GPO Deposit Account, VISA, MasterCard, American Express, or Discover. Mail to: U.S. Government Printing Office—New Orders, P.O. Box 979050, St. Louis, MO 63197-9000; or call toll free 1-866-512-1800, DC area 202-512-1800; or go to the U.S. Government Online Bookstore site, see *bookstore.gpo.gov.*

There are no restrictions on the republication of material appearing in the **Federal Register.**

How To Cite This Publication: Use the volume number and the page number. Example: 77 FR 12345.

Postmaster: Send address changes to the Superintendent of Documents, Federal Register, U.S. Government Printing Office, Washington, DC 20402, along with the entire mailing label from the last issue received.

SUBSCRIPTIONS AND COPIES

PUBLIC

Subscriptions:

Paper or fiche	**202–512–1800**
Assistance with public subscriptions	**202–512–1806**
General online information	**202–512–1530; 1–888–293–6498**

Single copies/back copies:

Paper or fiche	**202–512–1800**
Assistance with public single copies	**1–866–512–1800 (Toll-Free)**

FEDERAL AGENCIES

Subscriptions:

Assistance with Federal agency subscriptions:

Email	*FRSubscriptions@nara.gov*
Phone	**202–741–6000**

Printed on recycled paper.

Contents

Federal Register

Vol. 79, No. 220

Friday, November 14, 2014

Administrative Conference of the United States
NOTICES
Meetings, 68209

Agriculture Department
See Forest Service
See National Agricultural Statistics Service

Air Force Department
NOTICES
Meetings:
U.S. Air Force Academy Board of Visitors, 68224–68225

Antitrust Division
NOTICES
Changes under National Cooperative Research and Production Act:
Open Platform For NVF Project, Inc., 68301–68302
Telemanagement Forum, 68302

Antitrust
See Antitrust Division

Army Department
NOTICES
Environmental Impact Assessments; Availability, etc.:
Army 2020 Force Structure Realignment, 68225

Arts and Humanities, National Foundation
See National Foundation on the Arts and the Humanities

Blind or Severely Disabled, Committee for Purchase From People Who Are
See Committee for Purchase From People Who Are Blind or Severely Disabled

Centers for Disease Control and Prevention
NOTICES
Meetings:
Board of Scientific Counselors, Office of Infectious Diseases, 68252
Subcommittee for Dose Reconstruction Reviews, Advisory Board on Radiation and Worker Health, National Institute for Occupational Safety and Health, 68252

Centers for Medicare & Medicaid Services
NOTICES
Medicare and Medicaid Programs:
Quarterly Listing of Program Issuances—July through September 2014, 68253–68270
Medicare Program:
Prior Authorization of Repetitive Scheduled Nonemergent Ambulance Transports, 68271–68273

Civil Rights Commission
NOTICES
Meetings:
California Advisory Committee, 68211
Meetings; Sunshine Act, 68211–68212
Requests for Nominations:
South Dakota Advisory Committee, 68212

Coast Guard
RULES
2013 Liquid Chemical Categorization Updates, 68131–68132
Drawbridge Operations:
Lake Washington Ship Canal, Seattle, WA, 68120–68121
Long Island, NY Inland Waterway from East Rockaway Inlet to Shinnecock Canal, Nassau, NY, 68121

Commerce Department
See International Trade Administration
See National Oceanic and Atmospheric Administration
See Patent and Trademark Office
NOTICES
Agency Information Collection Activities; Proposals, Submissions, and Approvals, 68212–68213

Committee for Purchase From People Who Are Blind or Severely Disabled
NOTICES
Procurement List; Additions and Deletions, 68222

Commodity Futures Trading Commission
PROPOSED RULES
Records of Commodity Interest and Related Cash or Forward Transactions, 68140–68148
Residual Interest Deadline for Futures Commission Merchants, 68148–68151
NOTICES
Meetings; Sunshine Act, 68222

Defense Department
See Air Force Department
See Army Department
See Navy Department
NOTICES
Agency Information Collection Activities; Proposals, Submissions, and Approvals:
Affidavit of Individual Surety, 68249–68250
Federal Acquisition Regulation; Place of Performance, 68250–68251
Privacy Training, 68248–68249
Meetings:
National Defense University Board of Visitors, 68222–68223
Privacy Act; Systems of Records, 68223–68224

Education Department
NOTICES
Meetings:
President's Advisory Commission on Asian Americans and Pacific Islanders, 68227–68228

Employment and Training Administration
NOTICES
Federal–State Unemployment Compensation Program:
Certifications for 2014 under the Federal Unemployment Tax Act, 68302–68303

Energy Department
See Federal Energy Regulatory Commission

Environmental Protection Agency
RULES
Pesticide Tolerances:
Paraquat Dichloride, 68131
PROPOSED RULES
Certification of Pesticide Applicators Rule Revisions:
Submission to the Secretary of Agriculture, 68152–68153
National Emission Standards for Hazardous Air Pollutants:
Ferroalloys Production; Extension of Comment Period, 68152
Tolerance Crop Grouping Program IV, 68153–68172
NOTICES
Applications:
Pesticide Experimental Use Permit, 68237–68238
Certain New Chemicals; Receipt and Status Information, 68238–68242
Environmental Impact Statements; Availability, etc.:
Weekly Receipt, 68242

Federal Aviation Administration
RULES
Airspace Designations:
Incorporation by Reference Amendments, 68111–68113
Airworthiness Directives:
Various Restricted Category Helicopters, 68108–68111
Special Conditions:
Dassault Model Falcon 900EX Airplane; Electronic System-Security Protection from Unauthorized External Access, 68107–68108
PROPOSED RULES
Special Conditions:
CFM International, LEAP–1A and –1C Engine Models; Incorporation of Woven Composite Fan Blades, 68137–68139
NOTICES
Petitions for Exemption; Summaries, 68346

Federal Communications Commission
RULES
Text-to-911 and Other Next Generation 911 Applications:
Framework for Next Generation 911 Deployment, 68132–68133
PROPOSED RULES
Updating Competitive Bidding Rules:
Expanding the Economic and Innovation Opportunities of Spectrum through Incentive Auctions; Implementation of the Commercial Spectrum Enhancement Act, 68172–68202
NOTICES
Agency Information Collection Activities; Proposals, Submissions, and Approvals, 68242–68243

Federal Election Commission
PROPOSED RULES
Rulemaking Petitions:
Candidate Debates, 68137

Federal Energy Regulatory Commission
NOTICES
Applications:
Dominion Transmission, Inc., 68228–68229
Combined Filings, 68229–68231
Declaratory Orders; Petitions:
JBBR Pipeline LLC, 68231
Effectiveness of Exempt Wholesale Generator Status:
Mountain Creek Power, LLC; LaPorte Power, LLC; Handley Power, LLC, et al., 68231
Environmental Assessments; Availability, etc.:
Columbia Gulf Transmission, LLC; Cameron Access Project, 68231–68233
Grand River Dam Authority, 68233–68234
Meetings:
Dominion Transmission, Inc.; Additional Public Scoping Period for Proposed New Market Project, 68234–68236
Petitions for Declaratory Orders:
Energy Producers and Users Coalition, 68236
Staff Attendances, 68236–68237
Temporary Waivers:
Noble Energy, Inc., 68237

Federal Reserve System
RULES
Concentration Limits on Large Financial Companies, 68095–68107
NOTICES
Changes in Bank Control:
Acquisitions of Shares of a Bank or Bank Holding Company, 68243–68244
Formations of, Acquisitions by, and Mergers of Bank Holding Companies, 68244
Proposals to Engage in or to Acquire Companies Engaged in Permissible Nonbanking Activities, 68245

Federal Retirement Thrift Investment Board
RULES
Privacy Act and Freedom of Information Requests, 68093–68094

Federal Trade Commission
NOTICES
Agency Information Collection Activities; Proposals, Submissions, and Approvals, 68245–68248

Fish and Wildlife Service
NOTICES
Environmental Assessments; Availability, etc.:
Draft Multi-Species General Conservation Plan, Douglas County, WA, 68289–68291

Food and Drug Administration
RULES
Division of Freedom of Information:
Change of Office Name, and Removal of Address, Telephone Number, and Fax Number; Amendments, 68114–68116
NOTICES
Agency Information Collection Activities; Proposals, Submissions, and Approvals:
Export of Food and Drug Administration Regulated Products: Export Certificates, 68277–68278
Premarket Notification for a New Dietary Ingredient, 68275–68277
Prescription Drug Marketing Act, 68273–68275
Spousal Influence on Consumer Understanding of and Response to Direct-To-Consumer Prescription Drug Advertisements, 68278–68280
Meetings:
Blood Products Advisory Committee; Amendment, 68280–68281

Foreign Assets Control Office
NOTICES
Blocking or Unblocking of Persons and Properties, 68346–68347

Forest Service
NOTICES
Agency Information Collection Activities; Proposals, Submissions, and Approvals:
Qualified Products Lists for Fire Chemicals for Wildland Fire Management, 68209–68210

General Services Administration
NOTICES
Agency Information Collection Activities; Proposals, Submissions, and Approvals:
Affidavit of Individual Surety, 68249–68250
Federal Acquisition Regulation; Place of Performance, 68250–68251
Privacy Training, 68248–68249
Meetings:
GSA Labor–Management Relations Council, 68251

Health and Human Services Department
See Centers for Disease Control and Prevention
See Centers for Medicare & Medicaid Services
See Food and Drug Administration
See National Institutes of Health

Homeland Security Department
See Coast Guard
See U.S. Citizenship and Immigration Services
See U.S. Customs and Border Protection

Housing and Urban Development Department
NOTICES
Federal Property Suitable as Facilities to Assist the Homeless, 68286–68287

Indian Affairs Bureau
NOTICES
Indian Gaming:
Extension of Tribal-State Class III Gaming Compact, 68291
Privacy Act; Systems of Records, 68292–68295

Interior Department
See Fish and Wildlife Service
See Indian Affairs Bureau
See Land Management Bureau
See National Park Service
See Reclamation Bureau
See Surface Mining Reclamation and Enforcement Office
NOTICES
National Environmental Policy Act:
Implementing Procedures; Additions to Categorical Exclusions for Bureau of Indian Affairs, 68287–68289

International Trade Administration
NOTICES
Determinations of Sales at Less Than Fair Value:
Welded Line Pipe from the Republic of Korea and the Republic of Turkey; Investigations, 68213–68217

International Trade Commission
NOTICES
Investigations; Determinations, Modifications, and Rulings, etc.:
Certain Cases for Portable Electronic Devices, 68299
Certain Earpiece Devices Having Positioning and Retaining Structure and Components Thereof, 68298–68299
Citric Acid and Certain Citrate Salts from Canada and China; Scheduling of Full Five-Year Reviews, 68299–68300

Justice Department
See Antitrust Division
NOTICES
Consent Decrees Pursuant to the Resource Conservation and Recovery Act and the Clean Water Act, 68300–68301

Labor Department
See Employment and Training Administration

Land Management Bureau
NOTICES
Meetings:
Pecos District Resource Advisory Council, Lesser Prairie-Chicken Habitat Preservation Area of Critical Environmental Concern Livestock Grazing Subcommittee, New Mexico, 68295–68296

Legal Services Corporation
NOTICES
Meetings; Sunshine Act, 68303–68304

National Aeronautics and Space Administration
NOTICES
Agency Information Collection Activities; Proposals, Submissions, and Approvals:
Affidavit of Individual Surety, 68249–68250
Federal Acquisition Regulation; Place of Performance, 68250–68251
Privacy Training, 68248–68249
Meetings:
NASA Advisory Council Aeronautics Committee, 68304
NASA Advisory Council Science Committee, 68304–68305

National Agricultural Statistics Service
NOTICES
Meetings:
Advisory Committee on Agriculture Statistics, 68210–68211

National Archives and Records Administration
NOTICES
Agency Information Collection Activities; Proposals, Submissions, and Approvals:
Use of Official Seals and or Logos, 68305

National Foundation on the Arts and the Humanities
NOTICES
Meetings:
Arts Advisory Panel, 68305–68306

National Institutes of Health
NOTICES
Meetings:
Center for Scientific Review, 68282–68283
National Cancer Institute, 68282
National Institute of Diabetes and Digestive and Kidney Diseases, 68281
National Institute of Environmental Health Sciences, 68281
National Library of Medicine, 68281–68282

National Oceanic and Atmospheric Administration
RULES
Highly Migratory Species, 68135–68136

International Fisheries; Pacific Tuna Fisheries:
2014 Commercial Fishing for Pacific Bluefin Tuna in the Eastern Pacific Ocean; Commercial Retention Limit, 68133–68135
PROPOSED RULES
Fisheries of the Northeastern United States:
Atlantic Mackerel, Squid, and Butterfish Fisheries; Specifications and Management Measures, 68202–68208
NOTICES
Environmental Assessments; Availability, etc.:
Potential Slant Test Well Project in the Monterey Bay National Marine Sanctuary, 68217–68218
Meetings:
Fisheries of the Gulf of Mexico; Southeast Data, Assessment, and Review, 68218
South Atlantic Fishery Management Council, 68218–68221
Requests for Nominations:
Availability of Seats for National Marine Sanctuary Advisory Councils, 68221–68222

National Park Service
NOTICES
National Register of Historic Places:
Pending Nominations and Related Actions, 68296–68297

National Science Foundation
NOTICES
Meetings; Sunshine Act, 68306–68307

Navy Department
RULES
Certifications and Exemptions under the International Regulations for Preventing Collisions at Sea, 1972, 68118–68120
NOTICES
Privacy Act; Systems of Records, 68225–68227

Nuclear Regulatory Commission
NOTICES
Environmental Impact Statements; Availability, etc.:
Callaway Plant, Unit 1; License Renewal Application, 68307–68308
Guidance:
Aging Management of Loss of Coating or Lining Integrity for Internal Coatings/Linings on In Scope Piping, Piping Components, Heat Exchangers, and Tanks, 68308–68309
Meetings:
Advisory Committee on Reactor Safeguards Subcommittee on Fukushima, 68309

Patent and Trademark Office
RULES
Changes to Continued Prosecution Application Practice, 68121–68124
Changes to Permit Delayed Submission of Certain Requirements for Prioritized Examination, 68124–68127

Pension Benefit Guaranty Corporation
RULES
Benefits Payable in Terminated Single-Employer Plans:
Interest Assumptions for Paying Benefits, 68116–68118

Postal Regulatory Commission
PROPOSED RULES
Periodic Reporting, 68151–68152

Reclamation Bureau
NOTICES
Agency Information Collection Activities; Proposals, Submissions, and Approvals, 68297

Securities and Exchange Commission
NOTICES
Self-Regulatory Organizations; Proposed Rule Changes:
BATS Exchange, Inc., 68323–68327
EDGA Exchange, Inc., 68327–68328
EDGX Exchange, Inc., 68341–68342
NYSE Arca, Inc., 68321–68323, 68329–68341
The NASDAQ Stock Market LLC, 68309–68321

State Department
RULES
Publication, Coordination, and Reporting of International Agreements, 68116
NOTICES
Agency Information Collection Activities; Proposals, Submissions, and Approvals:
Affidavit of Relationship for Minors from Honduras, El Salvador and Guatemala, 68343–68344
Environmental Impact Statements; Availability, etc.:
Otay Mesa Conveyance and Disinfection System Project, 68344–68345
Presidential Permit Applications:
Columbus Land Port of Entry Replacement Facility, Columbus, NM, and Palomas, Chihuahua, Mexico, 68345

Statistical Reporting Service
See National Agricultural Statistics Service

Surface Mining Reclamation and Enforcement Office
NOTICES
Agency Information Collection Activities; Proposals, Submissions, and Approvals, 68297–68298

Transportation Department
See Federal Aviation Administration
NOTICES
Meetings:
Global Positioning System Adjacent Band Compatibility Assessment Workshop II, 68345–68346

Treasury Department
See Foreign Assets Control Office

U.S. Citizenship and Immigration Services
NOTICES
Agency Information Collection Activities; Proposals, Submissions, and Approvals:
Application for Status as Temporary Resident, 68283–68284
Request for the Return of Original Documents, 68283

U.S. Customs and Border Protection
NOTICES
Investigations; Determinations, Modifications, and Rulings, etc.:
HVAC Outdoor Units, 68284–68286

Veterans Affairs Department
RULES
Designee for Patient Personal Property, 68127–68129
Medical Regulations Based on Veterans' Health Care Eligibility Reform Act of 1996:
Technical Corrections, 68130–68131

Reader Aids

Consult the Reader Aids section at the end of this page for phone numbers, online resources, finding aids, reminders, and notice of recently enacted public laws.

To subscribe to the Federal Register Table of Contents LISTSERV electronic mailing list, go to http://listserv.access.gpo.gov and select Online mailing list archives, FEDREGTOC-L, Join or leave the list (or change settings); then follow the instructions.

CFR PARTS AFFECTED IN THIS ISSUE

A cumulative list of the parts affected this month can be found in the Reader Aids section at the end of this issue.

5 CFR
1630 68093
1631 68093

11 CFR
Proposed Rules:
110 68137

12 CFR
251 68095

14 CFR
25 68107
39 68108
71 68111
Proposed Rules:
33 68137

17 CFR
Proposed Rules:
1 (2 documents) 68140, 68148

21 CFR
5 68114
10 68114
14 68114
20 68114
21 68114
314 68114
350 68114
516 68114
814 68114

22 CFR
181 68116

29 CFR
4022 68116

32 CFR
706 (2 documents) 68118, 68119

33 CFR
117 (2 documents) 68120, 68121

37 CFR
1 (2 documents) 68121, 68124

38 CFR
12 68127
17 68130

39 CFR
Proposed Rules:
3050 68151

40 CFR
180 68131
Proposed Rules:
63 68152
171 68152
180 68153

46 CFR
30 68131
150 68131
153 68131

47 CFR
20 68132
Proposed Rules:
1 68172
27 68172

50 CFR
300 68133
635 68135
660 68133
Proposed Rules:
648 68202

Rules and Regulations

Federal Register

Vol. 79, No. 220

Friday, November 14, 2014

This section of the FEDERAL REGISTER contains regulatory documents having general applicability and legal effect, most of which are keyed to and codified in the Code of Federal Regulations, which is published under 50 titles pursuant to 44 U.S.C. 1510.

The Code of Federal Regulations is sold by the Superintendent of Documents. Prices of new books are listed in the first FEDERAL REGISTER issue of each week.

FEDERAL RETIREMENT THRIFT INVESTMENT BOARD

5 CFR Parts 1630 and 1631

Privacy Act and Freedom of Information Requests

AGENCY: Federal Retirement Thrift Investment Board.

ACTION: Final rule.

SUMMARY: The Federal Retirement Thrift Investment Board (Agency) is amending its Privacy Act and FOIA regulations to reflect the Agency's current organizational structure and to transfer responsibility for reviewing Privacy Act and FOIA requests from the Agency's Office of Resource Management (formerly known as the Office of Administration) to the Office of General Counsel.

DATES: This rule is effective November 14, 2014.

FOR FURTHER INFORMATION CONTACT: Laurissa Stokes at (202) 942–1645.

SUPPLEMENTARY INFORMATION: The Agency administers the Thrift Savings Plan (TSP), which was established by the Federal Employees' Retirement System Act of 1986 (FERSA), Public Law 99–335, 100 Stat. 514. The TSP provisions of FERSA are codified, as amended, largely at 5 U.S.C. 8351 and 8401–79. The TSP is a tax-deferred retirement savings plan for Federal civilian employees and members of the uniformed services. The TSP is similar to cash or deferred arrangements established for private-sector employees under section 401(k) of the Internal Revenue Code (26 U.S.C. 401(k)).

On April 22, 2014, the Agency published a proposed rule with request for comments in the **Federal Register** (79 FR 22454). The Agency received no comments. Therefore, the Agency is publishing the proposed rule as final without modification.

The Agency has eleven organizational offices: The Office of the Executive Director, the Office of Participant Operations and Policy, the Office of General Counsel, the Office of Investments, the Office of Communications and Education, the Office of Enterprise Planning, the Office of Enterprise Risk Management, the Office of External Affairs, the Office of Financial Management, the Office of Resource Management, and the Office of Technology Services. This regulation updates the list of Agency offices contained in section 1631.3.

The Office of Resource Management (formerly known as the Office of Administration) currently has responsibility for reviewing, processing, and responding to initial requests for disclosure and initial requests to amend non-TSP records covered under the Privacy Act of 1974, 5 U.S.C. 552a. The Executive Director currently considers appeals of initial decisions to deny access to or amendment of records in consultation with the General Counsel.

This regulation transfers the responsibility for reviewing, processing, and responding to initial requests for disclosure and initial requests to amend non-TSP records covered under the Privacy Act to the Office of General Counsel by defining ''Privacy Act Officer'' to mean ''the Board's General Counsel or his or her designee.'' The Executive Director will retain responsibility for making a final decision on appeal of an initial decision to deny access to or amendment of records. However, the Executive Director will no longer be required to consult the General Counsel before making a final determination.

Freedom of Information Act

The Office of Resource Management (formerly known as the Office of Administration) currently has responsibility for making initial determinations to approve or deny requests received pursuant to the Freedom of Information Act (FOIA), 5 U.S.C. 552. The General Counsel currently considers appeals of initial decisions to deny requests for records under the Freedom of Information Act.

This regulation transfers the responsibility for making initial determinations to approve or deny FOIA requests to the Office of General Counsel by defining ''FOIA Officer'' to mean ''the Board's General Counsel or his or her designee.'' In order to retain the opportunity for fair review on appeal, this regulation also transfers the responsibility for deciding appeals from the General Counsel to the Executive Director.

Regulatory Flexibility Act

I certify that this regulation will not have a significant economic impact on a substantial number of small entities. This regulation will affect Federal employees and members of the uniformed services who participate in the Thrift Savings Plan, which is a Federal defined contribution retirement savings plan created under the Federal Employees' Retirement System Act of 1986 (FERSA), Public Law 99–335, 100 Stat. 514, and which is administered by the Agency.

Paperwork Reduction Act

I certify that these regulations do not require additional reporting under the criteria of the Paperwork Reduction Act.

Unfunded Mandates Reform Act of 1995

Pursuant to the Unfunded Mandates Reform Act of 1995, 2 U.S.C. 602, 632, 653, 1501–1571, the effects of this regulation on state, local, and tribal governments and the private sector have been assessed. This regulation will not compel the expenditure in any one year of $100 million or more by state, local, and tribal governments, in the aggregate, or by the private sector. Therefore, a statement under section 1532 is not required.

Submission to Congress and the General Accounting Office

Pursuant to 5 U.S.C. 810(a)(1)(A), the Agency submitted a report containing this rule and other required information to the U.S. Senate, the U.S. House of Representatives, and the Comptroller General of the United States before publication of this rule in the **Federal Register**. This rule is not a major rule as defined at 5 U.S.C. 814(2).

List of Subjects

5 CFR Part 1630

Privacy.

5 CFR Part 1631

Courts, Freedom of information, Government employees.

Gregory T. Long,

Executive Director, Federal Retirement Thrift Investment Board.

For the reasons stated in the preamble, the Agency amends 5 CFR chapter VI as follows:

PART 1630—PRIVACY ACT REGULATIONS

■ 1. The authority citation for part 1630 continues to read as follows:

Authority: 5 U.S.C. 552a.

■ 2. In § 1630.2, redesignate paragraphs (g) through (r) as paragraphs (h) through (s), and add new paragraph (g) to read as follows:

§ 1630.2 Definitions.

* * * * *

(g) *Privacy Act Officer* means the Board's General Counsel or his or her designee;

* * * * *

■ 3. Amend § 1630.14, by revising the first sentence of paragraph (a) to read as follows:

§ 1630.14 Appeals process.

(a) Within 20 work days of receiving the request for review, the Executive Director will make a final determination on appeal. * * *

* * * * *

§ 1630.16 [Amended]

■ 4. In § 1630.16, paragraph (d) introductory text, remove the words and punctuation ''Head, TSP Service Office'', and add, in their place, the words ''Executive Director''.

PART 1631—AVAILABILITY OF RECORDS

Subpart A—Production or Disclosure of Records Under the Freedom of Information Act, 5 U.S.C. 552

■ 5. The authority for part 1631, subpart A, continues to read as follows:

Authority: 5 U.S.C. 552.

■ 6. Amend § 1631.1, by revising paragraph (e) to read as follows:

§ 1631.1 Definitions.

* * * * *

(e) *FOIA Officer* means the Board's General Counsel or his or her designee.

* * * * *

■ 7. Amend § 1631.3, by revising paragraph (a) to read as follows:

§ 1631.3 Organization and functions.

(a) The Federal Retirement Thrift Investment Board was established by the Federal Employees' Retirement System Act of 1986 (Pub. L. 99–335, 5 U.S.C. 8401 et seq.). Its primary function is to manage and invest the Thrift Savings Fund for the exclusive benefit of its participants (e.g., participating Federal employees, Federal judges, and Members of Congress). The Board is responsible for investment of the assets of the Thrift Savings Fund and the management of the Thrift Savings Plan. The Board consists of:

(1) The five part-time members who serve on the Board;

(2) The Office of the Executive Director;

(3) The Office of Participant Operations and Policy;

(4) The Office of General Counsel;

(5) The Office of Investments;

(6) The Office of Communications and Education;

(7) The Office of Enterprise Planning;

(8) The Office of Enterprise Risk Management;

(9) The Office of External Affairs;

(10) The Office of Financial Management;

(11) The Office of Resource Management; and

(12) The Office of Technology Services.

* * * * *

■ 8. Amend § 1631.4, by revising the first sentence of paragraph (c) to read as follows:

§ 1631.4 Public reference facilities and current index.

* * * * *

(c) The FOIA officer shall also maintain a file open to the public, which shall contain copies of all grants or denials of FOIA requests, appeals, and appeal decisions by the Executive Director. * * *

■ 9. Amend § 1631.9, by revising paragraph (b)(5) to read as follows:

§ 1631.9 Responses—form and content.

* * * * *

(b) * * *

(5) A statement that the denial may be appealed to the Executive Director within 30 calendar days of receipt of the denial or partial denial.

* * * * *

■ 10. Revise § 1631.10 to read as follows:

§ 1631.10 Appeals to the Executive Director from initial denials.

(a) When the FOIA Officer has denied a request for expedited processing or a request for records, in whole or in part, the person making the request may, within 30 calendar days of receipt of the response of the FOIA Officer, appeal the denial to the Executive Director. The appeal must be in writing, addressed to the Executive Director, Federal Retirement Thrift Investment Board, 77 K Street NE., Suite 1000, Washington, DC 20002, and be clearly labeled as a ''Freedom of Information Act Appeal.''

(b)(1) The Executive Director will act upon the appeal of a denial of a request for expedited processing within 5 work days of its receipt.

(2) The Executive Director will act upon the appeal of a denial of a request for records within 20 work days of its receipt.

(c) The Executive Director will decide the appeal in writing and mail the decision to the requester.

(d) If the appeal concerns an expedited processing request and the decision is in favor of the person making the request, the Executive Director will order that the request be processed on an expedited basis. If the decision concerning a request for records is in favor of the requester, the Executive Director will order that the subject records be promptly made available to the person making the request.

(e) If the appeal of a request for expedited processing of records is denied, in whole or in part, the Executive Director's decision will set forth the basis for the decision. If the appeal of a request for records is denied, in whole or in part, the Executive Director's decision will set forth the exemption relied on and a brief explanation of how the exemption applies to the records withheld and the reasons for asserting it, if different from the reasons described by the FOIA Officer under § 1631.9. The denial of a request for records will state that the person making the request may, if dissatisfied with the decision on appeal, file a civil action in Federal court. (A Federal court does not have jurisdiction to review a denial of a request for expedited processing after the Board has provided a complete response to the request.)

(f) No personal appearance, oral argument, or hearing will ordinarily be permitted in connection with an appeal of a request for expedited processing or an appeal for records.

(g) On appeal of a request concerning records, the Executive Director may reduce any fees previously assessed.

[FR Doc. 2014–26933 Filed 11–13–14; 8:45 am]

BILLING CODE 6760–01–P

FEDERAL RESERVE SYSTEM

12 CFR Part 251

[Regulation XX; Docket No. R–1489]

RIN 7100–AE 18

Concentration Limits on Large Financial Companies

AGENCY: Board of Governors of the Federal Reserve System (Board).

ACTION: Final rule.

SUMMARY: The Board is adopting a final rule (Regulation XX) to implement section 622 of the Dodd-Frank Wall Street Reform and Consumer Protection Act (amending the Bank Holding Company Act to add a new section 14). Section 622 establishes a financial sector concentration limit that generally prohibits a financial company from merging or consolidating with, or acquiring, another company if the resulting company's liabilities upon consummation would exceed 10 percent of the aggregate liabilities of all financial companies. In addition, the final rule establishes reporting requirements for financial companies that do not otherwise report consolidated financial information to the Board or other appropriate Federal banking agency to implement section 14 of the Bank Holding Company Act.

DATES: Effective January 1, 2015.

FOR FURTHER INFORMATION CONTACT: Laurie Schaffer, Associate General Counsel, (202) 452–2272, Christine Graham, Counsel, (202) 452–3005, or Joseph J. Carapiet, Senior Attorney, (202) 973–6957, Legal Division; Felton C. Booker, Senior Supervisory Financial Analyst, (202) 912–4651, or Sean Healey, Senior Financial Analyst, (202) 912–4611, Division of Banking Supervision and Regulation; Dean Amel, Senior Economist, (202) 452–2911; Board of Governors of the Federal Reserve System, 20th and C Streets NW., Washington, DC 20551.

SUPPLEMENTARY INFORMATION:

Table of Contents

I. Background
II. Overview of Comments
III. Financial Sector Concentration Limit
A. Calculating a Financial Company's Liabilities
1. U.S. Financial Companies
2. Foreign Financial Companies
B. Measuring Aggregate Financial Sector Liabilities
1. Methodology and Data
C. Applying the Concentration Limit
1. Measuring Liabilities Upon Consummation of a Covered Acquisition
2. Transactions for Which a Notice or Application Is Not Otherwise Required
3. Acquisitions by Nonfinancial Companies
D. Exceptions to the Concentration Limit
1. Exceptions to the Concentration Limit
a. Failing Insured Depository Institution and FDIC-Assisted Transactions
b. De Minimis Transaction
c. Prior Written Consent of the Board
E. Other Provisions of Law
IV. Administrative Law Matters
A. Solicitation of Comments on the Use of Plain Language
B. Regulatory Flexibility Act
C. Paperwork Reduction Act

I. Background

On May 8, 2014, the Board invited comment on a proposed rule to implement section 622 of the Dodd-Frank Wall Street Reform and Consumer Protection Act (''Dodd-Frank Act'') (amending the Bank Holding Company Act to add a new section 14).[1] Section 622 establishes a financial sector concentration limit that prevents an insured depository institution, a bank holding company, a foreign bank or company that is treated as a bank holding company for purposes of the Bank Holding Company Act, a savings and loan holding company, any other company that controls an insured depository institution; or a nonbank financial company designated by the Council for supervision by the Board (''financial company'') from merging and consolidating with, acquiring all or substantially all of the assets of, or otherwise acquiring control of another company (''covered acquisition'') if the resulting company's consolidated liabilities would exceed 10 percent of the aggregate consolidated liabilities of all financial companies. The concentration limit supplements the nationwide deposit cap in Federal banking law by imposing an additional limit on liabilities of financial companies.[2]

Section 622 provides that the concentration limit is ''subject to'' any recommendations made by the Financial Stability Oversight Council (''Council'') that the Council determines would more effectively implement section 622, and the Board is required to issue final regulations implementing section 622 that ''reflect any recommendations made by the Council.''[3]

On January 18, 2011, the Council made three recommendations,[4] including that the Board's regulations should:

- Measure liabilities of financial companies not subject to consolidated risk-based capital rules by using U.S. generally accepted accounting principles (GAAP) or other applicable accounting standards,
- use a two-year average in calculating aggregate financial sector liabilities, and provide that the Board publish annually by July 1 the current aggregate financial sector liabilities, and
- extend the ''failing bank exception'' to the acquisition of any type of insured depository institution in default or in danger of default, rather than only to the acquisition of banks in default or danger of default.

Section 622 of the Dodd-Frank Act directs the Council to complete a study of the extent to which the statutory concentration limit would affect financial stability, moral hazard in the financial system, the efficiency and competitiveness of U.S. financial firms and financial markets, and the cost and availability of credit and other financial services to households and businesses in the United States.[5] In the Council study, the Council expressed the view that the concentration limit would have a positive impact on U.S. financial stability by reducing the systemic risks created by increased financial sector concentration arising from covered acquisitions involving the largest U.S. financial companies.[6] It concluded that the concentration limit was likely to have little or no effect on moral hazard.[7] With respect to the impact of the concentration limit on competitiveness, the Council expected the effect to be

[1] 79 FR 27801 (May 15, 2014).

[2] 12 U.S.C. 1467a(e)(2)(E), 1828(c), 1842(d)(2), 1843(i)(8). The nationwide deposit cap generally prohibits the appropriate Federal banking agency from approving an application by a bank holding company, insured depository institution, or savings and loan holding company to acquire an insured depository institution located in a different home state than the acquiring company if the acquiring company controls, or following the acquisition would control, more than 10 percent of the total amount of deposits of insured depository institutions in the United States.

[3] *See* 12 U.S.C. 1852(e). As noted in the Senate report that accompanied the Senate Banking Committee reported bill which became the Dodd-Frank Act, ''[t]he intent [of this authority] is to have the Council determine how to effectively implement the concentration limit. . . .'' *See* S. Rep. 111–176 at 92 (Apr. 30, 2010).

[4] *Study and Recommendations Regarding Concentration Limits on Large Financial Companies* (January 2011), available at: *http://www.treasury.gov/initiatives/fsoc/studies-reports/Documents/Study%20on%20Concentration%20Limits%20on%20Large%20Firms%2001-17-11.pdf* (Council study). *See also* 76 FR 6756 (Feb. 8, 2011). The Council noted that it would review and, if appropriate, revise these recommendations in light of the comments it received. As of the date of this final rule, the Council had not revised any recommendation made regarding the concentration limit and, as such, the final rule reflects the recommendations set forth in the Council's last publication in the **Federal Register**.

[5] *See* 12 U.S.C. 1852(e)(1).

[6] Council study, p. 4.

[7] *Id.,* p. 10.

positive generally, but expressed concern that the limit introduces the potential for disparate treatment of covered acquisitions between the largest U.S. and foreign firms, depending on which firm is the acquirer or the target.[8] The Council found that the concentration limit is unlikely to have a significant effect on the cost and availability of credit and other financial services.[9]

Section 622 authorizes the Board to define terms, as necessary, and to issue interpretations or guidance regarding application of the concentration limit to an individual financial company or to financial companies in general.[10]

II. Overview of Comments

The Board received 10 comments on the proposed rule from financial trade associations, law firms, policy institutions, and individuals. While commenters generally expressed support for the proposed rule, some commenters recommended revisions to provisions of the proposed rule. For instance, one commenter suggested that the Board measure liabilities for purposes of the initial period between July 1, 2015, and June 30, 2016, using data as of December 31, 2014. One commenter requested that the Board publish more specific details of the methodology used for calculating financial sector liabilities. Commenters provided views on whether certain transactions should be prohibited once a financial company's liabilities exceeded the concentration limit and the appropriate level for a *de minimis* exception. In addition, commenters suggested that the Board not finalize either the proposed prior notice requirement applicable to financial companies with liabilities that are close to the limit or the proposed reporting requirement applicable to financial companies that do not otherwise report consolidated liabilities to an applicable Federal banking agency.

As discussed further in the preamble, the Board modified the final rule as follows in response to these comments:

- Provided that financial sector liabilities will be calculated as of December 31, 2014, for purposes of the period beginning July 1, 2015 and ending June 30, 2016, and the two-year average will be adopted for each year thereafter;
- Removed the prior notice requirement for acquisitions by financial companies with total consolidated liabilities equal to or greater than 8 percent of aggregate financial sector liabilities;
- Provided prior consent for a covered acquisition that would result in an increase in the liabilities of the financial company that does not exceed $100 million, when aggregated with all other covered acquisitions by the financial company during the twelve months preceding the consummation of the transaction and set forth a process and standard of review for *de minimis* transactions; and
- Removed the exception for merchant banking investments and added an exception for securitization transactions to the definition of ''covered acquisition.''
- Provided more specific details of the methodology used for calculating financial sector liabilities.

These changes, as well as the Board's other responses to the comments received, are discussed in greater detail below.

III. Financial Sector Concentration Limit

Under section 622 of the Dodd-Frank Act, a financial company is prohibited from consummating a covered acquisition if the ratio of the resulting financial company's liabilities to the aggregate consolidated liabilities of all financial companies exceeds 10 percent. Consistent with section 622, the proposed rule defined a ''financial company'' as a company that is an insured depository institution; a bank holding company, a foreign bank or company that is treated as a bank holding company for purposes of the Bank Holding Company Act, a savings and loan holding company, any other company that controls an insured depository institution, and a nonbank financial company designated by the Council for supervision by the Board. The proposed rule defined an insured depository institution as that term is defined in section 3(c)(2) of the Federal Deposit Insurance Act. Companies that are not affiliated with an insured depository institution, such as stand-alone broker-dealers or insurance companies, are not subject to the concentration limit unless they have been designated by the Council for supervision by the Board.

Commenters recommended that the Board modify the proposed definition of ''financial company'' to exclude insured depository institutions that are limited purpose savings associations and the holding companies thereof. Another commenter suggested that companies that control insured depository institutions but that are not subject to risk-based capital requirements and that do not engage in bank-like activities should not be included in the definition of a ''financial company'' for purposes of section 622. Section 622 of the Dodd-Frank Act defines a ''financial company'' to include an ''insured depository institution'' and ''a company that controls an insured depository institution.'' Because section 622 amends the Bank Holding Company Act, the terms ''insured depository institution'' and ''control'' are defined in section 2 of the Bank Holding Company Act.[11] To the extent a company is or controls an insured depository institution, it is subject to the concentration limit by statute. Accordingly, the final rule preserves the definition of ''insured depository institution,'' consistent with section 622.

A. Calculating a Financial Company's Liabilities

1. U.S. Financial Companies

Section 622 measures ''liabilities'' of a financial company as total risk-weighted assets determined under the risk-based capital rules applicable to bank holding companies minus regulatory capital as calculated under the same rules.[12] Currently, bank holding companies and insured depository institutions are the only classes of financial companies subject to these risk-based capital rules. For financial companies not subject to consolidated risk-based capital rules (such as nonbank companies that control savings associations and industrial loan companies), the Council

[8] *Id.,* p. 11. The Council also noted that the differences in treatment between U.S. and foreign firms could increase the degree to which the largest firms operating in the U.S. financial sector are foreign-owned, and recommended that the Board continue to monitor and report on the effect of the concentration limit on the ability of U.S. firms to compete with foreign banking organizations. The Council stated that it would make a recommendation to Congress to address adverse competitive dynamics if the Council were to later determine that there are any significant negative effects of the concentration limit because of the disparate treatment of U.S. and foreign firms. *Id.,* p. 12.

[9] *Id.,* p. 13.

[10] 12 U.S.C. 1852(d).

[11] Specifically, section 2(n) of the Bank Holding Company Act defines an ''insured depository institution'' with reference to section 3 of the Federal Deposit Insurance Act which includes ''any savings associations the deposits of which are insured'' by the FDIC. 12 U.S.C. 1841(n). Section 2(a)(2) of the Bank Holding Company Act provides that a company would ''control'' an insured depository institution if the company (i) directly or indirectly, or acting through one or more other persons, owned, controlled, or had power to vote 25 percent or more of any class of voting securities of the company; (ii) controlled in any manner the election of a majority of the directors or trustees of the company; or (iii) directly or indirectly exercised a controlling influence over the management or policies of the company. 12 U.S.C. 1841(a)(2).

[12] 12 U.S.C. 1852(a)(3).

recommended that the Board measure liabilities using GAAP or other applicable accounting standards.[13]

Pursuant to the statutory direction to adopt the Council's recommendation, the proposed rule would have required a U.S. financial company that is not subject to consolidated risk-based capital rules to calculate its liabilities in accordance with applicable accounting standards. ''Applicable accounting standards'' would have been defined as GAAP, or such other accounting standard or method of estimation that the Board determines is appropriate.[14]

Currently, U.S. savings and loan holding companies, nonbank financial companies supervised by the Board, bank holding companies with total consolidated assets of less than $500 million, and U.S. depository institution holding companies that are not bank holding companies or savings and loan holding companies are not subject to consolidated risk-based capital rules, and thus will calculate their liabilities in accordance with applicable accounting standards. Savings and loan holding companies (other than those that are substantially engaged in insurance or commercial activities) will become subject to the risk-based capital rules beginning in 2015 and will be able to calculate their liabilities for purposes of section 622 using the rules applicable to bank holding companies, described below.[15] The Board is in the process of applying risk-based capital rules to nonbank financial companies that are currently supervised by the Board.

Commenters were generally supportive of the proposed rule's calculation methodology. One commenter noted that certain mutual and fraternal insurance companies do not prepare consolidated GAAP financial statements for any regulatory purpose and, instead, prepare financial statements in accordance with statutory accounting principles (''SAP''), as required by state insurance law. This commenter requested that the Board clarify that SAP would automatically meet the definition of ''applicable accounting standards,'' and that SAP-based calculations of consolidated liabilities would be deemed sufficient for purposes of section 622. Under the financial rule, a U.S. financial company that files financial statements only in accordance with SAP and does not report consolidated financial statements under GAAP would be permitted to file an estimate of its consolidated liabilities. However, this estimation is subject to the Board's review and adjustment.

One commenter suggested that certain liabilities such as commercial paper of commercial and industrial companies, broker-dealers' customer free credit balances, managed fund assets, and funds borrowed to manufacture automobiles should be excluded from the calculation of liabilities because in the commenter's view, these liabilities do not affect U.S. financial stability. Excluding these types of liabilities from the calculation would run counter to the Council's recommendation to use liabilities as reported under GAAP or applicable accounting standards. The Council, in making this recommendation, noted that for the purpose of transparency, the liabilities calculation should use financial information that is already publicly disclosed and that using such information as reported would avoid the need to make a series of assumptions that could undermine the integrity and transparency of the calculation.[16] The commenter's suggestion of excluding certain types of liabilities would require adjustments to the publicly disclosed financial figures and involve assumptions that could undermine the transparency of the calculation. Accordingly, the final rule adopts the proposed methodology without change.

Section 622 defines the term ''liabilities'' for nonbank financial companies supervised by the Board to mean ''assets of the company as the Board shall specify by rule, in order to provide for consistent and equitable treatment of such companies.''[17] The final rule provides for consistent and equitable treatment of nonbank financial companies supervised by the Board by permitting each nonbank financial company to calculate its liabilities using applicable accounting standards until such companies are subject to risk-based capital requirements.

U.S. Financial Companies Subject to Consolidated Risk-Based Capital Rules

The proposed rule would have calculated liabilities of a U.S. financial company subject to consolidated risk-based capital rules—currently, bank holding companies and insured depository institutions—as the difference between its risk-weighted assets (as adjusted upward to reflect amounts that are deducted from regulatory capital elements pursuant to the agencies' risk-based capital rules) and its total regulatory capital, as calculated under the applicable risk-based capital rules.[18] As discussed in the preamble to the proposed rule, a bank holding company or insured depository institution will calculate risk-weighted assets for purposes of the concentration limit using the same methodology it uses to calculate risk-weighted assets under the relevant risk-based capital rules.[19]

Section 622 provides that risk-weighted assets of a financial company be ''adjusted to reflect exposures that are deducted from regulatory capital.''[20] To reflect this adjustment, the proposed rule would define liabilities of a U.S. financial company subject to consolidated risk-based capital rules as: (i) The financial company's risk-weighted assets, *plus* (ii) the amount of assets deducted from the financial company's regulatory capital multiplied by an institution-specific risk-weight, *minus* (iii) the financial company's total regulatory capital. The proposed institution-specific risk-weight applied to deducted exposures was equal to the inverse of the institution's total capital ratio minus one.[21] This approach

[13] Council study, p. 6.

[14] If a company does not calculate its total consolidated assets or liabilities under GAAP for any regulatory purpose (including compliance with applicable securities laws), the Board may, in its discretion and subject to Board review and adjustment, permit the company to provide estimated total consolidated liabilities on an annual basis using this accounting standard or method of estimation other than GAAP.

[15] The Board is developing capital rules for savings and loan holding companies that are insurance companies, have subsidiaries engaged in insurance underwriting, or are substantially engaged in commercial activities.

[16] Council study, p. 20.

[17] *See* section 622 of the Dodd-Frank Act; 12 U.S.C. 1852(a)(3)(C).

[18] The final rule refers to these amounts as ''deducted from regulatory capital.'' *See* 12 CFR 3.22 (OCC); 12 CFR 217.22 (Board); and 12 CFR 324.22 (FDIC).

[19] The agencies' risk-based capital rules require an advanced approaches banking organization (generally, a banking organization with $250 billion or more in total consolidated assets or $10 billion or more in total on-balance sheet foreign exposure or a subsidiary of such a banking organization) that has successfully completed its parallel run to calculate each of its risk-based capital ratios using the standardized approach and the advanced approaches, and directs the banking organization to use the lower of each ratio as its governing ratio. *See* 12 CFR 3.10 (OCC); 12 CFR 217.10 (Board); and 12 CFR 324.10 (FDIC).

[20] *See* 12 U.S.C. 1852(a)(3)(A)(i) and (B)(i). Under the Federal banking agencies' risk-based capital rules, bank holding companies and insured depository institutions are required to deduct fully certain assets from regulatory capital, such as goodwill, certain mortgage servicing rights, deferred tax assets, and other intangibles. *See* 12 CFR 3.22 (OCC); 12 CFR 217.22 (Board); and 12 CFR 324.22 (FDIC).

[21] One is subtracted from the inverse of the total capital ratio to account for the fact that amounts deducted from regulatory capital are not added back into regulatory capital under section 622. To illustrate this method, if an institution's total capital ratio were equal to 8 percent (the regulatory minimum), the institution-specific factor would equal $1/.08 - 1$, or $12.5 - 1$, or 11.5. If an

Continued

effectively adds back a risk-weighted amount for assets that have been deducted from capital (which are generally considered risky) without penalizing a firm for having a high amount of capital. Commenters were generally supportive of the proposed methodology, and the final rule adopts this methodology as proposed.

2. Foreign Financial Companies

Section 622 provides that the liabilities of a ''foreign financial company'' equal the risk-weighted assets and regulatory capital attributable to the company's ''U.S. operations.'' A ''foreign financial company'' includes a foreign banking organization that is a bank holding company (i.e., owns a U.S. bank) or is treated as a bank holding company (i.e., operates a U.S. branch or agency), a foreign savings and loan holding company, a foreign company that controls a U.S. insured depository institutions but is not treated as a bank holding company (such as a company that controls an industrial loan company or limited-purpose credit card bank), and a foreign nonbank financial company designated by the Council for supervision by the Board. The final rule would define ''U.S. operations'' of a foreign financial company as the consolidated liabilities of all U.S. branches, agencies, and subsidiaries (including depository institutions and non-depository institutions) domiciled in the United States (including any lower-tier subsidiary of the U.S. subsidiary, whether domestic or foreign).

Because the U.S. operations of foreign financial companies may include both entities that are subject to risk-weighted asset calculation requirements and entities that are not, the final rule (as did the proposed rule) computes U.S. liabilities using the risk-weighted asset methodology for subsidiaries subject to risk-based capital rules, and applicable accounting standards for all branches, agencies, and nonbank subsidiaries. For foreign banking organizations, the final rule computes liabilities for U.S. branches, agencies, and nonbank subsidiaries using ''assets'' under GAAP or applicable accounting standards because these operations are not required to hold regulatory capital separate from their parent.

The final rule also requires a foreign banking organization to adjust U.S. liabilities to reflect transactions with affiliates. Specifically, the measure of liabilities must include any net amounts that the branch, agency, or U.S. subsidiary has lent to the foreign bank's non-U.S. offices or non-U.S. affiliates (other than those non-U.S. affiliates owned by a U.S. subsidiary of the foreign banking organization) because these balances represent exposures of the U.S. branch, agency, or U.S. subsidiary to the non-U.S. affiliates. The amount of GAAP assets excludes amounts corresponding to balances and transactions between and among its U.S. branches, agencies, and U.S. subsidiaries (including any non-U.S. lower-tier subsidiaries of such U.S. subsidiaries) to the extent such items are not already eliminated in consolidation, to avoid double counting of assets of U.S. operations.[22]

Under the enhanced prudential standards rule adopted by the Board in February 2014, foreign banking organizations with $50 billion or more in global total consolidated assets and $50 billion or more in total non-branch U.S. assets must organize their U.S. subsidiaries under a single top-tier U.S. intermediate holding company by July 1, 2016. A U.S. intermediate holding company will be subject to the same risk-based capital requirements applicable to U.S. bank holding companies, and will calculate its liabilities for purposes of the final rule using the risk-weighted assets approach.

The U.S. assets of a foreign financial company that is not a foreign banking organization are calculated in a similar manner to the method described for foreign banking organizations, but the liabilities of a U.S. subsidiary not subject to risk-based capital rules are calculated based on the U.S. subsidiary's liabilities under applicable accounting standards, rather than its assets. In addition, the foreign financial company is permitted, but not required, to adjust the measure of liabilities for transactions with affiliates.

As noted above, section 622 requires the Board to establish the methodology for calculating the liabilities of a financial company that is an insurance company or other nonbank financial company supervised by the Board in order to provide for consistent and equitable treatment of such companies. For the reasons stated above, the final rule provides for consistent and equitable treatment of nonbank financial companies supervised by the Board by permitting each nonbank financial company to calculate its liabilities using applicable accounting standards.

B. Measuring Aggregate Financial Sector Liabilities

1. Methodology and Data

Section 622 measures the total liabilities of each covered financial company against the aggregate liabilities of all financial companies in applying the 10 percent concentration limit. The aggregate consolidated liabilities of all financial companies are equal to the sum of individual financial company liabilities as calculated for each financial company using the applicable methodology, as described above.

Consistent with the Council's recommendation, the proposed rule would have measured aggregate financial sector liabilities for a given year as the average of the financial sector liabilities as of December 31 of each of the preceding two calendar years. In order to calculate the two year period for the initial period between July 1, 2015, and June 30, 2016, the proposed rule would have required certain companies (e.g., foreign banking organizations) who are not currently subject to the reporting requirements of a Federal banking agency to calculate and report their liabilities as of December 21, 2013. One commenter suggested that the Board measure liabilities for purposes of the initial period between July 1, 2015, and June 30, 2016, using only data for one year (which would be liabilities as of December 31, 2014) and not require all financial companies to report their liabilities as of December 31, 2013. Foreign banking organizations were not otherwise required to report their U.S. assets as of December 31, 2013, and may not have data available to report their U.S. liabilities as of this date.

To relieve burden on financial companies that do not currently report to a Federal banking agency, the final rule incorporates the commenters' recommendation to use a one-year initial period. As such, pursuant to the final rule, the Board will calculated the denominator using the aggregate financial sector liabilities as of December 31, 2014 for the initial period between July 1, 2015, and June 30, 2016. For all subsequent periods, the Board will use the two-year average recommended by the Council. As discussed in further detail below, the final rule includes a new reporting requirement for financial companies that have not reported consolidated financial information to the Board or other appropriate Federal banking agency.

One commenter suggested that the Board reserve authority to adjust the calculation methodology in the event

institution's total capital ratio is equal to 16 percent (twice the regulatory minimum), the institution-specific factor would equal $1/16 - 1$, or $6.25 - 1$, or 5.25.

[22] 79 FR 17240 (March 27, 2014).

that future regulatory changes have destabilizing or distortive effects. The Board will consider adjusting the calculation methodology, if necessary because of future regulatory changes, within the limits of the law.

The preamble to the proposed rule noted that, to the maximum extent possible, the Board will calculate aggregate financial sector liabilities using information already reported by financial companies. For instance, bank holding companies report their risk-weighted assets, regulatory deductions, and total capital on the Consolidated Financial Statements for Holding Companies (FR Y–9C), and the Board will use this information to calculate liabilities of these firms. For bank holding companies with total consolidated assets of less than $500 million, the Board will measure consolidated liabilities by taking the difference between total consolidated assets minus the equity capital of such company on a consolidated basis, which amounts are reported on the Parent Company Only Financial Statements for Small Holding Companies (FR Y–9SP). For foreign banking organizations, the Board will use information reported on the Capital and Asset Report for Foreign Banking Organizations (FR Y–7Q) to the extent possible. In 2013, the Board amended the FR Y–7Q to require foreign banking organizations to report a new item entitled ''Total combined assets of U.S. operations, net of intercompany balances and transactions between U.S. domiciled affiliates, branches, and agencies.'' Foreign banking organizations began reporting this item as of March 31, 2014.[23]

In order to collect data necessary to implement the concentration limit, the proposed rule would have established a new reporting requirement for financial companies that have not historically reported consolidated financial information to the Board or other appropriate Federal banking agency.[24] The new reporting requirement, the Financial Company Report of Consolidated Liabilities, would have required financial companies domiciled in the United States to report their total consolidated liabilities under applicable accounting standards and would require financial companies domiciled in a country other than the United States to report the sum of the total consolidated liabilities of each top-tier U.S. subsidiary of the financial company, as determined under applicable accounting standards.[25] The report is referred to as the FR XX–1 report because it is being adopted pursuant to Regulation XX.[26]

One commenter argued that requiring financial companies that are not state member banks, bank holding companies, or subsidiaries of bank holding companies to submit FR XX–1 exceeds the Board's authority. This commenter also argued that requiring financial companies to submit the FR XX–1 imposes a disproportionate burden on financial companies that do not report liabilities to the Board, the estimated burden of 1 hour per respondent was too low, and that the reporting form should have been published in the **Federal Register**.

Section 622 provides that ''the Board shall issue regulations implementing this section in accordance with the recommendations of the Council.''[27] The proposed information collection is necessary for the Board to calculate aggregate liabilities and is consistent with the Board's statutory authority. With regard to the commenter's assertion that the reporting form is unduly burdensome, the proposed reporting form collects a single line item and collects the minimum information necessary to calculate an institution's liabilities. However, after taking into account the comment, the Board has adjusted the burden to be 5 hours per respondent for the first year, and 2 hours per respondent thereafter. The higher initial burden is intended to reflect time needed to educate staff, develop an approval process for the submitted report, and, for firms that seek to rely on accounting standards other than GAAP, develop a method of estimation. After this process is established, the aggregate burden to complete this form is expected to be 2 hours per respondent per year. Finally, the preamble to the proposed rule described the FR XX–1 in detail, and the form was available on the Board's Web site for comment. The Board is adopting the FR XX–1 as proposed. The Board will begin collecting the FR XX–1 as of December 31, 2014, and the submission date is 90 calendar days after the December 31 as-of-date.

As discussed in the preamble to the proposed rule, information contained in a FR XX–1 filing generally will be made available to the public upon request. The Board proposed allowing a reporting holding company to request confidential treatment for the report if the holding company believed that disclosure of specific commercial or financial information in the report would likely result in substantial harm to its competitive position or that disclosure of the submitted information would result in unwarranted invasion of personal privacy. One commenter requested either that all reported information be treated as confidential information or that financial companies be permitted to make a one-time election for confidential treatment.

The Freedom of Information Act, 5 U.S.C. § 552, (FOIA) requires the Board to release information to the public unless a specific exemption applies.[28] Reporting companies may request confidentiality but such requests must contain detailed justifications corresponding to the claimed FOIA exemption. In such cases, the burden is on the reporting company to demonstrate that the information falls within one of the exemptions under the FOIA. Requests for confidentiality must be evaluated on a case-by-case basis. If a reporting company requests confidential treatment, the Board will review the request to determine if the company has met the burden of demonstrating a particular FOIA exemption applies.

One commenter requested that the Board provide additional detail on the methodology it uses to calculate aggregate financial sector liabilities for U.S. bank holding companies and foreign banking organizations. For U.S. bank holding companies, insured depository institutions, and savings and loan holding companies, the Board intends to rely on total risk-weighted assets, as reported on schedule HC–R, Regulatory Capital, of the FR Y–9C, and adjust that amount for amounts deducted from regulatory capital, as reported on schedule HC–R, multiplied by the institution-specific risk weight. In calculating the amounts deducted from regulatory capital, the Board will sum the total adjustments and deductions for the categories of regulatory capital (e.g., common equity tier 1 capital and additional tier 1 capital). For foreign banking organizations, the Board generally intends to use the item on the FR Y–7Q

[23] Some respondents will not report the new item on the FR Y–7Q until December 2014.

[24] These institutions include savings and loan holding companies where the top-tier holding company is an insurance company that only prepares financial statements in accordance with SAP, holding companies of industrial loan companies, limited-purpose credit card banks, and limited-purpose trust banks, and currently, nonbank financial companies supervised by the Board.

[25] A parent holding company would have been permitted, but not required, to reduce total liabilities by amounts corresponding to balances and transactions between U.S. subsidiaries of the parent holding company to the extent such items would not already be eliminated in consolidation.

[26] The proposal referred to this report as the FR Y–17 report.

[27] *See* 12 U.S.C. 1852(a)(3)(C).

[28] 5 U.S.C. § 552.

entitled ''Total combined assets of U.S. operations, net of intercompany balances and transactions between U.S. domiciled affiliates, branches, and agencies'' and, to the extent that a foreign banking organization has a U.S. bank holding company subsidiary, subtract assets attributable to the U.S. bank holding company and replace that amount with liabilities attributable to the U.S. bank holding company (calculated in accordance with the risk-weighted asset methodology, using data from the FR Y–9C). To the extent that the Board uses different regulatory reporting sources to calculate liabilities, it generally expects to describe the sources in connection with publication of the financial sector liabilities figure.

One commenter asked that the Board set forth a specific schedule for a review and ex post evaluation of the final rule. The Board generally reviews its rules every five years in order to update requirements, reduce unnecessary burden, and streamline regulatory requirements based on the Board's experience in implementing a rule. As such, the Board does not believe that a separate schedule for a review and ex post evaluation of the final rule is necessary.

C. Applying the Concentration Limit

Section 622 prohibits a financial company from consummating a covered acquisition if the liabilities of the resulting financial company upon consummation of the covered acquisition would exceed 10 percent of aggregate financial sector liabilities.

1. Measuring Liabilities Upon Consummation of a Covered Acquisition

The proposed rule set forth a method for calculating liabilities upon consummation of an acquisition subject to the concentration limit (''covered acquisition''). As set forth in the proposed rule, where a covered acquisition would involve a foreign acquirer and a foreign target, the final rule would provide that liabilities immediately upon consummation of the covered acquisition would equal the total consolidated liabilities of the U.S. operations of the resulting foreign financial company, but would not include liabilities of the foreign operations of either the acquiring foreign bank or the target foreign firm, except to the extent these foreign assets are controlled by a U.S. subsidiary or branch of either foreign entity. Also in the case of a cross-border covered acquisition involving a U.S. company, the proposal rule would have included the liabilities of both the U.S. and foreign subsidiaries of the U.S. company, regardless of whether the U.S. company is the acquirer or target. The final rule adopts the proposed methodology without change.

2. Transactions for Which a Notice or Application Is Not Otherwise Required

Under the proposed rule, prior to consummating a covered acquisition, a financial company that was not otherwise required to file a prior notice or application with the Board would have been required to provide written notice to the Board if the company's liabilities immediately after consummation of the transaction would be above 8 percent of the aggregate financial sector liabilities and the covered acquisition would increase the liabilities of the resulting financial company by more than $2 billion, when aggregated with all other covered acquisitions during the twelve months preceding the consummation of the transaction. This provision was proposed to provide notification to the Board regarding covered financial firms that were nearing the concentration limit.

Commenters suggested that the Board not adopt this requirement because financial companies are well-placed to monitor their own compliance with the limit and will have incentives to consult with the Board should a transaction put the company at risk of exceeding the limit, given that the statute prohibits transactions that exceed the limit. One commenter argued that the imposition of a prior notice requirement would add burden and create administrative difficulties for financial companies without a corresponding benefit.

In light of commenters' views, the final rule does not include a prior notice requirement. If a company consummates a covered acquisition in violation of the limit, the company may be required to divest any company or assets acquired in violation of the limit. In order to ensure compliance with the concentration limit, a financial company should have policies and procedures in place to monitor its compliance with section 622. In addition, the Board will consider compliance with the concentration limit in reviewing proposed acquisitions or mergers under other laws such as the Bank Holding Company Act. If the Board receives a notice or application related to a covered acquisition, the Board will consider whether the transaction is permissible under section 622.

3. Acquisitions by Nonfinancial Companies

Under the proposed rule, a covered acquisition between a financial company and a company that is not a financial company under section 622, including those in which the nonfinancial company is the acquirer, and becomes a financial company as a result of the transaction, would be covered by the limit. The final rule adopts this approach substantively as proposed.

D. Exceptions to the Concentration Limit

The statute exempts three types of acquisitions from the concentration limit: (i) An acquisition of a bank in default or in danger of default; (ii) an acquisition with respect to which the FDIC provides assistance under section 13(c) of the Federal Deposit Insurance Act; and (iii) an acquisition that would result only in a *de minimis* increase in the liabilities of the financial company.[29] Under the statute, each of these types of transactions requires prior written consent of the Board.[30]

1. Exceptions to the Concentration Limit

a. Failing Insured Depository Institution and FDIC-Assisted Transactions

The proposed rule provided that, with prior written consent of the Board, the concentration limit would not apply to the acquisition of an insured depository institution in default or in danger of default, as determined by the appropriate Federal banking agency of the insured depository institution, in consultation with the Board. The proposed rule was consistent with the Council's recommendations to expand the ''failing bank exception'' to apply to the acquisition of any type of insured depository institution in default or in danger of default.[31] This would include savings associations and industrial loan

[29] *See* 12 U.S.C. 1852(c).

[30] *Id.*

[31] The Council noted that section 622 does not restrict an acquisition of a ''bank'' (as that term is defined in the Bank Holding Company Act) in default or in danger of default, subject to the prior written consent of the Board; however, this exception applies by its terms to a failing ''bank,'' rather than all types of failing insured depository institutions, including savings associations, industrial loan companies, and limited-purpose credit card banks. According to the Council, ''the important policy that supports the exception for the acquisition of failing banks—namely, the strong public interest in limiting the costs to the Deposit Insurance Fund that could arise if a bank were to fail, which might be partly or wholly limited through acquisition of a failing bank by another firm—applies equally to insured depository institutions generally, and is not limited to ''banks'' as that term is defined in the [Bank Holding Company Act].''

companies, for example. Similarly, the proposed rule would have provided that, with prior written consent of the Board, the concentration limit would not apply to a covered acquisition with respect to which assistance is provided by the Federal Deposit Insurance Corporation under section 13(c) of the Federal Deposit Insurance Act (12 U.S.C. 1823(c)). The final rule adopts these proposed exceptions without change.

b. De Minimis Transaction

The proposed rule would have defined a *de minimis* increase for purposes of the concentration limit as an increase in the total consolidated liabilities of a financial company that does not exceed $2 billion, when aggregated with all other acquisitions by the company under the *de minimis* authority during the twelve months preceding the date of the transaction. One commenter recommended that the Board raise the amount from $2 billion to $5 billion and another urged the Board to undertake further empirical analysis to determine the appropriate limit.

The final rule maintains the $2 billion threshold. As the Council noted, section 622 is intended, along with a number of other provisions in the Dodd-Frank Act, to promote financial stability.[32] Section 604 of the Dodd-Frank Act is another provision that, like section 622, is designed to promote financial stability. It amended sections 3 and 4 of the Bank Holding Company Act to require the Board to evaluate the risks to the stability of the U.S. banking or financial system in reviewing proposed acquisitions of banks and nonbanks by bank holding companies.[33] In approving the acquisition by Capital One Financial Corporation of ING Bank, fsb, the Board offered three examples of transactions it may presume, absent other evidence, not to present financial stability concerns: (1) An acquisition of less than $2 billion of assets, (2) a transaction resulting in a firm with less than $25 billion in total assets, or (3) a corporate reorganization. Similarly, in the Board's view, a $2 billion threshold is appropriate as a de minimis threshold in this rule because it would only permit those covered acquisitions that would not likely, on their own, increase risk to financial stability posed by concentration in the financial sector.[34]

c. Prior Written Consent of the Board

Under the proposed rule, a financial company that sought to consummate a covered acquisition that qualifies for an exception described above must obtain the prior written consent of the Board, in addition to any other regulatory notices or approvals otherwise required for the covered acquisition. One commenter recommended that the final rule set forth an explicit standard under which the Board would review a proposed transaction—specifically, whether the consummation of the proposed acquisition would create a level of concentration in the financial sector that would pose a threat to financial stability. In addition, the commenter requested that the Board specify the process under which it will review a *de minimis* acquisition.

In response to comments, the final rule provides additional detail on the process and standard under which the Board will review a *de minimis* acquisition. Under the final rule, a financial company that seeks to make *de minimis* covered acquisition must file a request with the Board prior to consummation of the proposed transaction that describes the covered acquisition, the projected increase in the company's liabilities resulting from the acquisition, the aggregate increase in the company's liabilities from acquisitions during the twelve months preceding the projected date of the acquisition, and any additional information requested by the Board. The Board will act on such a request within 90 calendar days after receipt of the complete request, unless that time period is extended by the Board. To the extent that a proposed transaction requires approval by, or prior notice to, the Board under another statutory provision (for example, under the Bank Holding Company Act) the Board intends to act on the request for prior written consent under section 622 concurrently with its action on the request for approval or notice under the other statute.

In reviewing a proposed de minimis transaction, the Board will consider whether the consummation of the covered acquisition could pose a threat to financial stability. As noted by the Council in its study on the concentration limit, this concentration limit is intended, along with a number of other provisions in the Dodd-Frank Act, to promote financial stability and address the perception that large financial institutions are ''too big to fail.'' [35] The final rule's standard for reviewing exceptions to the concentration limit is intended to further this statutory intent. Proposed de minimis transactions may also require a separate consideration under another statute and may be subject to a denial or objection pursuant to the standards under that statute.

Commenters requested that the Board provide its general consent for transactions for which the consideration paid is $100 million or less, and for which the associated increase in liabilities is within the $2 billion *de minimis* cap, with only an after-the-fact notice. Transactions that, in aggregate, result in an increase in the total consolidated liabilities of a financial company of $100 million or less are unlikely to affect materially the concentration of the financial sector. As part of the final rule, the Board is providing general consent for transactions that result in an increase in the total consolidated liabilities of a financial company of less than $100 million, when aggregated with all other acquisitions by the company under this general consent authority during the twelve months preceding the date of the transaction. A company must provide a notice to the Board no later than 10 days after consummating the covered acquisition that describes the covered acquisition, the increase in the company's liabilities resulting from the acquisition, and the aggregate increase in the company's liabilities from acquisitions during the twelve months preceding the date of the acquisition.

2. Organic Growth

Section 622 and the implementing final rule limit growth by the largest, most interconnected financial companies through acquisitions or mergers. The proposed rule would have identified certain activities that would not be treated as a covered acquisition, including acquiring shares in the ordinary course of collecting a debt previously contracted (DPC), in a fiduciary capacity, in connection with underwriting or market making, or merchant or investment banking or insurance company investment activity. The proposed rule would have also clarified that internal corporate reorganizations were not ''covered acquisitions'' for purposes of section 622.

One commenter requested that the Board reconsider the proposed exceptions for merchant banking investments and the acquisition of DPC assets. The commenter noted that Congress enumerated specific exceptions from the statutory concentration limit, and chose not to provide an exception for merchant

[32] Council study, p. 3.

[33] 604(d) and (e) of the Dodd-Frank Act; 12 U.S.C. 1842(c)(7) and 1843(j)(2)(A).

[34] See, Capital One Financial Corporation, FRB Order No. 2012–2 (Feb. 14, 2012).

[35] Council study, p. 3.

banking investments or acquisition of DPC assets. In this commenter's view, Congress intended to enact a comprehensive limitation on growth through acquisition, and the proposed exceptions for merchant banking investments and acquisition of DPC assets would create a loophole that could undermine the intent of the statute. The commenter expressed the view that merchant banking investments and ownership of DPC assets could lead to effective ownership and control of another company.

In the alternative, the commenter recommended that the Board replace the exceptions for the acquisition of DPC assets and merchant banking investments with an actual specified time period or definition of control, which would exempt a brief ownership stake from triggering section 622's limitations on acquisitions.[36]

In light of this comment, the Board has considered the language and legislative intent of section 622, as well as the Council's study on the effects of the concentration limit. Based on these considerations, the Board is retaining the exception for acquisition of DPC assets, but eliminating the exception for merchant banking investments. The Council's study described the concentration limit as intended to promote financial stability and address the perception that large financial institutions are ''too big to fail.'' [37] In its study, the Council expressed the view that the concentration limit will reduce the risks to U.S. financial stability created by increased concentration arising from mergers, consolidations or acquisitions involving the largest U.S. financial companies.[38] It also expressed the view that the concentration limit does not prevent firms from growing larger through internal, organic growth.[39]

In the Board's view, the acquisition of an interest in a company during the regular course of securing or collecting a debt previously contracted is integral to the business of lending, and should not be constrained by the concentration limit. An acquisition of shares of a company through a DPC acquisition results from a borrower defaulting on a loan, rather than an intentional investment by a financial company. These acquisitions protect the lender from loss, and typically require a divestiture of the interests within five years.

In contrast to a DPC acquisition, engaging in a merchant banking investment that results in control of a company is an intentional investment decision by a financial company. A merchant banking investment is solely for the purpose of acquiring an interest in a nonfinancial company. As such, the Board has determined that merchant banking investments that result in control of a company should not be exempt. Merchant banking investments are fundamentally different from the situation where a company must foreclose on shares of a company held as collateral in order to recover the funds it has lent. Therefore, to the extent that a merchant banking investment gives rise to control under the Bank Holding Company Act, it will be treated as a ''covered acquisition'' for purposes of section 622. A financial company whose liabilities exceeded the concentration limit could still make merchant banking investments, provided that it did not acquire control of the portfolio company.

Other commenters suggested several additional types of transactions that should be exempt from the definition of covered acquisition because they are ordinary business transactions. Among these suggestions were the acquisition of a loan portfolio structured as an acquisition of a special purpose vehicle instead of the purchase of underlying loans, community development investments, investments in small business investment companies, leases structured as an investment in a company, the acquisition of securities in connection with customer-driven hedging positions, securities repurchase financing transactions, securities borrowing and lending transactions, and investments by funds of which a financial company subsidiary serves as a general partner.

In response to commenters' observation that the acquisition of certain assets, such as a loan portfolio, may be structured as a legal matter as an acquisition of a special purpose vehicle, the final rule would include a new exception for securitization transactions. Specifically, a ''covered acquisition'' would exclude an acquisition of ownership or control of a company that is, or will be, an issuer of asset-backed securities (as defined in section 3(a) of the Securities and Exchange Act of 1934) so long as the financial company that retains an ownership interest in the company complies with the credit risk retention requirements in the regulations issued pursuant to section 15G of the Securities and Exchange Act of 1934. The credit risk retention requirements are found in section 941 of the Dodd-Frank Act, and the exception would permit a financial company to continue sponsoring securitizations after the financial company's liabilities exceed the concentration limit, consistent with the requirements of the Dodd-Frank Act.[40]

With respect to the commenter's suggestion that the Board exempt small business and community development investments, leases structured as investments, acquisition of securities in connection with customer-driven hedging positions, investments by funds of which a financial company subsidiary serves as a general partner, securities repurchase financing transactions, and securities borrowing and lending transactions, these investments would not be prohibited under the final rule so long as they do not give rise to control over the investee company.

Commenters requested clarification of the proposed exception for fiduciary acquisitions, requesting that there be a complete, unconditional exclusion of assets acquired by a financial company acting in a fiduciary capacity. The final rule clarifies that the fiduciary exception in section 622 would permit a financial company to continue to engage in *bona fide* fiduciary activities in accordance with applicable fiduciary law. As discussed below, the final rule contains an anti-evasion provision applicable to all transactions that prohibits a financial company from organizing or operating its business or structuring any acquisition of, or merger or consolidation with, another company in such a manner that would result in evasion of application of the concentration limit.

E. Other Provisions of Law

Other provisions of the Dodd-Frank Act require the Board, in evaluating applications or notices under section 3 or 4 of the Bank Holding Company Act or under section 163 of the Dodd-Frank Act, to consider the risks to financial stability posed by a merger or acquisition by a financial company.[41] These provisions may result in more stringent limitations than the concentration limit for a particular transaction or proposal, depending on the Board's analysis of the effects of the proposal on financial stability.

[36] Specifically, the commenter requested that ''control'' be defined as either majority ownership or substantial influence over the business decisions of the company. In the alternative, the commenter suggests that the Board exempt merchant banking investments and acquisition of DPC assets only if held for less than one year.

[37] Council study, p. 10.

[38] Council study, p. 10.

[39] Council study, p. 5.

[40] Section 941 of the Dodd-Frank Act, 15 U.S.C. 78o–11.

[41] *See* sections 163, 173, and 604(d), (e) and (f) of the Dodd-Frank Act; 12 U.S.C. 1842(c), 1843(j)(2)(A), 1828(c)(5), 5363, and 5373.

Furthermore, other restrictions on acquisitions, such as the competitive restrictions contained in the Bank Holding Company Act or Federal antitrust laws, may also limit certain transactions by financial companies.[42]

III. Administrative Law Matters

A. Solicitation of Comments on the Use of Plain Language

Section 722 of the Gramm-Leach-Bliley Act (Pub. L. No. 106–102, 113 Stat. 1338, 1471, 12 U.S.C. 4809) requires the Federal banking agencies to use plain language in all proposed and final rules published after January 1, 2000. The Board received no comments on these matters and believes that the final rule is written plainly and clearly.

B. Paperwork Reduction Act Analysis

In accordance with section 3512 of the Paperwork Reduction Act of 1995 (44 U.S.C. § 3501–3521) (PRA), the Board may not conduct or sponsor, and a respondent is not required to respond to, an information collection unless it displays a currently valid Office of Management and Budget (OMB) control number. The Board will obtain an OMB control number for this information collection. The Board reviewed the final rule under the authority delegated to the Board by OMB.

The final rule contains requirements subject to the PRA. The reporting requirements are found in sections 251.4(b), 251.4(c), and 251.6. To implement the reporting requirements set forth in 251.6, the Board proposes to create a new reporting form, the Financial Company Report of Consolidated Liabilities (FR XX–1). This information collection requirement would implement section 622 of the Dodd-Frank Act.

Of the comments received on the proposed rule, four specifically referenced the PRA. In response to these comments, the Board modified the final rule as follows (1) provided that financial sector liabilities will be calculated as of December 31, 2014, for purposes of the period beginning July 1, 2015 and ending June 30, 2016, and the two-year average will be adopted for each year thereafter; (2) removed the prior notice requirement for acquisitions by financial companies with total consolidated liabilities equal to or greater than 8 percent of aggregate financial sector liabilities; (3) provided prior consent for a covered acquisition that would result in an increase in the liabilities of the financial company that does not exceed $100 million, when aggregated with all other covered acquisitions by the financial company during the twelve months preceding the consummation of the transaction and set forth a process and standard of review for de minimis transactions. These changes, as well as the Board's other responses to the comments received, are discussed in greater detail above.

Proposed Information Collection

Title of Information Collection: Reporting Requirements Associated with Regulation XX (Concentration Limit) (Reg XX); Financial Company Report of Consolidated Liabilities (FR XX–1).

Frequency of Response: Reg XX: Annual, event generated; FR XX–1: Annual.

Affected Public: Businesses or other for-profit.

Respondents: Reg XX: Insured depository institutions, bank holding companies, foreign banking organizations, savings and loan holding company, companies that control insured depository institutions, and nonbank financial companies supervised by the Board; FR XX–1: U.S. and foreign financial companies that do not otherwise report consolidated financial information to the Board or other appropriate Federal banking agency.

Abstract: Section 622 of the Dodd-Frank Wall Street Reform and Consumer Protection Act, which adds a new section 14 to the Bank Holding Company Act of 1956, as amended, establishes a financial sector concentration limit that generally prohibits a financial company from merging or consolidating with, or acquiring, another company if the resulting company's liabilities upon consummation would exceed 10 percent of the aggregate liabilities of all financial companies as calculated under that section. In addition, the rule requires certain financial companies to report information necessary to calculate the financial sector concentration limit.

Section 251.4(b) requires a financial company with liabilities in excess of the concentration limit cap to request that the Board provide prior written consent before consummates a transaction that is exempt from the concentration limit. The request for prior written consent must contain a description of the covered acquisition, the projected increase in the company's liabilities resulting from the acquisition, the projected aggregate increase in the company's liabilities from acquisitions during the twelve months preceding the projected date of the acquisition (if the request is made pursuant to paragraph (a)(3) of this section); and any additional information requested by the Board.

Section 251.4(c) requires a financial company with liabilities in excess of the concentration limit cap may provide after-the-fact notice to the Board if a covered acquisition would result in an increase in the liabilities of the financial company of less than $100 million, when aggregated with all other covered acquisitions by the financial company made pursuant to section 251.4(c) during the twelve months preceding the date of the acquisition. A financial company that relies on this provision must provide a notice to the Board within 10 days after consummating the covered acquisition that describes the covered acquisition, the increase in the company's liabilities resulting from the acquisition, and the aggregate increase in the company's liabilities from covered acquisitions during the twelve months preceding the date of the acquisition.

Section 251.6 requires financial companies that do not report consolidated financial information to the Board or other appropriate Federal banking agency to report information on their total liabilities. At present, many financial companies do not report consolidated financial information to the Board or other appropriate Federal banking agency. These institutions include savings and loan holding companies where the top-tier holding company is an insurance company that only prepares financial statements in accordance with SAP, holding companies of industrial loan companies, limited-purpose credit card bans, and limited-purpose trust banks. Because this information is necessary to implement section 622, this rule creates a new report, the Financial Company Report of Consolidated Liabilities (FR XX–1) on which a financial company that does not otherwise report consolidated financial information to the Board or other appropriate Federal banking agency would be required to report information on their total liabilities.

Because the Board is required to report a final calculation based on data collected as of the end of each calendar year, this proposed new report would be completed annually beginning with the report as of December 31, 2014. The Board will collect the first report by March 31, 2015.

Specifically, with respect to a financial company domiciled in the United States, the institution is required to report total consolidated liabilities of the financial company under applicable

[42] *See, e.g.,* 12 U.S.C. 1842(d) and 1843(j); 12 CFR 225.14(c)(5) and (6).

accounting standards.[43] With respect to a financial company domiciled in a country other than the United States, the financial company is required to report the total consolidated liabilities of the combined U.S. operations of the financial company as of December 31. ''Total consolidated liabilities of the combined U.S. operations of the financial company'' would mean the sum of the total consolidated liabilities of each top-tier U.S. subsidiary of financial company, as determined under GAAP. A parent holding company is permitted, but is not required, to reduce ''total consolidated liabilities of the combined U.S. operations of the parent holding company'' by amounts corresponding to balances and transactions between U.S. subsidiaries of the parent holding company to the extent such items would not already be eliminated in consolidation.

Information contained in this report generally will be made available to the public upon request. However, a reporting holding company may request confidential treatment for the report if the holding company is of the opinion that disclosure of specific commercial or financial information in the report would likely result in substantial harm to its competitive position, or that disclosure of the submitted information would result in unwarranted invasion of personal privacy.

Estimated Burden per Response: Reg XX: Section 251.4(b), 10 hours; Section 251.4(c), 10 hours; FR XX–1: 2 hours; one-time implementation: 5 hours.

Number of Respondents: Reg XX: Section 251.4(b), 1; Section 251.4(c), 1; FR XX–1: 40.

Total Estimated Annual Burden: Reg XX: 20 hours; FR XX–1: 80 hours; one-time implementation: 200.

C. Regulatory Flexibility Act Analysis

The Regulatory Flexibility Act, 5 U.S.C. 601 et seq. (RFA), generally requires that an agency prepare and make available for public comment an initial regulatory flexibility analysis in connection with a notice of proposed rulemaking.[44] The regulatory flexibility analysis otherwise required under section 604 of the RFA is not required if an agency certifies that the rule will not have a significant economic impact on a substantial number of small entities and publishes its certification and a short, explanatory statement in the **Federal Register** along with its rule.

The agencies solicited public comment on the rule in a notice of proposed rulemaking. The agencies did not receive any comments regarding burden to small banking organizations.

The Board adding Regulation XX (12 CFR 251 *et seq.*) to implement section 14 of the Bank Holding Company Act (added by section 622 of the Dodd-Frank Act), reflecting the recommendations of the Council.[45] Section 622 establishes a financial sector concentration limit that generally prohibits a financial company from merging or consolidating with, or acquiring, another company if the resulting company's liabilities upon consummation would exceed 10 percent of the aggregate liabilities of all financial companies as calculated under that section.

Under regulations issued by the Small Business Administration (SBA), a ''small entity'' includes those firms within the ''Finance and Insurance'' sector with asset sizes that vary from $35.5 million or less in assets to $550 million or less in assets.[46] The Finance and Insurance sector constitutes a reasonable universe of firms for these purposes because such firms generally engage in actives that are financial in nature. Consequently, bank holding companies or nonbank financial companies with assets sizes of $550 million or less are small entities for purposes of the RFA.

As discussed in the Supplementary Information, the final rule prohibits a financial company from merging or consolidating with, or acquiring, another company if the resulting company's liabilities upon consummation would exceed 10 percent of the aggregate liabilities of all financial companies as calculated under that section, unless the transaction would qualify for an exception to the prohibition. For instance, transactions that involve only a *de minimis* increase in the liabilities of a financial company would not be subject to the concentration limit. A *de minimis* increase would be defined as an increase of $2 billion, when aggregated with all other acquisitions by the company under the *de minimis* authority during the twelve months preceding the date of the acquisition.

A company with $550 million or less in assets will not, in practice, be affected by the final rule, which limits covered acquisitions only by firms whose liabilities will exceed ten percent of the aggregate financial sector liabilities. As noted in the preamble to the proposed rule, as of December 31, 2013, under the estimated proposed method, financial sector liabilities is approximately $18 trillion. Furthermore, the reporting requirement for financial companies that do not otherwise report consolidated financial information to the Board or other appropriate Federal banking agency is anticipated to result in an aggregate annual burden of only 25 hours.

As noted above, because the rule is not likely to apply to any company with assets of $550 million or less, it is not expected to apply to any small entity for purposes of the RFA. The Board does not believe that the rule duplicates, overlaps, or conflicts with any other Federal rules. In light of the foregoing, the Board does not believe that the rule would have a significant economic impact on a substantial number of small entities supervised.

List of Subjects in 12 CFR Part 251

Administrative practice and procedure, Banks, Banking, Concentration Limit, Federal Reserve System, Holding companies, Reporting and recordkeeping requirements, Securities.

Authority and Issuance

For the reasons stated in the Supplementary Information, the Board of Governors of the Federal Reserve System is adding part 251 to read as follows:

PART 251—CONCENTRATION LIMIT (REGULATION XX)

Sec.
251.1 Authority, purpose, and other authorities.
251.2 Definitions.
251.3 Concentration limit.
251.4 Exceptions to the concentration limit.
251.5 No evasion.
251.6 Reporting requirements.

Authority: 12 U.S.C. 1818, 1844(b), 1852, 3101 et seq.

§ 251.1 Authority, purpose, and other authorities.

(a) *Authority.* This part is issued by the Board of Governors of the Federal Reserve System under sections 5 and 14 of the Bank Holding Company Act of 1956, as amended (12 U.S.C. 1844 and

[43] ''Applicable accounting standards'' are defined for purposes of the proposed rule as GAAP, or such other accounting standards applicable to the company that the Board determines are appropriate. If a company does not calculate its total consolidated assets or liabilities under GAAP for any regulatory purpose (including compliance with applicable securities laws), the company may submit a request to the Board that it use an accounting standard or method of estimation other than GAAP to calculate its liabilities for purposes of this subpart. The Board may, in its discretion and subject to Board review and adjustment, permit the company to provide estimated total consolidated liabilities on an annual basis using this accounting standard or method of estimation.

[44] *See* 5 U.S.C. 603(a).

[45] *See* 12 U.S.C. 5365 and 5366.

[46] 13 CFR 121.201.

1852); section 8 of the Federal Deposit Insurance Act, as amended (12 U.S.C. 1818); the International Banking Act of 1978, as amended (12 U.S.C. 3101 et seq.); and the recommendations of the Financial Stability Oversight Council (76 **Federal Register** 6756) (February 8, 2011).

(b) *Purpose.* This subpart implements section 14 of the Bank Holding Company Act, which generally prohibits a financial company from merging or consolidating with, acquiring all or substantially all of the assets of, or otherwise acquiring control of, another company if the resulting company's consolidated liabilities would exceed 10 percent of the aggregate consolidated liabilities of all financial companies.

(c) *Other authorities.* Nothing in this part limits the authority of the Board under any other provision of law or regulation to prohibit or limit a financial company from merging or consolidating with, acquiring all or substantially all of the assets of, or otherwise acquiring control of, another company.

§ 251.2 Definitions.

Unless otherwise specified, for the purposes of this part:

(a) *Applicable accounting standards* means, with respect to a company, U.S. generally accepted accounting principles (GAAP), or such other accounting standard or method of estimation that the Board determines is appropriate pursuant to § 251.3(e).

(b) *Applicable risk-based capital rules* means consolidated risk-based capital rules established by an appropriate Federal banking agency that are applicable to a financial company.

(c) *Appropriate Federal banking agency* has the same meaning as in section 3(q) of the Federal Deposit Insurance Act (12 U.S.C. 1813(q)).

(d) *Control* has the same meaning as in § 225.2(e) of the Board's Regulation Y (12 CFR 225.2(e)).

(e) *Council* means the Financial Stability Oversight Council established by section 111 of the Dodd-Frank Act (12 U.S.C. 5321).

(f) *Covered acquisition* means a transaction in which a company directly or indirectly merges or consolidates with, acquires all or substantially all of the assets of, or otherwise acquires control of another company. A covered acquisition does not include an acquisition of ownership or control of a company:

(1) In the ordinary course of collecting a debt previously contracted in good faith if the acquired securities or assets are divested within the time period permitted by the appropriate Federal banking agency (including extensions) or, if the financial company does not have an appropriate Federal banking agency, five years;

(2) In a fiduciary capacity in good faith under applicable fiduciary law if the acquired securities or assets are held in the ordinary course of business and not acquired for the benefit of the company or its shareholders, employees, or subsidiaries;

(3) In connection with *bona fide* underwriting or market-making activities;

(4) Solely in connection with a corporate reorganization and the companies involved are lawfully controlled and operated by the financial company both before and following the reorganization; and

(5) That is, or will be, an issuer of asset back securities (as defined in Section 3(a) of the Securities and Exchange Act of 1934) so long as the financial company that retains an ownership interest in the company complies with the credit risk retention requirements in the regulations issued pursuant to section 15G of the Securities and Exchange Act of 1934.

(g) *Financial company* includes:

(1) An insured depository institution;

(2) A bank holding company;

(3) A savings and loan holding company;

(4) A company that controls an insured depository institution;

(5) A nonbank financial company supervised by the Board, and

(6) A foreign bank or company that is treated as a bank holding company for purposes of the Bank Holding Company Act.

(h) *Foreign financial company* means a financial company that is incorporated or organized in a country other than the United States.

(i) *Insured depository institution* has the same meaning as in section 3(c)(2) of the Federal Deposit Insurance Act (12 U.S.C. 1813(c)(2)).

(j) *Nonbank financial company supervised by the Board* means any nonbank financial company that the Council has determined under section 113 of the Dodd-Frank Act (12 U.S.C. 5323) shall be supervised by the Board and for which such determination is still in effect.

(k) *State* means any state, commonwealth, territory, or possession of the United States, the District of Columbia, the Commonwealth of Puerto Rico, the Commonwealth of the Northern Mariana Islands, American Samoa, Guam, or the United States Virgin Islands.

(l) *U.S. agency* has the same meaning as the term ''agency'' in § 211.21(b) of the Board's Regulation K (12 CFR 211.21(b)).

(m) *Total regulatory capital* has the same meaning as the term ''total capital'' as defined under the applicable risk-based capital rules.

(n) *Total risk-based capital ratio* means the ''total capital ratio'' as calculated under the applicable risk-based capital rules.

(o) *Total risk-weighted assets* means the measure of consolidated risk-weighted assets that a financial company uses to calculate its risk-based capital ratios under the applicable risk-based capital rules.

(p) *U.S. branch* has the same meaning as the term ''branch'' in § 211.21(e) of the Board's Regulation K (12 CFR 211.21(e)).

(q) *U.S. company* means a company that is incorporated in or organized under the laws of the United States or any State.

(r) *U.S. financial company* means a financial company that is a U.S. company.

(s) *U.S. subsidiary* means any subsidiary, as defined in § 225.2(o) of Regulation Y (12 CFR 225.2(o)), that is a U.S. company.

§ 251.3 Concentration limit.

(a) *In general.* (1) Except as otherwise provided in § 251.4, a company may not consummate a covered acquisition if upon consummation of the transaction, the liabilities of the resulting company would exceed 10 percent of the financial sector liabilities, and the company is or would become a financial company.

(2) *Financial sector liabilities.* (i) Subject to paragraph (a)(2)(ii) of this section, as of July 1 of a given year, financial sector liabilities are equal to the average of the year-end financial sector liabilities figure for the preceding two calendar years. The measure of financial sector liabilities will be in effect until June 30 of the following calendar year.

(ii) For the period beginning July 1, 2015, and ending June 30, 2016, financial sector liabilities are equal to the year-end financial sector liabilities figure as of December 31, 2014.

(iii) The year-end financial sector liabilities figure equals the sum of the total consolidated liabilities of all top-tier U.S. financial companies (as calculated under paragraph (b) of this section) and the U.S. liabilities of all top-tier foreign financial companies (as calculated under paragraph (c) of this section) as of December 31 of that year.

(iv) On an annual basis and no later than July 1 of any calendar year, the Board will calculate and publish the financial sector liabilities for the preceding calendar year and the average

of the financial sector liabilities for the preceding two calendar years.

(b) *Calculating total consolidated liabilities.* For purposes of paragraph (a) of this section:

(1) *Covered acquisition by a U.S. company.* For a covered acquisition in which a U.S. company would acquire a U.S. company or a foreign company, liabilities of the resulting U.S. financial company equal the consolidated liabilities of the resulting U.S. financial company, calculated on a pro forma basis in accordance with paragraph (c) of this section.

(2) *Covered acquisition by a foreign company of another foreign company.* For a covered acquisition in which a foreign company would acquire another foreign company, liabilities of the resulting foreign financial company equal the U.S. liabilities of the resulting financial company, calculated on a pro forma basis in accordance with paragraph (d) of this section.

(3*) Covered acquisition by a foreign company of a U.S. company.* For a covered acquisition in which a foreign company would acquire a U.S. company, liabilities of the resulting foreign financial company equal the sum of: (i) The U.S. liabilities of the foreign company immediately preceding the transaction (calculated in accordance with paragraph (d) of this section) and (ii) the consolidated liabilities of the U.S. company immediately preceding the transaction (calculated in accordance with paragraph (c) of this section), reduced by the amount corresponding to any balances and transactions that would be eliminated in consolidation upon consummation of the transaction.

(c) *Liabilities of a U.S. company*—(1) *U.S. company subject to applicable risk-based capital rules.* For a U.S. company subject to applicable-risk based capital rules, consolidated liabilities are equal to:

(i) Total risk-weighted assets of the company; plus

(ii) The amount of assets that are deducted from the company's regulatory capital elements under the applicable risk-based capital rules, times a multiplier that is equal to the inverse of the company's total risk-based capital ratio minus one; minus

(iii) Total regulatory capital of the company.

(2) *U.S. company not subject to applicable risk-based capital rules.* For a U.S. company that is not subject to applicable risk-based capital rules, consolidated liabilities are equal to the total liabilities of such company on a consolidated basis, as determined under applicable accounting standards.

(d) *Liabilities of a foreign company*—(1) *Foreign banking organization.* For a foreign banking organization, U.S. liabilities are equal to:

(i) The total consolidated assets of each U.S. branch or U.S. agency of the foreign banking organization, calculated in accordance with applicable accounting standards; plus

(ii) The total consolidated liabilities of each top-tier U.S. subsidiary that is subject to applicable risk-based capital rules (or reports information to the Board regarding its capital under risk-based capital rules applicable to bank holding companies), calculated as:

(A) Total consolidated risk-weighted assets of the subsidiary; plus

(B) The amount of assets that are deducted from the subsidiary's regulatory capital elements under the applicable risk-based capital rules, times a multiplier that is equal to the inverse of the subsidiary's total risk-based capital ratio minus one; minus

(C) Total consolidated regulatory capital of the subsidiary; plus

(iii) The total consolidated assets of each top-tier U.S. subsidiary that is not subject to applicable risk-based capital rules and does not report information regarding its capital under risk-based capital rules applicable to bank holding companies, calculated in accordance with applicable accounting standards.

(2) *Foreign financial company that is not a foreign banking organization.* For a foreign company that is not a foreign banking organization, U.S. liabilities are equal to:

(i) The total consolidated liabilities of each top-tier U.S. subsidiary that is subject to applicable risk-based capital rules (or reports information to the Board regarding its capital under risk-based capital rules applicable to bank holding companies), calculated as:

(A) Total consolidated risk-weighted assets of the subsidiary; plus

(B) The amount of assets that are deducted from the subsidiary's regulatory capital elements under the applicable risk-based capital rules, times a multiplier that is equal to the inverse of the company's total risk-based capital ratio minus one; minus

(C) Total regulatory capital of the subsidiary; plus

(ii) The total consolidated liabilities of each top-tier U.S. subsidiary that is not subject to applicable risk-based capital rules, calculated in accordance with applicable accounting standards.

(3) *Intercompany balances and transactions*—(i) *Foreign banking organization.* A foreign banking organization must reduce the amount of consolidated liabilities of its U.S. operations calculated pursuant to this paragraph (d) by amounts corresponding to intercompany balances and intercompany transactions between the foreign banking organization's U.S. domiciled affiliates, branches or agencies to the extent such items are not eliminated in consolidation, and increase consolidated liabilities by net intercompany balances and intercompany transactions between a non-U.S. domiciled affiliate and a U.S. domiciled affiliate, branch, or agency of the foreign banking organization, to the extent such items are not reflected in the measure of liabilities.

(ii) *Foreign financial company.* A foreign company that is not a foreign banking organization may reduce the amount of consolidated liabilities of its U.S. operations calculated pursuant to this paragraph (d) by amounts corresponding to intercompany balances and intercompany transactions between the foreign organization's U.S. domiciled affiliates to the extent such items are not already eliminated in consolidation; provided that it increases consolidated liabilities by net intercompany balances and intercompany transactions between a non-U.S. domiciled affiliate and a U.S. domiciled affiliate, to the extent such items are not already reflected in the measure of liabilities.

(e) *Applicable accounting standard.* If a company does not calculate its total consolidated assets or liabilities under GAAP for any regulatory purpose (including compliance with applicable securities laws), the company may submit a request to the Board that the company use an accounting standard or method of estimation other than GAAP to calculate its liabilities for purposes of this part. The Board may, in its discretion and subject to Board review and adjustment, permit the company to provide estimated total consolidated liabilities on an annual basis using this accounting standard or method of estimation.

§ 251.4 Exceptions to the concentration limit.

(a) *General.* With the prior written consent of the Board, the concentration limit under § 251.3 shall not apply to:

(1) A covered acquisition of an insured depository institution that is in default or in danger of default (as determined by the appropriate Federal banking agency of the insured depository institution, in consultation with the Board);

(2) A covered acquisition with respect to which assistance is provided by the Federal Deposit Insurance Corporation under section 13(c) of the Federal

Deposit Insurance Act (12 U.S.C. 1823(c)); or

(3) A covered acquisition that would result in an increase in the liabilities of the financial company that does not exceed $2 billion, when aggregated with all other acquisitions by the financial company made pursuant to this paragraph (a)(3) during the twelve months preceding the projected date of the acquisition.

(b) *Prior written consent*—(1) *General.* Except as provided in paragraph (c) of this section, a financial company must request that the Board provide prior written consent before the financial company consummates a transaction described in paragraph (a) of this section.

(2) *Contents of request.* (i) A request for prior written consent under paragraph (a) of this section must contain:

(A) A description of the covered acquisition;

(B) The projected increase in the company's liabilities resulting from the acquisition;

(C) If the request is made pursuant to paragraph (a)(3) of this section, the projected aggregate increase in the company's liabilities from acquisitions during the twelve months preceding the projected date of the acquisition; and

(D) Any additional information requested by the Board.

(ii) A financial company may satisfy the requirements of this paragraph (b) if:

(A) The proposed transaction otherwise requires approval by, or prior notice to, the Board under the Change in Bank Control Act, Bank Holding Company Act, Home Owners' Loan Act, International Banking Act, or any other applicable statute, and any regulation thereunder; and

(B) The financial company includes the information required in paragraph (b)(2) of this section in the notice or request for prior approval described in paragraph (b)(2)(ii)(A) of this section.

(3) *Procedures for providing written consent.* (i) The Board will act on a request for prior written consent filed under this paragraph (b) within 90 calendar days after the receipt of a complete request, unless that time period is extended by the Board. To the extent that a proposed transaction otherwise requires approval from, or prior notice to, the Board under another provision of law, the Board will act on that request for prior written consent concurrently with its action on the request for approval or notice.

(ii) In acting on a request under this paragraph (b), the Board will consider whether the consummation of the covered acquisition could pose a threat to financial stability.

(c) *General consent.* The Board grants prior written consent for a covered acquisition that would result in an increase in the liabilities of the financial company that does not exceed $100 million, when aggregated with all other covered acquisitions by the financial company made pursuant to this paragraph (c) during the twelve months preceding the date of the acquisition. A financial company that relies on prior written consent pursuant to this paragraph (c) must provide a notice to the Board within 10 days after consummating the covered acquisition that describes the covered acquisition, the increase in the company's liabilities resulting from the acquisition, and the aggregate increase in the company's liabilities from covered acquisitions during the twelve months preceding the date of the acquisition.

§ 251.5 No evasion.

A financial company may not organize or operate its business or structure any acquisition of or merger or consolidation with another company in such a manner that results in evasion of the concentration limit established by section 14 of the Bank Holding Company Act or this part.

§ 251.6 Reporting requirements.

By March 31 of each year:

(a) A U.S. financial company (other than a U.S. financial company that is required to file the Bank Consolidated Reports of Condition and Income (Call Report), the Consolidated Financial Statements for Holding Companies (FR Y–9C), the Parent Company Only Financial Statements for Small Holding Companies (FR Y–9SP), or the Parent Company Only Financial Statements for Large Holding Companies (FR Y–9LP), or is required to report consolidated total liabilities on the Quarterly Savings and Loan Holding Company Report (FR 2320)) must report to the Board its consolidated liabilities as of the previous calendar year-end in the manner and form prescribed by the Board; and

(b) A foreign financial company (other than a foreign financial company that is required to file a FR Y–7) must report to the Board its U.S. liabilities as of the previous calendar year-end in the manner and form prescribed by the Board.

By order of the Board of Governors of the Federal Reserve System, November 4, 2014.

Robert deV. Frierson,

Secretary of the Board.

[FR Doc. 2014–26747 Filed 11–13–14; 8:45 am]

BILLING CODE 6210–01–P

DEPARTMENT OF TRANSPORTATION

Federal Aviation Administration

14 CFR Part 25

[Docket No. FAA–2014–0564; Special Conditions No. 25–XXX–SC]

Special Conditions: Dassault Model Falcon 900EX Airplane; Electronic System-Security Protection From Unauthorized External Access

AGENCY: Federal Aviation Administration (FAA), DOT.

ACTION: Final special conditions, request for comments.

SUMMARY: These special conditions are issued for Dassault Model Falcon 900EX airplanes. These airplanes will have a novel or unusual design feature associated with electronic system-security protection from unauthorized external access. The applicable airworthiness regulations do not contain adequate or appropriate safety standards for this design feature. These special conditions contain the additional safety standards that the Administrator considers necessary to establish a level of safety equivalent to that established by the existing airworthiness standards.

DATES: Effective December 15, 2014.

FOR FURTHER INFORMATION CONTACT: Varun Khanna, FAA, Airplane and Flightcrew Interface Branch, ANM–111, Transport Airplane Directorate, Aircraft Certification Service, 1601 Lind Avenue SW., Renton, Washington, 98057–3356; telephone (425) 227–1298; facsimile (425) 227–1320.

SUPPLEMENTARY INFORMATION:

Background

On March 20, 2013, Dassault Aircraft Services applied for a type certificate for their new Model 900EX airplane.

The Dassault Falcon 900EX is a business jet with seating for up to 19 passengers. Three Allied Signal TFE 731–60–1C engines power the airplane, which has a maximum takeoff weight of 49,000 pounds.

Contemporary transport-category airplanes have both safety-related and non-safety-related electronic system networks for many operational functions. However, electronic system-network-security considerations and functions have played a relatively minor role in the certification of such systems because of the isolation, protection mechanisms, and limited connectivity between the different networks.

Comments Invited

We invite interested people to take part in this rulemaking by sending

written comments, data, or views. The most helpful comments reference a specific portion of the special conditions, explain the reason for any recommended change, and include supporting data.

We will consider all comments we receive by the closing date for comments. We may change these special conditions based on the comments we receive.

Type Certification Basis

Under Title 14, Code of Federal Regulations (14 CFR) 21.17, Dassault must show that the Model Falcon 900EX airplane meets the applicable provisions of 14 CFR part 25, as amended by Amendments 25–1 through 25–129.

If the Administrator finds that the applicable airworthiness regulations (i.e., 14 CFR part 25) do not contain adequate or appropriate safety standards for the Model Falcon 900EX airplane because of a novel or unusual design feature, special conditions are prescribed under § 21.16.

Special conditions are initially applicable to the model for which they are issued. Should the type certificate for that model be amended later to include any other model that incorporates the same novel or unusual design feature, the special conditions would also apply to the other model under § 21.101.

In addition to the applicable airworthiness regulations and special conditions, the Model Falcon 900EX airplane must comply with the fuel-vent and exhaust-emission requirements of 14 CFR part 34, and the noise-certification requirements of 14 CFR part 36. The FAA must issue a finding of regulatory adequacy under section 611 of Public Law 92–574, the ''Noise Control Act of 1972.''

The FAA issues special conditions, as defined in 14 CFR 11.19, under § 11.38, and they become part of the type-certification basis under § 21.17(a)(2).

Novel or Unusual Design Features

The Dassault Model Falcon 900EX airplane will incorporate the following novel or unusual design feature:

The digital systems architecture for the Dassault Model Falcon 900EX airplane is composed of several connected networks. This network architecture is used for a diverse set of functions, providing data connectivity between systems, including:

1. Airplane control, communication, display, monitoring and navigation systems,

2. Operator business and administrative support systems,

3. Passenger entertainment systems, and

4. Access by systems external to the airplane.

Discussion

The Dassault Model Falcon 900EX airplane network architecture and configuration may allow increased connectivity to, and access from, external network sources, and operator operations and maintenance networks to the airplane control domain and operator-information-services domain. The airplane-control domain and operator-information-services domain perform functions required for the safe operation and maintenance of the airplane. Previously, these domains had very limited connectivity with external network sources. The network architecture and configuration may allow the exploitation of network-security vulnerabilities resulting in intentional or unintentional destruction, disruption, degradation, or exploitation of data, systems, and networks critical to the safety and maintenance of the airplane.

The existing regulations and guidance material did not anticipate these types of airplane system architectures. Furthermore, 14 CFR regulations and current system-safety assessment policy and techniques do not address potential security vulnerabilities, which could be exploited by unauthorized access to airplane networks, data buses, and servers. Therefore, these special conditions are to ensure that unauthorized wired or wireless electronic connections do not compromise the security (i.e., confidentiality, integrity, and availability) of airplane systems.

These special conditions contain the additional safety standards that the Administrator considers necessary to establish a level of safety equivalent to that established by the existing airworthiness standards.

Applicability

As discussed above, these special conditions apply to the Dassault Model Falcon 900EX airplane. Should Dassault apply later for a change to the type certificate to include another model incorporating the same novel or unusual design feature, the special conditions would apply to that model as well.

Conclusion

This action affects only certain novel or unusual design features on the Dassault Model Falcon 900EX airplane. It is not a rule of general applicability.

List of Subjects in 14 CFR Part 25

Aircraft, Aviation safety, Reporting and recordkeeping requirements.

The authority citation for these special conditions is as follows:

Authority: 49 U.S.C. 106(g), 40113, 44701, 44702, 44704.

The Special Conditions

Accordingly, pursuant to the authority delegated to me by the Administrator, the following special conditions are issued as part of the type-certification basis for Dassault Model Falcon 900EX airplanes.

1. The applicant must ensure airplane electronic system-security protection from access by unauthorized sources external to the airplane, including those possibly caused by maintenance activity.

2. The applicant must ensure that electronic system-security threats are identified and assessed, and that effective electronic system-security protection strategies are implemented to protect the airplane from all adverse impacts on safety, functionality, and continued airworthiness.

3. The applicant must establish appropriate procedures to allow the operator to ensure that continued airworthiness of the airplane is maintained, including all post-type-certification modifications that may have an impact on the approved electronic system-security safeguards.

Issued in Renton, Washington, on November 5, 2014.

Jeffrey E. Duven,

Manager, Transport Airplane Directorate, Aircraft Certification Service.

[FR Doc. 2014–26819 Filed 11–13–14; 8:45 am]

BILLING CODE 4910–13–P

DEPARTMENT OF TRANSPORTATION

Federal Aviation Administration

14 CFR Part 39

[Docket No. FAA–2014–0337; Directorate Identifier 2013–SW–029–AD; Amendment 39–18008; AD 2014–22–03]

RIN 2120–AA64

Airworthiness Directives; Various Restricted Category Helicopters

AGENCY: Federal Aviation Administration (FAA), DOT.

ACTION: Final rule.

SUMMARY: We are superseding Airworthiness Directive (AD) 2012–14–11 for Arrow Falcon Exporters, Inc. (AFE), Rotorcraft Development

Corporation (RDC), and San Joaquin Helicopters (SJH) Model OH–58A, OH–58A+, and OH–58C helicopters. AD 2012–14–11 required inspecting the main rotor mast (mast) for a crack. This new AD expands the mast inspection area, changes the inspection to a repetitive inspection, and removes the reporting requirement. The actions in this AD are intended to prevent failure of the mast and subsequent loss of control of the helicopter.

DATES: This AD is effective December 19, 2014.

ADDRESSES: For Arrow Falcon Exporters, Inc. service information identified in this AD, contact Arrow Falcon Exporters, Inc., 2081 South Wildcat Way, Porterville, CA 93257; telephone (559) 781–8604; fax (559) 781–9271; email *afe@arrowfalcon.com.*

For Rotorcraft Development Corporation service information, contact Rotorcraft Development Corporation, PO Box 430, 1004 Eastside Highway, Corvallis, MT 59828; telephone (406) 961–4100; fax (406) 961–4101; or at *http://www.rotorcraftdevelopment.com.*

For United States Army service information, contact Commander, U. S. Army Aviation and Missile Command, ATTN: AMSAM–MMA–NP, Redstone Arsenal, AL 35898–5000, telephone (256) 876–4044; or at *https://www.logsa.army.mil/etmpdf/files/030000/035016.pdf.*

You may view this referenced service information at the FAA, Office of the Regional Counsel, Southwest Region, 2601 Meacham Blvd., Room 663, Fort Worth, Texas 76137.

Examining the AD Docket

You may examine the AD docket on the Internet at *http://www.regulations.gov in* Docket No. FAA–2014–0337; or in person at the Docket Management Facility between 9 a.m. and 5 p.m., Monday through Friday, except Federal holidays. The AD docket contains this AD, the economic evaluation, any comments received, and other information. The address for the Docket Office (phone: 800–647–5527) is Document Management Facility, U.S. Department of Transportation, Docket Operations, M–30, West Building Ground Floor, Room W12–140, 1200 New Jersey Avenue SE., Washington, DC 20590.

FOR FURTHER INFORMATION CONTACT: John Cecil, Aviation Safety Engineer, Los Angeles Aircraft Certification Office, Transport Airplane Directorate, FAA, 3960 Paramount Blvd., Lakewood, CA 90712; telephone (562) 627–5228; email *john.cecil@faa.gov;* or Roger Caldwell, Aerospace Engineer, Denver Aircraft Certification Office, FAA, 26805 East 68th Ave., Room 214, Denver, CO 80249; telephone (303) 342–1086; email *roger.caldwell@faa.gov.*

SUPPLEMENTARY INFORMATION:

Discussion

We issued a notice of proposed rulemaking (NPRM) to amend 14 CFR part 39 to remove AD 2012–14–11, Amendment 39–17125 (77 FR 42971, July 23, 2012) and add a new AD. AD 2012–14–11 applied to AFE, RDC, and SJH Model OH–58A, OH–58A+, and OH–58C helicopters and required overhauling the mast and performing magnetic particle, fluorescent penetrant, and visual inspections for a crack, pitting, or corrosion in the threaded area of the mast and associated parts. AD 2012–14–11 also required replacing the mast and reporting the results of the inspections if any crack, pitting, or corrosion was found. AD 2012–14–11 was prompted by two mast failures caused by fatigue cracking and was intended to prevent failure of the mast and subsequent loss of control of the helicopter.

The NPRM published in the **Federal Register** on June 2, 2014 (79 FR 31233) and proposed retaining the mast inspection and overhaul requirements of AD 2012–14–11, while changing the compliance time for the inspection from within 30 days to within 90 days, repeating the inspection every 1,200 hours TIS or 3 years, expanding the inspection area, and removing the reporting requirement.

Comments

We gave the public the opportunity to participate in developing this AD, but we did not receive any comments on the NPRM (79 FR 31233, June 2, 2014).

FAA's Determination

We have reviewed the relevant information and determined that an unsafe condition exists and is likely to exist or develop on other helicopters of these same type designs and that air safety and the public interest require adopting the AD requirements as proposed.

Related Service Information

AFE issued Alert Service Bulletin (ASB): 2012–58–01, Revision 1, dated February 20, 2012 (ASB 2012–58–01), which specifies overhauling and inspecting the mast for any cracks, pitting, or corrosion by following the procedures in the United States Army Aviation Unit and Intermediate Maintenance Manual TM55–1520–228–23. ASB 2012–58–01 further specifies replacing any mast with a crack, pitting, or corrosion beyond surface rust that is removed with a wire brush or steel wool in the threaded portion of the mast.

RDC has issued ASB No. OH–58–13–01, dated January 30, 2013, which describes additional procedures for inspecting the mast and establishes an overhaul interval of 1,200 hours TIS or 3 years, whichever occurs first.

Differences Between This AD and the Service Information

The service information does not apply to SJH helicopters. Those helicopters are included in this AD because they have the same mast design and are operated similarly to the AFE and RDC fleets.

Costs of Compliance

We estimate that this AD affects 80 helicopters of U.S. Registry and that operators will incur the following costs in order to comply with this AD. At an average labor rate of $85 per hour, inspecting the mast requires about 20 work hours, for a total cost of $1,700 per helicopter, and a total cost to the U.S. operator fleet of $136,000. Replacing a cracked main rotor mast requires about 20 work hours, and required parts cost $11,891, for a total cost per helicopter of $13,591.

Authority for This Rulemaking

Title 49 of the United States Code specifies the FAA's authority to issue rules on aviation safety. Subtitle I, Section 106, describes the authority of the FAA Administrator. Subtitle VII, Aviation Programs, describes in more detail the scope of the Agency's authority.

We are issuing this rulemaking under the authority described in Subtitle VII, Part A, Subpart III, Section 44701, ''General requirements.'' Under that section, Congress charges the FAA with promoting safe flight of civil aircraft in air commerce by prescribing regulations for practices, methods, and procedures the Administrator finds necessary for safety in air commerce. This regulation is within the scope of that authority because it addresses an unsafe condition that is likely to exist or develop on products identified in this rulemaking action.

Regulatory Findings

We have determined that this AD will not have federalism implications under Executive Order 13132. This AD will not have a substantial direct effect on the States, on the relationship between the national government and the States, or on the distribution of power and responsibilities among the various levels of government.

For the reasons discussed above, I certify that this AD:

(1) Is not a ''significant regulatory action'' under Executive Order 12866,

(2) Is not a ''significant rule'' under DOT Regulatory Policies and Procedures (44 FR 11034, February 26, 1979),

(3) Will not affect intrastate aviation in Alaska to the extent that a regulatory distinction is required, and

(4) Will not have a significant economic impact, positive or negative, on a substantial number of small entities under the criteria of the Regulatory Flexibility Act.

List of Subjects in 14 CFR Part 39

Air transportation, Aircraft, Aviation safety, Incorporation by reference, Safety.

Adoption of the Amendment

Accordingly, under the authority delegated to me by the Administrator, the FAA amends 14 CFR part 39 as follows:

PART 39—AIRWORTHINESS DIRECTIVES

■ 1. The authority citation for part 39 continues to read as follows:

Authority: 49 U.S.C. 106(g), 40113, 44701.

§ 39.13 [Amended]

■ 2. The FAA amends § 39.13 by removing Airworthiness Directive (AD) 2012–14–11, Amendment 39–17125 (77 FR 42971, July 23, 2012), and adding the following new AD:

2014–22–03 Various Restricted Category Helicopters: Amendment 39–18008; Docket No. FAA–2014–0337; Directorate Identifier 2014–SW–029–AD.

(a) Applicability

This AD applies to Arrow Falcon Exporters, Inc. (AFE), Rotorcraft Development Corporation (RDC) (formerly Garlick Helicopter Corporation, and Garlick Helicopter, Inc.), and San Joaquin Helicopters (SJH) Model OH–58A, OH–58A+, and OH–58C helicopters, certificated in any category.

(b) Unsafe Condition

This AD defines the unsafe condition as a crack in the main rotor mast, which could result in failure of the mast and subsequent loss of control of the helicopter.

(c) Affected AD

This AD supersedes AD 2012–14–11, Amendment 39–17125 (77 FR 42971, July 23, 2012).

(d) Effective Date

This AD becomes effective December 19, 2014.

(e) Compliance

You are responsible for performing each action required by this AD within the specified compliance time unless it has already been accomplished prior to that time.

(f) Required Actions

(1) Within 90 days, unless accomplished previously within the last 12 months, and thereafter at intervals not exceeding 1,200 hours time-in-service or 3 years, whichever occurs earlier:

(i) Remove any surface rust with a wire brush or steel wool and, using a 10X or higher power magnifying glass, inspect the areas of the mast as shown in area E and area J of Figure 1 to Paragraph (f) of this AD for pitting, corrosion, or a crack.

(ii) Overhaul the main rotor mast assembly and magnetic particle inspect the mast; mast bearing nut; plate, mast and seal; and bearing liner for a crack.

(iii) Fluorescent penetrant inspect the locking plate for a crack.

Figure 1 to Paragraph (f)

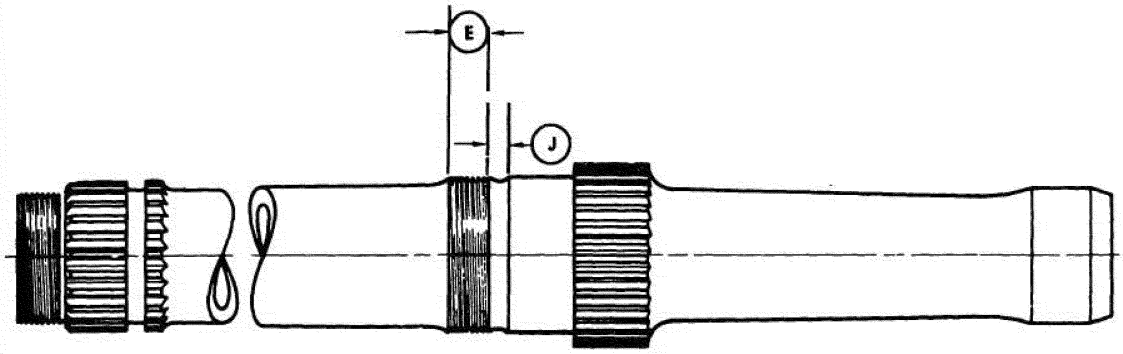

(2) If there is a crack, pitting, or corrosion, before further flight, replace the mast with an airworthy mast.

(g) Alternative Methods of Compliance (AMOCs)

(1) For AFE and SJH helicopters, the Manager, Los Angeles Aircraft Certification Office, FAA, may approve AMOCs for this AD. Send your proposal to: John Cecil, Aviation Safety Engineer, Los Angeles Aircraft Certification Office, Transport Airplane Directorate, FAA, 3960 Paramount Blvd., Lakewood, CA 90712; telephone (562) 627–5228; email *john.cecil@faa.gov.*

(2) For RDC helicopters, the Manager, Denver Aircraft Certification Office, FAA, may approve AMOCs for this AD. Send your proposal to: Roger Caldwell, Aerospace Engineer, Denver Aircraft Certification Office, FAA, 26805 East 68th Ave., Room 214, Denver, CO 80249; telephone (303) 342–1086; email *roger.caldwell@faa.gov.*

(3) For operations conducted under a 14 CFR part 119 operating certificate or under 14 CFR part 91, subpart K, we suggest that you notify your principal inspector, or lacking a principal inspector, the manager of the local flight standards district office or certificate holding district office before

operating any aircraft complying with this AD through an AMOC.

(h) Additional Information

(1) Arrow Falcon Exporters, Inc., Alert Service Bulletin: 2012–58–01, Revision 1, dated February 20, 2012, which is not incorporated by reference, contains more information about the subject of this AD. For Arrow Falcon Exporters, Inc. service information identified in this AD, contact Arrow Falcon Exporters, Inc., 2081 South Wildcat Way, Porterville, CA 93257; telephone (559) 781–8604; fax (559) 781–9271; email *afe@arrowfalcon.com.*

(2) Rotorcraft Development Corporation Alert Service Bulletin No. OH58–13–01, dated January 30, 2013, which is not incorporated by reference, contains more information about the subject of this AD. For Rotorcraft Development Corporation service information, contact Rotorcraft Development Corporation, PO Box 430, 1004 Eastside Highway, Corvallis, MT 59828; telephone (406) 961–4100; fax (406) 961–4101; or at *http://www.rotorcraftdevelopment.com.*

(3) United States Army Technical Manual Aviation Unit and Intermediate Maintenance Manual Army Model OH–58A and OH–58C Helicopters, TM 55–1520–228–23–1, which is not incorporated by reference, contains more information about the subject of this AD. For United States Army service information, contact Commander, U.S. Army Aviation and Missile Command, ATTN: AMSAM–MMA–NP, Redstone Arsenal, AL 35898–5000, telephone (256) 876–4044; or at *https://www.logsa.army.mil/etmpdf/files/030000/035016.pdf.*

(4) You may review the service information at the FAA, Office of the Regional Counsel, Southwest Region, 2601 Meacham Blvd., Room 663, Fort Worth, Texas 76137.

(i) Subject

Joint Aircraft Service Component (JASC) Code: 6300: Main Rotor Drive.

Issued in Fort Worth, Texas, on October 24, 2014.

Lance T. Gant,

Acting Directorate Manager, Rotorcraft Directorate, Aircraft Certification Service.

[FR Doc. 2014–26829 Filed 11–13–14; 8:45 am]

BILLING CODE 4910–13–P

DEPARTMENT OF TRANSPORTATION

Federal Aviation Administration

14 CFR Part 71

[Docket No. 2014–0540; Amendment No. 71–46]

RIN 2120–AA66

Airspace Designations; Incorporation by Reference Amendments

AGENCY: Federal Aviation Administration (FAA), DOT.

ACTION: Final rule, technical amendment.

SUMMARY: This action incorporates certain amendments into FAA Order 7400.9Y, dated August 6, 2014, and effective September 15, 2014, for incorporation by reference in 14 CFR § 71.1.

DATES: Effective date 0901 UTC November 14, 2014. The Director of the Federal Register approves this incorporation by reference action under 1 CFR part 51, subject to the annual revision of FAA Order 7400.9 and publication of conforming amendments.

FOR FURTHER INFORMATION CONTACT: Sarah A. Combs, Airspace Policy and Regulations Group, Office of Airspace Services, Federal Aviation Administration, 800 Independence Avenue SW., Washington, DC 20591; telephone: (202) 267–8783.

SUPPLEMENTARY INFORMATION:

History

Federal Aviation Administration Airspace Order 7400.9, Airspace Designations and Reporting Points, incorporated by reference in 14 CFR 71.1, is published yearly. Amendments referred to as ''effective date straddling amendments'' were published under Order 7400.9X (dated August 7, 2013, and effective September 15, 2013), but became effective under Order 7400.9Y (dated August 6, 2014, and effective September 15, 2014). This action incorporates these rules into the current FAA Order 7400.9Y.

Accordingly, as this is an administrative correction to update final rule amendments into FAA Order 7400.9Y, notice and public procedure under 5 U.S.C. 553(b) are unnecessary. Also, to bring these rules and legal descriptions current, I find that good cause exists, under 5 U.S.C. 553(d), for making this amendment effective in less than 30 days.

The Rule

This action amends title 14 Code of Federal Regulations (14 CFR) Part 71 to incorporate certain final rules into the current FAA Order 7400.9Y, Airspace Designations and Reporting Points, dated August 6, 2014, and effective September 15, 2014, which are depicted on aeronautical charts.

The FAA has determined that this regulation only involves an established body of technical regulations for which frequent and routine amendments are necessary to keep them operationally current. Therefore, this regulation: (1) Is not a ''significant regulatory action'' under Executive Order 12866; (2) is not a ''significant rule'' under DOT Regulatory Policies and Procedures (44 FR 11034; February 26, 1979); and (3) does not warrant preparation of a regulatory evaluation as the anticipated impact is so minimal. Since this is a routine matter that only affects air traffic procedures and air navigation, it is certified that this rule, when promulgated, does not have a significant economic impact on a substantial number of small entities under the criteria of the Regulatory Flexibility Act.

The FAA's authority to issue rules regarding aviation safety is found in Title 49 of the United States Code. Subtitle I, Section 106 describes the authority of the FAA Administrator. Subtitle VII, Aviation Programs, describes in more detail the scope of the agency's authority.

This rulemaking is promulgated under the authority described in Subtitle VII, Part A, Subpart I, Section 40103. Under that section, the FAA is charged with prescribing regulations to assign the use of the airspace necessary to ensure the safety of aircraft and the efficient use of airspace. This regulation is within the scope of that authority as it makes the necessary updates for airspace areas within the National Airspace System.

List of Subjects in 14 CFR Part 71

Airspace, Incorporation by reference, Navigation (air).

Adoption of the Amendment

In consideration of the foregoing, the Federal Aviation Administration amends 14 CFR part 71 as follows:

PART 71—DESIGNATION OF CLASS A, B, C, D, AND E AIRSPACE AREAS; AIR TRAFFIC SERVICE ROUTES; AND REPORTING POINTS

■ 1. The authority citation for part 71 continues to read as follows:

Authority: 49 U.S.C. 106(g), 40103, 40113, 40120; E.O. 10854, 24 FR 9565, 3 CFR, 1959–1963 Comp., p. 389.

■ 2. Section 71.1 is revised to read as follows:

§ 71.1 [Amended]

For Docket No. FAA–2013–0171; Airspace Docket No. 13–ANM–6 (79 FR 35279, June 20, 2014). On page 35279, column 3, line 6, under History; and on page 35280, column 1, line 63, under Amendatory Instruction 2 remove ''. . . FAA Order 7400.9X, Airspace Designations and Reporting Points, dated August 7, 2013, and effective September 15, 2013, . . .'' and add in its place ''FAA Order 7400.9Y, Airspace Designations and Reporting Points, dated August 6, 2014, and effective September 15, 2014, . . .''.

For Docket No. FAA–2014–0013; Airspace Docket No. 13–ASW–33 (79 FR 36199, June 26, 2014). On page 36199, column 1, line 48, under History remove ''. . . FAA Order 7400.9X, Airspace Designations and Reporting Points, dated August 7, 2013, and effective September 15, 2013, . . .'' and add in its place ''FAA Order 7400.9Y, Airspace Designations and Reporting Points, dated August 6, 2014, and effective September 15, 2014, . . .''; and on page 36199 column 3, line 16, under Amendatory Instruction 2 remove ''. . . Federal Aviation Administration Order 7400.9X, Airspace Designations and Reporting Points, dated August 7, 2013, and effective September 15, 2013, . . .'' and add in its place ''Federal Aviation Administration Order 7400.9Y, Airspace Designations and Reporting Points, dated August 6, 2014, and effective September 15, 2014, . . .''.

For Docket No. FAA–2014–0154; Airspace Docket No. 14–ACE–1 (79 FR 37173, July 1, 2014). On page 37174, column 1, line 4, under History remove ''. . . FAA Order 7400.9X, Airspace Designations and Reporting Points, dated August 7, 2013, and effective September 15, 2013, . . .'' and add in its place ''FAA Order 7400.9Y, Airspace Designations and Reporting Points, dated August 6, 2014, and effective September 15, 2014, . . .''; and on page 37174 column 2, line 27, under Amendatory Instruction 2 remove ''. . . Federal Aviation Administration Order 7400.9X, Airspace Designations and Reporting Points, dated August 7, 2013, and effective September 15, 2013, . . .'' and add in its place ''Federal Aviation Administration Order 7400.9Y, Airspace Designations and Reporting Points, dated August 6, 2014, and effective September 15, 2014, . . .''.

For Docket No. FAA–2014–0224; Airspace Docket No. 13–ACE–15 (79 FR 37174, July 1, 2014). On page 37174, column 3, line 40, under History remove ''. . . FAA Order 7400.9X, Airspace Designations and Reporting Points, dated August 7, 2013, and effective September 15, 2013, . . .'' and add in its place ''FAA Order 7400.9Y, Airspace Designations and Reporting Points, dated August 6, 2014, and effective September 15, 2014, . . .''; and on page 37175 column 2, line 3, under Amendatory Instruction 2 remove ''. . . Federal Aviation Administration Order 7400.9X, Airspace Designations and Reporting Points, dated August 7, 2013, and effective September 15, 2013, . . .'' and add in its place ''Federal Aviation Administration Order 7400.9Y, Airspace Designations and Reporting Points, dated August 6, 2014, and effective September 15, 2014, . . .''.

For Docket No. FAA–2013–0859; Airspace Docket No. 13–AWA–4 (79 FR 38772, July 9, 2014). On page 38773, column 1, line 67, under the Rule remove ''. . . FAA Order 7400.9X, Airspace Designations and Reporting Points, dated August 7, 2013, and effective September 15, 2013, . . .'' and add in its place ''FAA Order 7400.9Y, Airspace Designations and Reporting Points, dated August 6, 2014, and effective September 15, 2014, . . .''; and on page 38774 column 2, line 24, under Amendatory Instruction 2 remove ''. . . Federal Aviation Administration Order 7400.9X, Airspace Designations and Reporting Points, dated August 7, 2013, and effective September 15, 2013, . . .'' and add in its place ''Federal Aviation Administration Order 7400.9Y, Airspace Designations and Reporting Points, dated August 6, 2014, and effective September 15, 2014, . . .''.

For Docket No. FAA–2013–0956; Airspace Docket No. 13–AWP–17 (79 FR 41877, July 18, 2014). On page 41877, column 3, line 50, under History remove ''. . . FAA Order 7400.9X, Airspace Designations and Reporting Points, dated August 7, 2013, and effective September 15, 2013, . . .'' and add in its place ''FAA Order 7400.9Y, Airspace Designations and Reporting Points, dated August 6, 2014, and effective September 15, 2014, . . .''; and on page 41878 column 2, line 19, under Amendatory Instruction 2 remove ''. . . Federal Aviation Administration Order 7400.9X, Airspace Designations and Reporting Points, dated August 7, 2013, and effective September 15, 2013, . . .'' and add in its place ''Federal Aviation Administration Order 7400.9Y, Airspace Designations and Reporting Points, dated August 6, 2014, and effective September 15, 2014, . . .''.

For Docket No. FAA–2013–0995; Airspace Docket No. 13–ASW–30 (79 FR 41878, July 18, 2014). On page 41878, column 3, line 51, under History remove ''. . . FAA Order 7400.9X, Airspace Designations and Reporting Points, dated August 7, 2013, and effective September 15, 2013, . . .'' and add in its place ''FAA Order 7400.9Y, Airspace Designations and Reporting Points, dated August 6, 2014, and effective September 15, 2014, . . .''; and on page 41879 column 2, line 16, under Amendatory Instruction 2 remove ''. . . Federal Aviation Administration Order 7400.9X, Airspace Designations and Reporting Points, dated August 7, 2013, and effective September 15, 2013, . . .'' and add in its place ''Federal Aviation Administration Order 7400.9Y, Airspace Designations and Reporting Points, dated August 6, 2014, and effective September 15, 2014, . . .''.

For Docket No. FAA–2013–0987; Airspace Docket No. 13–AWP–19 (79 FR 44270, July 31, 2014). On page 44270, column 3, line 36, under Addresses remove ''FAA Order 7400.9X, . . .'' and add in its place ''FAA Order 7400.9Y, . . .''; on page 44271, column 1, line 17 under History remove ''. . . FAA Order 7400.9X, Airspace Designations and Reporting Points, dated August 7, 2013, and effective September 15, 2013, . . .'' and add in its place ''FAA Order 7400.9Y, Airspace Designations and Reporting Points, dated August 6, 2014, and effective September 15, 2014, . . .''; and on page 44271 column 2, line 44, under Amendatory Instruction 2 remove ''. . . Federal Aviation Administration Order 7400.9X, Airspace Designations and Reporting Points, dated August 7, 2013, and effective September 15, 2013, . . .'' and add in its place ''Federal Aviation Administration Order 7400.9Y, Airspace Designations and Reporting Points, dated August 6, 2014, and effective September 15, 2014, . . .''.

For Docket No. FAA–2014–0384; Airspace Docket No. 14–ANE–6 (79 FR 44679, August 1, 2014). On page 44679, column 3, line 51, under Amendatory Instruction 2 remove ''. . . Federal Aviation Administration Order 7400.9X, Airspace Designations and Reporting Points, dated August 7, 2013, and effective September 15, 2013, . . .'' and add in its place ''Federal Aviation Administration Order 7400.9Y, Airspace Designations and Reporting Points, dated August 6, 2014, and effective September 15, 2014, . . .''.

For Docket No. FAA–2014–0082; Airspace Docket No. 14–ASO–3 (79 FR 46180, August 7, 2014). On page 46180 column 1, line 43, under Addresses remove ''FAA Order 7400.9X, . . .'' and add in its place ''FAA Order 7400.9Y, . . .''; on page 46180, column 2, line 26, under History remove ''. . . FAA Order 7400.9X, Airspace Designations and Reporting Points, dated August 7, 2013, and effective September 15, 2013, . . .'' and add in its place ''FAA Order 7400.9Y, Airspace Designations and Reporting Points, dated August 6, 2014, and effective September 15, 2014, . . .''; and on page 46180 column 3, line 43, under Amendatory Instruction 2 remove ''. . . Federal Aviation Administration Order 7400.9X, Airspace Designations and Reporting Points, dated August 7, 2013, and effective September 15, 2013, . . .'' and add in its place ''Federal Aviation Administration Order 7400.9Y, Airspace Designations and Reporting Points, dated August 6, 2014, and effective September 15, 2014, . . .''.

For Docket No. FAA–2014–0104; Airspace Docket No. 13–AEA–4 (79 FR 47556, August 14, 2014). On page

47556, column 3, line 1, under Addresses remove ''FAA Order 7400.9X, . . .'' and add in its place ''FAA Order 7400.9Y, . . .''; on page 47557, column 1, line 9, under the Rule; and on page 47557, column 2, line 22, under Amendatory Instruction 2 remove ''. . . FAA Order 7400.9X, Airspace Designations and Reporting Points, dated August 7, 2013, and effective September 15, 2013, . . .'' and add in its place ''FAA Order 7400.9Y, Airspace Designations and Reporting Points, dated August 6, 2014, and effective September 15, 2014, . . .''.

For Docket No. FAA–2014–0501; Airspace Docket No. 14–AGL–11 (79 FR 47557, August 14, 2014). On page 47557 column 3, line 32, under Addresses remove ''FAA Order 7400.9X, . . .'' and add in its place ''FAA Order 7400.9Y, . . .''; on page 47558, column 2, line 27, under the Rule remove ''. . . FAA Order 7400.9X, Airspace Designations and Reporting Points, dated August 7, 2013, and effective September 15, 2013, . . .'' and add in its place ''FAA Order 7400.9Y, Airspace Designations and Reporting Points, dated August 6, 2014, and effective September 15, 2014, . . .''; and on page 47558 column 3, line 6, under Amendatory Instruction 2 remove ''. . . Federal Aviation Administration Order 7400.9X, Airspace Designations and Reporting Points, dated August 7, 2013, and effective September 15, 2013, . . .'' and add in its place ''Federal Aviation Administration Order 7400.9Y, Airspace Designations and Reporting Points, dated August 6, 2014, and effective September 15, 2014, . . .''.

For Docket No. FAA–2013–0990; Airspace Docket No. 13–AGL–8 (79 FR 47559, August 14, 2014). On page 47559, column 1, line 31, under Addresses remove ''FAA Order 7400.9X, . . .'' and add in its place ''FAA Order 7400.9Y, . . .''; on page 47559, column 3, line 42, under the Rule; and on page 47560, column 3, line 6, under Amendatory Instruction 2 remove ''. . . FAA Order 7400.9X, Airspace Designations and Reporting Points, dated August 7, 2013, and effective September 15, 2013, . . .'' and add in its place ''FAA Order 7400.9Y, Airspace Designations and Reporting Points, dated August 6, 2014, and effective September 15, 2014, . . .''.

For Docket No. FAA–2014–0368; Airspace Docket No. 13–AGL–26 (79 FR 48032, August 15, 2014). On page 48033, column 1, line 6, under Addresses remove ''FAA Order 7400.9X, . . .'' and add in its place ''FAA Order 7400.9Y, . . .''; on page 48033, column 2, line 53, under the Rule; and on page 48034, column 1, line 3, under Amendatory Instruction 2 remove ''. . . FAA Order 7400.9X, Airspace Designations and Reporting Points, dated August 7, 2013, and effective September 15, 2013, . . .'' and add in its place ''FAA Order 7400.9Y, Airspace Designations and Reporting Points, dated August 6, 2014, and effective September 15, 2014, . . .''.

For Docket No. FAA–2013–0994; Airspace Docket No. 13–ASW–29 (79 FR 52192, September 3, 2014). On page 52193 column 1, line 4, under Addresses remove ''FAA Order 7400.9X, . . .'' and add in its place ''FAA Order 7400.9Y, . . .''; on page 52193, column 1, line 47, under History remove ''. . . FAA Order 7400.9X, Airspace Designations and Reporting Points, dated August 7, 2013, and effective September 15, 2013, . . .'' and add in its place ''FAA Order 7400.9Y, Airspace Designations and Reporting Points, dated August 6, 2014, and effective September 15, 2014, . . .''; and on page 52193 column 3, line 12, under Amendatory Instruction 2 remove ''. . . Federal Aviation Administration Order 7400.9X, Airspace Designations and Reporting Points, dated August 7, 2013, and effective September 15, 2013, . . .'' and add in its place ''Federal Aviation Administration Order 7400.9Y, Airspace Designations and Reporting Points, dated August 6, 2014, and effective September 15, 2014, . . .''.

For Docket No. FAA–2013–1016; Airspace Docket No. 13–ANM–25 (79 FR 52194, September 3, 2014). On page 52194 column 1, line 27, under Addresses remove ''FAA Order 7400.9X, . . .'' and add in its place ''FAA Order 7400.9Y, . . .''; on page 52194, column 2, line 6, under History remove ''. . . FAA Order 7400.9X, Airspace Designations and Reporting Points, dated August 7, 2013, and effective September 15, 2013, . . .'' and add in its place ''FAA Order 7400.9Y, Airspace Designations and Reporting Points, dated August 6, 2014, and effective September 15, 2014, . . .''; and on page 52194 column 3, line 29, under Amendatory Instruction 2 remove ''. . . Federal Aviation Administration Order 7400.9X, Airspace Designations and Reporting Points, dated August 7, 2013, and effective September 15, 2013, . . .'' and add in its place ''Federal Aviation Administration Order 7400.9Y, Airspace Designations and Reporting Points, dated August 6, 2014, and effective September 15, 2014, . . .''.

For Docket No. FAA–2013–0957; Airspace Docket No. 13–AWP–18 (79 FR 52957, September 5, 2014). On page 52957 column 2, line 4, under Addresses remove ''FAA Order 7400.9X, . . .'' and add in its place ''FAA Order 7400.9Y, . . .''; on page 52957, column 2, line 47, under History remove ''. . . FAA Order 7400.9X, Airspace Designations and Reporting Points, dated August 7, 2013, and effective September 15, 2013, . . .'' and add in its place ''FAA Order 7400.9Y, Airspace Designations and Reporting Points, dated August 6, 2014, and effective September 15, 2014, . . .''; and on page 52958 column 1, line 12, under Amendatory Instruction 2 remove ''. . . Federal Aviation Administration Order 7400.9X, Airspace Designations and Reporting Points, dated August 7, 2013, and effective September 15, 2013, . . .'' and add in its place ''Federal Aviation Administration Order 7400.9Y, Airspace Designations and Reporting Points, dated August 6, 2014, and effective September 15, 2014, . . .''.

For Docket No. FAA–2013–0960; Airspace Docket No. 13–AGL–17 (79 FR 54185, September 11, 2014). On page 54185, column 1, line 50, under Addresses remove ''FAA Order 7400.9X, . . .'' and add in its place ''FAA Order 7400.9Y, . . .''; on page 54186 column 1, line 37, under the Rule; and on page 54186, column 2, line 49, under Amendatory Instruction 2 remove ''. . . FAA Order 7400.9X, Airspace Designations and Reporting Points, dated August 7, 2013, and effective September 15, 2013, . . .'' and add in its place ''FAA Order 7400.9Y, Airspace Designations and Reporting Points, dated August 6, 2014, and effective September 15, 2014, . . .''.

For Docket No. FAA–2014–0273; Airspace Docket No. 14–ANE–2 (79 FR 57901, September 15, 2014). On page 54901, column 1, line 43, under Addresses remove ''FAA Order 7400.9X, . . .'' and add in its place ''FAA Order 7400.9Y, . . .''; on page 54901, column 3, line 7, under the Rule; and on page 54902 column 2, line 6, under Amendatory Instruction 2 remove ''. . . FAA Order 7400.9X, Airspace Designations and Reporting Points, dated August 7, 2013, and effective September 15, 2013, . . .'' and add in its place ''FAA Order 7400.9Y, Airspace Designations and Reporting Points, dated August 6, 2014, and effective September 15, 2014, . . .''.

Issued in Washington, DC, on November 6, 2014.

Gary A. Norek,

Manager, Airspace Policy and Regulations Group.

[FR Doc. 2014–26861 Filed 11–13–14; 8:45 am]

BILLING CODE 4910–14–P

DEPARTMENT OF HEALTH AND HUMAN SERVICES

Food and Drug Administration

21 CFR Parts 5, 10, 14, 20, 21, 314, 350, 516, and 814

[Docket No. FDA–2011–N–0318]

Division of Freedom of Information; Change of Office Name, and Removal of Address, Telephone Number, and Fax Number; Technical Amendment

AGENCY: Food and Drug Administration, HHS.

ACTION: Final rule; technical amendments.

SUMMARY: The Food and Drug Administration (FDA) is amending the Agency's regulations to change the Division of Freedom of Information's (FOI's) name, and remove the address, telephone number, fax number, and Public Reading Room fax number and room number and replace them with FOI's address located on the Agency's Web site. This action is editorial in nature and is intended to improve the accuracy of the Agency's regulations.

DATES: This rule is effective November 14, 2014.

FOR FURTHER INFORMATION CONTACT: Sarah Kotler, Freedom of Information Staff, Food and Drug Administration, 301–796–8975, address available on the Agency's Web site at *http://www.fda.gov.*

SUPPLEMENTARY INFORMATION: FDA is making technical amendments in the Agency's regulations under 21 CFR parts 5, 10, 14, 20, 21, 314, 350, 516, and 814 as a result of a recent office move. The office name and address was ''Division of Freedom of Information (ELEM–1029), 12420 Parklawn Dr., Element Bldg., Rockville, MD 20857''. The new office name and address is listed on the Agency's Web site at *http://www.fda.gov.* The Freedom of Information Staff's new Public Reading Room number is listed on the Agency's Web site at *http://www.fda.gov.* Publication of this document constitutes final action of these changes under the Administrative Procedures Act (5 U.S.C. 553). FDA has determined that notice and public comment are unnecessary because these amendments are merely correcting nonsubstantive errors.

List of Subjects

21 CFR Part 5

Authority delegations (Government agencies), Imports, Organization and functions (Government agencies).

21 CFR Part 10

Administrative practice and procedure, News media.

21 CFR Part 14

Administrative practice and procedure, Advisory committees, Color additives, Drugs, Radiation protection.

21 CFR Part 20

Confidential business information, Courts, Freedom of Information, Government employees.

21 CFR Part 21

Privacy.

21 CFR Part 314

Administrative practice and procedure, Confidential business information, Drugs, Reporting and recordkeeping requirements.

21 CFR Part 350

Labeling, Over-the-counter drugs.

21 CFR Part 516

Administrative practice and procedure, Animal drugs, Confidential business information, Reporting and recordkeeping requirements.

21 CFR Part 814

Administrative practice and procedure, Confidential business information, Medical devices, Medical research, Reporting and recordkeeping requirements.

Therefore, under the Federal Food, Drug, and Cosmetic Act and under authority delegated to the Commissioner of Food and Drugs, 21 CFR parts 5, 10, 14, 20, 21, 314, 350, 516, and 814 are amended as follows:

PART 5—ORGANIZATION

■ 1. The authority citation for 21 CFR part 5 continues to read as follows:

Authority: 5 U.S.C. 552; 21 U.S.C. 301–397.

■ 2. In § 5.1110, revise paragraph (b) to read as follows:

§ 5.1110 FDA public information offices.

* * * * *

(b) *Freedom of Information Staff.* The Freedom of Information Staff's Public Reading Room is located at the address available on the Agency's Web site at *http://www.fda.gov.*

* * * * *

PART 10—ADMINISTRATIVE PRACTICES AND PROCEDURES

■ 3. The authority citation for 21 CFR part 10 continues to read as follows:

Authority: 5 U.S.C. 551–558, 701–706; 15 U.S.C. 1451–1461; 21 U.S.C. 141–149, 321–397, 467f, 679, 821, 1034; 28 U.S.C. 2112; 42 U.S.C. 201, 262, 263b, 264.

§ 10.85 [Amended]

■ 4. Section 10.85 is amended in paragraph (d)(4) by removing ''(ELEM–1029)'' and adding in its place ''(the Freedom of Information Staff's address is available on the Agency's Web site at *http://www.fda.gov*)''.

§ 10.90 [Amended]

■ 5. Section 10.90 is amended in paragraph (d) by removing ''(ELEM–1029)'' and adding in its place ''(the Freedom of Information Staff's address is available on the Agency's Web site at *http://www.fda.gov*)''.

§ 10.95 [Amended]

■ 6. Section 10.95 is amended in paragraphs (b)(2), (c)(2), (d)(2), (d)(7), and (d)(8) by removing ''(ELEM–1029)'' and adding in its place ''(the Freedom of Information Staff's address is available on the Agency's Web site at *http://www.fda.gov*)''.

PART 14—PUBLIC HEARING BEFORE A PUBLIC ADVISORY COMMITTEE

■ 7. The authority citation for 21 CFR part 14 continues to read as follows:

Authority: 5 U.S.C. App. 2; 15 U.S.C. 1451–1461, 21 U.S.C. 41–50, 141–149, 321–394, 467f, 679, 821, 1034; 28 U.S.C. 2112; 42 U.S.C. 201, 262, 263b, 264; Pub. L. 107–109; Pub. L. 108–155, Pub. L. 113–54.

§ 14.65 [Amended]

■ 8. Section 14.65 is amended in paragraph (c) by removing ''(ELEM–1029)'' and by adding in its place ''(the Freedom of Information Staff's address is available on the Agency's Web site at *http://www.fda.gov*)''.

PART 20—PUBLIC INFORMATION

■ 9. The authority citation for 21 CFR part 20 continues to read as follows:

Authority: 5 U.S.C. 552; 18 U.S.C. 1905; 19 U.S.C. 2531–2582; 21 U.S.C. 321–393, 1401–1403; 42 U.S.C. 241, 242, 242a, 242l, 242n, 243, 262, 263, 263b–263n, 264, 265, 300u–300u–5, 300aa–1.

§ 20.3 [Amended]

■ 10. Section 20.3 is amended in paragraph (b) by removing ''(ELEM–1029), Food and Drug Administration, 12420 Parklawn Dr., Element Bldg., Rockville, MD 20857'' and adding in its place '' at the address located on the Agency's Web site at *http://www.fda.gov.*''

■ 11. In § 20.26, revise paragraph (b) to read as follows:

§ 20.26 Indexes of certain records.

* * * * *

(b) Each such index will be made available by accessing the Agency's Web site at *http://www.fda.gov.* A printed copy of each index is available by writing or visiting the Freedom of Information Staff's address on the Agency's Web site at *http://www.fda.gov.*

§ 20.30 [Amended]

■ 12. Section 20.30 is amended in paragraph (a) by removing ''(ELEM–1029), Food and Drug Administration, 12420 Parklawn Dr., Element Bldg., Rockville, MD 20857'' and adding in its place ''at the address located on the Agency's Web site at *http://www.fda.gov.*''

■ 13. In § 20.40, revise paragraph (a) to read as follows:

§ 20.40 Filing a request for records.

(a) All requests for Food and Drug Administration records shall be made in writing by mailing or delivering the request to the Freedom of Information Staff at the address on the Agency's Web site at *http://www.fda.gov* or by faxing it to the fax number listed on the Agency's Web site at *http://www.fda.gov.* All requests must contain the postal address and telephone number of the requester and the name of the person responsible for payment of any fees that may be charged.

* * * * *

§ 20.107 [Amended]

■ 14. Section 20.107 is amended in paragraph (a) by removing ''(ELEM–1029), Food and Drug Administration, 12420 Parklawn Dr., Element Bldg., Rockville, MD 20857'' and adding in its place ''at the address located on the Agency's Web site at *http://www.fda.gov.*''

■ 15. In § 20.120, revise paragraph (a) to read as follows:

§ 20.120 Records available in Food and Drug Administration Public Reading Rooms.

(a) The Freedom of Information Staff and the Division of Dockets Management Public Reading Room are located at the same address. Both are located in rm. 1061, 5630 Fishers Lane, Rockville, MD 20852. The telephone number for the Division of Docket Management is 301–827–6860; the telephone number for the Freedom of Information Staff's Public Reading Room is located at the address on the Agency's Web site at *http://www.fda.gov.* Both public reading rooms are open from 9 a.m. to 4 p.m., Monday through Friday, excluding legal public holidays.

* * * * *

PART 21—PROTECTION OF PRIVACY

■ 16. The authority citation for 21 CFR part 21 continues to read as follows:

Authority: 21 U.S.C. 371; 5 U.S.C. 552, 552a.

§ 21.32 [Amended]

■ 17. Section 21.32 is amended in paragraph (b)(2) in the second sentence by removing ''(HFA–400), Food and Drug Administration, 5600 Fishers Lane, Rockville, MD 20857'' and by adding in its place ''HR–BETHPL RM7114, HFA–705, 7700 Wisconsin Ave., 7th & 8th floors, Bethesda, MD 20814'' and in the third sentence by removing ''(ELEM–1029)'' and by adding in its place ''(the Privacy Act Coordinator is part of the Freedom of Information Staff, the address for which is located on the Agency Web site at *http://www.fda.gov*)''.

§ 21.40 [Amended]

■ 18. Section 21.40 is amended in paragraph (b) by removing ''(ELEM–1029), Food and Drug Administration, 12420 Parklawn Dr., Element Bldg., Rockville, MD 20857'' and by adding in its place ''(address is located on the Agency Web site at *http://www.gov.fda*)''.

§ 21.41 [Amended]

■ 19. Section 21.41 is amended in paragraphs (c) and (e) by removing ''(ELEM–1029)'' and by adding in its place ''(address is located on the Agency Web site at *http://www.gov.fda*)''.

§ 21.43 [Amended]

■ 20. Section 21.43 is amended in paragraph (a)(2) by removing ''at the address shown in § 20.30 of this chapter'' and by adding in its place ''(address is located on the Agency's Web site at *http://www.fda.gov*)''.

§ 21.52 [Amended]

■ 21. Section 21.52 is amended in paragraph (a) by removing '', Rm. 14–71, 5600 Fishers Lane, Rockville, MD 20857'' and by adding in its place ''(see the address on the Agency's Web site at *http://www.fda.gov*)''.

PART 314—APPLICATIONS FOR FDA APPROVAL TO MARKET A NEW DRUG

■ 22. The authority citation for 21 CFR part 314 continues to read as follows:

Authority: 21 U.S.C. 321, 331, 351, 352, 353, 355, 356, 356a, 356b, 356c, 371, 374, 379e.

■ 23. In § 314.53, in paragraph (e), revise the last sentence to read as follows:

§ 314.53 Submission of patent information.

* * * * *

(e) * * * A request for copies of the file shall be sent in writing to the Freedom of Information Staff at the address listed on the Agency's Web site at *http://www.fda.gov.*

* * * * *

PART 350—ANTIPERSPIRANT DRUG PRODUCTS FOR OVER-THE-COUNTER HUMAN USE

■ 24. The authority citation for 21 CFR part 350 continues to read as follows:

Authority: 21 U.S.C. 321, 351, 352, 353, 355, 360, 371.

§ 350.60 [Amended]

■ 25. Section 350.60 is amended by removing ''(ELEM–1029), Food and Drug Administration, 12420 Parklawn Dr., Element Bldg., Rockville, MD 20857'' and adding in its place ''(address is located on the Agency's Web site at *http://www.fda.gov.*''

PART 516—NEW ANIMAL DRUGS FOR MINOR USE AND MINOR SPECIES

■ 26. The authority citation for part 516 continues to read as follows:

Authority: 21 U.S.C. 360ccc–1, 360ccc–2, 371.

■ 27. In § 516.157, revise paragraph (a) to read as follows:

§ 516.157 Publication of the index and content of an index listing.

(a) FDA will make the list of indexed drugs available through the FDA Web site at *http://www.fda.gov.* A printed copy can be obtained by writing to the Freedom of Information Staff or by visiting FDA's Freedom of Information Staff's Public Reading Room at the address listed on the Agency's Web site at *http://www.fda.gov.*

* * * * *

PART 814—PREMARKET APPROVAL OF MEDICAL DEVICES

■ 28. The authority citation for 21 CFR part 814 continues to read as follows:

Authority: 21 U.S.C. 351, 352, 353, 360, 360c–360j, 371, 372, 373, 374, 375, 379, 379e, 381.

■ 29. In § 814.45, revise paragraph (d)(2) to read as follows:

§ 814.45 Denial of approval of a PMA.

* * * * *

(d) * * *

(2) A request for copies of the current PMA approvals and denials document and copies of summaries of safety and effectiveness shall be sent in writing to the Freedom of Information Staff's address listed on the Agency's Web site at *http://www.fda.gov.*

* * * * *

Dated: November 7, 2014.

Leslie Kux,

Assistant Commissioner for Policy.

[FR Doc. 2014–26914 Filed 11–13–14; 8:45 am]

BILLING CODE 4164–01–P

DEPARTMENT OF STATE

22 CFR Part 181

[Public Notice 8921]

RIN 1400–AD53

Publication, Coordination, and Reporting of International Agreements

ACTION: Final rule.

SUMMARY: The Department of State (''Department'') finalizes a proposed rule to add additional categories of international agreements to be exempted from the requirement to publish in the Treaties and Other International Acts Series (TIAS). The TIAS is the official treaty series of the United States and serves as evidence of the treaties, and international agreements other than treaties, in all courts of law and equity and of maritime jurisdiction, and in all the tribunals and public offices of the United States and of the several States, without any need of further proof or authentication. Certain international agreements may be exempted from publication in TIAS if the Department of State provides notice in its regulations. This rule adds three categories of international agreements that are not required to be published in TIAS.

DATES: This rule is effective on November 14, 2014.

FOR FURTHER INFORMATION CONTACT: Michael Mattler, Treaty Affairs, Office of the Legal Adviser, Department of State, Washington, DC 20520, (202) 647–1345, or at *treatyoffice@state.gov.*

SUPPLEMENTARY INFORMATION: Pursuant to 1 U.S.C. 112a, the Secretary of State is required to cause to be published annually a compilation of all treaties and international agreements to which the United States is a party that were signed, proclaimed, or ''with reference to which any other final formality ha[d] been executed'' during the calendar year.

The Secretary of State, however, may determine that publication of particular categories of agreements is not required if certain criteria are met, which are listed in 1 U.S.C. 112a(b). The three categories of international agreements that are exempted by this rule (and which are now included in 22 CFR 181.8) are:

(1) Bilateral acquisition and cross servicing agreements and logistics support agreements governing the mutual exchange of logistics support, supplies and services with the military of certain countries or international organizations.

(2) Bilateral agreements relating to the provision of health care to military personnel on a reciprocal basis.

(3) Bilateral agreements for the reduction of intergovernmental debts.

Further description of these types of international agreements is included in the notice of proposed rulemaking. In addition to these changes, the Department amends 22 CFR 181.8(a)(9) to refer to the newer Executive Order dealing with classified information.

The Department of State received no comments on the proposed rule.

Regulatory Analysis

For the complete regulatory analysis regarding this rulemaking, please refer to the analysis included in the notice of proposed rulemaking, which is adopted herein.

List of Subjects in 22 CFR Part 181

Treaties.

For the reasons set forth above, 22 CFR part 181 is amended as follows:

PART 181—[AMENDED]

■ 1. The authority citation for part 181 continues to read as follows:

Authority: 1 U.S.C. 112a, 112b; and 22 U.S.C. 2651a.

■ 2. Amend § 181.8 by:

■ a. Revising paragraphs (a)(9), (12), and (13) and adding paragraphs (a)(14), (15), and (16); and

■ b. Revising paragraph (b).

The revisions and additions read as follows:

§ 181.8 Publication.

(a) * * *

(9) Agreements that have been given a national security classification pursuant to Executive Order No. 13526, its predecessors, or its successors;

* * * * *

(12) Bilateral agreements that apply to specified education and leadership development programs designed to acquaint U.S. and foreign armed forces, law enforcement, homeland security, or related personnel with limited, specialized aspects of each other's practices or operations;

(13) Bilateral agreements between aviation agencies governing specified aviation technical assistance projects for the provision of managerial, operational, and technical assistance in developing and modernizing the civil aviation infrastructure;

(14) Bilateral acquisition and cross servicing agreements and logistics support agreements;

(15) Bilateral agreements relating to the provision of health care to military personnel on a reciprocal basis; and

(16) Bilateral agreements for the reduction of intergovernmental debts.

(b) In addition to those listed in paragraph (a) of this section, the following categories of agreements will not be published in United States Treaties and Other International Agreements:

(1) Agreements on the subjects listed in paragraphs (a)(1) through (9) of this section that had not been published as of February 26, 1996;

(2) Agreements on the subjects listed in paragraphs (a)(10) through (13) of this section that had not been published as of September 8, 2006; and

(3) Agreements on the subjects listed in paragraphs (a)(14) through (16) of this section that had not been published as of November 14, 2014.

* * * * *

Dated: November 5, 2014.

Michael J. Mattler,

Assistant Legal Adviser for Treaty Affairs, Department of State.

[FR Doc. 2014–27006 Filed 11–13–14; 8:45 am]

BILLING CODE 4710–08–P

PENSION BENEFIT GUARANTY CORPORATION

29 CFR Part 4022

Benefits Payable in Terminated Single-Employer Plans; Interest Assumptions for Paying Benefits

AGENCY: Pension Benefit Guaranty Corporation.

ACTION: Final rule.

SUMMARY: This final rule amends the Pension Benefit Guaranty Corporation's regulation on Benefits Payable in Terminated Single-Employer Plans to prescribe interest assumptions under the regulation for valuation dates in December 2014. The interest assumptions are used for paying benefits under terminating single-employer plans covered by the pension insurance system administered by PBGC.

DATES: Effective December 1, 2014.

FOR FURTHER INFORMATION CONTACT: Catherine B. Klion (*Klion.Catherine@pbgc.gov*), Assistant General Counsel for Regulatory Affairs, Pension Benefit Guaranty Corporation, 1200 K Street NW., Washington, DC 20005, 202–326–4024. (TTY/TDD users may call the Federal relay service toll-free at 1–800–877–8339 and ask to be connected to 202–326–4024.)

SUPPLEMENTARY INFORMATION: PBGC's regulation on Benefits Payable in Terminated Single-Employer Plans (29 CFR Part 4022) prescribes actuarial assumptions—including interest assumptions—for paying plan benefits under terminating single-employer plans covered by title IV of the Employee Retirement Income Security Act of 1974. The interest assumptions in the regulation are also published on PBGC's Web site (*http://www.pbgc.gov*).

PBGC uses the interest assumptions in Appendix B to Part 4022 to determine whether a benefit is payable as a lump sum and to determine the amount to pay. Appendix C to Part 4022 contains interest assumptions for private-sector pension practitioners to refer to if they wish to use lump-sum interest rates determined using PBGC's historical methodology. Currently, the rates in Appendices B and C of the benefit payment regulation are the same.

The interest assumptions are intended to reflect current conditions in the financial and annuity markets. Assumptions under the benefit payments regulation are updated monthly. This final rule updates the benefit payments interest assumptions for December 2014.[1]

The December 2014 interest assumptions under the benefit payments regulation will be 1.00 percent for the period during which a benefit is in pay status and 4.00 percent during any years preceding the benefit's placement in pay status. In comparison with the interest assumptions in effect for November 2014, these interest assumptions represent a decrease of 0.25 percent in the immediate annuity rate and are otherwise unchanged.

PBGC has determined that notice and public comment on this amendment are impracticable and contrary to the public interest. This finding is based on the need to determine and issue new interest assumptions promptly so that the assumptions can reflect current market conditions as accurately as possible.

Because of the need to provide immediate guidance for the payment of benefits under plans with valuation dates during December 2014, PBGC finds that good cause exists for making the assumptions set forth in this amendment effective less than 30 days after publication.

PBGC has determined that this action is not a ''significant regulatory action'' under the criteria set forth in Executive Order 12866.

Because no general notice of proposed rulemaking is required for this amendment, the Regulatory Flexibility Act of 1980 does not apply. See 5 U.S.C. 601(2).

List of Subjects in 29 CFR Part 4022

Employee benefit plans, Pension insurance, Pensions, Reporting and recordkeeping requirements.

In consideration of the foregoing, 29 CFR part 4022 is amended as follows:

PART 4022—BENEFITS PAYABLE IN TERMINATED SINGLE-EMPLOYER PLANS

■ 1. The authority citation for part 4022 continues to read as follows:

Authority: 29 U.S.C. 1302, 1322, 1322b, 1341(c)(3)(D), and 1344.

■ 2. In appendix B to part 4022, Rate Set 254, as set forth below, is added to the table.

Appendix B to Part 4022—Lump Sum Interest Rates for PBGC Payments

* * * * *

Rate set	For plans with a valuation date		Immediate annuity rate (percent)	Deferred annuities (percent)				
	On or after	Before		i_1	i_2	i_3	n_1	n_2
*	*	*	*	*	*	*	*	
254	12–1–14	1–1–15	1.00	4.00	4.00	4.00	7	8

■ 3. In appendix C to part 4022, Rate Set 254, as set forth below, is added to the table.

Appendix C to Part 4022—Lump Sum Interest Rates for Private-Sector Payments

* * * * *

Rate set	For plans with a valuation date		Immediate annuity rate (percent)	Deferred annuities (percent)				
	On or after	Before		i_1	i_2	i_3	n_1	n_2
*	*	*	*	*	*	*	*	
254	12–1–14	1–1–15	1.00	4.00	4.00	4.00	7	8

[1] Appendix B to PBGC's regulation on Allocation of Assets in Single-Employer Plans (29 CFR Part 4044) prescribes interest assumptions for valuing benefits under terminating covered single-employer plans for purposes of allocation of assets under ERISA section 4044. Those assumptions are updated quarterly.

Issued in Washington, DC, on this 7th day of November 2014.

Judith Starr,

General Counsel, Pension Benefit Guaranty Corporation.

[FR Doc. 2014–26981 Filed 11–13–14; 8:45 am]

BILLING CODE 7709–02–P

DEPARTMENT OF DEFENSE

Department of the Navy

32 CFR Part 706

Certifications and Exemptions Under the International Regulations for Preventing Collisions at Sea, 1972

AGENCY: Department of the Navy, DoD.

ACTION: Final rule.

SUMMARY: The Department of the Navy (DoN) is amending its certifications and exemptions under the International Regulations for Preventing Collisions at Sea, 1972 (72 COLREGS), to reflect that the Deputy Assistant Judge Advocate General (DAJAG) (Admiralty and Maritime Law) has determined that USS MILWAUKEE (LCS 5) is a vessel of the Navy which, due to its special construction and purpose, cannot fully comply with certain provisions of the 72 COLREGS without interfering with its special function as a naval ship. The intended effect of this rule is to warn mariners in waters where 72 COLREGS apply.

DATES: This rule is effective November 14, 2014, and is applicable beginning October 31, 2014.

FOR FURTHER INFORMATION CONTACT: Commander Theron R. Korsak, JAGC, U.S. Navy, Admiralty Attorney, (Admiralty and Maritime Law), Office of the Judge Advocate General, Department of the Navy, 1322 Patterson Ave. SE., Suite 3000, Washington Navy Yard, DC 20374–5066, telephone number: 202–685–5040.

SUPPLEMENTARY INFORMATION: Pursuant to the authority granted in 33 U.S.C. 1605, the DoN amends 32 CFR Part 706.

This amendment provides notice that the DAJAG (Admiralty and Maritime Law), under authority delegated by the Secretary of the Navy, has certified that USS MILWAUKEE (LCS 5) is a vessel of the Navy which, due to its special construction and purpose, cannot fully comply with the following specific provisions of 72 COLREGS without interfering with its special function as a naval ship: Annex I paragraph 2 (a)(i), pertaining to the location of the forward masthead light at a height not less than 12 meters above the hull; Annex I, paragraph 3(a), pertaining to the location of the forward masthead light in the forward quarter of the ship, and the horizontal distance between the forward and after masthead light. The DAJAG (Admiralty and Maritime Law) has also certified that the lights involved are located in closest possible compliance with the applicable 72 COLREGS requirements.

Moreover, it has been determined, in accordance with 32 CFR Parts 296 and 701, that publication of this amendment for public comment prior to adoption is impracticable, unnecessary, and contrary to public interest since it is based on technical findings that the placement of lights on this vessel in a manner differently from that prescribed herein will adversely affect the vessel's ability to perform its military functions.

List of Subjects in 32 CFR Part 706

Marine safety, Navigation (water), and Vessels.

For the reasons set forth in the preamble, the DoN amends part 706 of title 32 of the Code of Federal Regulations as follows:

PART 706—CERTIFICATIONS AND EXEMPTIONS UNDER THE INTERNATIONAL REGULATIONS FOR PREVENTING COLLISIONS AT SEA, 1972

■ 1. The authority citation for part 706 continues to read as follows:

Authority: 33 U.S.C. 1605.

■ 2. Section 706.2 is amended:

■ a. In Table One, by adding, in alpha numerical order, by vessel number, an entry for USS MILWAUKEE (LCS 5);

■ b. In Table Five, by adding, in alpha numerical order, by vessel number, an entry for USS MILWAUKEE (LCS 5).

§ 706.2 Certifications of the Secretary of the Navy under Executive Order 11964 and 33 U.S.C. 1605.

* * * * *

TABLE ONE

Vessel	Number	Distance in meters of forward masthead light below minimum required height. § 2(a)(i) Annex I
* * *	* * *	*
USS MILWAUKEE	LCS 5	6.75
* * *	* * *	*

TABLE FIVE

Vessel	Number	Masthead lights not over all other lights and obstructions. annex I, sec. 2(f)	Forward masthead light not in forward quarter of ship. annex I, sec. 3(a)	After masthead light less than ½ ship's length aft of forward masthead light. annex I, sec. 3(a)	Percentage horizontal separation attained
* * *	*	*		*	*
USS MILWAUKEE	LCS 5		X	X	22.3
* * *	*	*		*	*

* * * * *

Approved: October 31, 2014.

A. B. Fischer,

Captain, JAGC, U.S. Navy, Deputy Assistant Judge Advocate, General (Admiralty and Maritime Law).

Dated: November 7, 2014.

N. A. Hagerty-Ford,

Commander, Judge Advocate General's Corps, U.S. Navy, Federal Register Liaison Officer.

[FR Doc. 2014–26979 Filed 11–13–14; 8:45 am]

BILLING CODE 3810–FF–P

DEPARTMENT OF DEFENSE

Department of the Navy

32 CFR Part 706

Certifications and Exemptions Under the International Regulations for Preventing Collisions at Sea, 1972

AGENCY: Department of the Navy, DoD.

ACTION: Final rule.

SUMMARY: The Department of the Navy (DoN) is amending its certifications and exemptions under the International Regulations for Preventing Collisions at Sea, 1972 (72 COLREGS), to reflect that the Deputy Assistant Judge Advocate General (DAJAG) (Admiralty and Maritime Law) has determined that USS JACKSON (LCS 6) is a vessel of the Navy which, due to its special construction and purpose, cannot fully comply with certain provisions of the 72 COLREGS without interfering with its special function as a naval ship. The intended effect of this rule is to warn mariners in waters where 72 COLREGS apply.

DATES: This rule is effective November 14, 2014 and is applicable beginning October 22, 2014.

FOR FURTHER INFORMATION CONTACT: Commander Theron R. Korsak, JAGC, U.S. Navy, Admiralty Attorney, (Admiralty and Maritime Law), Office of the Judge Advocate General, Department of the Navy, 1322 Patterson Ave. SE., Suite 3000, Washington Navy Yard, DC 20374–5066, telephone number: 202–685–5040.

SUPPLEMENTARY INFORMATION: Pursuant to the authority granted in 33 U.S.C. 1605, the DoN amends 32 CFR Part 706.

This amendment provides notice that the DAJAG (Admiralty and Maritime Law), under authority delegated by the Secretary of the Navy, has certified that USS JACKSON (LCS 6) is a vessel of the Navy which, due to its special construction and purpose, cannot fully comply with the following specific provisions of 72 COLREGS without interfering with its special function as a naval ship: Annex I paragraph 2 (a)(i), pertaining to the location of the forward masthead light at a height not less than 12 meters above the hull; Annex I, paragraph 3(a), pertaining to the location of the forward masthead light in the forward quarter of the ship, and the horizontal distance between the forward and after masthead light; Annex I, paragraph 2(f)(i), pertaining to the placement of the masthead light or lights above and clear of all other lights and obstructions; Annex I, paragraph 3(c), pertaining to the task light's horizontal distance from the fore and aft centerline of the vessel in the athwartship direction. The DAJAG (Admiralty and Maritime Law) has also certified that the lights involved are located in closest possible compliance with the applicable 72 COLREGS requirements.

Moreover, it has been determined, in accordance with 32 CFR Parts 296 and 701, that publication of this amendment for public comment prior to adoption is impracticable, unnecessary, and contrary to public interest since it is based on technical findings that the placement of lights on this vessel in a manner differently from that prescribed herein will adversely affect the vessel's ability to perform its military functions.

List of Subjects in 32 CFR Part 706

Marine safety, Navigation (water), and Vessels.

For the reasons set forth in the preamble, the DoN amends part 706 of title 32 of the Code of Federal Regulations as follows:

PART 706—CERTIFICATIONS AND EXEMPTIONS UNDER THE INTERNATIONAL REGULATIONS FOR PREVENTING COLLISIONS AT SEA, 1972

■ 1. The authority citation for part 706 continues to read as follows:

Authority: 33 U.S.C. 1605.

■ 2. Section 706.2 is amended:

■ a. In Table One, by adding, in alphanumerical order, by vessel number, an entry for USS JACKSON (LCS 6);

■ b. In Table Four, under paragraph 15, add, in alphanumerical order, by vessel number, an entry for USS JACKSON (LCS 6);

■ c. In Table Four, under paragraph 16, add, in alphanumerical order, by vessel number, an entry for USS JACKSON (LCS 6); and

■ d. In Table Five, by adding, in alphanumerical order, by vessel number, an entry for USS JACKSON (LCS 6).

§ 706.2 Certifications of the Secretary of the Navy under Executive Order 11964 and 33 U.S.C. 1605.

* * * * *

TABLE ONE

Vessel	Number	Distance in meters of forward masthead light below minimum required height § 2(a)(i) Annex I
* * *	* * *	*
USS JACKSON	LCS 6	4.91
* * *	* * *	*

* * * * * 15. * * *

TABLE FOUR

Vessel	Number	Horizontal distances from the fore and aft centerline of the vessel in the athwartship direction (meters)
* * *	* * *	*
USS JACKSON	LCS 6	1.31

16. * * *

Vessel	Number	Obstruction angle relative ship's headings
* * *	* * *	*
USS JACKSON	LCS 6	71°–73° 76°–78°
* * *	* * *	*
		287°–289°

* * * * *

TABLE FIVE

Vessel	Number	Masthead lights not over all other lights and obstructions. annex I, sec. 2(f)	Forward masthead light not in forward quarter of ship. annex I, sec. 3(a)	After masthead light less than ½ ship's length aft of forward masthead light. annex I, sec. 3(a)	Percentage horizontal separation attained
* *	* *	*	*	*	*
USS JACKSON	LCS 6		X	X	18.6
* *	* *	*	*	*	*

Approved: October 22, 2014.

A. B. Fischer,

Captain, JAGC, U.S. Navy, Deputy Assistant Judge Advocate, General (Admiralty and Maritime Law).

Dated: November 7, 2014.

N. A. Hagerty-Ford,

Commander, Judge Advocate General's Corps, U.S. Navy, Federal Register Liaison Officer.

[FR Doc. 2014–27010 Filed 11–13–14; 8:45 am]

BILLING CODE 3810–FF–P

DEPARTMENT OF HOMELAND SECURITY

Coast Guard

33 CFR Part 117

[Docket No. USCG–2014–0912]

Drawbridge Operation Regulation; Lake Washington Ship Canal, Seattle, WA

AGENCY: Coast Guard, DHS.

ACTION: Notice of temporary deviation from regulations.

SUMMARY: The Coast Guard has issued a temporary deviation from the operating schedule that governs the Seattle Department of Transportation (SDOT) double leaf bascule Ballard Bridge across the Lake Washington Ship Canal, mile 1.1, at Seattle, WA. The requested deviation is to accommodate evening detoured commuter traffic during road construction. This deviation allows the bridge to remain in the closed position for an extra hour during evening traffic.

DATES: This deviation is effective from 4 p.m. until 7 p.m. daily Monday through Friday, excluding federal holidays, from November 19, 2014 until January 31, 2015.

ADDRESSES: The docket for this deviation, [USCG–2014–0912] is available at *http://www.regulations.gov.* Type the docket number in the ''SEARCH'' box and click ''SEARCH.'' Click on Open Docket Folder on the line associated with this deviation. You may also visit the Docket Management Facility in Room W12–140 on the ground floor of the Department of Transportation West Building, 1200 New Jersey Avenue SE., Washington, DC 20590, between 9 a.m. and 5 p.m., Monday through Friday, except Federal holidays.

FOR FURTHER INFORMATION CONTACT: If you have questions on this temporary deviation, call or email Mr. Steven Fischer, Bridge Administrator, Thirteenth Coast Guard District; telephone 206–220–7282, email *d13-pf-d13bridges@uscg.mil.* If you have questions on viewing the docket, call Cheryl Collins, Program Manager, Docket Operations, telephone 202–366–9826.

SUPPLEMENTARY INFORMATION: SDOT has requested a temporary deviation from the operating schedule for the Ballard Bridge, mile 1.1, crossing the Lake Washington Ship Canal at Seattle, WA. The requested deviation is to accommodate evening detoured commuter traffic during road construction. To facilitate timely efficient movement of highway traffic, the currently published drawbridge closure hours will be extended by one hour. The extended closure hours will be from 4 p.m. to 7 p.m. daily Monday through Friday, excluding federal holidays, from November 19, 2014 until January 31, 2015.

The Ballard Bridge, mile 1.1, provides a vertical clearance of 29 feet in the closed position; clearances are referenced to the mean water elevation of Lake Washington. The current operating schedule for the bridge is set out in 33 CFR 117.1051. The normal operating schedule for the Ballard Bridge states that the bridge need not open from 7 a.m. to 9 a.m. and from 4 p.m. to 6 p.m. Monday through Friday, except federal holidays but Columbus Day for vessels less than 1000 tons, unless the vessel has in tow a vessel of 1000 gross tons or more. The normal operating schedule for the bridge also requires one hour advance notification for bridge openings between 11 p.m. and 7 a.m. daily. Waterway usage on the Lake Washington Ship Canal ranges from commercial tug and barge to small pleasure craft. Vessels able to pass through the bridge in the closed positions may do so at anytime. The bridge will not be able to open for emergencies and there is no immediate alternate route for vessels to pass. The Coast Guard will also inform the users of the waterways through our Local and Broadcast Notices to Mariners of the change in operating schedule for the bridge so that vessels can arrange their transits to minimize any impact caused by the temporary deviation.

In accordance with 33 CFR 117.35(e), the drawbridge must return to its regular operating schedule immediately at the end of the designated time period. This deviation from the operating regulations is authorized under 33 CFR 117.35.

Dated: October 31, 2014.

Steven M. Fischer,

Bridge Administrator, Thirteenth Coast Guard District.

[FR Doc. 2014–27008 Filed 11–13–14; 8:45 am]

BILLING CODE 9110–04–P

DEPARTMENT OF HOMELAND SECURITY

Coast Guard

33 CFR Part 117

[Docket No. USCG–2014–0969]

Drawbridge Operation Regulation; Long Island, New York Inland Waterway From East Rockaway Inlet to Shinnecock Canal, Nassau, NY

AGENCY: Coast Guard, DHS.

ACTION: Notice of deviation from drawbridge regulation.

SUMMARY: The Coast Guard has issued a temporary deviation from the operating schedule that governs the operation of the Meadowbrook State Parkway Bridge, across Sloop Channel, mile 12.8, at Nassau, New York. This deviation is necessary to replace electrical components at the bridge. This deviation will allow the bridge to remain in the closed position for three partial days to facilitate scheduled bridge maintenance, the replacement of the electrical umbilical cords.

DATES: This deviation is effective between 8 a.m. and 11 a.m. from November 17, 2014 through November 21, 2014.

ADDRESSES: The docket for this deviation, [USCG–2014–0969] is available at *http://www.regulations.gov.* Type the docket number in the ''SEARCH'' box and click ''SEARCH.'' Click on Open Docket Folder on the line associated with this deviation. You may also visit the Docket Management Facility in Room W12–140, on the ground floor of the Department of Transportation West Building, 1200 New Jersey Avenue SE., Washington, DC, 20590, between 9 a.m. and 5 p.m., Monday through Friday, except Federal holidays.

FOR FURTHER INFORMATION CONTACT: If you have questions on this temporary deviation, call or email Ms. Judy Leung-Yee, Project Officer, First Coast Guard District, *judy.k.leung-yee@uscg.mil,* or (212) 514–4330. If you have questions on viewing the docket, call Cheryl Collins, Program Manager, Docket Operations, telephone (202) 366–9826.

SUPPLEMENTARY INFORMATION: The Meadowbrook State Parkway Bridge has a vertical clearance of 22 feet at mean high water, and 25 feet at mean low water in the closed position. The existing drawbridge operating regulations are found at 33 CFR 117.799(h). Sloop Channel has commercial and recreational vessel traffic of various sizes.

The bridge owner, New York State Department of Transportation, requested a three partial day bridge closure to facilitate the replacement of the electrical umbilical cords at the bridge.

Under this temporary deviation, the Meadowbrook State Parkway Bridge may remain in the closed position between 8 a.m. and 11 a.m. from November 17, 2014, through November 19, 2014. In the event of inclement weather, the rain dates will be from November 20, 2014 through November 21, 2014.

Vessels that can pass under the bridge in the closed position may do so at all times. There are no alternate routes. The bridge can be opened in the event of an emergency situation.

In accordance with 33 CFR 117.35(e), the drawbridge must return to its regular operating schedule immediately at the end of the effective period of this temporary deviation. This deviation from the operating regulations is authorized under 33 CFR 117.35.

Dated: October 31, 2014.

C.J. Bisignano,

Supervisory Bridge Management Specialist, First Coast Guard District.

[FR Doc. 2014–27011 Filed 11–13–14; 8:45 am]

BILLING CODE 9110–04–P

DEPARTMENT OF COMMERCE

Patent and Trademark Office

37 CFR Part 1

[Docket No.: PTO–P–2014–0001]

RIN 0651–AC92

Changes to Continued Prosecution Application Practice

AGENCY: United States Patent and Trademark Office, Commerce.

ACTION: Final rule.

SUMMARY: The Leahy-Smith America Invents Act (AIA) revised and streamlined the requirements for the inventor's oath or declaration. In implementing the AIA inventor's oath or declaration provisions, the United States Patent and Trademark Office (Office) provided that an applicant may postpone the filing of the inventor's oath or declaration until allowance if the applicant provides an application

data sheet indicating the name, residence, and mailing address of each inventor. The rules pertaining to continued prosecution applications (which are applicable only to design applications) require that the prior nonprovisional application of a continued prosecution application be complete, which requires that the prior nonprovisional application contain the inventor's oath or declaration. The Office published an interim rule on March 5, 2014, to revise the rules pertaining to continued prosecution applications to permit the filing of a continued prosecution application even if the prior nonprovisional application does not contain the inventor's oath or declaration so long as the continued prosecution application is filed on or after September 16, 2012, and the prior nonprovisional application contains an application data sheet indicating the name, residence, and mailing address of each inventor (continued prosecution application interim rule). The Office received no comments from the public in response to the continued prosecution application interim rule published on March 5, 2014. This final rule adopts as final the amendments to the rules of practice originally set forth in the continued prosecution application interim rule.

DATES: *Effective Date:* This final rule is effective on November 14, 2014. The continued prosecution application interim rule published on March 5, 2014 at 79 FR 12384 was effective on March 5, 2014.

FOR FURTHER INFORMATION CONTACT: Eugenia A. Jones, Senior Legal Advisor, Office of Patent Legal Administration, Office of the Deputy Commissioner for Patent Examination Policy, at (571) 272–7727.

SUPPLEMENTARY INFORMATION:

Executive Summary: Purpose: The previously published continued prosecution application interim rule permits the filing of a continued prosecution application even if the prior nonprovisional application does not contain the inventor's oath or declaration. *See Changes to Continued Prosecution Application Practice,* 79 FR 12384 (Mar. 5, 2014). The change in the continued prosecution application interim rule avoids the need for applicants to file the inventor's oath or declaration in an application in order to file a continued prosecution application of that application. This final rule adopts as final the amendments to the rules of practice originally set forth in the continued prosecution application interim rule.

Summary of Major Provisions: The previously published continued prosecution application interim rule provides that the prior nonprovisional application of a continued prosecution application that was filed on or after September 16, 2012, is not required to contain the inventor's oath or declaration so long as the prior nonprovisional application contains an application data sheet indicating the name, residence, and mailing address of each inventor. As discussed previously, this final rule adopts as final the amendments to the rules of practice originally set forth in the continued prosecution application interim rule.

Costs and Benefits: This rulemaking is not economically significant under Executive Order 12866 (Sept. 30, 1993).

Background: The Office revised the rules of practice pertaining to the inventor's oath or declaration during implementation of the AIA inventor's oath or declaration provisions to permit an applicant to postpone the filing of the inventor's oath or declaration until payment of the issue fee if the applicant provides an application data sheet indicating the name, residence, and mailing address of each inventor. *See Changes To Implement the Inventor's Oath or Declaration Provisions of the Leahy-Smith America Invents Act,* 77 FR 48776, 48779–80 (Aug. 14, 2012), and *Changes To Implement the Patent Law Treaty,* 78 FR 62367, 62376 (Oct. 21, 2013). The rules of practice pertaining to continued prosecution applications (which are applicable only to design applications) formerly required that the prior nonprovisional application of a continued prosecution application be a design application that is complete as defined by 37 CFR 1.51(b). *See* 37 CFR 1.53(d)(1)(ii) (2013) (required that the prior nonprovisional application of a continued prosecution application be a design application that is complete as defined by 37 CFR 1.51(b)). 37 CFR 1.51(b) in turn requires that an application contain the inventor's oath or declaration to be complete. *See* 37 CFR 1.51(b)(2). The continued prosecution application interim rule amends 37 CFR 1.53(d)(1)(ii) to permit the filing of a continued prosecution application even if the prior nonprovisional application does not contain the inventor's oath or declaration so long as the continued prosecution application is filed on or after September 16, 2012, and the prior nonprovisional application contains an application data sheet indicating the name, residence, and mailing address of each inventor. This change avoids the need for applicants to file the inventor's oath or declaration in an application in order to file a continued prosecution application of that application. This final rule adopts as final the amendments to the rules of practice originally set forth in the continued prosecution application interim rule.

Discussion of Specific Rules

The continued prosecution application interim rule published on March 5, 2014, amended § 1.53(d)(1)(ii) to change ''[t]he prior nonprovisional application is a design application that is complete as defined by § 1.51(b)'' to ''[t]he prior nonprovisional application is a design application that is complete as defined by § 1.51(b), except for the inventor's oath or declaration if the application is filed on or after September 16, 2012, and the prior nonprovisional application contains an application data sheet meeting the conditions specified in § 1.53(f)(3)(i).''

Comments: The Office received no comments in response to the continued prosecution application interim rule.

Rulemaking Considerations

A. Administrative Procedure Act: This final rule simply adopts as final changes in the continued prosecution application interim rule, which pertain to the procedures that apply to the filing of a continued prosecution application and do not change the substantive criteria of patentability. Therefore, the changes in this rulemaking involve rules of agency practice and procedure, and/or interpretive rules. *See JEM Broad. Co.* v. *FCC,* 22 F.3d 320, 326 (D.C. Cir. 1994) (''[T]he critical feature of the procedural exception [in 5 U.S.C. 553(b)(A)] is that it covers agency actions that do not themselves alter the rights or interests of parties, although [they] may alter the manner in which the parties present themselves or their viewpoints to the agency'') (quoting *Batterton* v. *Marshall,* 648 F.2d 694, 707 (D.C. Cir. 1980)); *see also Bachow Commc'ns Inc.* v. *FCC,* 237 F.3d 683, 690 (D.C. Cir. 2001) (rules governing an application process are procedural under the Administrative Procedure Act); *Inova Alexandria Hosp.* v. *Shalala,* 244 F.3d 342, 350 (4th Cir. 2001) (rules for handling appeals were procedural where they did not change the substantive standard for reviewing claims).

In addition, the Office, pursuant to authority at 5 U.S.C. 553(b)(3)(B), found good cause to adopt the changes in the continued prosecution application interim rule without prior notice and an opportunity for public comment, as such procedures would have been contrary to the public interest. Delay in the promulgation of the changes in the continued prosecution application

interim rule to provide notice and comment procedures would have caused harm to those applicants who file a continued prosecution application where the prior nonprovisional application does not contain the inventor's oath or declaration. Immediate implementation of the changes in the continued prosecution application interim rule was in the public interest because: (1) The public did not need time to conform its conduct as the changes in the continued prosecution application interim rule merely eased the requirements for filing a continued prosecution application; and (2) those applicants who were ineligible to file a continued prosecution application because the prior nonprovisional application does not contain the inventor's oath or declaration benefitted from the changes in the continued prosecution application interim rule. *See Nat'l Customs Brokers & Forwarders Ass'n* v. *U.S.,* 59 F.3d 1219, 1223–24 (Fed. Cir. 1995).

Accordingly, prior notice and opportunity for public comment was not required pursuant to 5 U.S.C. 553(b) or (c), 35 U.S.C. 2(b)(2)(B), or any other law. *See Cooper Techs. Co.* v. *Dudas,* 536 F.3d 1330, 1336–37 (Fed. Cir. 2008) (stating that 5 U.S.C. 553, and thus 35 U.S.C. 2(b)(2)(B), does not require notice and comment rulemaking for ''interpretative rules, general statements of policy, or rules of agency organization, procedure, or practice'') (quoting 5 U.S.C. 553(b)(A)). In addition, pursuant to authority at 5 U.S.C. 553(d)(1), the changes in the continued prosecution application interim rule were made immediately effective because they relieved restrictions in the requirements for filing a continued prosecution application.

B. Regulatory Flexibility Act: As prior notice and an opportunity for public comment are not required pursuant to 5 U.S.C. 553 or any other law, neither a regulatory flexibility analysis nor a certification under the Regulatory Flexibility Act (5 U.S.C. 601 *et seq.*) is required. *See* 5 U.S.C. 603.

C. Executive Order 12866 (Regulatory Planning and Review): This rulemaking has been determined to be not significant for purposes of Executive Order 12866 (Sept. 30, 1993).

D. Executive Order 13563 (Improving Regulation and Regulatory Review): The Office has complied with Executive Order 13563. Specifically, the Office has, to the extent feasible and applicable: (1) Made a reasoned determination that the benefits justify the costs of the rule; (2) tailored the rule to impose the least burden on society consistent with obtaining the regulatory objectives; (3) selected a regulatory approach that maximizes net benefits; (4) specified performance objectives; (5) identified and assessed available alternatives; (6) involved the public in an open exchange of information and perspectives among experts in relevant disciplines, affected stakeholders in the private sector and the public as a whole, and provided on-line access to the rulemaking docket; (7) attempted to promote coordination, simplification, and harmonization across government agencies and identified goals designed to promote innovation; (8) considered approaches that reduce burdens and maintain flexibility and freedom of choice for the public; and (9) ensured the objectivity of scientific and technological information and processes.

E. Executive Order 13132 (Federalism): This rulemaking does not contain policies with federalism implications sufficient to warrant preparation of a Federalism Assessment under Executive Order 13132 (Aug. 4, 1999).

F. Executive Order 13175 (Tribal Consultation): This rulemaking will not: (1) Have substantial direct effects on one or more Indian tribes; (2) impose substantial direct compliance costs on Indian tribal governments; or (3) preempt tribal law. Therefore, a tribal summary impact statement is not required under Executive Order 13175 (Nov. 6, 2000).

G. Executive Order 13211 (Energy Effects): This rulemaking is not a significant energy action under Executive Order 13211 because this rulemaking is not likely to have a significant adverse effect on the supply, distribution, or use of energy. Therefore, a Statement of Energy Effects is not required under Executive Order 13211 (May 18, 2001).

H. Executive Order 12988 (Civil Justice Reform): This rulemaking meets applicable standards to minimize litigation, eliminate ambiguity, and reduce burden as set forth in sections 3(a) and 3(b)(2) of Executive Order 12988 (Feb. 5, 1996).

I. Executive Order 13045 (Protection of Children): This rulemaking does not concern an environmental risk to health or safety that may disproportionately affect children under Executive Order 13045 (Apr. 21, 1997).

J. Executive Order 12630 (Taking of Private Property): This rulemaking will not affect a taking of private property or otherwise have taking implications under Executive Order 12630 (Mar. 15, 1988).

K. Congressional Review Act: Under the Congressional Review Act provisions of the Small Business Regulatory Enforcement Fairness Act of 1996 (5 U.S.C. 801 *et seq.*), prior to issuing any final rule, the United States Patent and Trademark Office will submit a report containing the rule and other required information to the United States Senate, the United States House of Representatives, and the Comptroller General of the Government Accountability Office. The changes in this final rule are not expected to result in an annual effect on the economy of 100 million dollars or more, a major increase in costs or prices, or significant adverse effects on competition, employment, investment, productivity, innovation, or the ability of United States-based enterprises to compete with foreign-based enterprises in domestic and export markets. Therefore, this final rule is not a ''major rule'' as defined in 5 U.S.C. 804(2).

L. Unfunded Mandates Reform Act of 1995: The changes set forth in this notice do not involve a Federal intergovernmental mandate that will result in the expenditure by State, local, and tribal governments, in the aggregate, of 100 million dollars (as adjusted) or more in any one year, or a Federal private sector mandate that will result in the expenditure by the private sector of 100 million dollars (as adjusted) or more in any one year, and will not significantly or uniquely affect small governments. Therefore, no actions are necessary under the provisions of the Unfunded Mandates Reform Act of 1995. *See* 2 U.S.C. 1501 *et seq.*

M. National Environmental Policy Act: This rulemaking will not have any effect on the quality of the environment and is thus categorically excluded from review under the National Environmental Policy Act of 1969. *See* 42 U.S.C. 4321 *et seq.*

N. National Technology Transfer and Advancement Act: The requirements of section 12(d) of the National Technology Transfer and Advancement Act of 1995 (15 U.S.C. 272 note) are not applicable because this rulemaking does not contain provisions which involve the use of technical standards.

O. Paperwork Reduction Act: The Paperwork Reduction Act of 1995 (44 U.S.C. 3501 *et seq.*) requires that the Office consider the impact of paperwork and other information collection burdens imposed on the public. This final rule involves information collection requirements which are subject to review by the Office of Management and Budget (OMB) under the Paperwork Reduction Act of 1995 (44 U.S.C. 3501–3549). This rulemaking

does not impose any additional collection requirements under the Paperwork Reduction Act which are subject to further review by OMB.

Notwithstanding any other provision of law, no person is required to respond to, nor shall a person be subject to a penalty for failure to comply with, a collection of information subject to the requirements of the Paperwork Reduction Act unless that collection of information displays a currently valid OMB control number.

List of Subjects in 37 CFR Part 1

Administrative practice and procedure, Courts, Freedom of Information, Inventions and patents, Reporting and recordkeeping requirements, Small Businesses.

■ For the reasons set forth in the preamble, the interim rule amending 37 CFR part 1 which was published at 79 FR 12384–12386 on March 5, 2014, is adopted as a final rule without change.

Dated: November 6, 2014.

Michelle K. Lee,

Deputy Under Secretary of Commerce for Intellectual Property and Deputy Director of the United States Patent and Trademark Office.

[FR Doc. 2014–27032 Filed 11–13–14; 8:45 am]

BILLING CODE 3510–16–P

DEPARTMENT OF COMMERCE

Patent and Trademark Office

37 CFR Part 1

[Docket No.: PTO–P–2014–0003]

RIN 0651–AC93

Changes To Permit Delayed Submission of Certain Requirements for Prioritized Examination

AGENCY: United States Patent and Trademark Office, Commerce.

ACTION: Final rule.

SUMMARY: The Leahy-Smith America Invents Act includes provisions for prioritized examination of patent applications (also referred to as ''Track I''), which have been implemented by the United States Patent and Trademark Office (Office) in previous rulemakings. The Office published an interim rule on March 5, 2014 (prioritized examination interim rule), to simplify the Track I prioritized examination practice to reduce the number of requests for prioritized examination that must be dismissed. In order to enable rapid processing and examination of those applications, the previous rulemakings provided that a request for Track I prioritized examination requires, upon filing of the application, an inventor's oath or declaration and all required fees, and that the application contain no more than four independent claims, thirty total claims, and no multiple dependent claims. If a request for Track I prioritized examination failed to meet these requirements on filing, then the request was dismissed. After operating under the previous rulemakings for some time, the Office determined that the time period for meeting the identified requirements could be expanded and still enable the Office to timely examine the patent application. Hence, on March 5, 2014, the Office published the prioritized examination interim rule to expand the time period for meeting the identified requirements. The Office received no comments from the public in response. This final rule adopts as final the amendments to the rules of practice originally set forth in the prioritized examination interim rule.

DATES: *Effective Date:* This final rule is effective on November 14, 2014. The prioritized examination interim rule published on March 5, 2014 at 79 FR 12386 was effective on March 5, 2014.

Applicability Date: The changes to 37 CFR 1.102 apply only to applications filed under 35 U.S.C. 111(a) on or after September 16, 2012, in which a first action has not been mailed.

FOR FURTHER INFORMATION CONTACT: John R. Cottingham, Director, Office of Petitions, at (571) 272–7079, or Michael T. Cygan, Senior Legal Advisor, Office of Patent Legal Administration, at (571) 272–7700.

SUPPLEMENTARY INFORMATION:

Executive Summary: Purpose: The prioritized examination interim rule simplified prioritized examination (''Track I'') practice to reduce the number of requests for prioritized examination that must be dismissed and to improve access to prioritized examination. This final rule adopts as final the amendments to the rules of practice originally set forth in the prioritized examination interim rule.

Summary of Major Provisions: The prioritized examination provisions (37 CFR 1.102(e)) formerly required that: (1) The inventor's oath or declaration be present on filing; (2) all fees be paid upon filing; and (3) the application as filed contain no more than four independent claims, no more than thirty total claims, and no multiple dependent claims. The prioritized examination interim rule revised 37 CFR 1.102(e) to provide that: (1) The filing of an inventor's oath or declaration may be postponed in accordance with 37 CFR 1.53(f)(3) if an application data sheet meeting the conditions specified in 37 CFR 1.53(f)(3)(i) is present upon filing; (2) if an application contains more than four independent claims, more than thirty total claims, or any multiple dependent claim, the applicant is given a non-extendable one-month period to file an amendment to cancel any independent claims in excess of four, any total claims in excess of thirty, and any multiple dependent claim; and (3) any excess claims fees due under 37 CFR 1.16(h), (i), or (j) and any application size fee due under 37 CFR 1.16(s) is not required to be paid on filing. This final rule adopts as final the amendments to the rules of practice originally set forth in the prioritized examination interim rule.

Costs and Benefits: This rulemaking is not economically significant under Executive Order 12866 (Sept. 30, 1993).

Background: Section 11(h) of the Leahy-Smith America Invents Act provides for prioritized examination of an application. *See* Public Law 112–29, 125 Stat. 283, 324 (2011). Section 11(h) of the Leahy-Smith America Invents Act also provides that the Office may by regulation prescribe conditions for acceptance of a request for prioritized examination. *See id.*

The Office implemented the Leahy-Smith America Invents Act prioritized examination provision for applications upon filing, referred to as ''Track I,'' in a final rule published on September 23, 2011. *See Changes to Implement the Prioritized Examination Track (Track I) of the Enhanced Examination Timing Control Procedures under the Leahy-Smith America Invents Act,* 76 FR 59050 (September 23, 2011). The Office subsequently implemented prioritized examination for pending applications after the filing of a proper request for continued examination under 35 U.S.C. 132(b) and 37 CFR 1.114. *See Changes to Implement the Prioritized Examination for Requests for Continued Examination,* 76 FR 78566 (December 19, 2011).

The rule implementing prioritized examination, 37 CFR 1.102(e), sets forth the requirements that must be met to permit a request for prioritized examination to be granted. These requirements were selected after public discussion with, and feedback from, patent practitioners and stakeholders. These requirements were selected in such a manner as to permit the Office to examine applications undergoing prioritized examination in a timely manner. In furtherance of timely examination, the Office required that requests for Track I prioritized examination conform to all of the requirements listed in 37 CFR

1.102(e)(1) as of the filing date of the application.

Upon review of the implementation of the Track I program, the Office has found that an unexpected number of requests for prioritized examination were being dismissed for failure to meet the requirements of 37 CFR 1.102(e) upon filing. In order to improve access to prioritized examination, the Office reevaluated the necessity for each requirement to be met upon filing. The Office published the prioritized examination interim rule simplifying the Track I prioritized examination practice as the Office determined that permitting certain requirements to be met after the filing date of the application would avoid dismissal of bona fide attempts to request Track I prioritized examination and result in only minimal delay in the processing of the Track I request and the subsequent examination.

Under the procedure set forth in the prioritized examination interim rule, the requirements for prioritized examination now permit an applicant to postpone submission of an inventor's oath and declaration after the filing date of the application, so long as the application as filed includes an executed application data sheet meeting the conditions specified in 37 CFR 1.53(f)(3)(i). Additionally, where a request for prioritized examination is received for an application having more than four independent claims, more than thirty total claims, or any multiple dependent claim, the Office notifies the applicant and provides a non-extendable period of one month in which the applicant may cancel or amend the claims accordingly. If the applicant provides the required claim amendment or cancellation within the one-month period, the Track I request is considered again. If the applicant fails to place the application in conformance with the above-listed claim requirements within that period, no further corrective period is given, and the Track I request is dismissed.

Under the procedure set forth in the prioritized examination interim rule, any excess claims fees due under 37 CFR 1.16(h), (i), or (j) and any application size fee due under 37 CFR 1.16(s) are not required to be paid on filing. An application in which excess claims fees or the application size fee are outstanding is treated under the provisions of 37 CFR 1.53(f)(4), which require that those fees be paid prior to the expiration of the time period set for reply by the Office in any notice of fee deficiency.

Discussion of Specific Rules

This final rule adopts as final the amendments to §§ 1.102 originally set forth in the prioritized examination interim rule. The following is a discussion of the amendments to Title 37 of the Code of Federal Regulations, Part 1, in the prioritized examination interim rule.

Section 1.102: The prioritized examination interim rule amended § 1.102(e)(1) to eliminate the requirement that the inventor's oath or declaration be submitted on the filing date. An application having a properly executed application data sheet that meets the requirements set forth in § 1.53(f)(3)(i) is eligible for prioritized examination (provided that the conditions of § 1.102(e) as revised in the prioritized examination interim rule are met). Pursuant to § 1.41(b), such an application data sheet sets the inventorship for the application, and the applicant may delay submission of the inventor's oath or declaration no later than the date on which the issue fee for the patent is paid. *See Changes To Implement the Inventor's Oath or Declaration Provisions of the Leahy-Smith America Invents Act,* 77 FR 48776, 48779–80 (Aug. 14, 2012), and *Changes to Implement the Patent Law Treaty,* 78 FR 62367, 62376 (Oct. 21, 2013). Accordingly, the prioritized examination interim rule amended § 1.102(e)(1) to provide that the application must include a specification as prescribed by 35 U.S.C. 112 including at least one claim, a drawing when necessary, and the inventor's oath or declaration on filing, except that the filing of an inventor's oath or declaration may be postponed in accordance with § 1.53(f)(3) if an application data sheet meeting the conditions specified in § 1.53(f)(3)(i) is present upon filing.

The prioritized examination interim rule also amended § 1.102(e)(1) to eliminate the requirements that an application include any excess claims fees due under § 1.16(h), (i), or (j) or any application size fee due under § 1.16(s) on filing. An application in which excess claims fees or the application size fee are outstanding is treated under the provisions of § 1.53(f)(4), which require that those fees be paid prior to the expiration of the time period set for reply by the Office in any notice of fee deficiency in order to avoid abandonment.

The prioritized examination interim rule further amended § 1.102(e)(1) to eliminate the requirements that an application not contain more than four independent claims, not contain more than thirty total claims, and not contain any multiple dependent claim upon filing. Upon review of the Track I request, the Office will provide the applicant a non-extendable one-month period in which to submit an amendment cancelling claims, or removing multiple dependencies. If, upon expiration of that one-month period, the application still contains more than four independent claims, more than thirty total claims, or a multiple dependent claim, the request for prioritized examination will be dismissed.

Section 1.102(e)(1) maintains the requirement that an application for which prioritized examination is requested must include payment of the basic filing fee, the search fee, and examination fees on filing, or the application will be ineligible for Track I. Specifically, § 1.102(e)(1) continues to require that if the application is a utility application, it must be filed via the Office's electronic filing system and include the filing fee under § 1.16(a), search fee under § 1.16(k), and examination fee under § 1.16(o) upon filing. Section 1.102(e)(1) also continues to require that if the application is a plant application, it must include the filing fee under § 1.16(c), search fee under § 1.16(m), and examination fee under § 1.16(q) upon filing.

Section 1.102(e) further maintains the requirement that an application for which prioritized examination is sought must be accompanied by the prioritized examination fee set forth in § 1.17(c), the processing fee set forth in § 1.17(i)(1), and the publication fee set forth in § 1.18(d). The request and each of these fees must be present on the same day the application is filed, or the application is ineligible for Track I.

The prioritized examination interim rule, while providing additional time for the filing of an inventor's oath or declaration, for payment of any excess claims fees or any application size fee, and for filing an amendment to limit an application to four independent claims and thirty total claims without any multiple dependent claim, does not remove the requirement that those items be filed within the appropriate time period. Applicants are reminded that any request for an extension of time will cause an outstanding Track I request to be dismissed, or cause an application to lose its Track I status if previously conferred upon that application. *See Changes to Implement the Prioritized Examination Track (Track I) of the Enhanced Examination Timing Control Procedures under the Leahy-Smith America Invents Act,* 76 FR 59050, 59051 (September 23, 2011).

To reduce delays in processing the application, the Office recommends that all of the requirements under § 1.102(e)(1) be met upon filing. An applicant should not delay meeting a requirement merely because an additional time period will be supplied. Applicants should recognize that the twelve-month goal for final disposition of the application is measured from the time the Track I request is granted, not from the filing of the application. As an applicant is seeking Track I prioritized examination to receive rapid examination, any delay in meeting the requirements for Track I merely adds processing time onto the twelve-month goal for final disposition of the application.

The changes in the prioritized examination interim rule apply to any application filed under 35 U.S.C. 111(a) on or after September 16, 2012, in which a first action has not been mailed. An applicant may have previously submitted a Track I request which was dismissed, but would have been granted, or the applicant would have been provided additional time to meet a requirement, if the changes to the interim rule had been in effect at the time of the dismissal. An applicant may file a request for reconsideration of the dismissal of the previous Track I request based upon the changes set forth in this interim rule if: (1) The application is still pending; (2) the application contains, or has been amended to contain, no more than four independent claims, no more than thirty total claims, and no multiple dependent claims; and (3) a first Office action has not been mailed in the application. Any such petition should be directed to the Office of Petitions.

Comments: The Office received no comments in response to the prioritized examination interim rule.

Rulemaking Considerations

A. Administrative Procedure Act: This final rule simply adopts as final changes in the prioritized examination interim rule, which pertain to the procedures that an applicant must follow in requesting Track I prioritized examination and do not change the substantive criteria of patentability. Therefore, the changes in this rulemaking involve rules of agency practice and procedure, and/or interpretive rules. *See JEM Broad. Co.* v. *FCC,* 22 F.3d 320, 326 (D.C. Cir. 1994) (''[T]he critical feature of the procedural exception [in 5 U.S.C. 553(b)(A)] is that it covers agency actions that do not themselves alter the rights or interests of parties, although [they] may alter the manner in which the parties present themselves or their viewpoints to the agency'') (quoting *Batterton* v. *Marshall,* 648 F.2d 694, 707 (D.C. Cir. 1980)); *see also Bachow Commc'ns Inc.* v. *FCC,* 237 F.3d 683, 690 (D.C. Cir. 2001) (rules governing an application process are procedural under the Administrative Procedure Act); *Inova Alexandria Hosp.* v. *Shalala,* 244 F.3d 342, 350 (4th Cir. 2001) (rules for handling appeals were procedural where they did not change the substantive standard for reviewing claims).

In addition, the Office, pursuant to authority at 5 U.S.C. 553(b)(3)(B), found good cause to adopt the changes in the prioritized examination interim rule without prior notice and an opportunity for public comment, as such procedures would have been contrary to the public interest. Delay in the promulgation of the prioritized examination interim rule to provide prior notice and comment procedures would have caused harm to those applicants who filed a request for Track I prioritized examination in an application that did not contain the inventor's oath or declaration, did not include all required fees on filing, or that contained more than four independent claims, more than thirty total claims, or a multiple dependent claim. Immediate implementation of the changes in the prioritized examination interim rule was in the public interest because: (1) The public did not need time to conform its conduct as the changes in the prioritized examination interim rule did not add any additional requirement for requesting prioritized examination of an application; and (2) those applicants who were ineligible for prioritized examination due to the previously stated reasons benefited from the changes in the prioritized examination interim rule. *See Nat'l Customs Brokers & Forwarders Ass'n* v. *U.S.,* 59 F.3d 1219, 1223–24 (Fed. Cir. 1995).

Accordingly, prior notice and opportunity for public comment were not required pursuant to 5 U.S.C. 553(b) or (c) (or any other law). *See Cooper Techs. Co.* v. *Dudas,* 536 F.3d 1330, 1336–37 (Fed. Cir. 2008) (stating that 5 U.S.C. 553, and thus 35 U.S.C. 2(b)(2)(B), does not require notice and comment rulemaking for ''interpretative rules, general statements of policy, or rules of agency organization, procedure, or practice'') (quoting 5 U.S.C. 553(b)(A)). In addition, pursuant to authority at 5 U.S.C. 553(d)(1), the changes in the prioritized examination interim rule were made immediately effective because they relieved restrictions in the requirements for requesting prioritized examination of an application.

B. Regulatory Flexibility Act: As prior notice and an opportunity for public comment were not required pursuant to 5 U.S.C. 553, or any other law, neither a regulatory flexibility analysis nor a certification under the Regulatory Flexibility Act (5 U.S.C. 601 *et seq.*) is required. *See* 5 U.S.C. 603.

C. Executive Order 12866 (Regulatory Planning and Review): This rulemaking has been determined to be not significant for purposes of Executive Order 12866 (Sept. 30, 1993).

D. Executive Order 13563 (Improving Regulation and Regulatory Review): The Office has complied with Executive Order 13563. Specifically, the Office has, to the extent feasible and applicable: (1) Made a reasoned determination that the benefits justify the costs of the rule; (2) tailored the rule to impose the least burden on society consistent with obtaining the regulatory objectives; (3) selected a regulatory approach that maximizes net benefits; (4) specified performance objectives; (5) identified and assessed available alternatives; (6) involved the public in an open exchange of information and perspectives among experts in relevant disciplines, affected stakeholders in the private sector and the public as a whole, and provided on-line access to the rulemaking docket; (7) attempted to promote coordination, simplification, and harmonization across government agencies and identified goals designed to promote innovation; (8) considered approaches that reduce burdens and maintain flexibility and freedom of choice for the public; and (9) ensured the objectivity of scientific and technological information and processes.

E. Executive Order 13132 (Federalism): This rulemaking does not contain policies with federalism implications sufficient to warrant preparation of a Federalism Assessment under Executive Order 13132 (Aug. 4, 1999).

F. Executive Order 13175 (Tribal Consultation): This rulemaking will not: (1) Have substantial direct effects on one or more Indian tribes; (2) impose substantial direct compliance costs on Indian tribal governments; or (3) preempt tribal law. Therefore, a tribal summary impact statement is not required under Executive Order 13175 (Nov. 6, 2000).

G. Executive Order 13211 (Energy Effects): This rulemaking is not a significant energy action under Executive Order 13211 because this rulemaking is not likely to have a significant adverse effect on the supply, distribution, or use of energy. Therefore, a Statement of Energy Effects is not

required under Executive Order 13211 (May 18, 2001).

H. Executive Order 12988 (Civil Justice Reform): This rulemaking meets applicable standards to minimize litigation, eliminate ambiguity, and reduce burden as set forth in sections 3(a) and 3(b)(2) of Executive Order 12988 (Feb. 5, 1996).

I. Executive Order 13045 (Protection of Children): This rulemaking does not concern an environmental risk to health or safety that may disproportionately affect children under Executive Order 13045 (Apr. 21, 1997).

J. Executive Order 12630 (Taking of Private Property): This rulemaking will not affect a taking of private property or otherwise have taking implications under Executive Order 12630 (Mar. 15, 1988).

K. Congressional Review Act: Under the Congressional Review Act provisions of the Small Business Regulatory Enforcement Fairness Act of 1996 (5 U.S.C. 801 *et seq.*), prior to issuing any final rule, the United States Patent and Trademark Office will submit a report containing the rule and other required information to the United States Senate, the United States House of Representatives, and the Comptroller General of the Government Accountability Office. The changes in this rulemaking are not expected to result in an annual effect on the economy of 100 million dollars or more, a major increase in costs or prices, or significant adverse effects on competition, employment, investment, productivity, innovation, or the ability of United States-based enterprises to compete with foreign-based enterprises in domestic and export markets. Therefore, this final rule is not a ''major rule'' as defined in 5 U.S.C. 804(2).

L. Unfunded Mandates Reform Act of 1995: The changes set forth in this rulemaking do not involve a Federal intergovernmental mandate that will result in the expenditure by State, local, and tribal governments, in the aggregate, of 100 million dollars (as adjusted) or more in any one year, or a Federal private sector mandate that will result in the expenditure by the private sector of 100 million dollars (as adjusted) or more in any one year, and will not significantly or uniquely affect small governments. Therefore, no actions are necessary under the provisions of the Unfunded Mandates Reform Act of 1995. *See* 2 U.S.C. 1501 *et seq.*

M. National Environmental Policy Act: This rulemaking will not have any effect on the quality of the environment and is thus categorically excluded from review under the National Environmental Policy Act of 1969. *See* 42 U.S.C. 4321 *et seq.*

N. National Technology Transfer and Advancement Act: The requirements of section 12(d) of the National Technology Transfer and Advancement Act of 1995 (15 U.S.C. 272 note) are not applicable because this rulemaking does not contain provisions which involve the use of technical standards.

O. Paperwork Reduction Act: The Paperwork Reduction Act of 1995 (44 U.S.C. 3501 *et seq.*) requires that the Office consider the impact of paperwork and other information collection burdens imposed on the public. This rulemaking involves information collection requirements which are subject to review by the Office of Management and Budget (OMB) under the Paperwork Reduction Act of 1995 (44 U.S.C. 3501–3549). An applicant who wishes to participate in the prioritized examination program must submit a certification and request to participate in the prioritized examination program, preferably by using Form PTO/AIA/424. OMB has determined that, under 5 CFR 1320.3(h), Form PTO/AIA/424 does not collect ''information'' within the meaning of the Paperwork Reduction Act of 1995. This rule making does not impose any additional collection requirements under the Paperwork Reduction Act which are subject to further review by OMB.

Notwithstanding any other provision of law, no person is required to respond to, nor shall a person be subject to a penalty for failure to comply with, a collection of information subject to the requirements of the Paperwork Reduction Act unless that collection of information displays a currently valid OMB control number.

List of Subjects in 37 CFR Part 1

Administrative practice and procedure, Courts, Freedom of information, Inventions and patents, Reporting and recordkeeping requirements, Small businesses.

■ For the reasons set forth in the preamble, the interim rule amending 37 CFR part 1 which was published at 79 FR 12386–12390 on March 5, 2014, is adopted as a final rule without change.

Dated: November 6, 2014.

Michelle K. Lee,

Deputy Under Secretary of Commerce for Intellectual Property and Deputy Director of the United States Patent and Trademark Office.

[FR Doc. 2014–27037 Filed 11–13–14; 8:45 am]

BILLING CODE 3510–16–P

DEPARTMENT OF VETERANS AFFAIRS

38 CFR Part 12

RIN 2900–AO41

Designee for Patient Personal Property

AGENCY: Department of Veterans Affairs.

ACTION: Final rule.

SUMMARY: The Department of Veterans Affairs (VA) is amending its regulation that governs a competent veteran's designation of a person to receive the veteran's funds and personal effects in the event that such veteran was to die while in a VA field facility. We are eliminating reference to an obsolete VA form, clarifying the role of a VA fiduciary for an incompetent veteran-patient, as well as restructuring the current regulation for ease of readability.

DATES: This final rule is effective December 15, 2014.

FOR FURTHER INFORMATION CONTACT: Kristin J. Cunningham, Director, Business Policy, Chief Business Office (10NB6), Veterans Health Administration, Department of Veterans Affairs, 810 Vermont Ave. NW., Washington, DC 20420; (202) 382–2508. (This is not a toll-free number.)

SUPPLEMENTARY INFORMATION: In a document published in the **Federal Register** at 78 FR 63139 (October 23, 2013), VA proposed to amend its regulation concerning the disposition of a veteran's funds and effects. We proposed several changes to 38 U.S.C. part 12. We proposed that, if a competent veteran who is receiving VA medical care dies in a VA field facility, any funds and personal effects belonging to the veteran must be turned over to the person who had been designated by the veteran upon admission to such VA field facility. VA requests and encourages a competent veteran to designate an individual and provide the facility with the individual's information in order to facilitate the process of disposition of the veteran's funds and personal effects in the event of his or her death, and to help alleviate some of the burden on the deceased veteran's survivors. VA currently requests a veteran to name a designee during the registration process when VA admits a veteran for care at a VA field facility and the designee information is recorded by VA personnel directly into the veteran's medical record. However, having a VA employee enter the designee into the veteran's medical record without having a signed written designation by the

veteran increases the risk for litigation against VA by the veteran's survivors. In order to reduce the risk of litigation, we proposed to create a new VA form. On said form, the veteran will designate an individual to receive the veteran's funds and effects in the event that such veteran was to die while receiving VA medical care. We also proposed to allow designation of certain family members who could not be designees under the regulation before this amendment, but continued to disallow as a possible designee a VA employee who is not a member of the veteran's family to avoid any potential for impropriety or the appearance thereof. Finally, we proposed certain revisions to improve readability and otherwise updated the regulatory text.

We provided a 60-day comment period, which ended on December 23, 2013. We did not receive any comments on the proposed rule. Based on the rationale set forth in the Supplementary Information to the proposed rule and in this final rule, VA is adopting the proposed rule as a final rule with no changes.

Effect of Rulemaking

Title 38 of the Code of Federal Regulations, as revised by this final rulemaking, represents VA's implementation of its legal authority on this subject. Other than future amendments to this regulation or governing statutes, no contrary guidance or procedures are authorized. All existing or subsequent VA guidance must be read to conform with this rulemaking if possible or, if not possible, such guidance is superseded by this rulemaking.

Paperwork Reduction Act

The Paperwork Reduction Act of 1995 (44 U.S.C. 3507) requires that VA consider the impact of paperwork and other information collection burdens imposed on the public. Under 44 U.S.C. 3507(a), an agency may not collect or sponsor the collection of information, nor may it impose an information collection requirement unless it displays a currently valid Office of Management and Budget (OMB) control number. See also 5 CFR 1320.8(b)(3)(vi).

This final rule imposes the following new information collection requirements. The information required in § 12.1 allows the veteran, upon admission to a VA field facility, to designate a person to receive the veteran's funds or effects in the event that the veteran dies while admitted to such VA field facility. The information required in § 12.1 would also allow the veteran to change or revoke such designee. If the veteran dies in a VA field facility, any funds or personal effects belonging to the veteran must be turned over to a person designated by the veteran. VA requests and encourages a veteran to name a person as a designee in order to facilitate the process of disposition of the veteran's funds and effects. VA also allows the veteran the opportunity to change or revoke such designee at any time. The information obtained through this collection eliminates some of the burden on the deceased veteran's survivors in the event of the veteran's death in a VA field facility. As required by 44 U.S.C. 3507(d), VA submitted this information collection to OMB for its review, and the information collection is pending OMB approval. Notice of OMB approval for this information collection will be published in a future **Federal Register** document. Until VA receives approval from OMB for the information collection, VA will not collect information associated with this rulemaking. The public is not required to respond to the information collection associated with this rulemaking until OMB approves the information collection.

Regulatory Flexibility Act

The Secretary hereby certifies that this final rule will not have a significant economic impact on a substantial number of small entities as they are defined in the Regulatory Flexibility Act, 5 U.S.C. 601–612. This final rule will directly affect only individuals and will not directly affect small entities. Therefore, pursuant to 5 U.S.C. 605(b), this rulemaking is exempt from the initial and final regulatory flexibility analysis requirements of sections 603 and 604.

Executive Orders 12866 and 13563

Executive Orders 12866 and 13563 direct agencies to assess the costs and benefits of available regulatory alternatives and, when regulation is necessary, to select regulatory approaches that maximize net benefits (including potential economic, environmental, public health and safety effects, and other advantages; distributive impacts; and equity). Executive Order 13563 (Improving Regulation and Regulatory Review) emphasizes the importance of quantifying both costs and benefits, reducing costs, harmonizing rules, and promoting flexibility. Executive Order 12866 (Regulatory Planning and Review) defines a ''significant regulatory action,'' which requires review by OMB unless OMB waives such review, as ''any regulatory action that is likely to result in a rule that may: (1) Have an annual effect on the economy of $100 million or more or adversely affect in a material way the economy, a sector of the economy, productivity, competition, jobs, the environment, public health or safety, or State, local, or tribal governments or communities; (2) Create a serious inconsistency or otherwise interfere with an action taken or planned by another agency; (3) Materially alter the budgetary impact of entitlements, grants, user fees, or loan programs or the rights and obligations of recipients thereof; or (4) Raise novel legal or policy issues arising out of legal mandates, the President's priorities, or the principles set forth in this Executive Order.''

The economic, interagency, budgetary, legal, and policy implications of this regulatory action have been examined, and it has been determined not to be a significant regulatory action under Executive Order 12866. VA's impact analysis can be found as a supporting document at *http://www.regulations.gov*, usually within 48 hours after the rulemaking document is published. Additionally, a copy of the rulemaking and its impact analysis are available on VA's Web site at *http://www.va.gov/orpm/*. by following the link for VA Regulations Published From FY 2004 Through Fiscal Year to Date.

Unfunded Mandates

The Unfunded Mandates Reform Act of 1995 requires, at 2 U.S.C. 1532, that agencies prepare an assessment of anticipated costs and benefits before issuing any rule that may result in the expenditure by State, local, and tribal governments, in the aggregate, or by the private sector, of $100 million or more (adjusted annually for inflation) in any 1 year. This final rule will have no such effect on State, local, and tribal governments, or on the private sector.

Catalog of Federal Domestic Assistance

The Catalog of Federal Domestic Assistance numbers and titles for the programs affected by this document are 64.007, Blind Rehabilitation Centers; 64.008, Veterans Domiciliary Care; 64.009, Veterans Medical Care Benefits; 64.010, Veterans Nursing Home Care; 64.019, Veterans Rehabilitation—Alcohol and Drug Dependence.

Signing Authority

The Secretary of Veterans Affairs, or designee, approved this document and authorized the undersigned to sign and submit the document to the Office of the Federal Register for publication electronically as an official document of

the Department of Veterans Affairs. Jose D. Riojas, Chief of Staff, Department of Veterans Affairs, approved this document on November 4, 2014, for publication.

List of Subjects in 38 CFR Part 12

Estates, Veterans.

Dated: November 10, 2014.

Janet J. Coleman,

Chief, Regulations Development, Tracking, and Control, Office of Regulation Policy & Management, Office of the General Counsel, U.S. Department of Veterans Affairs.

For the reasons set out in the preamble, the Department of Veterans Affairs amends 38 CFR part 12 as follows:

PART 12—DISPOSITION OF VETERAN'S PERSONAL FUNDS AND EFFECTS

■ 1. The authority citation for part 12 is revised to read as follows:

Authority: 38 U.S.C. 501, 8501–8528.

§ 12.0 [Amended]

■ 2. Amend § 12.0 paragraph (b) by removing the phrase ''funds derived from gratuitous benefits under laws administered by the Department of Veterans Affairs'' and adding, in its place, ''funds derived from VA benefits''.

■ 3. Revise § 12.1 to read as follows:

§ 12.1 Designee cases; competent veterans.

(a) *Designees—general.* (1) Upon admission to a VA field facility, VA will request and encourage a competent veteran to designate in writing, on the relevant VA form, an individual to whom VA will deliver the veteran's funds and effects in the event of the veteran's death in such VA field facility. The individual named by the veteran is referred to in this part as the designee.

(2) The veteran may change or revoke a designation in writing, on the relevant VA form, at any time.

(3) If the veteran does not name a designee or if a designee is unable or unwilling to accept delivery of funds or effects, § 12.5 Nondesignee cases, applies.

(4) The designee may not be a VA employee unless such employee is a member of the veteran's family. For purposes of this section, a family member includes the spouse, parent, child, step family member, extended family member or an individual who lives with the veteran but is not a member of the veteran's family.

(5) To be effective, a completed form must be received by the facility head or facility designee prior to the veteran's death.

(b) *Delivery of funds and effects.* The delivery of the veteran's funds or effects to the designee is only a delivery of possession. Such delivery of possession does not affect in any manner:

(1) The title to such funds or effects; or

(2) The person legally entitled to ownership of such funds or effects.

(c) *Veteran becomes incompetent.* If a veteran is determined to be incompetent pursuant to an order of a state court or is determined to be unable to manage monetary VA benefits by a VA clinician after the veteran is admitted to a VA field facility, the VA field facility staff will contact the Veterans Benefits Administration for the application of 38 CFR 3.353, regarding an incompetency rating as to whether the veteran is able to manage monetary VA benefits, and, if appropriate, 38 CFR 13.55, regarding VA fiduciary appointments. If the Veterans Benefits Administration determines that a veteran is incompetent to manage monetary VA benefits, any designation by the veteran under paragraph (a) of this section will cease with respect to VA benefits that are deposited by VA into the Personal Funds of Patients. The veteran's designation will not change with respect to disposition of funds and personal effects derived from non-VA sources, unless a court-appointed guardian or conservator changes or revokes the existing designation.

(d) *Retention of funds and effects by a veteran.* Upon admission to a VA field facility, VA will encourage a competent veteran to:

(1) Place articles of little or no use to the veteran during the period of care in the custody of a family member or friend; and

(2) Retain only such funds and effects that are actually required and necessary for the veteran's immediate convenience.

(The information collection is pending Office of Management and Budget approval.)

(Authority: 38 U.S.C. 8502)

§ 12.2 [Amended]

■ 4. In § 12.2 amend paragraph (a) by removing the phrase ''funds deposited by the Department of Veterans Affairs in Personal Funds of Patients which were derived from gratuitous benefits under laws administered by the Department of Veterans Affairs'' and adding, in its place, ''funds deposited by VA in Personal Funds of Patients that were derived from VA benefits''.

§ 12.3 [Amended]

■ 5. In § 12.3 amend paragraph (a)(1) by removing the phrase ''funds deposited by the Department of Veterans Affairs in Personal Funds of Patients which were derived from gratuitous benefits under laws administered by the Department of Veterans Affairs'' and adding, in its place, ''funds deposited by VA in Personal Funds of Patients that were derived from VA benefits,'' and by removing the word ''gratuitous'' and adding, in its place ''VA''.

§ 12.4 [Amended]

■ 6. Amend § 12.4 by:

■ a. In paragraph (a) introductory text, removing the phrase ''funds on deposit in Personal Funds of Patients derived from gratuitous benefits under laws administered by the Department of Veterans Affairs and deposited by the Department of Veterans Affairs'' and adding, in its place, ''funds deposited by VA in Personal Funds of Patients that were derived from VA benefits''.

■ b. In paragraph (d), removing the phrase ''funds deposited by the Department of Veterans Affairs in Personal Funds of Patients derived from gratuitous benefits under laws administered by the Department of Veterans Affairs'' and adding, in its place, ''funds deposited by VA in Personal Funds of Patients that were derived from VA benefits''.

§ 12.5 [Amended]

■ 7. Amend § 12.5 by:

■ a. In paragraph (c), removing the phrase ''gratuitous benefits deposited by the Department of Veterans Affairs in Personal Funds of Patients under laws administered by the Department of Veterans Affairs'' and adding, in its place, ''funds deposited by VA in Personal Funds of Patients that were derived from VA benefits''.

■ b. In paragraph (d), removing the phrase ''gratuitous benefits under laws administered by the Department of Veterans Affairs'' and adding, in its place, ''VA benefits''; and removing ''funds derived from gratuitous'' and adding, in its place, ''funds derived from VA''.

[FR Doc. 2014–26953 Filed 11–13–14; 8:45 am]

BILLING CODE 8320–01–P

DEPARTMENT OF VETERANS AFFAIRS

38 CFR Part 17

RIN 2900–AO93

Technical Corrections to Medical Regulations Based on Veterans' Health Care Eligibility Reform Act of 1996

AGENCY: Department of Veterans Affairs.

ACTION: Final rule.

SUMMARY: The Department of Veterans Affairs (VA) is amending its medical regulations by making technical corrections to conform to the Veterans' Health Care Eligibility Reform Act of 1996 (Act of 1996). Currently VA regulations read that veterans receive only VA hospital care to treat medical conditions of eligible veterans. We are amending our regulation to clarify that VA provides hospital care and medical services to eligible veterans.

DATES: This final rule is effective November 14, 2014.

FOR FURTHER INFORMATION CONTACT: Kristin J. Cunningham, Director, Business Policy, Chief Business Office, Veterans Health Administration, Department of Veterans Affairs, 810 Vermont Avenue NW., Washington, DC 20420; (202) 461–1599. (This is not a toll-free number.)

SUPPLEMENTARY INFORMATION: The Veterans' Health Care Eligibility Reform Act of 1996 (Act of 1996) significantly changed the provision of care to eligible veterans by establishing an enrollment system of care that gives priority for VA medical care to veterans whose disabilities are connected to military service. Section 101, Public Law 104–262, 103 Stat. 3177. The general enrollment regulations are set forth in 38 CFR 17.36 through 17.38, which are not being amended by this rulemaking. The Act of 1996 clarified that not only does VA provide hospital care, but VA also provides medical services to eligible veterans. Section 1701 of 38 U.S.C. defines the term medical services, which include, among other things, medical examinations, treatment, and rehabilitative services. Since VA has been providing hospital care and medical services to eligible veterans as required by the Act of 1996, VA is updating § 17.47 accordingly. Current § 17.47 refers only to VA's provision of hospital care to eligible veterans when, in fact, VA provides hospital care and medical services to such veterans.

The title of § 17.47 is amended to reflect the scope of the section. The title of the section is changed from ''Considerations applicable in determining eligibility for hospital, nursing home or domiciliary care'' to read ''Considerations applicable in determining eligibility for hospital care, medical services, nursing home care or domiciliary care.''

We are editing § 17.47 to add the term ''medical services'' where appropriate. For example, the first sentence of paragraph (a)(1) reads, ''For applicants discharged or released for disability incurred or aggravated in line of duty and who are not in receipt of compensation for service-connected or service-aggravated disability, the official records of the Armed Forces relative to findings of line of duty for its purposes will be accepted in determining eligibility for hospital care.'' We are amending this sentence by adding ''or medical services'' immediately after ''hospital care''. Because VA does not limit its services to hospital care only, the addition reflects the types of care available to veterans. The other amendments in paragraph (a)(1) and in paragraphs (a)(2), (c), (d)(1), (d)(2), (f), (g)(1) and (g)(2) are made for the same purpose.

For this same reason, we are replacing the term ''admission'' in paragraph (a)(1) with the term ''such care or services''. The term ''admission'' is too narrow, as it applies only to hospital admission and not outpatient medical services. We are also replacing the term ''hospitalization'' in paragraph (a)(1) with ''hospital care or medical services''. We are making similar edits in paragraph (a)(2).

We are making a technical edit to § 17.47(j) by correcting the spelling of ''cytomegalovirus.''

Administrative Procedure Act

The Secretary of Veterans Affairs (Secretary) finds good cause under the provisions of 5 U.S.C. 553(b)(B) to publish this rule without prior opportunity for public comment. This amendment merely revises VA's regulation to comply with a statutory mandate that VA provide hospital care and medical services to eligible veterans. Therefore, a prior opportunity for notice and comment is unnecessary. Additionally, for the reason previously stated, the Secretary finds good cause to dispense with the delayed-effective-date requirement of 5 U.S.C. 553(d).

Effect of Rulemaking

Title 38 of the Code of Federal Regulations, as revised by this final rulemaking, represents VA's implementation of its legal authority on this subject. Other than future amendments to this regulation or governing statutes, no contrary rules or procedures are authorized. All existing or subsequent VA guidance must be read to conform with this rulemaking if possible or, if not possible, such guidance is superseded by this rulemaking.

Paperwork Reduction Act

This final rule contains no provisions constituting a collection of information under the Paperwork Reduction Act of 1995 (44 U.S.C. 3501–3521).

Regulatory Flexibility Act

The Secretary hereby certifies that this final rule will not have a significant economic impact on a substantial number of small entities as they are defined in the Regulatory Flexibility Act (5 U.S.C. 601–612). This final rule will directly affect only individuals and will not directly affect small entities. Therefore, pursuant to 5 U.S.C. 605(b), this rulemaking is exempt from the initial and final regulatory flexibility analysis requirements of 5 U.S.C. 603 and 604.

Executive Orders 12866 and 13563

Executive Orders 12866 and 13563 direct agencies to assess the costs and benefits of available regulatory alternatives and, when regulation is necessary, to select regulatory approaches that maximize net benefits (including potential economic, environmental, public health and safety effects, and other advantages; distributive impacts; and equity). Executive Order 13563 (Improving Regulation and Regulatory Review) emphasizes the importance of quantifying both costs and benefits, reducing costs, harmonizing rules, and promoting flexibility. Executive Order 12866 (Regulatory Planning and Review) defines a ''significant regulatory action,'' requiring review by the Office of Management and Budget (OMB), unless OMB waives such review, as ''any regulatory action that is likely to result in a rule that may: (1) Have an annual effect on the economy of $100 million or more or adversely affect in a material way the economy, a sector of the economy, productivity, competition, jobs, the environment, public health or safety, or State, local, or tribal governments or communities; (2) Create a serious inconsistency or otherwise interfere with an action taken or planned by another agency; (3) Materially alter the budgetary impact of entitlements, grants, user fees, or loan programs or the rights and obligations of recipients thereof; or (4) Raise novel legal or policy issues arising out of legal mandates, the President's priorities, or

the principles set forth in this Executive Order.''

The economic, interagency, budgetary, legal, and policy implications of this regulatory action have been examined, and it has been determined not to be a significant regulatory action under Executive Order 12866. VA's impact analysis can be found as a supporting document at *http://www.regulations.gov,* usually within 48 hours after the rulemaking document is published. Additionally, a copy of the rulemaking and its impact analysis are available on VA's Web site at *http://www1.va.gov/orpm/,* by following the link for VA Regulations Published from FY 2004 through FYTD.

Unfunded Mandates

The Unfunded Mandates Reform Act of 1995 requires, at 2 U.S.C. 1532, that agencies prepare an assessment of anticipated costs and benefits before issuing any rule that may result in the expenditure by State, local, and tribal governments, in the aggregate, or by the private sector, of $100 million or more (adjusted annually for inflation) in any 1 year. This final rule will have no such effect on State, local, and tribal governments, or on the private sector.

Catalog of Federal Domestic Assistance

The Catalog of Federal Domestic Assistance numbers and titles for the programs affected by this final rule are: 64.007, Blind Rehabilitation Centers; 64.008, Veterans Domiciliary Care; 64.009, Veterans Medical Care Benefits; 64.010, Veterans Nursing Home Care; 64.011, Veterans Dental Care; 64.012, Veterans Prescription Service; 64.013, Veterans Prosthetic Appliances; 64.014, Veterans State Domiciliary Care; 64.015, Veterans State Nursing Home Care; 64.018, Sharing Specialized Medical Resources; 64.019, Veterans Rehabilitation Alcohol and Drug Dependence; 64.022, Veterans Home Based Primary Care; and 64.024, VA Homeless Providers Grant and Per Diem Program.

Signing Authority

The Secretary of Veterans Affairs, or designee, approved this document and authorized the undersigned to sign and submit the document to the Office of the Federal Register for publication electronically as an official document of the Department of Veterans Affairs. Jose D. Riojas, Chief of Staff, Department of Veterans Affairs, approved this document on November 6, 2014, for publication.

List of Subjects in 38 CFR Part 17

Administrative practice and procedure, Alcohol abuse; Alcoholism, Claims, Day care, Dental health, Drug abuse, Government contracts, Grant programs—health, Grant programs—veterans, Health care, Health facilities, Health professions, Health records, Homeless, Mental health programs, Nursing homes, Philippines, Veterans.

Dated: November 10, 2014.

Janet Coleman,

Chief, Regulations Development, Tracking, and Control, Office of Regulation Policy & Management, Office of the General Counsel, U.S. Department of Veterans Affairs.

For the reasons set out in the preamble, VA amends 38 CFR part 17 as follows:

PART 17—MEDICAL

■ 1. The authority citation for part 17 continues to read as follows:

Authority: 38 U.S.C. 501, and as noted in specific sections.

§ 17.47 [Amended]

■ 2. Amend § 17.47 by:

■ a. Removing from the section heading ''hospital, nursing home or domiciliary care'' and adding in its place ''hospital care, medical services, nursing home care, or domiciliary care''.

■ b. In paragraph (a)(1) by:

■ i. Removing all references to ''hospital care'' and adding in each place ''hospital care or medical services'';

■ ii. Removing ''admission,'' and adding in its place ''such care or services,''; and

■ iii. Removing ''hospitalization,'' and adding in its place ''hospital care or medical services,''.

■ c. In paragraph (a)(2), by removing ''admission of the applicant for hospital care,'' and adding in its place ''hospital care or medical services,''.

■ d. In paragraph (c), removing all references to ''hospital care'' and adding in each place ''hospital care or medical services''.

■ e. In paragraphs (d)(1) introductory text and (d)(2), removing all references to ''hospital or nursing home care'' and adding in each place ''hospital care, medical services, or nursing home care''.

■ f. In paragraph (f), removing ''hospital, nursing home, or outpatient care under 38 U.S.C. 1710(a)(3) by virtue of the veteran's eligibility for hospital care'' and adding in its place ''hospital care, medical services, nursing home care, or outpatient care under 38 U.S.C. 1710(a)(3) by virtue of the veteran's eligibility for hospital care and medical services ''.

■ g. In the first sentences of paragraphs (g)(1) and (2), adding ''and/or receiving medical services'' immediately following ''hospitalized''.

■ h. In paragraph (j), removing ''cytemegalovirus'' and adding in its place ''cytomegalovirus''.

[FR Doc. 2014–26954 Filed 11–13–14; 8:45 am]

BILLING CODE 8320–01–P

ENVIRONMENTAL PROTECTION AGENCY

40 CFR Part 180

[EPA–HQ–OPP–2013–0729; FRL–9917–15]

Paraquat Dichloride; Pesticide Tolerance

Correction

In rule document 2014–25592 appearing on pages 64317 through 64322 in the issue of Wednesday, October 29, 2014, the table on page 64322 is corrected to read as follows:

§ 180.205 Paraquat; tolerances for residues [Corrected]

(a) * * *

Commodity	Parts per million
* * *	*
Vegetable, tuberous and corm, subgroup 1C	0.50
* * *	*

[FR Doc. C1–2014–25592 Filed 11–13–14; 8:45 am]

BILLING CODE 1505–01–D

DEPARTMENT OF HOMELAND SECURITY

Coast Guard

46 CFR Parts 30, 150, and 153

[Docket No. USCG–2013–0423]

RIN 1625–AB94

2013 Liquid Chemical Categorization Updates

AGENCY: Coast Guard, DHS.

ACTION: Interim rule; delay of effective date.

SUMMARY: The Coast Guard announces an additional two-year delay of the effective date of its 2013 interim rule, which updates and revises tables that list liquid hazardous materials, liquefied gases, and compressed gases that have been approved by the Coast Guard and the International Maritime Organization for maritime transportation in bulk.

These tables also indicate how the pollution potential of each substance has been categorized. The Coast Guard received comments to our 2013 interim rule regarding technical errors in the revised tables and is working to correct those errors. The additional delay will allow the Coast Guard to complete its work to correct technical errors and solicit additional comments in a supplemental notice of proposed rulemaking, prior to finalizing the rule. This rulemaking promotes the Coast Guard's maritime safety and stewardship missions.

DATES: The effective date of the interim final rule published at 78 FR 50147 (Aug. 16, 2013), delayed until January 16, 2014, at 78 FR 56837 (Sept. 16, 2013), and further delayed until January 16, 2015, at 79 FR 2106 (Jan. 13, 2014), is further delayed until January 16, 2017.

FOR FURTHER INFORMATION CONTACT: If you have questions about this rule, email or call Mr. Patrick Keffler, Coast Guard; email: *Patrick.A.Keffler@uscg.mil;* telephone: 202–372–1424. If you have questions about viewing or submitting material to the docket, call Cheryl Collins, Program Manager, Docket Operations, telephone 202–366–9826.

SUPPLEMENTARY INFORMATION: This document is issued under the authority of 5 U.S.C. 552(a).

Dated: November 6, 2014.

J.G. Lantz,

Director of Commercial Regulations and Standards, U.S. Coast Guard.

[FR Doc. 2014–26920 Filed 11–13–14; 8:45 am]

BILLING CODE 9110–04–P

FEDERAL COMMUNICATIONS COMMISSION

47 CFR Part 20

[PS Docket Nos. 11–153; 10–255; FCC 14–118]

Facilitating the Deployment of Text-to-911 and Other Next Generation 911 Application; Framework for Next Generation 911 Deployment

AGENCY: Federal Communications Commission.

ACTION: Final rule; announcement of effective date.

SUMMARY: In this document, the Commission announces that the Office of Management and Budget (OMB) has approved on an emergency basis, for a period of six months, the information collection associated with the Commission's Second Report and Order that adopted rules requiring Commercial Mobile Radio Service (CMRS) providers and other providers of interconnected text messaging applications (collectively, ''covered text providers'') to provide text-to-911 service.

This document is consistent with the Second Report and Order, which stated that the Commission would publish a document in the **Federal Register** announcing the effective date of those rules.

DATES: The amendments to 47 CFR 20.18(n)(10)(i) and (ii), (n)(10)(iii)(C), and (n)(11) published at 79 FR 55367, September 16, 2014, are effective November 14, 2014.

FOR FURTHER INFORMATION CONTACT: Timothy May, Policy and Licensing Division, Public Safety and Homeland Security Bureau, at (202) 418–1463, or email: *timothy.may@fcc.gov.*

SUPPLEMENTARY INFORMATION: This document announces that, on October 27, 2014, OMB approved on an emergency basis, for a period of six months, the information collection requirements relating to the text-to-911 rules contained in the Commission's Second Report and Order, FCC 14–118, published at 79 FR 55367, September 16, 2014. The OMB Control Number is 3060–1204. The Commission publishes this document as an announcement of the effective date of the rules. If you have any comments on the burden estimates listed below, or how the Commission can improve the collections and reduce any burdens caused thereby, please contact Benish Shah, Federal Communications Commission, Room 1–A866, 445 12th Street SW., Washington, DC 20554. Please include the OMB Control Number, 3060–1204, in your correspondence. The Commission will also accept your comments via email at *PRA@fcc.gov.* To request materials in accessible formats for people with disabilities (Braille, large print, electronic files, audio format), send an email to *fcc504@fcc.gov* or call the Consumer and Governmental Affairs Bureau at (202) 418–0530 (voice), (202) 418–0432 (TTY).

Synopsis

As required by the Paperwork Reduction Act of 1995 (44 U.S.C. 3507), the FCC is notifying the public that it received emergency OMB approval on October 27, 2014, for the information collection requirements contained in the modifications to the Commission's rules in 47 CFR part 20.

Under 5 CFR 1320, an agency may not conduct or sponsor a collection of information unless it displays a current, valid OMB Control Number.

No person shall be subject to any penalty for failing to comply with a collection of information subject to the Paperwork Reduction Act that does not display a current, valid OMB Control Number. The OMB Control Number is 3060–1204.

The foregoing notice is required by the Paperwork Reduction Act of 1995, Pub. L. 104–13, October 1, 1995, and 44 U.S.C. 3507.

The total annual reporting burdens and costs for the respondents are as follows:

OMB Control Number: 3060–1204.

OMB Approval Date: October 27, 2014.

OMB Expiration Date: April 30, 2015.

Title: Deployment of Text-to-911.

Form Number: Public Safety Answering (PSAP) Text-to-911 Registration Form (No Form Number Assigned).

Respondents: Businesses or other for-profit; not-for-profit institutions; and state, local or tribal governments.

Number of Respondents and Responses: 3,370 respondents; 58,012 responses.

Estimated Time per Response: 1–8 hours.

Frequency of Response: One-time reporting requirements.

Obligation to Respond: Mandatory. Statutory authority for this information collection is contained in 47 U.S.C. 151, 152, 154(i), 154(j), 154(o), 251(e), 303(b), 303(g), 303(r), 316, and 403.

Total Annual Burden: 76,237 hours.

Total Annual Cost: None.

Nature and Extent of Confidentiality: The Commission will work with respondents to ensure that their concerns regarding the confidentiality of any proprietary or business-sensitive information are resolved in a manner consistent with the Commission's rules.

Privacy Act Impact Assessment: This information collection does not affect individuals or households, and therefore a privacy impact assessment is not required.

Needs and Uses: On August 13, 2014, the Commission released the Order, FCC 14–118, published at 79 FR 55367, September 16, 2014, adopting final rules—containing information collection requirements—to enable the Commission to implement text-to-911 service pursuant to the Second Report and Order, FCC 14–118, released August 13, 2014. The Second Report and Order adopts new rules to commence the implementation of text-to-911 service with an initial deadline of December 31, 2014 for all covered text providers to be capable of supporting text-to-911

service. The Second Report and Order also provides that covered text providers then have a six-month implementation period—they must begin routing all 911 text messages to a Public Safety Answering Point (PSAP) by June 30, 2015 or within six months of a valid PSAP request for text-to-911 service, whichever is later. To implement these requirements, the Commission seeks to collect information primarily for a database in which PSAPs will voluntarily register that they are technically ready to receive text messages to 911. As PSAPs become text-ready, they may either register in the PSAP database (or, if the database is not yet available, submit a notification to PS Docket Nos. 10–255 and 11–153), or provide other written notification reasonably acceptable to a covered text messaging provider. Either measure taken by the PSAP shall constitute sufficient notification pursuant to the adopted rules in the Second Report and Order. PSAPs and covered text providers may mutually agree to an alternative implementation timeframe (other than six months). Covered text providers must notify the FCC of the dates and terms of the alternate timeframe that they have mutually agreed on with PSAPs within 30 days of the parties' agreement.

Additionally, the rules adopted by the Second Report and Order also include other information collections for third party notifications that need to be effective in order to implement text-to-911, including necessary notifications to consumers, covered text providers, and the Commission. These notifications are essential to ensure that all of the affected parties are aware of the limitations, capabilities, and status of text-to-911 services. These information collections will enable the Commission to meet objectives to commence the implementation of text-to-911 service as of December 31, 2014 in furtherance of its core mission to ensure the public's safety.

Federal Communications Commission.

Gloria J. Miles,

Federal Register Liaison.

[FR Doc. 2014–26544 Filed 11–13–14; 8:45 am]

BILLING CODE 6712–01–P

DEPARTMENT OF COMMERCE

National Oceanic and Atmospheric Administration

50 CFR Parts 300 and 660

[Docket No. 141103918–4918–01]

RIN 0648–BE58

International Fisheries; Pacific Tuna Fisheries; 2014 Commercial Fishing for Pacific Bluefin Tuna in the Eastern Pacific Ocean; Commercial Retention Limit

AGENCY: National Marine Fisheries Service (NMFS), National Oceanic and Atmospheric Administration (NOAA), Commerce.

ACTION: Temporary rule for an emergency action.

SUMMARY: NMFS is reopening the U.S. commercial fishery for Pacific bluefin tuna (PBF) in the eastern Pacific Ocean (EPO) until the 500 metric ton (mt) catch limit is reached. If the 500-metric ton limit, which was established under the Tuna Conventions Act (TCA) and regulations implementing Resolution C–13–02 of the Inter-American Tropical Tuna Commission (IATTC) in the EPO, is not met, the fishery will close on December 31, 2014. This reopening of the fishery vacates the closure made by NMFS on September 5, 2014. Following the closure, NMFS received updated information indicating that only 404 mt of the 500 mt catch limit was caught. Thus, the closure was imposed prematurely. This rule also imposes a 1 mt trip limit on retention of PBF in the EPO by commercial vessels as an emergency action under the Magnuson-Stevens Fishery Conservation and Management Act (MSA).

DATES: Effective November 13, 2014, through December 31, 2014.

FOR FURTHER INFORMATION CONTACT: Mark Helvey, NMFS West Coast Region, 562–980–4040, *Mark,Helvey@noaa.gov.*

SUPPLEMENTARY INFORMATION: NMFS takes this action in accordance with the TCA, 16 U.S.C. 951 *et seq.,* and under section 305(c) of the MSA, 16 U.S.C. 1855(c). NMFS published a final rule in the **Federal Register** (79 FR 28448, May 16, 2014) implementing Resolution C–13–02, (''Measures for the Conservation and Management of Bluefin Tuna in the Eastern Pacific Ocean'') adopted by the IATTC at its 85th Meeting in June 2013. Resolution C–13–02 provided for an IATTC-wide (applicable to all members and cooperating non-members of the IATTC fishing in the EPO) commercial catch limit of 5,000 mt and up to 500 mt set aside for IATTC members having a historical catch record of PBF in the EPO. Because the United States has a historical record of PBF catch in the EPO, the U.S. commercial fishing fleet qualifies for the 500 mt catch limit of PBF in the Convention Area for 2014, as explained in the final rule. The final rule further explains that when the IATTC-wide 5,000 mt catch limit is reached, the U.S. commercial fleet may continue to target, retain, transship, or land PBF until the 500 mt limit is reached.

In late August 2014, NMFS received information that the PBF catch by U.S. purse seine vessels was 454 mt. As a result, on September 5, 2014, NMFS closed the fishery, believing that the United States was close to reaching the 500 mt limit (79 FR 53631, September 10, 2014). Following the closure, NMFS received updated landings data indicating that the total U.S. commercial catch in 2014 was 403.5 mt, not 454 mt. Since then, NMFS informed the Pacific Fishery Management Council (Council) of the early closure at their meeting in Spokane, Washington on September 13, 2014, and the Council recommended that NMFS reopen the commercial fishery and establish a 1 mt trip limit until the 500 mt catch limit is reached. NMFS finds the Council's request consistent with several of the MSA national standards for fishery conservation and management within the context of the Council's Fishery Management Plan for U.S. West Coast Fisheries for Highly Migratory Species. While PBF are in an overfished and overfishing condition, the stock is being managed under IATTC Resolution C–13–02 in efforts to curtail catches in the EPO. The Council's recommendation ensures that the remainder of the 500 mt will be available to the U.S. commercial fisheries and harvested in measured increments of 1 mt or smaller, which substantially reduces the risk of exceeding the limit while allowing for resource utilization. Its recommendation adheres to National Standard 1 of the MSA—''conservation and management measures shall prevent overfishing while achieving, on a continuing basis, the optimum yield from each fishery for the United States fishing industry.'' NMFS also recognizes that the number of U.S. vessels able to catch PBF is small because interacting with PBF is not a common event and that their catch can be readily monitored because some vessels capable of efficiently catching PBF in 1 mt increments or less (e.g., drift gillnet) will already have federally trained observers onboard to monitor the catch. In addition, NMFS plans to work with fish buyers and State of

California authorities to monitor PBF landings. The Council's recommendation also supports National Standard 5—''conservation and management measures shall, where practicable, consider efficiency in the utilization of fishery resources; except that no such measure shall have economic allocation as its sole purpose.'' The 1 mt trip limit allows for the final 96 mt of the 500 mt overall limit to be harvested in a calculated and efficient way rather than taking the risk that the 500 mt limit will be exceeded within one or two trips (i.e., by purse seine gear).

The trip limit also comports with MSA National Standard 8—''conservation and management measures shall, consistent with the conservation requirements of this Act (including the prevention of overfishing and rebuilding of overfished stocks), take into account the importance of fishery resources to fishing communities by utilizing economic and social data that meet the requirement of paragraph (2), in order to (a) provide for the sustained participation of such communities, and (b) to the extent practicable, minimize adverse economic impacts on such communities.'' Allowance for the retention of PBF in 1 mt increments can add to U.S. harvesters' portfolios of marketable species and minimizes lost economic opportunity until the 500 mt limit is reached, thereby benefiting West Coast fishing communities.

NMFS recognizes that there are situations where commercial fishermen may inadvertently catch PBF during their fishing operations while targeting other species. The 1 mt trip allowance avoids the requirement to discard PBF catches until the 500 mt catch limit is reached and serves to minimize bycatch. The Council's request comports with National Standard 9—''conservation and management measures shall, to the extent practicable, (a) minimize bycatch and (b) to the extent bycatch cannot be avoided, minimize the mortality of such bycatch.''

Lastly, the 1 mt limit ensures that National Standard 10—''conservation and management measures shall, to the extent practicable, promote the safety of human life at sea''—is met. Correcting the error by reopening this fishery without a trip limit could create a derby-style fishery; that is, a fishery of brief duration during which harvesters race, regardless of weather or ocean conditions, to catch as much as they can before the fishery closes again. Specifically, fishermen able to catch PBF in large quantities might risk the dangers of unsafe sea conditions just to ensure a last catch opportunity.

This emergency trip limit will be effective only through the end of 2014, which is less than the maximum 180 days allowed for emergency rules issued under section 305(c) of the MSA.

NMFS acknowledges the petition received from the Center for Biological Diversity (CBD) requesting NMFS to undertake several actions pertaining to PBF, including prohibiting fishing or, as an alternative, establishing annual catch limits and a permanent minimum size requirement to protect age classes 1 to 2 from fishing mortality. This action to reopen the fishery does not pertain to the petition. Rather, the action corrects an error and sets trip limits under an emergency action to ensure that the 2014 catch limit adopted by the IATTC is not exceeded. The comment period for the petition ended on September 22, 2014. Based on NMFS' current review of those comments, as well as the outcome of the resumed 87th Meeting of the IATTC in late-October, and the Council's scheduled action in November to establish a more restrictive bag limit for the recreational PBF fishery, NMFS will determine the need to proceed with regulations requested by the CBD to prohibit PBF fishing or establish size limits.

NMFS' policy guidelines for the use of emergency rules (62 FR 44421, August 21, 1997) specify the following three criteria that define an emergency situation and justification for final rulemaking: (1) The emergency results from recent, unforeseen events or recently discovered circumstances; (2) the emergency presents serious conservation or management problems in the fishery; and (3) the emergency can be addressed through emergency regulations for which the immediate benefits outweigh the value of advance notice, public comment, and deliberative consideration of the impacts on participants to the same extent as would be expected under the normal rulemaking process. NMFS' policy guidelines further provide that an emergency action is justified for situations, in which it would prevent significant direct economic loss, or to preserve a significant economic opportunity that otherwise might be foregone.

NMFS has determined that setting a 1 mt trip limit on PBF catches meets all three criteria. The temporary rule results from recent, unforeseen events or recently discovered circumstances pertaining to an update on preliminary catch data. The best available information at the time of the closure indicated that the catch limit was less than 50 mt from being reached. The use of purse seine gear is an efficient method for capturing schooling fish and the purse seine vessels that had been harvesting PBF had the capacity to catch more than 50 mt in a single trip. Consequently, NMFS responded by closing the fishery on September 5, 2014, only to later learn that the actual catch was 403.5 mt, not 454 mt. The Council's recommendation for a 1 mt trip limit allows for reopening the fishery while establishing a precautionary management measure designed to prevent exceeding the 500 mt limit. For the reasons explained below in the ''Classification'' section, the benefits of emergency action outweigh the value of the normally applicable notice and comment procedures.

Classification

The Assistant Administrator for Fisheries, NOAA (AA) has determined that this emergency action to promulgate temporary regulations for setting a 1 mt trip limit under the authority of section 305(c) of the MSA is necessary to prevent bycatch, in the form of regulatory discards, of a species in an overfished and overfishing condition. The Council's request to reopen the fishery with a per trip retention limit will provide limited economic opportunities to harvesters and fishing communities, while maintaining catch levels within limits to meet U.S. obligations as a member of the IATTC. This request is consistent with the TCA, MSA, and other applicable laws.

Pursuant to 5 U.S.C. 553(b)(B), the AA finds good cause to waive prior notice and opportunity for advanced public comment. The benefits of implementing this action immediately outweigh the value of advance notice and public comment. Reopening the fishery corrects an error. Failure to correct that error would cause confusion and undermine the purpose of the underlying regulation. Imposition of the 1 mt retention limit is an emergency action and prior notice and opportunity for advanced public comment would be contrary to the public interest. Delaying action intended to allow for the retention of PBF in increments of up to 1 mt would increase the likelihood of waste and economic loss. There is no other action that NMFS can take through the normal rulemaking process that would enable the agency to allow for the commercial retention in fisheries interacting with PBF in time before the end of the year when the availability of the 500 mt catch limit expires. The urgency to issue a final rule that

provides an opportunity for harvesters to retain up to 1 mt in the event they catch PBF reduces the likelihood that the species would be targeted while allowing for economic opportunities to persist.

Correcting the premature closure by reopening the fishery relieves a restriction, and, therefore, is not subject to the 30-day delay in effectiveness under 5 U.S.C. 553(d)(3). For the same reasons provided above, pursuant to 5 U.S.C. 553(d)(3), the AA finds good cause to waive the full 30-day delay in effectiveness for imposition of the 1 mt retention limit. It would be contrary to the public interest if the retention limit does not become effective immediately and concurrently with the reopening of the fishery because an incentive would remain for harvesters to target PBF with gear capable of exceeding the catch limit in one or two trips, thus undermining the purpose of the regulations.

Because notice and opportunity for comment are not required pursuant to 5 U.S.C. 553 or any other law, the analytical requirements of the Regulatory Flexibility Act (5 U.S.C. 601 *et seq.*) are inapplicable. Therefore, a regulatory flexibility analysis is not required and has not been prepared.

This rule has been determined to be not significant for purposes of Executive Order 12866. A Regulatory Impact Review was completed and is available upon request from the NMFS, West Coast Region (see **ADDRESSES**).

Authority: 16 U.S.C. 951 *et seq.* and 16 U.S.C. 1801 *et seq.*

Dated: November 7, 2014.

Samuel D. Rauch III,

Deputy Assistant Administrator for Regulatory Programs, National Marine Fisheries Service.

[FR Doc. 2014–26988 Filed 11–13–14; 8:45 am]

BILLING CODE 3510–22–P

DEPARTMENT OF COMMERCE

National Oceanic and Atmospheric Administration

50 CFR Part 635

[Docket No. 140930815–4916–01]

RIN 0648–BE54

Highly Migratory Species; Technical Amendment to Regulations

AGENCY: National Marine Fisheries Service (NMFS), National Oceanic and Atmospheric Administration (NOAA), Commerce.

ACTION: Final rule; technical amendments.

SUMMARY: NMFS is hereby making technical amendments to our regulations without altering the substance of the regulations. These changes will make our rules more internally consistent and easier to use. As a result of reorganizing 50 CFR part 622 in a previously published final rule (September 19, 2013), two cross-references in 50 CFR part 635 are no longer accurate. This final rule only corrects the outdated cross-references. The rule does not make any substantive change to the regulations governing Atlantic Highly Migratory Species (HMS) or to species managed by NMFS' Southeast Regional Office (SERO).

DATES: This final rule is effective on November 14, 2014.

ADDRESSES: Copies of other documents relevant to this rule are available from the Highly Migratory Species Management Division Web site at *http://www.nmfs.noaa.gov/sfa/hms/* or upon request from the Atlantic HMS Management Division at 1315 East-West Highway, Silver Spring, MD 20910.

FOR FURTHER INFORMATION CONTACT: Rick Pearson at 727–824–5399.

SUPPLEMENTARY INFORMATION: Atlantic HMS are managed under the dual authority of the Magnuson-Stevens Fishery Conservation and Management Act (Magnuson-Stevens Act) and the Atlantic Tunas Convention Act (ATCA). The authority to issue regulations under the Magnuson-Stevens Act and ATCA has been delegated from the Secretary of Commerce to the Assistant Administrator for Fisheries, NOAA (AA). On May 28, 1999, NMFS published in the **Federal Register** (64 FR 29090) regulations implementing the Fishery Management Plan for Atlantic Tunas, Swordfish, and Sharks (1999 FMP). On October 2, 2006, NMFS published in the **Federal Register** (71 FR 58058) regulations implementing the 2006 Consolidated Highly Migratory Species (HMS) FMP, which details the management measures for Atlantic HMS fisheries. The implementing regulations for Atlantic HMS are at 50 CFR part 635.

Background

These technical amendments are issued under 50 CFR part 635, entitled ''Atlantic Highly Migratory Species.'' Currently, the regulations at 50 CFR part 635 contain cross-references to several restricted fishing areas that are described in 50 CFR part 622, entitled ''Fisheries of the Caribbean, Gulf, and South Atlantic.'' The cross-references in 50 CFR part 635 ensure consistency with the regulations at 50 CFR part 622 to protect certain reef species and/or habitat managed by the Caribbean, South Atlantic, and Gulf of Mexico Fishery Management Councils. For example, some areas have been closed to bottom longline gear for reef fish permit holders through the 50 CFR part 622 regulations for the Caribbean, Gulf, and South Atlantic. NMFS through rulemaking enacted complementary regulations to prohibit bottom longline gear in these same areas by HMS permit holders to implement the closures more effectively.

On April 17, 2013, NMFS published an interim final rule (78 FR 22950) to reorganize the regulations implementing fishery management plans developed by the Caribbean, South Atlantic, and Gulf of Mexico Fishery Management Councils. The interim final rule did not create any new obligations, but reorganized the existing regulatory requirements in the Code of Federal Regulations in a more logical format; *i.e.,* by fishery, so that the public could locate regulatory requirements more easily. The final rule was published on September 19, 2013 (78 FR 57534). As a result of reorganizing 50 CFR part 622, two cross-references in 50 CFR part 635 are no longer accurate. With reorganization and changes in references to the 50 CFR part 622 regulations, parallel changes are now needed in the HMS regulations at 50 CFR part 635. This technical amendment would only correct the outdated cross-references. No other changes are being considered or implemented.

Corrections

Currently, the regulations at § 635.21(a)(4)(i) contain a cross-reference to areas designated at § 622.34(d), the Tortugas marine reserves habitat area of particular concern (HAPC). This final rule corrects the cross-reference to indicate the same areas, which are now designated at § 622.74(c), and specifies the name of the areas as the ''Tortugas marine reserves HAPC.''

The regulations at § 635.21(d)(1)(ii) currently contain a cross-reference to areas designated at § 622.33(a)(1) through (3), the Mutton snapper spawning aggregation area, the Red hind spawning aggregation areas, and the Grammanik Bank closed area. This final rule corrects the cross-reference to indicate the same areas, which are now designated at § 622.435(a)(2)(i) through (iii).

Classification

The NMFS Assistant Administrator (AA) has determined that this final rule is necessary for the conservation and management of U.S. Caribbean and Gulf

of Mexico fisheries and that it is consistent with the Magnuson-Stevens Fishery Conservation and Management Act, the 2006 Consolidated Atlantic HMS FMP and its amendments, ATCA, and other applicable law.

Pursuant to 5 U.S.C. 553(b)(B), there is good cause to waive prior notice and an opportunity for public comment on this action, as notice and comment would be unnecessary and contrary to the public interest. This is a non-discretionary, technical amendment that must be implemented to reduce confusion by updating the regulations at 50 CFR part 635 which reference 50 CFR part 622. This final rule implements only corrective, non-substantive changes and will not result in any change in fishing activity. It is solely administrative in nature.

There is good cause under 5 U.S.C. 553(d)(3) to waive the 30-day delay in effective date for this non-substantive rule. The basis for this waiver is the need to implement the action in a timely manner to correct outdated cross-references to other regulations. Any delay in implementation would result in the continuation of incorrect cross-references in the regulations at 50 CFR part 635. This would create confusion, for example, because the current regulation at § 635.21(a)(4)(i) incorrectly prohibits fishing for HMS, or anchoring a vessel, in an area that is closed seasonally to recreational fishing for shallow water grouper, rather than in the area originally identified as the Tortugas marine reserves HAPC, prior to reorganization of the regulations at 50 CFR part 622 in September 2013. Similarly, the current regulation at § 635.21(d)(1)(ii) prohibits HMS-permitted vessels with bottom longline gear on board from deploying any fishing gear year-round in areas incorrectly identified in a paragraph in 50 CFR part 622, which does not describe any areas.

This final rule has been determined to be not significant for purposes of Executive Order 12866.

Because prior notice and opportunity for public comment are not required for this rule by 5 U.S.C. 553, or any other law, the analytical requirements of the Regulatory Flexibility Act, 5 U.S.C. 601 *et seq.,* are inapplicable.

NMFS has determined that fishing activities conducted pursuant to this rule will not affect endangered and/or threatened species or critical habitat under the Endangered Species Act, or marine mammals because the action will not result in any change or increase in fishing activity, and is solely administrative in nature.

List of Subjects in 50 CFR Part 635

Fisheries, Fishing, Fishing vessels.

Dated: November 6, 2014.

Samuel D. Rauch III,

Deputy Assistant Administrator for Regulatory Programs, National Marine Fisheries Service.

For the reasons set out in the preamble, 50 CFR part 635 is amended as follows:

PART 635—ATLANTIC HIGHLY MIGRATORY SPECIES

■ 1. The authority citation for part 635 continues to read as follows:

Authority: 16 U.S.C. 971 *et seq.;* 16 U.S.C. 1801 *et seq.*

■ 2. In § 635.21, revise paragraphs (a)(4)(i) and (d)(1)(ii) to read as follows:

§ 635.21 Gear operation and deployment restrictions.

(a) * * *

(4) * * *

(i) No person may fish for, catch, possess, or retain any Atlantic highly migratory species or anchor a fishing vessel that has been issued a permit or is required to be permitted under this part, in the Tortugas marine reserves HAPC designated at § 622.74(c) of this chapter.

* * * * *

(d) * * *

(1) * * *

(ii) The areas designated at § 622.435(a)(2)(i) through (iii) of this chapter, year-round; and

* * * * *

[FR Doc. 2014–26977 Filed 11–13–14; 8:45 am]

BILLING CODE 3510–22–P

Proposed Rules

Federal Register
Vol. 79, No. 220
Friday, November 14, 2014

This section of the FEDERAL REGISTER contains notices to the public of the proposed issuance of rules and regulations. The purpose of these notices is to give interested persons an opportunity to participate in the rule making prior to the adoption of the final rules.

FEDERAL ELECTION COMMISSION

11 CFR Part 110

[Notice 2014–13]

Rulemaking Petition: Candidate Debates

AGENCY: Federal Election Commission.

ACTION: Rulemaking petition: Notice of availability.

SUMMARY: On September 11, 2014, the Federal Election Commission received a Petition for Rulemaking from Level the Playing Field. The petition asks the Commission to amend its regulation on candidate debates to revise the criteria governing the inclusion of candidates in presidential and vice presidential candidate debates. The Commission seeks comments on this petition.

DATES: Statements in support of or in opposition to the petition must be submitted on or before December 15, 2014.

ADDRESSES: All comments must be in writing. Comments may be submitted electronically via the Commission's Web site at *http://www.fec.gov/fosers.* Commenters are encouraged to submit comments electronically to ensure timely receipt and consideration. Alternatively, comments may be submitted in paper form. Paper comments must be sent to the Federal Election Commission, Attn.: Robert M. Knop, Assistant General Counsel, 999 E Street NW., Washington, DC 20463. Each comment must include the full name and postal service address of the commenter, and of each commenter if filed jointly, or it will not be considered. The Commission will post comments on its Web site at the conclusion of the comment period.

FOR FURTHER INFORMATION CONTACT: Mr. Robert M. Knop, Assistant General Counsel, or Ms. Jessica Selinkoff, Attorney, 999 E Street NW., Washington, DC 20463, (202) 694–1650 or (800) 424–9530.

SUPPLEMENTARY INFORMATION: On September 11, 2014, the Federal Election Commission received a Petition for Rulemaking from Level the Playing Field regarding the Commission's regulation at 11 CFR 110.13(c). That regulation governs the criteria that debate staging organizations (which the petitioner refers to as ''sponsors'') use for inclusion in candidate debates. The regulation requires staging organizations to ''use pre-established objective criteria to determine which candidates may participate in a debate'' and further specifies that, for general election debates, staging organizations ''shall not use nomination by a particular political party as the sole objective criterion to determine whether to include a candidate in a debate.'' 11 CFR 110.13(c). The petition asks the Commission to amend 11 CFR 110.13(c) in two respects: (1) To preclude sponsors of general election presidential and vice presidential debates from requiring that a candidate meet a polling threshold in order to be included in the debate; and (2) to require sponsors of general election presidential and vice presidential debates to have a set of objective, unbiased criteria for debate participation that do not require candidates to satisfy a polling threshold. The Commission seeks comments on the petition.

Copies of the Petition for Rulemaking are available for public inspection on the Commission's Web site at *http://www.fec.gov/fosers/* and in the Commission's Public Records Office, 999 E Street NW., Washington, DC 20463, Monday through Friday between the hours of 9 a.m. and 5 p.m. Interested persons may also obtain a copy of the petition by dialing the Commission's Faxline service at (202) 501–3413 and following its instructions, at any time of the day and week. Request document #275.

Consideration of the merits of the petition will be deferred until the close of the comment period. If the Commission decides that the petition has merit, it may begin a rulemaking proceeding. Any subsequent action taken by the Commission will be announced in the **Federal Register**.

On behalf of the Commission.

Lee E. Goodman,

Chairman, Federal Election Commission.

[FR Doc. 2014–26935 Filed 11–13–14; 8:45 am]

BILLING CODE 6715–01–P

DEPARTMENT OF TRANSPORTATION

Federal Aviation Administration

14 CFR Part 33

[Docket No. FAA–2014–0637; Notice No. 33–14–02–SC]

Special Conditions: CFM International, LEAP–1A and –1C Engine Models; Incorporation of Woven Composite Fan Blades

AGENCY: Federal Aviation Administration (FAA), DOT.

ACTION: Notice of proposed special conditions.

SUMMARY: This action proposes special conditions for the CFM International (CFM), LEAP–1A and –1C engine models. These engines will have a novel or unusual design feature associated with the engine fan blades—new woven composite fan blades. The applicable airworthiness regulations do not contain adequate or appropriate safety standards for this design feature. These proposed special conditions contain the additional safety standards that the Administrator considers necessary to establish a level of safety equivalent to that established by the existing airworthiness standards.

DATES: Send your comments on or before December 29, 2014.

ADDRESSES: Send comments identified by docket number [FAA–2014–0637] using any of the following methods:

- *Federal eRegulations Portal:* Go to *http://www.regulations.gov* and follow the online instructions for sending your comments electronically.
- *Mail:* Send comments to Docket Operations, M–30, U.S. Department of Transportation (DOT), 1200 New Jersey Avenue SE., Room W12–140, West Building Ground Floor, Washington, DC 20590–0001.
- *Hand Delivery or Courier:* Take comments to Docket Operations in Room W12–140 of the West Building Ground Floor at 1200 New Jersey Avenue SE., Washington, DC, between 9 a.m., and 5 p.m., Monday through Friday, except Federal holidays.
- *Fax:* Fax comments to Docket Operations at 202–493–2251.

Privacy: Docket Operations will post all comments it receives, without change, to *http://regulations.gov,* including any personal information the

commenter provides. Using the search function of the docket Web site, anyone can find and read the electronic form of all comments received into any FAA docket, including the name of the individual sending the comment (or signing the comment for an association, business, labor union, etc.). DOT's complete Privacy Act Statement can be found in the **Federal Register** published on April 11, 2000 (65 FR 19477–19478), as well as at *http://DocketsInfo.dot.gov.*

Docket: You may read background documents or comments received at *http://www.regulations.gov* at any time. Follow the online instructions for accessing the docket or go to the Docket Operations in Room W12–140 of the West Building Ground Floor at 1200 New Jersey Avenue SE., Washington, DC, between 9 a.m., and 5 p.m., Monday through Friday, except federal holidays.

FOR FURTHER INFORMATION CONTACT: For technical questions concerning these proposed special conditions, contact Alan Strom, ANE–111, Engine and Propeller Directorate, Aircraft Certification Service, 12 New England Executive Park, Burlington, Massachusetts, 01803–5213; telephone (781) 238–7143; facsimile (781) 238–7199; email *alan.strom@faa.gov.* For legal questions concerning this proposed rule, contact Vincent Bennett, ANE–7, Engine and Propeller Directorate, Aircraft Certification Service, 12 New England Executive Park, Burlington, Massachusetts, 01803–5299; telephone (781) 238–7044; facsimile (781) 238–7055; email *vincent.bennett@faa.gov.*

SUPPLEMENTARY INFORMATION:

Comments Invited

We invite interested people to participate in this rulemaking by submitting written comments, data, or views. The agency also invites comments relating to the economic, environmental, energy, or federalism impacts that might result from adopting the proposals in this document. The most helpful comments reference a specific portion of the proposed special conditions, explain the reason for any recommended change, and include supporting data. To ensure the docket does not contain duplicate comments, commenters should send only one copy of written comments, or if comments are filed electronically, commenters should submit only one time.

We will file in the docket all comments it receives, as well as a report summarizing each substantive public contact with FAA personnel concerning this proposed rulemaking. Before acting on this proposal, we will consider comments filed late if it is possible to do so without incurring expense or delay. We may change these special conditions based on the comments we receive.

Background

On June 27, 2012, the FAA received the type certificate application for CFM's LEAP–1A and –1C turbofan engine models. The LEAP engine models are high-bypass-ratio engines that incorporate a novel and unusual design feature—new woven composite fan blades. The woven composite fan blades will have significant differences in material property characteristics when compared to conventionally designed fan blades using non-composite metallic materials.

Special conditions are required to ensure that the LEAP–1A and –1C woven composite design fan blades account for the differences in material properties and failure modes relative to conventional single-load path metallic blades. In addition, different containment requirements may be applied provided CFM shows that the blade design below the inner annulus flow path line provides multiple load paths and/or crack arresting features that prevent delamination or crack propagation to blade failure during the life of the blade.

These special conditions are necessary because the applicable airworthiness regulations do not contain adequate or appropriate safety standards for the new woven composite design fan blades.

Type Certification Basis

Under the provisions of Title 14, Code of Federal Regulations (14 CFR) 21.17, CFM must show that the LEAP–1A and –1C engine models meet the applicable provisions of the applicable regulations in effect on the date of application, except as detailed in paragraphs 21.101(b) and (c). The FAA has determined the following certification basis for the LEAP–1A and –1C engine models:

1. 14 CFR part 33, ''Airworthiness Standards: Aircraft Engines,'' dated February 1, 1965, with Amendments 33–1 through 33–32, dated September 20, 2012.

If the FAA finds that the regulations in effect on the date of the application for the change do not provide adequate or appropriate safety standards for the LEAP–1A and –1C engine models because of a novel or unusual design feature, special conditions are prescribed under the provisions of § 21.16.

Special conditions are initially applicable to the model for which they are issued. Should the type certificate for that model be amended later to include any other model that incorporates the same or similar novel or unusual design feature, the special conditions would also apply to the other model under § 21.101.

In addition to complying with the applicable product airworthiness regulations and the requirements of these special conditions, the LEAP–1A and –1C engine models must also comply with the fuel venting and exhaust emission requirements of 14 CFR part 34.

The FAA issues special conditions, as defined in 14 CFR 11.19, in accordance with § 11.38, and they become part of the type-certification basis under § 21.17(a)(2).

Novel or Unusual Design Features

The LEAP–1A and –1C engine models will incorporate the following novel or unusual design feature:

The LEAP–1A and –1C engine models will incorporate woven composite fan blades. The woven composite fan blades will have significant differences in material property characteristics when compared to conventionally designed fan blades using non-composite metallic materials. Composite material design provides the capability to incorporate multiple load paths and/or crack arresting features that prevent delamination or crack propagation to blade failure during the life of the blade.

The woven composite fan blades are a novel and unusual design feature that requires additional airworthiness standards for type certification of the LEAP–1A and –1C engine models.

Discussion

The woven composite fan blades are a novel and unusual design feature that requires additional airworthiness standards for type certification of the LEAP–1A and –1C engine models. The current requirements of § 33.94 are based on single-load path metallic fan blade characteristics and service history, and are not appropriate for the unusual design features of the woven composite fan blade found on the CFM LEAP series turbofan engines.

The properties of a composite blade are highly dependent of the composite ply configuration, matrix material, and manufacturing methods. The CFM LEAP engine incorporates 3–D woven resin transfer molding (RTM) technology in the design and manufacture of the blade.

It is expected that CFM will conduct the required material testing per § 33.15

to determine material characteristics that include the effects of defects, manufacturing variations, contamination, environmental effect, and service damage on the material capability and blade life.

Composite material design provides the capability to incorporate multiple load paths and/or crack arresting features that prevent delamination or crack propagation to blade failure during the life of the blade. The probability of failure that an appropriately designed composite fan blade will fail below the inner annulus flow path line may be highly improbable. The airworthiness regulations of 14 CFR part 33 do not contain adequate or appropriate safety standards for an aircraft engine incorporating these novel or unusual design features i.e., woven composite fan blades, including release of the fan blade under § 33.94(a)(1) at the inner annulus flow path line (only the airfoil) instead of the outermost retention feature.

Instead of blade failure at the outermost retention groove currently required by § 33.94(a)(1), the FAA has determined that a more realistic blade-out test can be achieved with a fan blade failure at the inner annulus flow path line i.e., releasing only the airfoil.

Additionally, the FAA considers any change to the design, manufacturing, materials, or service management to the blade below the inner annulus flow path to be a change that could affect the blade integrity. Therefore, the FAA has determined that the blade be marked with a part and serial number, and that additional integrity requirements be applied to the blade below the inner annulus flow path line.

These requirements maintain a level of safety equivalent to the level intended by the applicable airworthiness standards in effect on the date of application.

Applicability

As discussed above, these special conditions are applicable to the LEAP–1A and –1C engine models. Should CFM apply at a later date for a change to the type certificate to include another model incorporating the same novel or unusual design feature, the special conditions would apply to that model as well.

Conclusion

This action affects only the woven composite fan blade feature on the LEAP–1A and –1C engine models. It is not a rule of general applicability and applies only to CFM, who requested FAA approval of this engine feature.

List of Subjects in 14 CFR Part 33

Aircraft, Engines, Aviation Safety, Reporting, and Recordkeeping.

The authority citation for these special conditions is as follows:

Authority: 49 U.S.C. 106(g), 40113, 44701, 44702, 44704.

The Proposed Special Conditions

Accordingly, the FAA proposes the following special conditions as part of the type certification basis for CFM, LEAP–1A and –1C engine models.

1. Part 33, Requirements

In addition to the airworthiness standards in 14 CFR part 33, effective February 1, 1965, with Amendments 33–1 through 33–32 applicable to the CFM, LEAP–1A and –1C engine models:

(a) Conduct an engine fan blade containment test with the fan blade failing at the inner annulus flow path line instead of at the outermost retention groove.

(b) Substantiate by test and analysis, or other methods acceptable to the FAA, that a fan disk and fan blade retention system with minimum material properties can withstand, without failure, a centrifugal load equal to two times the maximum load the retention system could experience within approved engine operating limitations. The fan blade retention system includes the portion of the fan blade from the inner annulus flow path line inward to the blade dovetail, the blade retention components, and the fan disk and fan blade attachment features.

(c) Using a procedure approved by the FAA, establish an operating limitation that specifies the maximum allowable number of start-stop stress cycles for the fan blade retention system. The life evaluation must include the combined effects of high-cycle and low-cycle fatigue. If the operating limitation is less than 100,000 cycles, that limitation must be specified in Chapter 5 of the Engine Manual Airworthiness Limitation Section. The procedure used to establish the maximum allowable number of start-stop stress cycles for the fan blade retention system will incorporate the integrity requirements in paragraphs (c)(1), (2), and (3) of these special conditions for the fan blade retention system.

(1) An engineering plan, which establishes and maintains that the combinations of loads, material properties, environmental influences, and operating conditions, including the effects of parts influencing these parameters, are well known or predictable through validated analysis, test, or service experience.

(2) A manufacturing plan that identifies the specific manufacturing constraints necessary to consistently produce the fan blade retention system with the attributes required by the engineering plan.

(3) A service management plan that defines in-service processes for maintenance and repair of the fan blade retention system, which will maintain attributes consistent with those required by the engineering plan.

(d) Substantiate by test and analysis, or other methods acceptable to the FAA, that the blade design below the inner annulus flow path line provides multiple load paths and/or crack arresting features that prevent delamination or crack propagation to blade failure during the life of the blade.

(e) Substantiate that during the service life of the engine, the total probability of an individual blade retention system failure resulting from all possible causes, as defined in § 33.75, will be extremely improbable with a cumulative calculated probability of failure of less than 10^{-9} per engine flight hour.

(f) Substantiate by test or analysis that not only will the engine continue to meet the requirements of § 33.75 following a lightning strike on the composite fan blade structure, but that the lightning strike will not cause damage to the fan blades that would prevent continued safe operation of the affected engine.

(g) Account for the effects of in-service deterioration, manufacturing variations, minimum material properties, and environmental effects during the tests and analyses required by paragraphs (a), (b), (c), (d), (e), and (f) of these special conditions.

(h) Propose fleet leader monitoring and field sampling programs that will monitor the effects of engine fan blade usage and fan blade retention system integrity.

(i) Mark each fan blade legibly and permanently with a part number and a serial number.

Issued in Burlington, Massachusetts, on November 6, 2014.

Kimberly K. Smith,

Acting Manager, Engine and Propeller Directorate, Aircraft Certification Service.

[FR Doc. 2014–27019 Filed 11–13–14; 8:45 am]

BILLING CODE 4910–13–P

COMMODITY FUTURES TRADING COMMISSION

17 CFR Part 1

RIN 3038–AE23

Records of Commodity Interest and Related Cash or Forward Transactions

AGENCY: Commodity Futures Trading Commission.

ACTION: Notice of proposed rulemaking.

SUMMARY: The Commodity Futures Trading Commission (the ''Commission'' or ''CFTC'') is proposing to amend Commission Rule 1.35(a) (the ''Proposal'') to: provide that all records required to be maintained under this regulation must be searchable; clarify that all records be kept in a form and manner that allows for identification of a particular transaction, except that records of oral and written communications leading to the execution of a transaction in a commodity interest and related cash or forward transactions are not required to be kept in a form and manner that allows for identification of a particular transaction; exclude unregistered members of designated contract markets (''DCMs'') and swap execution facilities (''SEFs'') from the requirements to retain text messages and to maintain records in a particular form and manner; and exclude commodity trading advisors (''CTAs'') from the oral recordkeeping requirement.

DATES: Comments must be received on or before January 13, 2015.

ADDRESSES: You may submit comments, identified by RIN 3038–AE23, by any of the following methods:

- *Agency Web site, via its Comments Online process: http://comments.cftc.gov.* Follow the instructions for submitting comments through the Web site.
- *Mail:* Send to Christopher Kirkpatrick, Secretary of the Commission, Commodity Futures Trading Commission, Three Lafayette Centre, 1155 21st Street NW., Washington, DC 20581.
- *Hand Delivery/Courier:* Same as Mail, above.
- *Federal eRulemaking Portal: http://www.regulations.gov.* Follow the instructions for submitting comments.

Please submit your comments using only one of these methods.

All comments must be submitted in English, or if not, accompanied by an English translation. Comments will be posted as received to *http://www.cftc.gov.* You should submit only information that you wish to make available publicly. If you wish the Commission to consider information that you believe is exempt from disclosure under the Freedom of Information Act, a petition for confidential treatment of the exempt information may be submitted according to the procedures set forth in § 145.9 of the Commission's regulations.[1]

The Commission reserves the right, but shall have no obligation, to review, pre-screen, filter, redact, refuse or remove any or all of your submission from *www.cftc.gov* that it may deem to be inappropriate for publication, such as obscene language. All submissions that have been redacted or removed that contain comments on the merits of the rulemaking will be retained in the public comment file and will be considered as required under the Administrative Procedure Act and other applicable laws, and may be accessible under the Freedom of Information Act.

FOR FURTHER INFORMATION CONTACT: Gary Barnett, Director, (202) 418–6700, *gbarnett@cftc.gov;* Katherine Driscoll, Associate Director, (202) 418–5544, *kdriscoll@cftc.gov;* August A. Imholtz III, Special Counsel, (202) 418–5140, *aimholtz@cftc.gov;* or Lauren Bennett, Attorney-Advisor, (202) 418–5290, *lbennett@cftc.gov,* Division of Swap Dealer and Intermediary Oversight, Commodity Futures Trading Commission, Three Lafayette Centre, 1155 21st Street NW., Washington, DC 20581.

SUPPLEMENTARY INFORMATION:

I. Background

A. Commission Recordkeeping Requirements for Certain Market Participants

On December 21, 2012, the Commission published a final rulemaking, which amended the recordkeeping provisions of Commission Regulation 1.35(a) to integrate the rule more fully with the framework created by the Dodd-Frank Wall Street Reform and Consumer Protection Act for swap dealers and major swap participants (the ''Final Rule'').[2] The Final Rule requires each futures commission merchant (''FCM''), retail foreign exchange dealer (''RFED''), introducing broker (''IB''), and member of a DCM or SEF to keep full, complete, and systematic records of all transactions relating to its business of dealing in commodity interest and related cash or forward transactions.[3] The Commodity Exchange Act (''CEA'') defines ''member'' as an individual, association, partnership, corporation, or trust—(i) owning or holding membership in, or admitted to membership representation on, the registered entity or derivatives transaction execution facility; or (ii) having trading privileges on the registered entity or derivatives transaction execution facility.[4]

The Final Rule includes a requirement to keep records of all oral communications, which applies to each FCM, RFED, large IB (defined as an IB that has generated over $5 million in aggregate gross revenues over the preceding three years from its activities as an IB), and member of a DCM or SEF that is registered or required to register with the Commission as a floor broker (''FB'') (only with regard to acting as an agent for a non-affiliated client) or as a CTA.[5] Unlike the written recordkeeping requirement that applies to transactions in a commodity interest and related cash or forward transactions, the oral recordkeeping requirement is limited to transactions in a commodity interest.[6] The scope of Regulation 1.35(a) under the Final Rule includes communications made via telephone, voicemail, facsimile, instant messaging, chat rooms, electronic mail, mobile device, or other digital or electronic media.[7] These communications include text messages. The Final Rule also mandates that such records be kept in a form and manner identifiable and searchable by transaction.

The Final Rule became effective on February 19, 2013, with a December 21, 2013 compliance date for the oral recordkeeping requirement.[8]

[1] 17 CFR 145.9. The Commission's regulations are found at 17 CFR Ch. I (2013) and can be accessed through the Commission's Web site at *www.cftc.gov.*

[2] *See* Adaptation of Regulations to Incorporate Swaps—Records of Transactions, 77 FR 75523 (Dec. 21, 2012) (''Final Rule Adopting Release'').

[3] 17 CFR 1.35(a)(1).

[4] 7 U.S.C. 1a(34). The CEA can be accessed through the Commission's Web site.

[5] As stated in the Final Rule, the oral recordkeeping requirement in Regulation 1.35(a) does not apply to: (i) Oral communications that lead solely to the execution of a related cash or forward transaction; (ii) oral communications provided or received by a floor broker that do not lead to the purchase or sale for any person other than the floor broker of any commodity for future delivery, security futures product, swap, or commodity option authorized under section 4c of the Commodity Exchange Act; (iii) an introducing broker that has generated over the preceding three years $5 million or less in aggregate gross revenues from its activities as an introducing broker; (iv) a floor trader; (v) a commodity pool operator; (vi) a swap dealer; (vii) a major swap participant; or (viii) a member of a DCM or SEF that is not registered or required to be registered with the Commission in any capacity. 17 CFR 1.35(a)(1).

[6] 17 CFR 1.35(a)(1).

[7] *Id.*

[8] Final Rule Adopting Release at 75524.

B. Comments Received on the 2011 Proposed Amendments to Regulation 1.35(a)

Prior to promulgating the Final Rule, on June 7, 2011, the Commission published proposed changes to Regulation 1.35(a) and sought public comment on those proposed changes (the ''2011 Proposed Rule'').[9] In response, the Commission received 35 comment letters from a variety of institutions.[10] Many commenters opposed the Proposed Rule's written and oral recordkeeping requirements for members of a DCM or SEF that are commercial end-users and non-intermediaries.[11] The commenters on the 2011 Proposed Rule generally argued that entities that do not trade for customers pose minimal risk to the market, and should therefore not be subject to what they believed to be the costly recordkeeping burdens outlined in the proposed changes to Regulation 1.35(a).[12] Some commenters also suggested that the proposed recordkeeping provisions could potentially deter some end-users from hedging commercial risk on a DCM or SEF, thereby ''defeating the Dodd-Frank Act's transparency objectives.'' [13]

After carefully considering the comments to the 2011 Proposed Rule, the Commission excluded commercial end-users and non-intermediaries from the oral recordkeeping provisions.[14] The Commission did not exclude those same market participants from the written recordkeeping requirements of Regulation 1.35(a), concluding that the Final Rule would ''significantly advance the Commission's efforts to detect and deter abusive, disruptive, fraudulent and manipulative acts and practices that seriously harm market integrity and customers.'' [15]

Since the Final Rule was promulgated on December 21, 2012, the Commission has received additional comments from a wide range of commercial end-users and CTAs that are members of a DCM or SEF that the Final Rule, and in some instances Regulation 1.35(a) as it existed before the Commission promulgated the Final Rule, is overly burdensome and inappropriate in its application to end-users and to CTAs. Subsequently, on April 3, 2014, the Commission staff held a Public Roundtable to Discuss Dodd-Frank End-User Issues [16] (the ''End-User Roundtable''). In addition, Commission staff has provided certain market participants with relief from particular aspects of the Final Rule.[17] Both the End-User Roundtable and staff relief are described below.

C. End-User Roundtable

On April 3, 2014, Commission staff hosted the End-User Roundtable to discuss, among other things, the impact of the amendments to Regulation 1.35(a) on various market participants. One of the primary issues discussed at the roundtable was the fact that many market end-users are subject to Regulation 1.35(a) simply by virtue of having trading privileges on a DCM or SEF.[18] One roundtable participant noted that many end-users that have trading privileges rely on text messages to communicate to market intermediaries their interest to engage in commodity interests and related cash and forward transactions.[19] Some roundtable participants stated it is prohibitively expensive to retain text messages.[20]

Many roundtable commenters also noted that, given the nature of their business, it is very difficult to maintain required written records in a manner identifiable and searchable by transaction.[21] As explained by one end-user participant, because they do not manage their positions on a transaction-by-transaction basis, but on a portfolio basis, they are not able to identify the extent to which certain records must be kept for certain transactions.[22]

The End-User Roundtable also addressed the oral recordkeeping requirement for members of a DCM or SEF that are CTAs. One CTA participant stated that as a fiduciary that manages assets on a discretionary basis, a CTA's investment decisions are made independently by the CTA based on a client's investment guidelines, rather than ongoing communications with the client.[23] The CTA participant therefore observed that the oral recordkeeping provision of Regulation 1.35(a) would not further the interest of customer protection with respect to CTAs.[24]

D. CFTC Letter No. 13–77

On December 10, 2013, the Asset Management Group of the Securities Industry and Financial Markets Association (''SIFMA AMG'') and the Managed Funds Association (''MFA'') submitted a letter to the CFTC Division of Swap Dealer and Intermediary Oversight (''DSIO'') seeking interpretive guidance and relief that would confirm their view that those asset managers, including CTAs, that participate on a SEF would not be members of a SEF for purposes of the Final Rule, or for guidance or relief that would otherwise exempt asset managers from the Final Rule.[25] In the alternative, SIFMA AMG and MFA sought additional time to allow asset managers that are members of SEFs to come into compliance with the Final Rule. In response, DSIO and the Division of Market Oversight (together, the ''Divisions'') issued a no-action letter on December 20, 2013 granting relief to CTAs that are members of SEFs from the requirement under the Final Rule to record oral

[9] Adoption of Regulations to Incorporate Swaps, 76 FR 33066 (July 7, 2011).

[10] *See* Final Rule Adopting Release at 75524. These comments can be found on the Commission's Web site at *http://comments.cftc.gov/PublicComments/CommentList.aspx?id=1037*.

[11] Final Rule Adopting Release at 75527.

[12] *Id.*

[13] *Id.*

[14] Under the Final Rule, members of a DCM or SEF that are not registered or required to register with the Commission in any capacity are not required to record and keep oral communications. Because floor traders and commodity pool operators do not face customers, the Commission chose to exempt them as well from the oral recordkeeping requirement. 17 CFR 1.35(a)(1).

[15] Final Rule Adopting Release at 75528.

[16] Public Roundtable to Discuss Dodd-Frank End-User Issues, Commodity Futures Trading Commission (Apr. 3, 2014), available at: *http://www.cftc.gov/ucm/groups/public/@newsroom/documents/file/transcript040314.pdf* (''End-User Roundtable Transcript'').

[17] *See* CFTC Staff Letter No. 13–77, Time-Limited No-Action Relief for Certain Members of Swap Execution Facilities from the Requirement to Record Oral Communications Pursuant to Commission Regulation 1.35(a) (Dec. 20, 2013), available at: *http://www.cftc.gov/ucm/groups/public/@lrlettergeneral/documents/letter/13-77.pdf* (''CFTC Staff Letter No. 13–77''); CFTC Staff Letter No. 14–33, Time-Limited No-Action Relief for Certain Members of a Designated Contract Market from the Requirement to Record Oral Communications, Pursuant to Commission Regulation 1.35(a), in Connection with the Execution of Swap Transactions (Mar. 21, 2014), available at: *http://www.cftc.gov/ucm/groups/public/@lrlettergeneral/documents/letter/14-33.pdf* (''CFTC Staff Letter No. 14–33''); CFTC Staff Letter No. 14–60, Time-Limited No-Action Relief for Certain Members of Swap Execution Facilities and Designated Contract Markets from the Requirement to Record Oral Communications, Pursuant to Commission Regulation 1.35(a), in Connection with the Execution of Swap Transactions (Apr. 25, 2014), available at: *http://www.cftc.gov/ucm/groups/public/@lrlettergeneral/documents/letter/14-60.pdf* (''CFTC Staff Letter No. 14–60''); CFTC Staff Letter No. 14–72, Time-Limited No-Action Relief for Members of Designated Contract Markets and Swap Execution Facilities that Are Not Registered with the Commission from the Requirement to Record Written Communications, Pursuant to Commission Regulation 1.35(a), in Connection with the Execution of a Transaction in a Commodity Interest and Related Cash or Forward Transactions (May 22, 2014), available at: *http://www.cftc.gov/ucm/groups/public/@lrlettergeneral/documents/letter/14-72.pdf* (''CFTC Staff Letter No. 14-72'').

[18] *See* End-User Roundtable Transcript.

[19] *Id.* at 55.

[20] *See id.*

[21] *See id.*

[22] *See id.* at 14–16.

[23] *Id.* at 64–65.

[24] *Id.*

[25] *See* SIFMA AMG and MFA Letter, Request for Interpretive Guidance on Application of Rule 1.35(a) to Asset Managers (Dec. 10, 2013), available at *http://www.sifma.org/issues/item.aspx?id=8589946605* and CFTC Staff Letter No. 13–77.

communications.[26] That relief was set to expire on May 1, 2014. The Divisions believed that additional time for these asset managers was warranted given that SEFs had only recently begun publishing their rulebooks, and the requestors' representations that asset managers needed more time to adjust their recordkeeping processes in order to comply with the Final Rule.

E. CFTC Letter No. 14–33

On March 21, 2014, trueEX, a registered DCM and provisionally registered SEF, submitted a letter to the Divisions requesting relief on behalf of CTAs that are members of trueEX from the requirement under the Final Rule to record oral communications that lead to the execution of swap transactions on trueEX DCM.[27] In response to the trueEX request, and citing to the relief in CFTC Letter No. 13–77 granted to CTAs that are members of SEFs, the Divisions issued no-action relief to CTAs that are members of trueEX DCM from the requirement to record oral communications that lead to the execution of swap transactions on trueEX DCM.[28] That relief was set to expire on May 1, 2014.

F. CFTC Letter No. 14–60

On April 17, 2014, SIFMA AMG submitted another letter to the Divisions requesting exemptive relief from the recordkeeping requirements of Regulation 1.35(a) for asset managers that are members of SEFs or DCMs in connection with the execution of swaps.[29] SIFMA AMG contended that the costs of compliance associated with the rule's oral and written recordkeeping requirements for asset managers significantly outweighed the benefits.[30]

The Divisions considered SIFMA AMG's concerns in relation to the prior no-action relief granted to asset managers and comments from the recent end-user roundtable discussion, and issued a no-action letter on April 25, 2014 which provides no-action relief to CTAs that are members of SEFs or DCMs from the requirement to record oral communications in connection with the execution of swaps. This relief will expire on December 31, 2014.[31]

G. CTFC Letter No. 14–72

On December 12, 2013, the Commodity Markets Council (''CMC'') submitted a request (''CMC Request'') for interpretive guidance to the Divisions regarding the electronic recordkeeping requirements of Regulation 1.35(a) on behalf of members of DCMs and SEFs that are not registered or required to register with the Commission in any capacity (''Unregistered Members'').[32] CMC stated that although text messaging and other electronic communications had become the primary mode of communication for Unregistered Members, these firms had encountered difficulties in securing a technology solution for storing and searching those records.[33]

The Divisions considered this concern in conjunction with similar comments raised at the End-User Roundtable discussion regarding the ''searchability'' requirement, and granted limited no-action relief to Unregistered Members from the requirements under Regulation 1.35(a) to: (i) Retain text messages, and (ii) store required records in a form and manner identifiable and searchable by transaction.[34] Under the no-action letter, the relief for Unregistered Members will remain effective until any final Commission action with respect to the CMC Request, including a rulemaking, order, or a determination not to take action.

II. The Proposal

The Commission carefully considered all of the comments submitted prior to the adoption of the Final Rule. In drafting the Final Rule, the Commission aimed to address its goals of promoting market integrity and customer protection with the consequential burdens imposed on market participants. In light of the concerns raised at the End-User Roundtable and letters to the Commission from the public requesting guidance and exemptive relief, the Commission is considering further amendments to Regulation 1.35(a). In response to several requests from market participants for guidance on how to comply with the requirement under Regulation 1.35(a) that records be ''identifiable and searchable by transaction,'' the Commission is proposing to amend the language of Regulation 1.35(a) to: (i) provide that all records that are required to be maintained under this regulation must be searchable; and (ii) clarify that all such records must be kept in a form and manner that allows for identification of a particular transaction, except that records of oral and written communications provided or received concerning quotes, solicitations, bids, offers, instructions, trading, and prices that lead to the execution of a transaction in a commodity interest and related cash or forward transactions are required to be searchable, but need not be kept in a form and manner that allows for identification of a particular transaction.[35]

The Commission also understands that compliance with some aspects of the rule imposes burdens on certain Unregistered Members and CTAs. The Commission also has a particular interest in protecting customers who engage with intermediaries to access the commodities markets. Thus, the Commission is proposing to exclude Unregistered Members from the requirement to retain text messages, and from the requirement to maintain records in a particular form and manner. The Commission also recognizes that many CTAs who are members of DCMs or SEFs and have discretionary trading authority do not have routine discussions with end-clients regarding transactions in commodity interests, and is therefore proposing to further balance CTAs' recordkeeping burden by excluding them from the oral recordkeeping requirement of Regulation 1.35(a).

A. Proposing To Amend Regulation 1.35(a) To Clarify the ''Identifiable'' and ''Searchable'' Requirements of the Rule Generally

Regulation 1.35(a) mandates that required records be maintained in a form and manner ''identifiable and searchable by transaction.'' [36] The Commission has received several

[26] *Id.*

[27] *See* CFTC Staff Letter No. 14–33.

[28] *Id.*

[29] *See* SIFMA AMG Letter, CFTC Staff Public Roundtable to Discuss Dodd-Frank End-User Issues and Request for Interpretative Guidance and Relief on Application of Rule 1.35(a) to Asset Managers (Apr. 17, 2014), available at: *http://www.sifma.org/issues/item.aspx?id=8589948677,* and CFTC Staff Letter No. 14–60.

[30] *Id.*

[31] *See* CFTC Staff Letter No. 14–60. SIFMA's letter requested relief from the oral and written recordkeeping requirements of the regulation, but the Divisions addressed the request for relief solely with respect to oral communications.

[32] *See* CMC Letter, Request for Interpretive Guidance—Rule 1.35 Contained Within the Final Rules on Adaptation of Regulations to Incorporate Swaps—Records of Transactions (Dec. 12, 2013), available at: *http://www.commoditymkts.org/wp-content/uploads/2014/05/CMC-Rule-1.35-Interpretive-Guidance-Request-Letter-12.12.2013a.pdf*, and CFTC Staff Letter No. 14–72.

[33] *Id.*

[34] *Id.*

[35] The proposed amendment to Regulation 1.35(a) does not modify, limit, restrict or reduce the obligations that exist under Regulation 1.31 to produce required records in native file format, and to produce those records in such a manner as to preserve the full functionality that may be available in native file format.

[36] 17 CFR 1.35(a)(1).

requests from market participants for guidance on how to comply with this requirement. The Commission is now proposing that all required records must be searchable, but not ''searchable by transaction.'' The current rule also states that all required records be ''identifiable by transaction.'' The Commission is clarifying that this means records must be kept in a form and manner that allows for identification of a particular transaction, with certain exception, as described below.

B. Proposing That Records of Oral and Written Communications That Lead to the Execution of a Transaction Be Searchable, But Not Kept in a Form and Manner That Allows for Identification of a Particular Transaction

As it does for all records, Regulation 1.35(a) states that records of all oral and written communications provided or received concerning quotes, solicitations, bids, offers, instructions, trading, and prices that lead to the execution of a transaction in a commodity interest and related cash or forward transactions, whether communicated by telephone, voicemail, facsimile, instant messaging, chat rooms, electronic mail, mobile device, or other digital or electronic media, be kept in a form and manner identifiable and searchable by transaction. The Commission has received several requests from market participants for guidance on how to comply with this requirement. The Commission believes that access to these oral and written communications is necessary for the Commission to oversee and monitor the derivatives market and to enforce Commission rules and regulations. The Commission therefore is not altering the existing requirements that covered entities maintain these records in a searchable format. The Commission therefore is proposing to amend Regulation 1.35(a) to clarify that records of oral and written communications provided or received concerning quotes, solicitations, bids, offers, instructions, trading, and prices that lead to the execution of a transaction in a commodity interest and related cash or forward transactions are required to be searchable, but are not required to be kept in a form and manner that allows for identification of a particular transaction. This means that there would be no requirement for a market participant to link or otherwise identify a record of a communication that leads to the execution of a transaction with a particular transaction.

C. Proposing To Exclude Unregistered Members of Designated Contract Markets or Swap Execution Facilities From the Requirements To Retain Text Messages and To Maintain Required Records in a Particular Form and Manner

Pursuant to the Final Rule, FCMs, RFEDs, IBs, and all members of DCMs or SEFs must retain written records of commodity interests and related cash or forward transactions.[37] The CEA defines ''member'' as an individual, association, partnership, corporation, or trust (i) owning or holding membership in, or admitted to membership representation on, the registered entity or derivatives transaction execution facility; or (ii) having trading privileges on the registered entity or derivatives transaction execution facility.[38]

For various reasons relating to the nature of their market activity, many end-user market participants that meet this definition of member are not registered or required to register with the Commission. Many of these end-users have noted that text messaging is their primary method of communication regarding commodity interest transactions and related cash or forward transactions.[39] These end-users have further stated that it is prohibitively expensive for them, in light of their business, to retain text messages.[40] Accordingly, the Proposal would exclude Unregistered Members from the requirement under Regulation 1.35(a) to retain text messages. Although text messages are a primary means of communication for a significant number of Unregistered Members, certain other Unregistered Members (e.g., commodity trading firms) do not rely on text messages to the same extent to transact in commodity interests and related cash and forward transactions. Because all Unregistered Members must retain all other required written records and electronic communications, the Commission believes that its ability to properly oversee and monitor the derivatives market is not unduly affected. In addition, the Commission notes that the Proposal does not change the written recordkeeping requirement for all registered members, including with respect to text messages.

Some end-users subject to the Final Rule also have stated that maintaining the required written records in a manner that is identifiable and searchable by transaction is difficult given the nature of the relationship between their cash or forward transactions and their trading and hedging practices in the derivatives markets. The Commission notes that the ''searchable'' and ''identifiable'' requirements do not require covered entities to link all of their transactions in commodity interests to related cash or forward transactions (e.g., their hedges with related hedged positions) by a specific identifier. Nonetheless, the Commission recognizes that the proposed requirement that covered entities keep records in a searchable format and in a form and manner that allows for identification of a particular transaction may pose additional burdens on those Unregistered Members who manage their positions on an aggregate basis. Therefore, the Proposal also would exclude Unregistered Members from these requirements. The Commission understands that these exclusions may result in an incremental burden on the Commission, if it is required to search through these records. The Commission believes, however, that as long as Unregistered Members maintain their records, this Proposal would not unduly compromise the Commission's ability to oversee and monitor the derivatives market and to enforce Commission rules and regulations.

D. Proposing To Exclude Commodity Trading Advisors From the Requirement To Record and Maintain Oral Communications

The Final Rule requires, among other things, that all CTAs that are members of a DCM or SEF record all oral communications that lead to the execution of a transaction in a commodity interest.[41] The Proposal would exclude members of a DCM or SEF that are CTAs from this oral recordkeeping obligation. Removing CTAs from the requirement to record and keep oral communications, as with removing unregistered members of a DCM or SEF from certain aspects of the written recordkeeping requirements, is consistent with the Commission's goals of balancing its interest in protecting customers and ensuring market integrity, with the burdens of affected market participants. The Commission understands that many CTAs who are members of a DCM or SEF have discretionary trading authority over their customers' accounts and, therefore, those CTAs would not be having routine telephone conversations with customers that lead to the execution of an order on a DCM or SEF. Nevertheless, the Commission is not proposing to remove

[37] 17 CFR 1.35(a)(1).

[38] 7 U.S.C. 1a(34).

[39] *See* CFTC Letter 14–72 and End-User Roundtable Transcript at 55.

[40] *See* End-User Roundtable Transcript.

[41] 17 CFR 1.35(a)(1).

members of a DCM or SEF that are CTAs from the written recordkeeping requirements of 1.35(a) because certain CTAs may receive orders from customers that the CTAs then execute on behalf of the customer on a non-discretionary basis, or may receive instructions changing or limiting their discretionary authority. Although the Commission believes it is consistent with the regulatory goals of Rule 1.35(a) to ensure that customer communications regarding orders be captured, the cost of recording and keeping oral communications weighs against the benefits of achieving these goals. The same cannot be said for the costs of recording and maintaining written records, which costs the Commission understands to be significantly less than the same costs regarding oral communications.

III. Request for Comments

The Commission seeks comment on all aspects of this Proposal. In particular, the Commission seeks comment on the following questions:

1. What are the potential effects of removing the requirement that records of oral and written communications provided or received concerning quotes, solicitations, bids, offers, instructions, trading, and prices that lead to the execution of a transaction in a commodity interest and related cash or forward transactions are not required to be kept in a form and manner that allows for identification of a particular transaction?

2. What are the potential effects of excluding Unregistered Members from the requirement to retain text messages?

3. Is existing technology for storing text messages cost prohibitive for Unregistered Members to use? Are there other impediments to using this technology?

4. What are the potential effects of excluding Unregistered Members from the requirements to store required records in a form and manner that is searchable and in a form and manner that allows for identification of a particular transaction?

5. Rather than excluding all Unregistered Members from these aspects of the written recordkeeping obligations of the rule, would the interests of promoting customer protection and minimizing recordkeeping burdens be better balanced by excluding only small Unregistered Members from these requirements? If so, how would ''small'' Unregistered Members be defined?

6. Would the exclusion of text messages from the written records requirement for all Unregistered Members incentivize Unregistered Members, especially commodity trading firms, to switch their method of communication? If so, should the Commission use a certain threshold in setting this exclusion, ensuring that the Commission can continue to properly oversee and monitor the derivatives market and enforce Commission rules and regulations?

7. What is the potential effect on the market of excluding members of DCMs or SEFs that are CTAs from the oral recordkeeping requirement of the Final Rule?

8. Is there a significant difference in the administrative burden of the oral recordkeeping requirement of Regulation 1.35(a) for large and small CTAs that would warrant exclusion of small CTAs, but not large CTAs?

9. If so, how would ''large'' CTAs be defined?

10. Would the Proposal impact the Commission's ability to carry out its market oversight responsibilities with regard to the overall derivatives market? If so, how?

11. Does the Proposal serve the public interest? In what ways?

IV. Related Matters

A. Regulatory Flexibility Act

The Regulatory Flexibility Act [42] requires that Federal agencies consider whether the rules they propose will have a significant economic impact on a substantial number of small entities and, if so, they must provide a regulatory flexibility analysis reflecting the impact. Whenever an agency publishes a general notice of proposed rulemaking for any rule, pursuant to the notice-and-comment provisions of the Administrative Procedure Act [43] a regulatory flexibility analysis or certification typically is required.[44] The Proposal, if adopted, will not have a significant economic impact on affected persons because the Proposal will relieve them from certain regulatory obligations that would otherwise apply to them. Specifically, the (proposed) amendment to 1.35(a) would provide relief from certain elements of the existing recordkeeping requirements of that section, and the Proposal would not impose any new regulatory obligations on the affected persons. Thus, the Proposal would not have any appreciable economic impact on affected entities.

Accordingly, the Chairman, on behalf of the Commission, hereby certifies pursuant to 5 U.S.C. 605(b) that the Proposal will not have a significant economic impact on a substantial number of small entities.

B. Paperwork Reduction Act

The Proposal will not impose any new recordkeeping or information collection requirements, or other collections of information that require approval of the Office of Management and Budget under the Paperwork Reduction Act (''PRA'').[45] All recordkeeping or information collection requirements relevant to the subject of this proposed rulemaking, or discussed herein, already exist under current law. The title for this collection of information is ''Adaptation of Regulations to Incorporate Swaps—Records of Transactions,'' OMB control number 3038–0090. This collection of information is not expected to be impacted by the rule amendment proposed herein, as the calculations which are already reflected in the burden estimate are not expected to appreciably change because of the relief provided in the Proposal. The PRA burden hours associated with this collection of information are therefore not expected to be increased or reduced as a result of the amendment proposed. Accordingly, the PRA does not apply. The Commission invites public comment on the accuracy of its estimate that no additional recordkeeping or information collection requirements or changes to existing collection requirements would result from the amendments proposed herein.

C. Cost-Benefit Considerations

Section 15(a) of the CEA requires the Commission to consider the costs and benefits of its actions before promulgating a regulation under the CEA or issuing certain orders. Section 15(a) further specifies that the costs and benefits shall be evaluated in light of five broad areas of market and public concern: (1) Protection of market participants and the public; (2) efficiency, competitiveness, and financial integrity of futures markets; (3) price discovery; (4) sound risk management practices; and (5) other public interest considerations. The Commission considers the costs and benefits resulting from its discretionary determinations with respect to the section 15(a) factors.

1. Background

The Commission is proposing an amendment to Regulation 1.35(a) which would: (i) Provide that all records that

[42] 5 U.S.C. 601 *et seq.*

[43] 5 U.S.C. 553. The Administrative Procedure Act is found at 5 U.S.C. 500 *et seq.*

[44] *See* 5 U.S.C. 601(2), 603–05.

[45] 44 U.S.C. 3501 *et seq.*

are required to be maintained under this regulation must be searchable; (ii) clarify that all records be kept in a form and manner that allows for identification of a particular transaction, except that records of oral and written communications leading to the execution of a transaction in a commodity interest and related cash or forward transactions are not required to be kept in a form and manner that allows for identification of a particular transaction; (iii) exclude unregistered members of DCMs and SEFs from the requirements to retain text messages and to maintain records in a particular form and manner; and (iv) exclude CTAs from the oral recordkeeping requirement.

The Commission believes that the baseline for this cost and benefit consideration is the existing rule 1.35(a). While CFTC Staff Letters 14–60 and 14–72, as discussed above, currently provide no-action relief that is substantially similar to the relief the proposed amendments provide to certain market participants and end users, the Commission preliminarily believes that CFTC Staff Letters 14–60 and 14–72 should not set or affect the baseline from which the Commission considered the costs and benefits of the Proposal. This is because, as they indicate, CFTC Staff Letters 14–60 and 14–72 do not necessarily represent the position or view of the Commission or any other office or division of the Commission.

2. Costs

The Commission believes that the Proposal will not impose any additional costs upon those affected market participants and end users, but instead will reduce some of the regulatory burdens and associated costs that Regulation 1.35(a) imposes upon them. The Commission preliminarily believes that it may be difficult to quantify what costs the Proposal imposes upon other market participants, the markets themselves, or the general public. The Commission preliminarily believes that one of the costs associated with the Proposal will be that certain market participants and end-users will no longer be required to create and maintain certain types of records that are useful for the Commission in exercising its oversight of the markets, including for market surveillance, enforcement, and ensuring market integrity. Comments are invited regarding the extent of all of these costs, and any other costs that would result from adoption of the Proposal, including estimates of monetary or other measurements thereof.

3. Benefits

The Commission believes that the Proposal will have a tangible benefit for those market participants and end-users that are excluded from some of the regulatory burdens and associated costs of Regulation 1.35(a) under the Proposal. The Commission preliminarily believes that it may be difficult to quantify what other benefits the Proposal may have for other market participants, the markets themselves, or the general public. Comments are sought regarding these benefits and any other benefits resulting from adoption of the Proposal, and to the extent they can be quantified, estimates of the monetary or other value thereof.

4. Section 15(a)

Section 15(a) of the CEA requires the Commission to consider the effects of its actions in light of the following five factors:

a. Protection of Market Participants and the Public

The proposed amendments to Rule 1.35(a) are intended, in part, to reduce some of the regulatory burdens on certain market participants and end-users. The Commission recognizes that there may be a trade-off between reducing regulatory burdens while at the same time ensuring that the recordkeeping obligations Rule 1.35(a) imposes upon market participants and end users are sufficient to support the effort by the Commission to fulfill its regulatory mission. Are the scope and reach of the proposed amendments appropriate to achieve these goals?

Under the proposed amendments to Rule 1.35(a) certain market participants and end-users will no longer be required to create and maintain certain types of records that would be useful for the Commission in exercising its oversight of the markets, including for market surveillance, enforcement, and ensuring market integrity. What effect, if any, will the proposed amendments have on the ability of the Commission to obtain information necessary to effectively oversee the markets and investigate and prosecute misconduct?

b. Efficiency, Competitiveness, and Integrity of Markets

The proposed amendments to Rule 1.35(a) are intended, in part, to reduce some of the regulatory burdens on certain market participants and end-users. Will the proposed amendments actually decrease the regulatory burdens on certain market participants and end-users? If so, will this result in increased efficiency and competition among end-users, without compromising market integrity?

What effect, if any, will the proposed amendments to Rule 1.35(a) have on the ability of customers to trade in efficient, competitive, and liquid markets?

Will the proposed amendments to Rule 1.35(a) reduce the regulatory burdens for unregistered end-users that are DCM or SEF members? If so, will reducing this regulatory burden increase or decrease the efficiency, competitiveness and integrity of the markets?

c. Price Discovery

The Commission preliminarily believes that the proposed amendments will not have any effect on price discovery. The Commission recognizes that, under the Proposal, certain market participants and end-users will no longer be required to create and maintain certain types of records that may be useful for the Commission in exercising its oversight of the markets, including for market surveillance, enforcement, and ensuring market integrity. Might this be perceived as a reduction in Commission surveillance or enforcement capability that potentially could result in increased market misconduct that ultimately affects price discovery?

d. Sound Risk Management

The proposed amendments to Rule 1.35(a) are intended, in part, to reduce some of the regulatory burdens on certain market participants and end-users. Will the proposed amendments actually decrease the regulatory burdens on certain market participants and end-users? If so, what effect, if any, will this have on the risk management practices of market participants and end-users?

e. Other Public Interest Considerations

The Commission has not identified any other public purpose considerations for this rulemaking.

5. Request for Comment

The Commission invites comments from the public on all aspects of its preliminary consideration of costs and benefits associated with the Proposal. The Commission also invites comments from the public on all aspects of its preliminary consideration of the five factors that the Commission is required to consider under Section 15(a) of the CEA. The questions below relate to areas that the Commission preliminarily believes may be relevant. In addressing these or any other aspect of the Commission's preliminary assessment, commenters are encouraged to submit any data or other information that they

may have quantifying or qualifying the costs and benefits of the Proposal.

a. What are the costs and benefits to market participants, if any, associated with the Proposal? Please explain and, to the extent possible, quantify these costs.

b. What are the costs and benefits to the public, if any, associated with the Proposal? Please explain and, to the extent possible, quantify these costs.

c. To what extent does the Proposal protect market participants and the public? How, if at all, could the Proposal be altered to better protect market participants and the public?

d. How, if at all, does the Proposal affect the efficiency, competitiveness, and financial integrity of markets?

e. How, if at all, does the Proposal affect price discovery?

f. How, if at all, does the Proposal affect sound risk management for market participants and end-users?

g. How, if at all, does the Proposal affect the public interest?

h. What are the costs and benefits to market participants and the public, if any, associated with the application of this rule for activities outside of the United States? Please explain, and to the extent possible, quantify these costs.[46]

List of Subjects in 17 CFR Part 1

Agricultural commodity, Agriculture, Brokers, Committees, Commodity futures, Conflicts of interest, Consumer protection, Definitions, Designated contract markets, Directors, Major swap participants, Minimum financial requirements for intermediaries, Reporting and recordkeeping requirements, Swap dealers, Swaps.

For the reasons stated in the preamble, the Commodity Futures Trading Commission proposes to amend 17 CFR chapter I as set forth below:

PART 1—GENERAL REGULATIONS UNDER THE COMMODITY EXCHANGE ACT

■ 1. The authority citation for part 1 continues to read as follows:

Authority: 7 U.S.C. 1a, 2, 5, 6, 6a, 6b, 6c, 6d, 6e, 6f, 6g, 6h, 6i, 6k, 6l, 6m, 6n, 6o, 6p, 6r, 6s, 7, 7a–1, 7a–2, 7b, 7b–3, 8, 9, 10a, 12, 12a, 12c, 13a, 13a–1, 16, 16a, 19, 21, 23, and 24 (2012).

■ 2. In § 1.35, revise paragraph (a) to read as follows:

§ 1.35 Records of commodity interest and related cash or forward transactions.

(a) *Futures commission merchants, retail foreign exchange dealers, introducing brokers, and members of designated contract markets or swap execution facilities.* (1) Each futures commission merchant, retail foreign exchange dealer, introducing broker, and member of a designated contract market or swap execution facility shall keep full, complete, and systematic records, which include all pertinent data and memoranda, of all transactions relating to its business of dealing in commodity interests and related cash or forward transactions. Included among such records shall be all orders (filled, unfilled, or canceled), trading cards, signature cards, street books, journals, ledgers, canceled checks, copies of confirmations, copies of statements of purchase and sale, and all other records, which have been prepared in the course of its business of dealing in commodity interests and related cash or forward transactions. Among such records each member of a designated contract market or swap execution facility must retain and produce for inspection are all documents on which trade information is originally recorded, whether or not such documents must be prepared pursuant to the rules or regulations of either the Commission, the designated contract market or the swap execution facility. For purposes of this section, such documents are referred to as ''original source documents.'' Also included among the records required to be kept by this paragraph are all oral and written communications provided or received concerning quotes, solicitations, bids, offers, instructions, trading, and prices that lead to the execution of a transaction in a commodity interest and related cash or forward transactions, whether communicated by telephone, voicemail, facsimile, instant messaging, chat rooms, electronic mail, mobile device, or other digital or electronic media.

(2) *Form and manner.* (i) All records required to be kept pursuant to paragraph (a)(1) of this section shall be searchable; and

(ii) All records required to be kept pursuant to paragraph (a)(1) of this section shall be kept in a form and manner that allows for identification of a particular transaction, except for records of all oral and written communications provided or received concerning quotes, solicitations, bids, offers, instructions, trading, and prices that lead to the execution of a transaction in a commodity interest and related cash or forward transactions, whether communicated by telephone, voicemail, facsimile, instant messaging, chat rooms, electronic mail, mobile device, or other digital or electronic media.

(3) *Provided, however,* for a member of a designated contract market or swap execution facility that is not registered or required to register with the Commission in any capacity, records required to be kept pursuant to paragraph (a)(1) of this section:

(i) Are not required to be kept pursuant to paragraph (a)(2) of this section; and

(ii) Do not include text messages sent or received by such member.

(4) *Provided, however,* the requirement in paragraph (a)(1) of this section to record oral communications shall not apply to:

(i) Oral communications that lead solely to the execution of a related cash or forward transaction;

(ii) Oral communications provided or received by a floor broker that do not lead to the purchase or sale for any person other than the floor broker of any commodity for future delivery, security futures product, swap, or commodity option authorized under section 4c of the Commodity Exchange Act;

(iii) An introducing broker that has generated over the preceding three years $5 million or less in aggregate gross revenues from its activities as an introducing broker;

(iv) A floor trader;

(v) A commodity pool operator;

(vi) A commodity trading advisor;

(vii) A swap dealer;

(viii) A major swap participant; or

(ix) A member of a designated contract market or swap execution facility that is not registered or required to be registered with the Commission in any capacity.

(5) For purposes of paragraph (a)(1) of this section, ''related cash or forward transaction'' means a purchase or sale for immediate or deferred physical shipment or delivery of an asset related to a commodity interest transaction where the commodity interest transaction and the related cash or forward transaction are used to hedge, mitigate the risk of, or offset one another.

(6) Each futures commission merchant, retail foreign exchange dealer, introducing broker, and member of a designated contract market or swap execution facility shall retain the records required to be kept by this section in accordance with the requirements of § 1.31, and produce them for inspection and furnish true and correct information and reports as to the contents or the meaning thereof, when and as requested by an authorized

[46] Pursuant to CEA section 2(i) this rule will apply to swaps activities outside the United States to the extent they meet the requirements of that section. *See* 7 U.S.C. 2(i).

representative of the Commission or the United States Department of Justice.

(7) (i) The Commission may in its discretion establish an alternative compliance schedule for the requirement to record oral communications under paragraph (a)(1) of this section that is found to be technologically or economically impracticable for an affected entity that seeks, in good faith, to comply with the requirement to record oral communications under paragraph (a)(1) of this section within a reasonable time period beyond the date on which compliance by such affected entity is otherwise required.

(ii) A request for an alternative compliance schedule under paragraph (a)(7)(i) of this section shall be acted upon within 30 days from the time such a request is received, or it shall be deemed approved.

(iii) The Commission hereby delegates to the Director of the Division of Swap Dealer and Intermediary Oversight or such other employee or employees as the Director may designate from time to time, the authority to exercise the discretion. Notwithstanding such delegation, in any case in which a Commission employee delegated authority under this paragraph believes it appropriate, he or she may submit to the Commission for its consideration the question of whether an alternative compliance schedule should be established. The delegation of authority in this paragraph shall not prohibit the Commission, at its election, from exercising the authority set forth in paragraph (a)(7)(i) of this section.

(iv) Relief granted under paragraph (a)(7)(i) of this section shall not cause an affected entity to be out of compliance or deemed in violation of any recordkeeping requirements.

* * * * *

Issued in Washington, DC, on November 4, 2014, by the Commission.

Christopher J. Kirkpatrick,

Secretary of the Commission.

Note: The following appendices will not appear in the Code of Federal Regulations.

Appendices to Records of Commodity Interest and Related Cash or Forward Transactions—Commission Voting Summary, Chairman's Statement, and Commissioner's Statement

Appendix 1—Commission Voting Summary

On this matter, Chairman Massad and Commissioners Wetjen and Bowen voted in the affirmative. Commissioner Giancarlo voted in the negative.

Appendix 2—Statement of Chairman Timothy G. Massad

I support the Staff's recommendation to amend CFTC Regulation 1.35. One of my priorities has been to fine-tune our rules to make sure they work as intended and do not impose undue burdens or unintended consequences, particularly for the nonfinancial commercial businesses that use these markets to hedge commercial risks. Consistent with that goal, the proposed amendment is designed to make sure that the farmers, ranchers, manufacturers, and other commercial companies who depend on the derivatives markets can continue to use them efficiently and effectively.

Regulation 1.35 requires various types of market participants to keep written and oral records of transactions. This record keeping is very important to our efforts to police the markets and insure integrity and transparency.

Regulation 1.35 has been on the books since 1948, and we have updated it from time to time in light of changes in marketplace practices as well as the scope of our jurisdiction. After the Commission amended this rule in December 2012 and the Staff observed implementation of these changes, the Staff determined that the costs of complying with certain aspects of the rule for some market participants might exceed the potential benefits, and the Staff granted no action relief. Specifically, the Staff said that regarding written records, members of DCMs and SEFs that are not registered with the Commission do not have to keep text messages or store their other records in a manner that is identifiable and searchable by transaction. Regarding oral communications, Staff said that commodity trading advisors do not have to record oral communications regarding their swap transactions.

The costs of maintaining the records that our rules require market participants to keep will ultimately be reflected in the transaction costs incurred by all customers, and so we must always keep the costs in balance with the benefit to market oversight. Today, we are simply proposing to revise the rule so that it reads consistent with that staff no action relief and to provide a slight expansion of some of that relief so that CTAs do not have to record any oral communications. We are also proposing to clarify one aspect of the rule that has generated confusion. This pertains to the requirement that records must be identifiable and searchable by transaction and what ''identifiable and searchable'' means.

Appendix 3—Dissenting Statement of Commissioner J. Christopher Giancarlo

I respectfully dissent from the Commodity Futures Trading Commission's (CFTC or Commission) approval of the proposed rule on Records of Commodity Interest and Related Cash or Forward Transactions, commonly known as Rule 1.35.

In 2012, the CFTC revised Rule 1.35. The rule currently requires the keeping of all oral and written records that lead to the execution of a transaction in a commodity interest and related cash or forward transaction, in a form and manner ''identifiable and searchable by transaction.'' This recordkeeping must be done (with certain carve outs) by futures commission merchants (FCMs), retail foreign exchange dealers (RFEDs), introducing brokers (IBs), and members of designated contract markets (DCMs) and swap execution facilities (SEFs).

The revised rule proved to be unworkable. Its publication was followed by requests for no-action relief and a public roundtable at which entities covered by the rule voiced their inability to tie all communications leading to the execution of a transaction to a particular transaction or transactions. End-user exchange members pointed out that business that was once conducted by telephone had moved to text messaging, so the carve out in the rule for oral communications had little utility. They pointed out that it was simply not feasible technologically to keep pre-trade text messages in a form and manner ''identifiable and searchable by transaction.''

The proposed revisions to Rule 1.35 go a long way towards addressing the difficulties presented by the current rule. Unfortunately, they do not go far enough. The proposed rule text raises unanswered questions. It continues to contain provisions that may be difficult to comply with or overly burdensome in practice for certain covered entities. In my opinion, many of the problems that remain stem from imprecise legal drafting and undefined terms.

Section (a)(1) of the proposed rule identifies the records that must be kept by a covered entity, which include ''all pertinent data and memoranda, of all transactions relating to its business of dealing in commodity interests and related cash or forward transactions. Included among such records shall be all orders (filled, unfilled, or canceled), trading cards, signature cards, street books, journals, ledgers, canceled checks, copies of confirmations, copies of statements of purchase and sale, and all other records, which have been prepared in the course of its business of dealing in commodity interests and related cash or forward transactions.'' Also included among the records required to be kept by Section (a)(1) are ''all oral and written communications provided or received concerning quotes, solicitations, bids, offers instructions, trading, and prices that lead to the execution of a transaction in a commodity interest and related cash or forward transactions, whether communicated by telephone, voicemail, facsimile, instant messaging, chat rooms, electronic mail, mobile device, or other digital or electronic media.''

Section (a)(2)(i) of the proposed rule requires that all of the above records be ''searchable.'' Section (a)(2)(ii) requires that they be ''kept in a form and manner that allows for identification of a particular transaction, except for records of all oral and written communications provided or received concerning quotes, solicitations, bids, offers, instructions, trading, and prices that lead to the execution of a transaction in a commodity interest and related cash or forward transactions.''

Members of DCMs and SEFs that are not registered or required to register with the Commission are carved out from the

requirements that records be searchable and kept in a form and manner that allows for identification of a particular transaction, thus those requirements apply to FCMs, RFEDs, IBs, and members of DCMs and SEFs that are required to register with the Commission, such as commodity trading advisors (CTAs).

Section (a)(6) of the proposal requires covered entities to retain Rule 1.35 records in accordance with Rule 1.31. Rule 1.31 (which applies to all books and records required to be kept by the Commodity Exchange Act and Commission regulations) contains detailed requirements regarding the form and manner in which records must be maintained and produced. It states, among other things, that paper records shall be kept in their original form, and that electronic records shall be kept in their native file format. *See* Rule 1.31(a)(1). It also requires that records be produced ''in a form specified by any representative of the Commission.'' *Id.* Thus, Rule 1.35, on the one hand, identifies the particular records that must be kept, while Rule 1.31, on the other hand, sets the form and manner in which such records must be maintained and produced. But the proposal mixes things up by adding to Rule 1.35 (where they do not belong) new requirements for most covered entities regarding form and manner—that the records allow for identification of a particular transaction and be ''searchable,'' a term that is not defined.

While it is likely that electronic records kept in their native file format are searchable, it is not clear what ''searchable'' means when it comes to paper records such as canceled checks, signed account agreements, and paper orders. Does the proposal require that a record of a wire transfer received by an FCM to cover margin for multiple positions be kept in a form and manner that allows for identification of each potential transaction? Will a small FCM embedded in a grain elevator have to keep copies of checks received from farmers in some sort of searchable format tied to specific transactions? What if the farmer's check mistakenly references the wrong transactions and the FCM doesn't catch it? Is the FCM now in breach of our rules? Will FCMs and IBs need to hire a paper records ''searchability'' staff just to tie records to individual transactions in the event, but not the certainty, that someday the CFTC will want those records? At what cost to them and to American markets and end-users?

I am also concerned that although the proposal provides relief to asset managers, such as CTAs, from the oral record keeping requirements, its adoption would continue to burden them with unnecessary costs and potentially discourage them from becoming members of SEFs. A comment letter filed by SIFMA's Asset Management Group after the public roundtable stated, for example, that a requirement similar to Rule 1.31's requirement that any digital storage medium or system must ''preserve the records exclusively in a non-rewritable, non-erasable format,'' *see* Rule 1.31(b)(1)(ii)(A), also known as ''WORM,'' was rejected by the Securities and Exchange Commission when considering amending its own recordkeeping requirements for registered investment advisers and registered investment companies because the costs associated with preserving records in that manner outweighed the benefits. SIFMA AMG Letter (Apr. 17, 2014), available at: *http://www.sifma.org/issues/item.aspx?id=8589948677.*

I encourage all affected parties to give us detailed comments on the proposal, with emphasis on the intersection between Rule 1.35 and Rule 1.31, and how the proposed searchability and identification by transaction requirements will work in practice. I encourage the public to make us listen once again to their concerns about the costs and benefits of this particular rule set.

I am also interested in answers to the following questions:

1. The proposal excludes unregistered exchange members from the requirement to retain text messages. Is the scope of this exclusion appropriate? Do the impediments for storing text messages in a searchable format extend to persons beyond unregistered members?

2. While unregistered members would not be required under the proposal to keep records in a searchable format, or in a form and manner that allows for identification of a particular transaction, they still would be required to keep all Rule 1.35 records, including all written communications (except text messages) provided or received concerning quotes, solicitations, bids, offers, instructions, trading, and prices *that lead to* the execution of a transaction in a commodity interest and related cash or forward transactions. FCMs, IBs, RFEDs and registered exchange members must keep such records (including text messages) in a searchable format. What are the costs associated with keeping such records in accordance with Rule 1.31? Is *leading to the execution of a transaction* the appropriate scope of this particular recordkeeping requirement? Should the scope be narrowed or broadened? If so, why?

3. Are there any technological impediments to the oral recordkeeping requirements of Rule 1.35(a)?

4. Is there a need to revise Rule 1.31 given advancements in technology and current business practices?

Although I do not support today's proposal, I am hopeful that after thoughtful consideration of the comments, the Commission will promulgate a final rule that is precise in its meaning and terms and that appropriately balances compliance costs with the need to effectively regulate the markets we oversee.

[FR Doc. 2014–26983 Filed 11–13–14; 8:45 am]

BILLING CODE 6351–01–P

COMMODITY FUTURES TRADING COMMISSION

17 CFR Part 1

RIN 3038–AE22

Residual Interest Deadline for Futures Commission Merchants

AGENCY: Commodity Futures Trading Commission.

ACTION: Notice of proposed rulemaking.

SUMMARY: The Commodity Futures Trading Commission (''Commission'' or ''CFTC'') is proposing to revise the Residual Interest Deadline in Commission Rule 1.22. The amendment would remove the December 31, 2018 termination date for the phased-in compliance schedule for futures commission merchants (''FCMs'') and provide assurance that the Residual Interest Deadline would only be revised through a separate Commission rulemaking.

DATES: Comments must be received on or before January 13, 2015.

ADDRESSES: You may submit comments, identified by RIN 3038–AE22, by any of the following methods:

- Agency Web site, via its Comments Online process: *http://comments.cftc.gov.* Follow the instructions for submitting comments through the Web site.
- Mail: Send to Christopher Kirkpatrick, Secretary of the Commission, Commodity Futures Trading Commission, Three Lafayette Centre, 1155 21st Street NW., Washington, DC 20581.
- Hand Delivery/Courier: Same as Mail, above.
- Federal eRulemaking Portal: *http://www.regulations.gov.* Follow the instructions for submitting comments.

Please submit your comments using only one of these methods.

All comments must be submitted in English, or if not, accompanied by an English translation. Comments will be posted as received to *http://www.cftc.gov.* You should submit only information that you wish to make available publicly. If you wish the Commission to consider information that may be exempt from disclosure under the Freedom of Information Act, a petition for confidential treatment of the exempt information may be submitted according to the procedures set forth in § 145.9 of the Commission's regulations.[1]

The Commission reserves the right, but shall have no obligation, to review, pre-screen, filter, redact, refuse or remove any or all of your submission from *www.cftc.gov* that it may deem to be inappropriate for publication, such as obscene language. All submissions that have been redacted or removed that contain comments on the merits of the rulemaking will be retained in the public comment file and will be considered as required under the Administrative Procedure Act and other

[1] Commission regulations referred to herein are found at 17 CFR Ch. 1 (2012). Commission regulations are accessible on the Commission's Web site, *www.cftc.gov.*

applicable laws, and may be accessible under the Freedom of Information Act.

FOR FURTHER INFORMATION CONTACT:

Division of Swap Dealer and Intermediary Oversight: Thomas Smith, Deputy Director, 202–418–5495, *tsmith@cftc.gov;* Jennifer Bauer, Special Counsel, 202–418–5472, *jbauer@cftc.gov;* Joshua Beale, Attorney-Advisor, 202–418–5446, *jbeale@cftc.gov,* Three Lafayette Centre, 1155 21st Street NW., Washington, DC 20581.

Division of Clearing and Risk: M. Laura Astrada, Associate Chief Counsel, 202–418–7622, *lastrada@cftc.gov,* or Kirsten V. K. Robbins, Special Counsel, 202–418–5313, *krobbins@cftc.gov,* Three Lafayette Centre, 1155 21st Street NW., Washington, DC 20581.

Office of the Chief Economist: Stephen Kane, Research Economist, *skane@cftc.gov,* 202–418–5911, Three Lafayette Centre, 1155 21st Street NW., Washington, DC 20581.

SUPPLEMENTARY INFORMATION:

I. Background

On October 30, 2013, the Commission amended Regulation 1.22 to enhance the safety of funds deposited by customers with FCMs as margin for futures transactions.[2] The amendments require an FCM to maintain its own capital (hereinafter referred to as the FCM's ''Residual Interest'') in customer segregated accounts in an amount equal to or greater than its customers' aggregate undermargined amounts.[3]

If an FCM is required to increase its Residual Interest as a result of customer undermargined accounts, the FCM must deposit additional funds into the customer segregated accounts by the specified Residual Interest Deadline.[4] The Commission established a phased-in compliance schedule for Regulation 1.22 with an initial Residual Interest Deadline of 6:00 p.m. Eastern Time on the date of the settlement referenced in Regulation 1.22(c)(2)(i) (the ''Settlement Date''), beginning November 14, 2014.[5]

In addition, the Commission directed staff to publish for public comment a report (the ''Report'') addressing, to the extent information is practically available, the practicability (for both FCMs and customers) of moving the Residual Interest Deadline from 6:00 p.m. Eastern Time on the Settlement Date, to the time of settlement or to some other time of day.[6] The Report is also to address whether and on what schedule it would be feasible to move the Residual Interest Deadline, and the costs and benefits of such potential requirements.[7] The Commission further directed staff to solicit public comment and conduct a public roundtable regarding specific issues to be covered by the Report.[8] The Report is to be completed by May 16, 2016.[9]

Within nine months after the publication of the Report, the Commission may, by Order, terminate the phase-in period, or determine that it is necessary or appropriate in the public interest to propose through a separate rulemaking a different Residual Interest Deadline.[10] Finally, absent Commission action, the phased-in compliance period for the Residual Interest Deadline will terminate on December 31, 2018, and the Residual Interest Deadline will change to the time of settlement on the Settlement Date.[11]

II. Discussion

As noted above, absent Commission action, the phase-in of the compliance period for the Residual Interest Deadline will automatically terminate on December 31, 2018, and change to the time of settlement on the Settlement Date. The Commission is proposing to revise Regulation 1.22 to remove the December 31, 2018 automatic termination of the phase-in compliance period. The proposal would instead provide that the Residual Interest Deadline would remain at 6:00 p.m. Eastern Time, unless the Commission takes further action via publication of a new rule.

The Commission is proposing to amend Regulation 1.22 in order to provide the Commission with a greater degree of flexibility to assess the issues and all relevant data associated with revising the Residual Interest Deadline. In this regard, the proposal would afford the Commission the opportunity to fully and carefully consider the views expressed during the public roundtable, the views and issues raised during the solicitation of public comments, and the results of the staff's Report, regarding the practicability and costs and benefits of revising the Residual Interest Deadline without the constraints of an established regulatory deadline for Commission action. The Commission is also proposing to revise Regulation 1.22 to make clear that any subsequent revision to the Residual Interest Deadline may only be effected through a separate rulemaking.

The Commission notes that this proposal does not alter the requirement in Regulation 1.22(c)(3)(i) that, commencing November 14, 2014, all FCMs maintain the requisite Residual Interest in customer accounts by no later than 6:00 p.m. Eastern Time on the Settlement Date.

The Commission invites comments on all aspects of the proposed amendments to the phase-in compliance period, including the costs and benefits of this proposed change. For example, does the automatic termination of the phase-in compliance period serve any useful purposes, such as focusing attention on the Report, that the Commission should consider? At this time, are there indications that issues regarding the practicability and costs and benefits of revising the Residual Interest Deadline will require significant time to consider, such that the automatic termination of the phase-in compliance period would hamper consideration of those issues? What are the particular concerns, if any, suggesting that the automatic termination of the phase-in compliance period is inappropriate in the specific context of Regulation 1.22?

III. Cost-Benefit Considerations

Section 15(a) of the Commodity Exchange Act (''CEA'') requires the Commission to consider the costs and benefits of its actions before promulgating a regulation under the CEA or issuing certain orders.[12] Section 15(a) further specifies that the costs and benefits shall be evaluated in light of five broad areas of market and public concern: (1) Protection of market participants and the public; (2) efficiency, competitiveness, and financial integrity of futures markets; (3) price discovery; (4) sound risk management practices; and (5) other public interest considerations. The Commission considers the costs and benefits resulting from its discretionary determinations with respect to the section 15(a) factors.

The proposed rule and the status quo baseline with which the costs and benefits are compared are similar. The baseline for this costs and benefits consideration is the status quo, in which

[2] Enhancing Protections Afforded Customers and Customer Funds Held by Futures Commission Merchants and Derivatives Clearing Organizations, Final Rule, 78 FR 68506 (Nov. 14, 2013) (amending 17 CFR Parts 1, 3, 22, 30 and 140).

[3] *See* 17 CFR 1.22(c)(3)(i). As defined in Regulation 1.22(c)(1), a customer's account is ''undermargined,'' when the value of the customer funds for a customer's account is less than the total amount of collateral required by derivatives clearing organizations for that account's contracts. *See* 78 FR 68513, n.30.

[4] *See* 17 CFR 1.22(c)(3)(i). The term ''Residual Interest Deadline'' is defined in Regulation 1.22(c)(5).

[5] *See* 17 CFR 1.22(c)(5)(ii)(A); *see* 78 FR 68578.

[6] *See* 17 CFR 1.22(c)(5)(iii)(A).

[7] *Id.*

[8] *Id.*

[9] *Id.*

[10] *See* 17 CFR 1.22(c)(5)(iii)(B).

[11] *See* 17 CFR 1.22(c)(5)(iii)(C).

[12] 7 U.S.C. 19(a).

the 6:00 p.m. Eastern Time on the Settlement Date would apply until the Commission takes further action or, in the absence of further action, December 31, 2018. Inasmuch as the proposed rule would not change the settlement date, but would eliminate the December 31, 2018 deadline requiring FCMs to maintain sufficient Residual Interest in its customer accounts by the time of settlement on the Settlement Date, the Commission believes that there is not likely to be any material difference between this proposed rulemaking and the status quo baseline in terms of the first four section 15(a) factors.

With respect to the fifth section 15(a) factor, ''other public interest considerations,'' the Commission has considered that the presence of an automatic termination of the phase-in compliance period in the regulation may have beneficial effects. For example, the automatic termination of the phase-in compliance period may focus attention on the results of the Report and provide a timeline for the Commission's consideration of issues about the Residual Interest requirement. On the other hand, the Commission has considered that time will be required to consider the Report and related roundtable and public comments, prior to any change in the Residual Interest Deadline. As it does not have relevant data to quantify a monetary value of the public interest considerations likely to be implicated by the proposed elimination of the December 31, 2018 deadline, the Commission has considered them qualitatively in reaching its preliminary decision to propose the elimination of the regulatory deadline. The Commission invites comment on the cost and benefit implications of all of the public interest considerations that are relevant to its proposal, as well as on the other section 15(a) factors.

IV. Related Matters

A. Regulatory Flexibility Act

The Regulatory Flexibility Act (''RFA'') [13] requires Federal agencies, in promulgating regulations, to consider the impact of those regulations on small entities. The Commission has previously established certain definitions of ''small entities'' to be used by the Commission in evaluating the impact of its rules on small entities in accordance with the RFA.[14] The proposed regulations would affect FCMs. The Commission previously has determined that FCMs are not small entities for purposes of the RFA, and, thus, the requirements of the RFA do not apply to FCMs.[15] The Commission's determination was based, in part, upon the obligation of FCMs to meet the minimum financial requirements established by the Commission to enhance the protection of customers' segregated funds and protect the financial condition of FCMs generally.[16] Accordingly, the Chairman, on behalf of the Commission, hereby certifies pursuant to 5 U.S.C. 605(b) that the proposed regulations will not have a significant economic impact on a substantial number of small entities.

The Commission invites comments on the impact of this proposed regulation on small entities.

B. Paperwork Reduction Act

The Paperwork Reduction Act (''PRA'') provides that a Federal agency may not conduct or sponsor, and a person is not required to respond to, a collection of information unless it displays a currently valid control number issued by the Office of Management and Budget (''OMB''). This proposed rulemaking amends requirements that contain a collection of information for which the Commission has previously received a control number from OMB. The title for this collection of information is ''Regulations and Forms Pertaining to Financial Integrity of the MarketPlace, OMB control number 3038–0024''. This collection of information is not expected to be impacted by the rule amendment proposed herein, as the calculations which are already reflected in the burden estimate are not expected to change, but the phase-in period for assessing compliance relative to such calculations is solely proposed to be altered. The PRA burden hours associated with this collection of information are therefore not expected to be increased or reduced as a result of the amendment proposed.

Accordingly, for purposes of the PRA, these proposed rule amendments, if promulgated in final form, would not impose any new reporting or recordkeeping requirements. The Commission invites public comment on the accuracy of its estimate that no additional information collection requirements or changes to existing collection requirements would result from the rules proposed herein.

[13] 5 U.S.C. 601 *et seq.*

[14] 47 FR 18618 (Apr. 30, 1982).

[15] *Id.* at 18619.

[16] *Id.*

List of Subjects in 17 CFR Part 1

Brokers, Commodity futures, Consumer protection, Reporting and recordkeeping requirements.

For the reasons discussed in the preamble, the Commodity Futures Trading Commission proposes to amend 17 CFR chapter I as set forth below:

PART 1—GENERAL REGULATIONS UNDER THE COMMODITY EXCHANGE ACT

■ 1. The authority citation for part 1 continues to read as follows:

Authority: 7 U.S.C. 1a, 2, 5, 6, 6a, 6b, 6c, 6d, 6e, 6f, 6g, 6h, 6i, 6k, 6l, 6m, 6n, 6o, 6p, 6r, 6s, 7, 7a–1, 7a–2, 7b, 7b–3, 8, 9, 10a, 12, 12a, 12c, 13a, 13a–1, 16, 16a, 19, 21, 23, and 24 (2012).

■ 2. In § 1.22, revise paragraphs (c)(5)(iii)(B) and (C) to read as follows:

§ 1.22 Use of futures customer funds restricted.

* * * * *

(c) * * *

(5) * * *

(iii) * * *

(B) Nine months after publication of the report required by paragraph (c)(5)(iii)(A) of this section, the Commission may (but shall not be required to) do either of the following:

(*1*) Terminate the phase-in period through rulemaking, in which case the phase-in period shall end as of a date established by a final rule published in the **Federal Register**, which date shall be no less than one year after the date such rule is published; or

(*2*) Determine that it is necessary or appropriate in the public interest to propose through rulemaking a different Residual Interest Deadline. In that event, the Commission shall establish, if necessary, a phase-in schedule in the final rule published in the **Federal Register**.

(C) If the phase-in schedule has not been terminated or revised pursuant to paragraph (c)(5)(iii)(B) of this section, then the Residual Interest Deadline shall remain 6:00 p.m. Eastern Time on the date of the settlement referenced in paragraph (c)(2)(i) or, as appropriate, (c)(4) of this section until such time that the Commission takes further action through rulemaking.

Issued in Washington, DC, on November 3, 2014, by the Commission.

Christopher J. Kirkpatrick,

Secretary of the Commission.

Note: The following appendices will not appear in the Code of Federal Regulations.

Appendices to Residual Interest Deadline for Futures Commission Merchants—Commission Voting Summary and Chairman's Statement Appendix 1—Commission Voting Summary

On this matter, Chairman Massad and Commissioners Wetjen, Bowen, and Giancarlo voted in the affirmative. No Commissioner voted in the negative.

Appendix 2—Statement of Chairman Timothy G. Massad

I support the Staff's recommendation. One of my priorities has been to fine-tune our rules to make sure they work as intended and do not impose undue burdens or unintended consequences, particularly for the nonfinancial commercial businesses that use these markets to hedge commercial risks. The proposed amendment is consistent with that goal. It is designed to help ensure that the funds deposited by customers with Futures Commission Merchants, or FCMs, remain safe. It is not a major change, but it is significant in making sure that manufacturers, farmers, ranchers, and other companies that rely on the derivatives markets to hedge routine business risks can continue to use them efficiently and effectively.

The rule prohibits an FCM from using customer funds of one customer for the benefit of another customer. Last fall, the Commission amended Regulation 1.22 to further enhance the safety of such funds by making sure that customer accounts have sufficient margin. On any day when a customer is required to post additional margin but has not yet done so, the FCM must maintain its own capital—often referred to as the FCM's ''Residual Interest''—in customer segregated accounts to make up the difference. The amendments provided that the FCM must deposit the additional funds by a specified deadline. Specifically, the amendments said that as of November 14, 2014, the deadline would be 6:00 p.m. Eastern Time on the settlement date. The deadline for the FCMs to post their capital affects the deadline for customers to increase their own funds.

The amendments passed last fall also provide that the Commission will conduct a study, and solicit public comment—including by way of a public roundtable—concerning the practicability, for both FCMs and their customers, of moving that deadline from 6:00 p.m. to the morning daily clearing settlement cycle or the time of settlement, which I will refer to as 9:00 a.m. for convenience. The amendments said the Commission would decide, within nine months after publication of the report, whether to move the deadline to 9:00 a.m. Finally, the amendments said that if the Commission failed to take any action, the deadline would automatically move to 9:00 a.m. as of December 31, 2018.

Today, we are making a minor, but important, change. We are proposing to eliminate the provision that says the deadline will automatically move to 9:00 a.m. as of December 31, 2018. The deadline will still move to 6:00 p.m. as of November 14 of this year, and we will still conduct a study of the practicability of making the deadline earlier. An earlier residual interest deadline better protects customers from one another, in line with the statute, but we want to make sure we move deliberately so that the model works best for customers in light of all of their interests, since the deadline will affect how much margin customers have to post and when. Today's proposal will make sure that customers have an opportunity to not only review the study but give us input when we consider whether to accelerate the deadline.

[FR Doc. 2014–26978 Filed 11–13–14; 8:45 am]

BILLING CODE 6351–01–P

POSTAL REGULATORY COMMISSION

39 CFR Part 3050

[Docket Nos. RM2015–4; Order No. 2244]

Periodic Reporting

AGENCY: Postal Regulatory Commission.

ACTION: Notice of proposed rulemaking.

SUMMARY: The Commission is noticing a recent Postal Service filing concerning a Proposed Rulemaking on Analytical Principles Used in Periodic Reporting (Proposal Eleven). This document informs the public of the filing, invites public comment, and takes other administrative steps.

DATES: *Comments are due:* November 25, 2014. *Reply Comments are due:* December 11, 2014.

ADDRESSES: Submit comments electronically via the Commission's Filing Online system at *http://www.prc.gov.* Those who cannot submit comments electronically should contact the person identified in the **FOR FURTHER INFORMATION CONTACT** section by telephone for advice on filing alternatives.

FOR FURTHER INFORMATION CONTACT: David A. Trissell, General Counsel, at 202–789–6820.

SUPPLEMENTARY INFORMATION:

Table of Contents

I. Introduction
II. Summary of Proposal
III. Initial Commission Action
IV. Ordering Paragraphs

I. Introduction

On November 4, 2014, the Postal Service filed a petition pursuant to 39 CFR 3050.11 requesting that the Commission initiate an informal rulemaking proceeding to consider changes to analytical principles relating to periodic reports.[1] It identifies the change filed in this docket as Proposal Eleven, Change in the Attribution of Debit and Credit Card Fees. *Id.,* Attachment at 1. The Postal Service concurrently filed one library reference, along with an application for nonpublic treatment.[2]

II. Summary of Proposal

Currently, the Postal Service records payments of debit and credit card fees in two general ledger accounts, assigns the fees to two different cost segments, and uses two different keys to distribute costs to products and services (total postal labor costs and window service volume variability). Petition, Attachment at 2. This results in approximately 42 percent of total debit and credit card fees being classified as volume variable. *Id.* The remaining 58 percent of the fees are classified as institutional costs, and are not assigned to any products. *Id.*

The Postal Service proposes replacing this methodology with one based on the revenue generated when debit or credit cards are used to pay the Postal Service for products or services. *Id.* Reports of revenue by product from each of the major revenue reporting systems (POS–1, etc.) will be combined and grouped by product. Each product's percentage of total revenue that is paid with debit and credit cards will then be calculated. The resulting percentage will serve as the distribution for debit and credit card fees. *Id.* The distribution key will be applied to the aggregate fee amounts from the general ledger accounts. *Id.* at 3. All debit and credit card fees will be captured in one cost segment (13.3). *Id.*

The Postal Service asserts that the proposed approach will allow it to more accurately assign debit and credit card fees to the products that were purchased using debit and credit cards. *Id.*

Cost impacts. The Postal Service states that as a result of no longer using window service volume variability, a higher percentage of debit and credit card fees will be attributed to the products or services that caused the fees. *Id.* The Postal Service states the current methodology attributed approximately $83.3 million of $200 million in debit and credit card fees to products and fees. *Id.* It states that under the proposed methodology, approximately $196.9 million would be

[1] Petition of the United States Postal Service for the Initiation of a Proceeding to Consider Proposed Changes in Analytical Principles (Proposal Eleven), November 4, 2014 (Petition).

[2] Notice of Filing of USPS–RM2015–4/NP1 and Application for Nonpublic Treatment, November 4, 2014 (Notice of Filing). The Notice of Filing incorporates by reference the Application for Non-Public Treatment of Materials contained in Attachment Two to the December 27, 2013 United States Postal Service Fiscal Year 2013 Annual Compliance Report. Notice of Filing at 1. See 39 CFR part 3007 for information on access to non-public material.

attributed. *Id.* It also presents a comparison of the fiscal year 2013 debit and credit card distribution keys using the current and proposed methods for market dominant products. *Id.* An expanded set of impact tables showing comparable figures for competitive products appears in USPS–RM2015–4/NP1. *Id.*

III. Initial Commission Action

The Commission establishes Docket No. RM2015–4 for consideration of matters raised by the Petition. Additional information concerning the Petition may be accessed via the Commission's Web site at *http://www.prc.gov.* Interested persons may submit comments on the Petition no later than November 25, 2014. Reply comments are due no later than December 11, 2014. Pursuant to 39 U.S.C. 505, Curtis E. Kidd is designated as officer of the Commission (Public Representative) to represent the interests of the general public in this proceeding.

IV. Ordering Paragraphs

It is ordered:

1. The Commission establishes Docket No. RM2015–4 for consideration of the matters raised by the Petition of the United States Postal Service for the Initiation of a Proceeding to Consider Proposed Changes in Analytical Principles (Proposal Eleven), filed November 4, 2014.

2. Comments are due no later than November 25, 2014.

3. Reply comments are due no later than December 11, 2014.

4. Pursuant to 39 U.S.C. 505, the Commission appoints Curtis E. Kidd to serve as an officer of the Commission (Public Representative) to represent the interests of the general public in this docket.

5. The Secretary shall arrange for publication of this order in the **Federal Register**.

By the Commission.

Ruth Ann Abrams,

Acting Secretary.

[FR Doc. 2014–26929 Filed 11–13–14; 8:45 am]

BILLING CODE 7710–FW–P

ENVIRONMENTAL PROTECTION AGENCY

40 CFR Part 63

[EPA–HQ–OAR–2010–0895; FRL–9919–15–OAR]

RIN 2060–AQ11

National Emission Standards for Hazardous Air Pollutants: Ferroalloys Production; Extension of Comment Period

AGENCY: Environmental Protection Agency.

ACTION: Supplemental notice of proposed rulemaking; extension of public comment period.

SUMMARY: The Environmental Protection Agency (EPA) is announcing that the period for providing public comments on the October 6, 2014, supplemental proposed rule titled ''National Emission Standards for Hazardous Air Pollutants: Ferroalloys Production'' is being extended for 18 days.

DATES: *Comments.* The public comment period for the supplemental proposed rule published in the **Federal Register** on October 6, 2014, (79 FR 60238) is being extended for 18 days to December 8, 2014, in order to provide the public additional time to submit comments and supporting information. The EPA received a request for an extension from Eramet Marietta, Incorporated and Felman Production, LLC in order to gather and analyze data and formulate their comments on the supplemental proposed amendments.

ADDRESSES: *Comments.* Written comments on the supplemental proposed rule may be submitted to EPA electronically, by mail, by facsimile or through hand delivery/courier. Please refer to the supplemental proposal (79 FR 60238) for the addresses and detailed instructions.

Docket. Publicly available documents relevant to this action are available for public inspection either electronically at: *http://www.regulations.gov* or in hard copy at the EPA Docket Center, Room 3334, 1301 Constitution Avenue NW., Washington, DC. The Public Reading Room is open from 8:30 a.m. to 4:30 p.m., Monday through Friday, excluding legal holidays. A reasonable fee may be charged for copying. The official public docket for this rulemaking is Docket No. EPA–HQ–OAR–2010–0895.

World Wide Web. The EPA Web site for this rulemaking is at: *http://www.epa.gov/ttn/atw/ferroa/ferropg.html.*

FOR FURTHER INFORMATION CONTACT: Mr. Phil Mulrine, Metals and Inorganic Chemicals Group (D243–02), Sector Policies and Programs Division, Office of Air Quality Planning and Standards, U.S. Environmental Protection Agency, Research Triangle Park, North Carolina 27711; Telephone number: (919) 541–5289; Fax number (919) 541–3207; Email address: *mulrine.phil@epa.gov.*

SUPPLEMENTARY INFORMATION:

Comment Period

After considering the requests received from Eramet Marietta, Incorporated and Felman Production, LLC to extend the public comment period, the EPA has decided to extend the public comment period for an additional 18 days. Therefore, the public comment period will end on December 8, 2014, rather than November 20, 2014. This extension will help ensure that the public has sufficient time to review the proposed rule and the supporting technical documents and data available in the docket.

List of Subjects in 40 CFR Part 63

Air pollution control, Environmental protection, Hazardous substances, Incorporation by reference, Reporting and recordkeeping requirements.

Dated: November 5, 2014.

Mary E. Henigin,

Acting Director, Office of Air Quality Planning and Standards.

[FR Doc. 2014–27009 Filed 11–13–14; 8:45 am]

BILLING CODE 6560–50–P

ENVIRONMENTAL PROTECTION AGENCY

40 CFR Part 171

[EPA–HQ–OPP–2005–0561; FRL–9915–88]

RIN 2070–AJ20

Notification of Submission to the Secretary of Agriculture; Certification of Pesticide Applicators Rule Revisions

AGENCY: Environmental Protection Agency (EPA).

ACTION: Notification of submission to the Secretary of Agriculture.

SUMMARY: This document notifies the public as required by the Federal Insecticide, Fungicide, and Rodenticide Act (FIFRA) that the EPA Administrator has forwarded to the Secretary of the United States Department of Agriculture (USDA) a draft regulatory document concerning the certification of pesticide applicators rule revisions. The draft

regulatory document is not available to the public until after it has been signed and made available by EPA.

DATES: See Unit I. under **SUPPLEMENTARY INFORMATION.**

ADDRESSES: The docket for this action, identified by docket identification (ID) number EPA–HQ–OPP–2005–0561, is available at *http://www.regulations.gov* or at the Office of Pesticide Programs Regulatory Docket (OPP Docket) in the Environmental Protection Agency Docket Center (EPA/DC), West William Jefferson Clinton Bldg., Rm. 3334, 1301 Constitution Ave. NW., Washington, DC 20460–0001. The Public Reading Room is open from 8:30 a.m. to 4:30 p.m., Monday through Friday, excluding legal holidays. The telephone number for the Public Reading Room is (202) 566–1744, and the telephone number for the OPP Docket is (703) 305–5805. Please review the visitor instructions and additional information about the docket available at *http://www.epa.gov/dockets.*

FOR FURTHER INFORMATION CONTACT: Michelle Arling, Field and External Affairs Division (7506P), Office of Pesticide Programs, Environmental Protection Agency, 1200 Pennsylvania Ave. NW., Washington, DC 20460–0001; telephone number: (703) 308–5891; email address: *arling.michelle@epa.gov.*

SUPPLEMENTARY INFORMATION:

I. What action is EPA taking?

Section 25(a)(2)(A) of FIFRA requires the EPA Administrator to provide the Secretary of USDA with a copy of any draft proposed rule at least 60 days before signing it in proposed form for publication in the **Federal Register**. The draft proposed rule is not available to the public until after it has been signed by EPA. If the Secretary of USDA comments in writing regarding the draft proposed rule within 30 days after receiving it, the EPA Administrator shall include the comments of the Secretary of USDA and the EPA Administrator's response to those comments with the proposed rule that publishes in the **Federal Register**. If the Secretary of USDA does not comment in writing within 30 days after receiving the draft proposed rule, the EPA Administrator may sign the proposed rule for publication in the **Federal Register** any time after the 30-day period.

II. Do any statutory and executive order reviews apply to this notification?

No. This document is merely a notification of submission to the Secretary of USDA. As such, none of the regulatory assessment requirements apply to this document.

List of Subjects in Part 171

Environmental protection, Applicator competency, Agricultural worker safety, Pesticide safety training, Pesticide worker safety, Pesticides and pests, Restricted use pesticides.

Dated: November 3, 2014.

William L. Jordan,

Acting Director, Office of Pesticide Programs.

[FR Doc. 2014–26895 Filed 11–13–14; 8:45 am]

BILLING CODE 6560–50–P

ENVIRONMENTAL PROTECTION AGENCY

40 CFR Part 180

[EPA–HQ–OPP–2006–0766; FRL–9918–40]

RIN 2070–AJ28

Tolerance Crop Grouping Program IV

AGENCY: Environmental Protection Agency (EPA).

ACTION: Proposed rule.

SUMMARY: EPA is proposing revisions to its pesticide tolerance crop grouping regulations, which allow the establishment of tolerances for multiple, related crops based on data from a representative set of crops. EPA is proposing five new crop groups, two new and two revised commodity definitions, and revisions to the regulations on the interaction of crop group tolerances with processed food tolerances and meat, milk, and egg tolerances. Once final, EPA expects these revisions to promote greater use of crop groupings for tolerance-setting purposes, both domestically and in countries that export food to the United States. This is the fourth in a series of planned crop group updates expected to be proposed over the next several years.

DATES: Comments must be received on or before January 13, 2015.

ADDRESSES: Submit your comments, identified by docket identification (ID) number EPA–HQ–OPP–2006–0766, by one of the following methods:

- *Federal eRulemaking Portal: http://www.regulations.gov.* Follow the online instructions for submitting comments. Do not submit electronically any information you consider to be Confidential Business Information (CBI) or other information whose disclosure is restricted by statute.
- *Mail:* OPP Docket, Environmental Protection Agency Docket Center (EPA/DC), (28221T), 1200 Pennsylvania Ave. NW., Washington, DC 20460–0001.
- *Hand Delivery:* To make special arrangements for hand delivery or delivery of boxed information, please follow the instructions at *http://www.epa.gov/dockets/contacts.html.*

Additional instructions on commenting or visiting the docket, along with more information about dockets generally, is available at *http://www.epa.gov/dockets.*

FOR FURTHER INFORMATION CONTACT: Barbara Madden, Registration Division (7505P), Office of Pesticide Programs, Environmental Protection Agency, 1200 Pennsylvania Ave. NW., Washington, DC 20460–0001; telephone number: (703) 305–6463; email address: *madden.barbara@epa.gov.*

SUPPLEMENTARY INFORMATION:

I. General Information

A. Legal Authority

EPA is initiating this rulemaking to amend the existing crop grouping regulations under section 408(e)(1)(C) of the Federal Food, Drug, and Cosmetic Act (FFDCA), which authorizes EPA to establish ''general procedures and requirements to implement [section 408].'' 21 U.S.C. 346a(e)(1)(C). Under FFDCA section 408, EPA is authorized to establish tolerances for pesticide chemical residues in food. EPA establishes tolerances for each pesticide based on the potential risks to human health posed by that pesticide. A tolerance is the maximum permissible residue level established for a pesticide in raw agricultural produce and processed foods. The crop group regulations currently in §§ 180.40 and 180.41 enable the establishment of tolerances for a group of crops based on residue data for certain crops that are representative of the group and have been established under FFDCA section 408(e)(1)(C).

B. Does this action apply to me?

You may be potentially affected by this action if you are an agricultural producer or food manufacturer. The following list of North American Industrial Classification System (NAICS) codes is not intended to be exhaustive, but rather provides a guide to help readers determine whether this document applies to them. Potentially affected entities may include:

- Crop production (NAICS code 111).
- Animal production (NAICS code 112).
- Food manufacturing (NAICS code 311).
- Pesticide manufacturing (NAICS code 32532).

C. What should I consider as I prepare my comments for EPA?

1. *Submitting CBI.* Do not submit this information to EPA through

regulations.gov or email. Clearly mark the part or all of the information that you claim to be CBI. For CBI information in a disk or CD–ROM that you mail to EPA, mark the outside of the disk or CD–ROM as CBI and then identify electronically within the disk or CD–ROM the specific information that is claimed as CBI. In addition to one complete version of the comment that includes information claimed as CBI, a copy of the comment that does not contain the information claimed as CBI must be submitted for inclusion in the public docket. Information so marked will not be disclosed except in accordance with procedures set forth in 40 CFR part 2.

2. *Tips for preparing your comments.* When preparing and submitting your comments, see the commenting tips at *http://www.epa.gov/dockets/comments.html.*

II. Background

A. Tolerance-Setting Requirements and Petitions From the Interregional Research Project Number 4 (IR–4) To Expand the Existing Crop Grouping System

EPA is authorized to establish maximum residue limits (MRLs) or tolerances for pesticide chemical residues in or on food commodities under FFDCA section 408 (21 U.S.C. 346a). EPA establishes pesticide tolerances only after determining that aggregate exposure to the pesticide is considered safe. The U.S. Food and Drug Administration (FDA) and the U.S. Department of Agriculture (USDA) enforce compliance with tolerance limits.

Traditionally, tolerances are established for a specific pesticide and commodity combination. However, under EPA's crop grouping regulations (§ 180.41), a single tolerance may be established that applies to a group of related commodities. For example, Leafy Vegetable Crop Group 4–14 is proposed to include 62 commodities, with head lettuce, leaf lettuce, spinach, and mustard greens as the representative crops. Crop group tolerances may be established based on residue data from designated representative commodities within the group. Representative commodities are selected based on EPA's determination that they are likely to bear the maximum level of residue that could occur on any crop within the group. Once a crop group tolerance is established, the tolerance level applies to all commodities within the group.

This proposed rule is the fourth in a series of planned crop group amendments expected to be completed over the next several years. Specific information regarding the history of the crop group regulations, the previous amendments to the regulations and the process for amending crop groups can be found in the **Federal Register** of May 23, 2007 (Ref. 1). Specific information regarding how the Agency implements crop group amendments can be found in § 180.40(j).

This proposal is based upon five petitions developed by the International Crop Grouping Consulting Committee (ICGCC) workgroup and submitted to EPA by a nation-wide cooperative project, IR–4. These petitions and the supporting monographs are included in the docket for this action, under docket ID number EPA–HQ–OPP–2006–0766 at *http://regulations.gov.* EPA expects that a series of additional petitions seeking amendments and changes to the crop grouping regulations (§ 180.41) will originate from the ICGCC workgroup over the next several years.

EPA believes that this proposal is a burden-reducing regulation. It will provide for greater sharing of data by permitting the results from a magnitude of residue field trial studies in one crop to be applied to other, similar crops. The primary beneficiaries are minor crop producers and consumers. Minor crop producers will benefit because lower registration costs will encourage more products to be registered on minor crops, providing additional tools for pest control. Consumers are expected to benefit by having more affordable and abundant food products available. Secondary beneficiaries include pesticide registrants, as expanded markets for pesticide products will lead to increased sales.

EPA believes that data from representative crops will not underestimate the public exposure to pesticide residues through the consumption of treated crops. IR–4, which is publicly funded, will also more efficiently use resources as a result of this rule. Revisions to the crop grouping scheme will result in no appreciable costs or negative impacts to consumers, minor crop producers, pesticide registrants, the environment, or human health.

B. International Considerations

1. *North American Free Trade Agreement (NAFTA) partner involvement in proposal.* EPA's Office of Pesticide Programs' Chemistry Science Advisory Council (ChemSAC), an internal Agency peer review committee, provided a detailed analysis for each proposed crop group to Canada's Pest Management Regulatory Agency (PMRA), IR–4, and the government of Mexico for their review and comment, and invited these parties to participate in the ChemSAC meeting to finalize the recommendations for each petition.

PMRA has indicated that it will, in parallel with the United States effort and under the authority of Canada's Pest Control Products (PCP) Act (2002), establish equivalent crop groups. Additionally, once the new crop groups become effective in the United States, Mexico will have them as a reference for the establishment of maximum residue limits in Mexico.

2. *Relationship of proposal to Codex activities.* The United States and Canadian Delegations to the Codex Committee on Pesticide Residues (CCPR) have an ongoing effort to harmonize the NAFTA crop groups and representative commodities with those being developed by Codex, an international commission created to develop international food standards, guidelines and related texts, as part of their revision of the *Codex Classification of Foods and Feeds.* Canada and the United States are working closely with the Chairs of the Codex group for this project (The Netherlands and the United States) to coordinate the U.S. crop group amendments with the efforts to amend the Codex crop groups. The goals of coordinating these NAFTA activities with Codex activities are to minimize differences within and among the Unites States and Codex groups and to develop representative commodities for each group that will be acceptable on an international basis. These efforts could lead to the increased harmonization of tolerances and MRL recommendations.

C. Scheme for Organization of Revised and Pre-Existing Crop Groups

EPA has amended the generic crop group regulations to include an explicit scheme for how revised crop groups will be organized in the regulations.

In brief, the regulations now specify that when a crop group is amended in a manner that expands or contracts its coverage of commodities, EPA will retain the pre-existing crop group in § 180.41; insert the new, related crop group immediately after the pre-existing crop group in the Code of Federal Regulations (CFR); and title the new, related crop group in a way that clearly differentiates it from the pre-existing crop group. The new, related crop group will retain roughly the same name and number as the pre-existing group except that the number will be followed by a hyphen and the final two digits of the year it is established. For example, EPA is proposing to revise Crop Group 5:

Brassica Leafy Vegetables. The revised group is proposed be titled Crop Group 5–14: Head and Stem Brassica Vegetable. Although EPA will initially retain pre-existing crop groups that have been superseded by new crop groups, EPA will not establish new tolerances under the pre-existing groups. Further, EPA plans to eventually convert tolerances for any pre-existing crop groups to tolerances with the coverage of the new crop group. This conversion will be effected both through the registration review process and in the course of establishing new tolerances for a pesticide. To this end, EPA requests that petitioners for tolerances address this issue in their petitions.

III. Specific Proposed Revisions

This unit explains the proposed amendments to the crop group regulations.

A. Crop Group 4–14: Leafy Vegetable Group

EPA is proposing to expand Leafy Vegetable, except Brassica Crop Group 4 to both add and remove commodities and to restructure the group. EPA proposes to name the new crop group the Leafy Vegetable Crop Group 4–14.

1. *Add new commodities.* In creating new Crop Group 4–14, EPA proposes to include most, but not all, commodities currently in Crop Group 4 and to add the following 41 commodities currently not in Crop Group 4: Aster, Indian, *Kalimeris indica* (L.) Sch. Bip.; Blackjack, *Bidens pilosa* L.; broccoli raab, *Brassica ruvo* L.H. Bailey; broccoli, Chinese, *Brassica oleracea* var. *alboglabra* (L.H. Bailey) Musil; cabbage, abyssinian, *Brassica carinata* A. Braun; cabbage, seakale, *Brassica oleracea* L. var. *costata* DC.; Cat's whiskers, *Cleome gynandra* L.; Cham-chwi, *Doellingeria scabra* (Thunb.) Nees; Cham-na-mul, *Pimpinella calycina* Maxim; Chinese cabbage, bok choy, *Brassica rapa* subsp. *chinensis* (L.) Hanelt; Chipilin, *Crotalaria longirostrata* Hook & Arn; cilantro, fresh leaves, *Coriandrum sativum* L.; collards, *Brassica oleracea* var. *Viridis* L.; Cosmos, *Cosmos caudatus* Kunth; Dang-gwi, *Angelica gigas;* dillweed, *Anethum graveolens* L.; Dol-nam-mul, *Sedum sarmentosum* Bunge; Ebolo, *Crassocephalum crepidioides* (Benth.) S. Moore; escarole, *Cichorium endive* L. subsp. *endiva;* Fameflower, *Talinum fruticosum* (L.) Juss.; Feather cockscomb, *Glinus oppositifolius* (L.) Aug. DC.; Good King Henry, *Chenopodium bonus-henricus* L.; Hanover salad, *Brassica napus* var. *Pabularia* (DC.) Rchb.; Huauzontle, *Chenopodium berlandieri* Moq.; jute, leaves, *Corchorus* spp.; kale, *Brassica oleracea* var. *Sabellica* L;lettuce, bitter, *Launaea cornuta* (Hochst. ex Oliv. & Hiern) C. Jeffrey; Maca, *Lepidium meyenii* Walp.; Mizuna, *Brassica rapa* L. subsp. *nipposinica* (L. H. Bailey) Hanelt; mustard greens, *Brassica juncea* subsp., including *Brassica juncea* (L.) Czern. subsp. *integrifolia* (H. West) Thell., *Brassica juncea* (L.) Czern. var. *tsatsai* (T. L. Mao) Gladis; primrose, English, *Primula vulgaris* Huds.; radish, leaves, *Raphanus sativus* L. var *sativus,* including *Raphanus sativus* L. var. *mougri* H. W. J. Helm and *Raphanus sativus* L. var. *oleiformis* Pers; rape greens, *Brassica napus* L. var. *napus,* including *Brassica rapa* subsp. *trilocularis* (Roxb.) Hanelt, *Brassica rapa* subsp. *dichotoma* (Roxb.) Hanelt, and *Brassica rapa* subsp. *oleifera* Met; Rocket, wild, *Diplotaxis tenuifolia* (L.) DC.; Shepherd's purse, *Capsella bursa-pastoris* (L.) Medik; spinach, malabar, *Basella alba* L.; spinach, tanier, *Xanthosoma brasiliense* (Desf.) Engl.; turnip greens, *Brassica rapa* L. subsp. *Rapa;* Violet, Chinese, *Asystasia gangetica* (L.) T. Anderson; and watercress, *Nasturtium officinale* W. T. Aiton. Also included are cultivars, varieties, and hybrids of these commodities.

Included in this list of commodities are seven brassica leafy vegetables currently in Crop Group 5: Broccoli raab, Chinese cabbage (bok choy), collards, kale, mizuna, mustard greens, and rape greens. These seven commodities represent all current members of Crop subgroup 5B, with the exception of mustard spinach. Mustard spinach has not been proposed for inclusion in Crop Group 4–14 because it is one of several common names for mustard greens, which is already proposed for inclusion in Crop Group 4–14. EPA is proposing a corresponding change to Crop Group 5, which will be incorporated in the proposed new Crop Group 5–14.

The 41 new commodities proposed for Crop Group 4–14 were chosen based on similarities between the existing and additional commodities in plant morphology; cultural practices, including that all commodities are row crops; pest problems; edible food portions and lack of animal feed portions; potential exposures to residues resulting from application of specific pesticides; geographical locations; processing; and established tolerances. In particular, the brassica leafy vegetables are proposed to be moved from Crop Group 5 to revised Crop Group 4–14 because leafy brassica leafy vegetables are similar in growth pattern, leaf exposure and pesticide residues to the other leafy vegetables in Crop Group 4–14, and dissimilar from the crops in Crop Group 5, which are grown and consumed for their stem or bulb. Moreover, the leaf morphology of the moved crops leads to residues that can be higher than in broccoli and cabbage, Crop Group 5's representative commodities.

Cardoon, celery, Chinese celery, celtuce, Florence fennel, and rhubarb, which are currently included in Crop Group 4, are not proposed for Crop Group 4–14 but rather new Crop Group 22 Stalk, Stem and Leaf Petiole. The plant morphology of these six crops is more similar to crops grown and consumed for their stalk, stem, and leaf petiole, rather than for their leaves alone as are the crops in Crop Group 4–14. Edible-leaved chrysanthemum, which is also in Crop Group 4, has not been proposed for inclusion in Crop Group 4–14 because it is another common name for chrysanthemum garland, which is already included in Crop Group 4 and is proposed for inclusion in Crop Group 4–14.

2. *Representative commodities for new crop group.* The representative commodities in Crop Group 4 are celery, head lettuce, leaf lettuce, and spinach. EPA proposes the following representative commodities for Crop Group 4–14: Head lettuce, leaf lettuce, spinach, and mustard greens. Generally, the selection of representative commodities is based on a representative commodity that is most likely to: Contain the highest residues (whether raw or processed); be major in terms of production and consumption; and be similar in morphology, growth habit, pest problems and edible portion, and subject to similar processing as the related commodities within a group or subgroup. The representative commodities proposed for Crop Group 4–14 represent over 93% of the total leafy vegetable harvested acres reported by USDA's Census of Agriculture and are the highest consumed commodities on a per capita basis in the group; therefore, these commodities were chosen to represent Crop Group 4–14. Inclusion of brassica leafy vegetables in a separate subgroup is desirable because of potentially different actions of herbicides on leafy Brassica vegetables, verses other leafy, non-brassica crops.

3. *New subgroups.* The existing Crop Group 4 subgroups are Leafy greens, subgroup 4A, and Leaf petioles, subgroup 4B. In light of the significant differences between existing Crop Group 4 and proposed Crop Group 4–14, EPA is proposing the following subgroups for Crop Group 4–14:

i. *Leafy greens subgroup 4–14A.* (Representative commodities-Head

lettuce, Leaf lettuce, and Spinach). EPA proposes that subgroup 4–14A include the following 27 commodities in addition to the 20 commodities that currently are included in subgroup 4A: Amaranth, Chinese; Amaranth, leafy; Aster, Indian; Blackjack; Cat's whiskers; Cham-chwi; Cham-na-mul; Chipilin; cilantro, fresh leaves; Cosmos; Dang-gwi; dillweed; Dol-nam-mul; Ebolo; escarole; Fameflower; Feather cockscomb; Good King Henry; Huauzontle; jute, leaves; lettuce, bitter; plantain, buckthorn; Primrose, English; spinach, malabar; spinach, tanier; Swiss chard; and Violet, Chinese. Also included are cultivars, varieties, and hybrids of these commodities.

Swiss chard is proposed for inclusion in subgroup 4–14A because both the leaves and petioles are consumed and the leaves constitute a major portion of the plant, whereas that is not the case for the brassica leafy greens in subgroup 4–14B. Arugula, upland cress, and garden cress are currently members of Crop subgroup 4A; however, these commodities are members of the *Brassicaceae* family and are therefore proposed for inclusion in subgroup 4–14B, because of their similarities to the other commodities proposed in that subgroup.

Leafy greens subgroup 4–14A is proposed to have head lettuce, leaf lettuce, and spinach as the representative commodities, which are the same as the current Leafy Greens subgroup 4A.

ii. *Brassica leafy greens subgroup 4–14B.* (Representative commodity-Mustard greens). As previously discussed, EPA is proposing to add eight brassica leafy vegetables currently in Crop Group 5 (those included in Crop subgroup 5B, except mustard spinach) to Crop Group 4–14. EPA is also proposing to create a subgroup in new Crop Group 4–14 for these commodities and 12 other similar commodities. This new subgroup 4–14B is proposed to include the following 20 commodities: Arugula; broccoli raab; broccoli, Chinese; cabbage, abyssinian; cabbage, seakale; Chinese cabbage, bok choy; collards; cress, garden; cress, upland; Hanover salad; kale; Maca; Mizuna; mustard greens; radish, leaves; rape greens; Rocket, wild; Shepherd's purse; turnip greens; and watercress. Also included are cultivars, varieties, and hybrids of these commodities.

Arugula, upland cress, and garden cress are proposed for inclusion in new subgroup 4–14B because these commodities are members of the *Brassicaceae* family. Inclusion of brassica leafy vegetables in a separate subgroup is desirable because of potentially different actions of herbicides on leafy brassica vegetables, versus other leafy (non-brassica) crops.

EPA proposes these additional commodities in Crop subgroups 4–14A and 4–14B because of the similarities in cultural practices, potential residue exposures, dietary consumption importance, and the lack of animal feed items. A comparison of existing tolerances supports the proposed subgroups and representative commodities for Crop Group 4–14.

EPA is not proposing to carry Leaf petiole subgroup 4B over to Crop Group 4–14 because, as previously discussed, most of the crops in that group are being proposed for inclusion in the new proposed Stalk, Stem, and Leaf Petiole Crop Group 22.

B. Crop Group 5–14: Head and Stem Brassica Vegetable Group

EPA is proposing to amend Brassica (Cole) Leafy Vegetables Crop Group 5, to remove commodities and to restructure the group. EPA proposes to name the new crop group the Brassica Head and Stem Vegetable Crop Group 5–14.

1. *Commodities not included.* EPA proposes to not include eight commodities currently in Crop Group 5 (Chinese broccoli (gai lon); broccoli raab (rapini); cabbage, Chinese (bok choy); collards; kale; mizuna; mustard greens; and rape greens) in Crop Group 5–14 because, as previously discussed, the commodities are being included in Crop Group 4–14. EPA also proposes to not include one other commodity currently in Crop Group 5 (kohlrabi) in Crop Group 5–14. Kohlrabi is proposed to be included in the proposed new Stalk, Stem, and Leaf Petiole Crop Group 22, as the kohlrabi's exposed, enlarged, and bulb-like stem can have higher pesticide residues than the proposed representative commodities (broccoli or cabbage) for new Crop Group 5–14.

Two other commodity terms are not being carried over from Crop Group 5 to new Crop Group 5–14. First, Chinese mustard cabbage is not a distinct crop, but rather a common name that refers to various leafy non-heading Brassica greens. The brassica leafy greens have been proposed for new Crop Group 4–14. The term Chinese mustard cabbage is also not proposed for new Crop Group 5–14 because of its non-distinctive nature. Second, cavalo broccoli is the same species as cauliflower, and the name was used to refer to various types of broccoli or cauliflower in the past. It is not proposed for inclusion in new Crop Group 5–14 because of redundancy.

Thus, EPA is proposing that new Crop Group 5–14 contain the following commodities: Broccoli, *Brassica oleracea* L. var. *italica* Plenck; brussels sprouts, *Brassica oleracea* L. var. *gemmifera* (DC.) Zenker; cabbage, *Brassica oleracea* L. var. *capitata* L.; cabbage, Chinese, napa, *Brassica rapa* L. subsp. *pekinensis* (Lour.) Hanelt; and cauliflower, *Brassica oleracea* L. var. *capitata* L. Also included are cultivars, varieties, and hybrids of these commodities.

The commodities proposed for inclusion in new Crop Group 5–14 were chosen based on similarities in plant morphology; cultural practices, including that all are row crops; pest problems; edible food and animal feed portions; residue levels; geographical locations; processing; and established tolerances on these commodities. The commodities chosen for this crop group also further the goal of international harmonization of tolerances and other MRLs, through coordinating the U.S. crop group amendments with efforts to amend the Codex crop groups.

2. *Representative commodities.* The representative commodities in Crop Group 5 are broccoli or cauliflower, cabbage, and mustard greens. EPA proposes the following representative commodities for new Crop Group 5–14: Broccoli or cauliflower, and cabbage. These commodities are the same representative commodities as in Crop Group 5, except for mustard greens. EPA proposes to move those commodities currently represented by mustard greens to new Crop Group 4–14; therefore, mustard greens is not proposed as a representative commodity for new Crop Group 5–14. All other representative commodities are the same as those currently representing Crop Group 5, and are proposed to represent new Crop Group 5–14 group members because the proposed representative commodities are the most likely to: Contain the highest residues (whether raw or processed); be major in terms of production and consumption; and be similar in morphology, growth habit, pest problems and edible portion, and subject to similar processing as the related commodities within a group or subgroup. These representative commodities account for >99% of the harvested acres for the members of this amended crop group, and are the most widely grown Brassica head and stem commodities in the United States, with the largest acreages and geographical distribution. The representative commodities are based on similarities in its vegetable structures, exposure to residues, and cultural practices and geographical locations, as well as their high production (both acres and yield) and consumption. A comparison of

established tolerances on Crop subgroup 5A also supports that residue levels will be similar between members of the crop group.

3. *No subgroups in new Crop Group 5–14.* EPA proposes to not include subgroups in new Crop Group 5–14 given the small number of commodities.

C. Crop Group 22: Stalk, Stem, and Leaf Petiole Group

EPA is proposing to establish a new crop group, entitled Stalk, Stem, and Leaf Petiole Crop Group 22.

1. *Commodities.* EPA proposes to include the following 19 commodities in Crop Group 22: Agave, *Agave* spp.; aloe vera, *Aloe vera* (L.) Burm. f.; asparagus, *Asparagus officinalis* L; bamboo shoots, *Arundinaria* spp.; *Bambusa* spp., *Chimonobambusa* spp.; *Dendrocalamus* spp., *Fargesia* spp.; *Gigantochloa* spp., *Nastus elatus; Phyllostachys* spp.; *Thyrsostachys* spp.; cardoon, *Cynara cardunculus* L.; celery, *Apium graveolens* var. *dulce* (Mill.) Pers.; celery, Chinese, *Apium graveolens* L. var. *secalinum* (Alef.) Mansf.; Celtuce, *Lactuca sativa* var. *angustana* L.H. Bailey; fennel, Florence, fresh leaves and stalk, *Foeniculum vulgare* Mill. subsp. *vulgare* var. *azoricum* (Mill.) Thell.; fern, edible, fiddlehead; Fuki, *Petasites japonicus* (Siebold & Zucc.) Maxim.; kale, sea, *Crambe maritima* L.; Kohlrabi, *Brassica oleracea* L.var *gongylodes* L.; palm hearts, various species; Prickly pear, pads, *Opuntia ficus-indica* (L.) Mill., Opuntia spp.; Prickly pear, Texas, pads, *Opuntia engelmannii* Salm-Dyck ex Engelm. var. *lindheimeri* (Engelm.) B. D. Parfitt & Pinkav; rhubarb, *Rheum x hybridum* Murray; Udo, *Aralia cordata* Thunb.; and Zuiki, *Colocasia gigantea* (Blume) Hook. f. Also included are cultivars, varieties, and hybrids of these commodities.

The 19 members of the new proposed Stalk, Stem and Leaf Petiole Crop Group 22 are proposed based on similarities of the morphology of the stalk, stem, and leaf petiole vegetables; the cultural practices; the edible food and livestock feed portions; the plant exposure to pesticide residue levels; the geographical locations; the manner of processing; the food uses; and the established tolerances for the commodities. Additionally, the proposal of a separate new Stalk, Stem and Leaf Petioles Crop Group 22 will be similar to the Codex stalk and stem group.

As previously discussed, the new Crop Group 22 is proposed to include certain commodities currently in Crop Group 4, Leafy Vegetable, except Brassica (those in subgroup 4B, with the exception of Swiss chard). Additionally, kohlrabi, which is currently a member of Crop Group 5, Brassica (Cole) Leafy Vegetables Crop is proposed to be included in Crop Group 22. The reasons for these two proposed changes are discussed in Units III A.2. and III B.2.

2. *Representative commodities.* EPA proposes two representative commodities for new Stalk, Stem, and Leaf Petiole Crop Group 22: Asparagus and Celery.

The proposed representative commodities, asparagus and celery, were chosen because they account for >98% of the harvested acres and production for the proposed members of this group. They are the two most widely grown stalk, stem, and leaf petiole crops in the United States, with both the largest acreages and geographical distribution. The selection of representative commodities is based on a representative commodity that is most likely to: Contain the highest residues (whether raw or processed); be major in terms of production and consumption; and be similar in morphology, growth habit, pest problems and edible portion, and subject to similar processing as the related commodities within a group or subgroup.

3. *Crop subgroups.* EPA proposes new Stalk, Stem, and Leaf Petiole Crop Group 22 to have two crop subgroups:

i. *Stalk and stem vegetable subgroup 22A.* (Representative commodity—Asparagus). Twelve commodities are proposed for this subgroup: Agave; aloe vera; asparagus; bamboo shoots; Celtuce; fennel, Florence, fresh leaves and stalk; fern, edible; kale, sea; Kohlrabi; palm hearts; Prickly pear, pads; and Prickly pear, Texas, pads. Also included are cultivars, varieties, and hybrids of these commodities.

ii. *Leaf petiole vegetable subgroup 22B.* (Representative commodity—Celery). Seven commodities are proposed for subgroup: Cardoon; celery; celery, Chinese; Fuki; rhubarb; Udo; and Zuiki. Also included are cultivars, varieties, and hybrids of these commodities.

Comparisons of established tolerances on the commodities proposed for new Stalk and stem vegetable subgroup 22A and new Leaf petiole vegetable subgroup 22B support that residue levels will be similar between members of the crop group. Comparison of tolerances for the individual members of each subgroup also supports that these two representative commodities will support the crop subgroups.

4. *Commodity definitions.* In conjunction with new Crop Group 22, EPA proposes two new commodity definitions for fern, edible and palm hearts to be added to § 180.1(g), as specified in the proposed regulatory text. These commodity definitions are being proposed in order to easily distinguish and define the various varieties of edible ferns and palm hearts, respectively.

D. Crop Group 23: Tropical and Subtropical Fruit, Edible Peel Group

EPA is proposing to establish a new crop group, entitled Tropical and Subtropical Fruit, Edible Peel, Crop Group 23.

1. *Commodities.* EPA proposes to include the following 108 commodities in new Group 23: Açaí, *Euterpe oleracea* Mart.; Acerola, *Malpighia emarginata* DC.; African plum, *Vitex doniana* Sweet; Agritos, *Berberis trifoliolata* Moric.; Almondette, *Buchanania lanzan* Spreng.; Ambarella, *Spondias dulcis* Sol. ex Parkinson; Apak palm, *Brahea dulcis* (Kunth) Mart.; Appleberry, *Billardiera scandens* Sm.; Arazá, *Eugenia stipitata* McVaugh; Arbutus berry, *Arbutus unedo* L.; Babaco, *Vasconcellea* x *heilbornii* (V. M. Badillo) V. M. Badillo; Bacaba palm, *Oenocarpus bacaba* Mart.; Bacaba-de-leque, *Oenocarpus distichus* Mart.; Bayberry, Red, *Morella rubra* Lour.; Bignay, *Antidesma bunius* (L.) Spreng.; Bilimbi, *Averrhoa bilimbi* L.; Borojó, *Borojoa patinoi* Cuatrec.; Breadnut, *Brosimum alicastrum* Sw.; Cabeluda, *Plinia glomerata* (O. Berg) Amshoff; Cajou, fruit, *Anacardium giganteum* Hance ex Engl.; Cambucá, *Marlierea edulis* Nied.; Carandas-plum, *Carissa edulis* Vahl; Carob, *Ceratonia siliqua* L.; Cashew apple, *Anacardium occidentale* L.; Ceylon iron wood, *Manilkara hexandra* (Roxb.) Dubard; Ceylon olive, *Elaeocarpus serratus* L.; Cherry-of-the-Rio-Grande, *Eugenia aggregata* (Vell.) Kiaersk.; Chinese olive, black, *Canarium tramdenum* C. D. Dai & Yakovlev; Chinese olive, white, *Canarium album* (Lour.) Raeusch.; Chirauli-nut, *Buchanania latifolia* Roxb.; Ciruela verde, *Bunchosia armeniaca* (Cav.) DC.; Cocoplum, *Chrysobalanus icaco* L.; date, *Phoenix dactylifera* L.; Davidson's plum, *Davidsonia pruriens* F. Muell.; Desert-date, *Balanites aegyptiacus* (L.) Delile; Doum palm coconut, *Hyphaene thebaica* (L.) Mart.; False sandalwood, *Ximenia americana* L.; Feijoa, *Acca sellowiana* (O. Berg) Burret; fig, *Ficus carica* L.; Fragrant manjack, *Cordia dichotoma* G. Forst.; Gooseberry, abyssinian, *Dovyalis abyssinica* (A. Rich.) Warb.; Gooseberry, Ceylon, *Dovyalis hebecarpa* (Gardner) Warb.; Gooseberry, Indian, *Phyllanthus emblica* L.; Gooseberry, otaheite, *Phyllanthus acidus* (L.) Skeels; Governor's plum, *Flacourtia indica*

(Burm. F.) Merr.; Grumichama, *Eugenia brasiliensis* Lam; Guabiroba, *Campomanesia xanthocarpa* O. Berg; Guava, *Psidium guajava* L.; Guava berry, *Myrciaria floribunda* (H. West ex Willd.) O. Berg; Guava, Brazilian, *Psidium guineense* Sw.; Guava, cattley, *Psidium cattleianum* Sabine; Guava, Costa Rican, *Psidium friedrichsthalianum* (O. Berg) Nied.; Guava, para, *Psidium acutangulum* DC.; Guava, purple strawberry, *Psidium cattleianum* Sabine var. *cattleianum;* Guava, strawberry, *Psidium cattleianum* Sabine var. *littorale* (Raddi) Fosberg; Guava, yellow strawberry, *Psidium cattleianum* Sabine var. *cattleianum forma lucidum* O. Deg.; Guayabillo, *Psidium sartorianum* (O. Berg) Nied.; Illawarra plum, *Podocarpus elatus* R. Br. Ex Endl.; Imbé, *Garcinia livingstonei* T. Anderson; Imbu, *Spondias tuberosa* Arruda ex Kost.; Indian-plum, *Flacourtia jangomas* (Lour.) basionym); Jaboticaba, *Myrciaria cauliflora* (Mart.) O. Berg; Jamaica-cherry, *Muntingia calabura* L.; Jambolan, *Syzygium cumini* (L.) Skeels; Jelly palm, *Butia capitata* (Mart.) Becc.; Jujube, Indian, *Ziziphus mauritiana* Lam.; Kaffir-plum, *Harpephyllum caffrum* Bernh. Ex C. Krauss; Kakadu plum, *Terminalia latipes* Benth. subsp. *psilocarpa* Pedley; Kapundung, *Baccaurea racemosa* (Reinw.) Mull. Arg.; Karanda, *Carissa carandas* L.; Kwai muk, *Artocarpus hypargyreus* Hance ex Benth.; Lemon aspen, *Acronychia acidula* F. Muell; Mangaba, *Hancornia speciosa* Gomes; Marian plum, *Bouea macrophylla* Griff.; Mombin, malayan, *Spondias pinnata* (J. Koenig ex L. f.) Kurz; Mombin, purple, *Spondias purpurea* L.; Mombin, yellow, *Spondias mombin* L.; Monkeyfruit, *Artocarpus lacucha* Buch.-Ham.; Monos plum, *Pseudanamomis umbellulifera* (Kunth) Kausel; Mountain cherry, *Bunchosia cornifolia* Kunth; Nance, *Byrsonima crassifolia* (L.) Kunth; Natal plum, *Carissa macrocarpa* (Eckl.) A. DC; Noni, *Morinda citrifolia* L.; Olive, *Olea europaea* L. subsp. *europaea;* papaya, mountain, *Vasconcellea pubescens* A. DC.; Patauá, *Oenocarpus bataua* Mart.; Peach palm, fruit, *Bactris gasipaes* Kunth var. *gasipaes;* persimmon, black, *Diospyros texana* Scheele; persimmon, Japanese, *Diospyros kaki* Thunb.; Pitomba, *Eugenia luschnathiana* Klotzsch ex O. Berg; Plum-of-Martinique, *Flacourtia inermis* Roxb.; Pomerac, *Syzygium malaccense* (L.) Merr. & L.M. Perry; Rambai, *Baccaurea motleyana* (Mull. Arg.) Mull. Arg.; Rose apple, *Syzygium jambos* (L.) Alston; Rukam, *Flacourtia rukam* Zoll. & Moritizi; Rumberry, *Myrciaria dubia* (Kunth) McVaugh, (Myrtaceae); Sea grape, *Coccoloba uvifera* (L.) L.; Sentul, *Sandoricum koetjape* (Burm. F.) Merr.; Sete-capotes, *Campomanesia guazumifolia* (Cambess.) O. Berg; Silver aspen, *Acronychia wilcoxian,* (F. Muell.) T.G. Hartley; Starfruit, *Averrhoa carambola* L; Surinam cherry, *Eugenia uniflora* L.; Tamarind, *Tamarindus indica* L.; Uvalha, *Eugenia pyriformis* Cambess; Water apple, *Syzygium aqueum* (Burm. F.) Alston; Water pear, *Syzygium guineense* (Willd.) DC.; Water berry, *Syzygium cordatum* Hochst. Ex C. Krauss; and Wax jambu, *Syzygium sam*arangense (Blume) Merr. & L.M. Perry. Also included are cultivars, varieties, and hybrids of these commodities.

The commodities proposed for new Crop Group 23 are based on similarities in fruit size; peel (edible for all commodities); cultural practices; geographical distribution; lack of animal feed items; tolerance levels of established tolerances; and pest problems. The commodities chosen also further the goal of international harmonization of tolerances and MRLs, through coordinating the U.S. crop group amendments with efforts to amend the Codex crop groups.

2. *Representative commodities.* EPA proposes four representative commodities for Tropical and Subtropical Fruit, Edible Peel, Crop Group 23: Olive, Fig, Guava, and Date.

The proposed representative commodities were chosen because they account for >95% of the harvested U.S. acres for the members of the proposed Crop Group 23. The selection of representative commodities is based on a representative commodity that is most likely to: Contain the highest residues (whether raw or processed); be major in terms of production and consumption; and be similar in morphology, growth habit, pest problems and edible portion, and subject to similar processing as the related commodities within a group or subgroup. Comparison of the tolerances established for the representative commodities support that residue levels will adequately cover the wide number of commodities.

3. *Crop subgroups.* EPA proposes to create three crop subgroups for Tropical and Subtropical Fruit, Edible Peel Crop Group 23:

i. *Small fruit, edible peel subgroup 23A.* (Representative commodity—Olive). EPA is proposing 56 commodities for new subgroup 23A: Acerola; African plum; Agritos; Almondette; Appleberry; Arbutus berry; Bayberry, red; Bignay; Breadnut; Cabeluda; Carandas-plum; Ceylon iron wood; Ceylon olive; Cherry-of-the-Rio-Grande; Chinese olive, black; Chinese olive, white; Chirauli-nut; Cocoplum; Desert-date; False sandalwood; Fragant manjack; gooseberry, abyssinian; gooseberry, Ceylon; gooseberry, otaheite; Governor's plum; Grumichama; Guabiroba; guava berry; guava, Brazilian; guava, Costa Rican; Guayabillo; Illawarra plum; Indian-plum; Jamaica-cherry; Jambolan; Kaffir-plum; Kakadu plum; Kapundung; Karnada; Lemon aspen; Mombin, yellow; Monos plum; Mountain cherry; olive; persimmon, black; Pitomba; Plum-of-Martinique; Rukam; Rumberry; Sea grape; Sete-capotes; Silver aspen; Water apple; Water pear; Water berry; and Wax jambu. Also included are cultivars, varieties and hybrids of these commodities.

ii. *Medium to large fruit, edible peel subgroup 23B.* (Representative commodities—Fig and Guava). EPA is proposing 43 commodities for new subgroup 23B: Ambarella; Arazá; Babaco; Bilimbi; Borojó; Cajou, fruit; Cambucá; Carob; Cashew apple; Ciruela verde; Davidson's plum; Feijoa; Fig; gooseberry, Indian; guava; guava, cattley; guava, para; guava, purple strawberry; guava, strawberry; guava, yellow strawberry; Imbé; Imbu; Jaboticaba; Jujube, Indian; Kwai muk; Mangaba; Marian plum; Mombin, malayan; Mombin, purple; Monkeyfruit; Nance; Natal plum; Noni; papaya, mountain; persimmon, Japanese; Pomerac; Rambai; Rose apple; Sentul; starfruit; Surinam cherry; Tamarind; and Uvalha. Also included are cultivars, varieties and hybrids of these commodities.

iii. *Palm fruit, edible peel subgroup 23C.* (Representative commodity—Date). EPA is proposing nine commodities for new subgroup 23C: Açaí; Apak palm; Bacaba palm; Bacaba-de-leque; date; Doum palm coconut; Jelly palm; Patauá; and Peach palm, fruit. Also included are cultivars, varieties and hybrids of these commodities.

The creation of these subgroups and the choice of representative commodity designations are based on sorting commodities into fruit size, small versus medium to large fruit, based on the surface area to mass (volume) ratio, with the addition of a palm subgroup in order to determine the proposed subgrouping scheme. Small fruit were distinguished from medium and large fruit depending on whether the fruit's surface area to mass (volume) ratio was greater or less than 1.5:1. Palm commodities are proposed to be classified in a separate subgroup based on the botanical similarity of trees in the family *Arecaceae* (alt. *Palmae*). Palm fruit is produced in clusters that are partially exposed to the elements, and fruit is

located considerably higher on palm trees than other tropical and subtropical fruits; therefore, similar use patterns of pesticide applications are expected to occur and similar residue patterns can be expected within the palm group. EPA has determined that residue data on the designated representative crops will provide adequate information on residue levels in crops and subgroups.

E. Crop Group 24: Tropical and Subtropical Fruit, Inedible Peel Group

EPA is proposing to establish a new crop group entitled Tropical and Subtropical Fruit, Inedible Peel, Crop Group 24:

1. *Commodities.* EPA proposes to include the following 104 commodities in new Crop Group 24: Abiu, *Pouteria caimito* (Ruiz & Pav.) Radlk; Aisen, *Boscia senegalensis* (Pers.) Lam.; Akee apple, *Blighia sapida* K.D. Koenig; Atemoya, *Annona cherimola* Mill. X A. squamosa L.; avocado, *Persea americana* Mill.; avocado, Guatemalan, *Persea americana* Mill. var. *guatemalensis;* avocado, Mexican, *Persea americana* Mill. var. *drymifolia* (Schltdl. & Cham.) S. F. Blak; avocado, West Indian, *Persea americana* var. *americana;* Bacury, *Platonia insignis* Mart.; Bael fruit, *Aegle marmelos* (L.) Corrêa; banana, *Musa* spp. and hybrids; banana, dwarf, *Musa* hybrids; *Musa acuminata* Colla; Binjai, *Mangifera caesia* Jack; Biriba, *Annona mucosa* Jacq.; Breadfruit, *Artocarpus altilis* (Parkinson) Fosberg; Burmese grape, *Baccaurea ramiflora* Lour.; Canistel, *Pouteria campechiana* (Kunth) Baehni; Cat's-eyes, *Dimocarpus longan* Lour. subsp. *malesianus* Leenh.; Champedak, *Artocarpus integer* (Thunb.) Merr.; Cherimoya, *Annona cherimola* Mill.; Cupuacú, *Theobroma grandiflorum* (Willd. Ex Spreng.) K. Schum.; Custard apple, *Annona reticulata* L.; Dragon fruit, *Hylocereus undatus* (Haw.) Britton & Rose; Durian, *Durio zibethinus* L.; Elephant-apple, *Limonia acidissima* L.; Etambe, *Mangifera zeylanica* (Blume) Hook. F.; Granadilla, *Passiflora ligularis* Juss.; Granadilla, giant, *Passiflora quadrangularis* L.; Ilama, *Annona macroprophyllata* Donn. Sm.; Ingá, *Inga vera* Willd. subsp. *affinis* (DC.) T. D. Penn.; Jackfruit, *Artocarpus heterophyllus* Lam.; Jatobá, *Hymenaea courbaril* L.; Karuka, *Pandanus julianettii* Martelli; Kei apple, *Dovyalis caffra* (Hook. F. & Harv.) Warb.; Langsat, *Lansium domesticum* Corrêa; Lanjut, *Mangifera lagenifera* Griff.; Longan, *Dimocarpus longan* Lour.; Lucuma, *Pouteria lucuma* (Ruiz & Pav.) Kuntze; Lychee, *Litchi chinensis* Sonn.; Mabolo, *Diospyros blancoi* A. DC.; Madras-thorn, *Pithecellobium dulce* (Roxb.) Benth.; Mammy-apple, *Mammea americana* L.; Manduro, *Balanites maughamii* Sprague; mango, *Mangifera indica* L.; mango, horse, *Mangifera foetida* Lour.; mango, Saipan, *Mangifera odorata* Griff.; Mangosteen, *Garcinia mangostana* L.; Marang, *Artocarpus odoratissimus* Blanco; Marmaladebox, *Genipa americana* L.; Matisia, *Matisia cordata* Humb. & Bonpl.; Mesquite, *Prosopis juliflora* (Sw.) DC.; Mongongo, fruit, *Schinziophyton rautanenii* (Schinz) Radcl.-Sm; Monkey-bread-tree, *Adansonia digitata* L.; Monstera, *Monstera deliciosa* Liebm.; Nicobar-breadfruit, *Pandanus leram* Jones ex Fontana; Paho, *Mangifera altissima* Blanco; Pandanus, *Pandanus utilis* Bory; papaya, *Carica papaya* L.; passionflower, winged-stem, *Passiflora alata* Curtis; passionfruit, *Passiflora edulis* Sims; passionfruit, banana, *Passiflora tripartita* var. *mollissima* (Kunth) Holm-Niels. & P. Jorg.; passionfruit, purple, *Passiflora edulis* Sims forma *edulis;* passionfruit, yellow, *Passiflora edulis* Sims forma *flavicarpa* O. Deg.; Pawpaw, common, *Asimina triloba* (L.) Dunal; Pawpaw, small-flower, *Asimina parviflora* (Michx.) Dunal; Pelipisan, *Mangifera casturi* Kosterm.; Pequi, *Caryocar brasiliense* Cambess; Pequia, *Caryocar villosum* (Aubl.) Pers.; persimmon, American, *Diospyros virginiana* L.; pineapple, *Ananas comosus* (L.) Merr.; Pitahaya, *Hylocereus polyrhizus* (F. A. C. Weber) Britton & Rose; Pitaya, *Hylocereus* spp. including *H. megalanthus, H. ocamponis* and *H. polychizus;* Pitaya amarilla, *Hylocereus triangularis* Britton & Rose; Pitaya roja, *Hylocereus ocamponis* (Salm-Dyck) Britton & Rose; Pitaya, yellow, *Hylocereus megalanthus* (K. Schum. ex Vaupel) Ralf Bauer; plantain, *Musa paradisiaca* L.; pomegranate, *Punica granatum* L.; Poshte, *Annona liebmanniana* Baill.; Prickly pear, fruit, *Opuntia ficus-indica* (L.) Mill., *Opuntia* spp.; Prickly pear, Texas, fruit, *Opuntia engelmannii* Salm-Dyck ex Engelm. var. *lindheimeri* (Engelm.) B. D. Parfitt & Pinkava; Pulasan, *Nephelium ramboutan-ake* (Labill.) Leenh.; Quandong, *Santalum acuminatum* (R. Br.) DC.; Rambutan, *Nephelium lappaceum* L.; Saguaro, *Carnegiea gigantea* (Engelm.) Britton & Rose; Sapodilla, *Manilkara zapota* (L.) P. Royen; Sapote, black, *Diospyros digyna* Jacq.; Sapote, green, *Pouteria viridis* (Pittier) Cronquist; Sapote, mamey, *Pouteria sapota* (Jacq.) H.E. Moore & Stearn; Sapote, white, *Casimiroa edulis* La Llave & Lex; Sataw, *Parkia speciosa* Hassk.; Satinleaf, *Chrysophyllum oliviforme* L.; Screw-pine, *Pandanus tectorius* Parkinson; Sierra Leone-tamarind, *Dialium guineense* Willd.; Soncoya, *Annona purpurea* Moc. & Sessé ex Dunal; Soursop, *Annona muricata* L.; Spanish lime, *Melicoccus bijugatus* Jacq.; Star apple, *Chrysophyllum cainito* L.; Sugar apple, *Annona squamosa* L.; Sun Sapote, *Licania platypus* (Hemsl.) Fritsch; Tamarind-of-the-Indies, *Vangueria madagascariensis* J. F. Gmel.; Velvet Tamarind, *Dialium indum* L.; Wampi, *Clausena lansium* (Lour.) Skeels; White star apple, *Chrysophyllum albidum* G. Don; and Wild loquat, *Uapaca kirkiana* Müll. Arg. Also included are cultivars, varieties, and hybrids of these commodities.

2. *Representative commodities.* EPA proposes the following commodities as representatives for new Tropical and Subtropical Fruit, Inedible Peel, Crop Group 24: Atemoya or Sugar apple; avocado; pomegranate or banana; Dragon fruit; Prickly pear, fruit; lychee; passionfruit; and pineapple.

These representative commodities will account for approximately 99% of the harvested U.S. acres for the members of the new crop group. The selection of representative commodities is based on a representative commodity that is most likely to: Contain the highest residues (whether raw or processed); be major in terms of production and consumption; and be similar in morphology, growth habit, pest problems and edible portion, and subject to similar processing as the related commodities within a group or subgroup. Comparison of the tolerances established for the representative commodities support that residue levels will adequately cover the wide number of commodities.

3. *Crop subgroups.* EPA proposes five crop subgroups for new Tropical and Subtropical Fruit, Inedible Peel, Crop Group 24:

i. *Small fruit, inedible peel subgroup 24A.* (Representative commodity—Lychee). EPA is proposing 18 commodities in new subgroup 24A: Aisen; Bael fruit; Burmese grape; Cat's eyes; Ingá; lychee; Madras-thorn; Manduro; Matisia; Mesquite; Mongongo, fruit; Pawpaw, small-flower; Satinleaf; Sierra Leone-tamarind; Spanish lime; Velvet tamarind; Wampi; and White star apple. Also included are cultivars, varieties and hybrids of these commodities.

ii. *Medium to large fruit, smooth, inedible peel subgroup 24B.* (Representative commodities—Avocado, plus Pomegranate or Banana). EPA is proposing 42 commodities for new subgroup 24B: Abiu; Akee apple; avocado; avocado, Guatemalan; avocado, Mexican; avocado, West

Indian; Bacury; banana; banana, dwarf; Binjai; Canistel; Cupuacú; Etambe; Jatobá; Kei apple; Langstat; Lanjut; Lucuma; Mabolo; mango; mango, horse; mango, Saipan; Mangosteen; Paho; papaya; Pawpaw, common; Pelipisan; Pequi; Pequia; persimmon, American; plantain; pomegranate; Poshte; Quandong; Sapote, black; Sapote, green; Sapote, white; Sataw; Screw-pine; Star apple; Tamarind-of-the-Indies; and Wild loquat. Also included are cultivars, varieties and hybrids of these commodities.

iii. *Medium to large fruit, rough or hairy, inedible peel subgroup 24C.* (Representative commodities—Pineapple, plus Atemoya or Sugar apple). EPA is proposing 27 commodities for new subgroup 24C: Atemoya; Biriba; breadfruit; Champedak; Cherimoya; Custard apple; Durian; Elephant-apple; Ilama; Jackfruit; Karuka; longan; Mammy-apple; Marmalade-box; Marang; Monkey-bread tree; Nicobar-breadfruit; Pandanus; pineapple; Pulasan; Rambutan; Sapodilla; Sapote, mamey; Soncoya; Soursop; Sugar apple; and Sun sapote. Also included are cultivars, varieties and hybrids of these commodities.

iv. *Cactus inedible peel subgroup 24D.* (Representative commodities—Dragon fruit and Prickly pear fruit). EPA is proposing nine commodities for new subgroup 24D: Dragon fruit; Pitahaya; Pitaya; Pitaya amarilla; Pitaya roja; Pitaya, yellow; Prickly pear, fruit; Texas prickly pear, fruit; and Saguaro. Also included are cultivars, varieties and hybrids of these commodities.

v. *Vine inedible peel subgroup 24E.* (Representative commodity—Passionfruit). EPA is proposing eight commodities for new subgroup 24E: Granadilla; Granadilla, giant; Monstera; passionflower, winged-stem; passionfruit; passionfruit, banana; passionfruit, purple; and passionfruit, yellow. Also included are cultivars, varieties and hybrids of these commodities.

The creation of these subgroups and the choice of representative commodity designations are based on similarities between cultural practices, potential residue exposure due to fruit size area, and lack of animal feed items. The proposed subgroup designations are based on fruit size (small versus medium to large fruit), determined via the surface area to mass (volume) ratio, as well as peel texture (rough or hairy, smooth, or cactus), and growth habit (e.g., vine crops).

F. Other Changes

1. *Revise § 180.40(e) and (f).* EPA believes that § 180.40(f) of the Crop Group Regulations, promulgated in 1983 (Ref. 2), has become outdated and that revisions are needed. Section 180.40(f) addresses the interaction of crop group tolerances with processed food tolerances and meat, milk, and egg tolerances. Under FFDCA section 408, raw food tolerances and exemptions from tolerance apply to processed foods as well; however, separate processed food tolerances are needed if residues may concentrate to levels higher than the raw food tolerance in one or more fractions of the raw food following processing. (21 U.S.C. 346a(a)(2)). This provision in the FFDCA is generally referred to as the flow-through provision because it legally permits residues—or, more accurately, the raw food tolerance—to flow through to processed food. Similarly, residues in a raw crop may make necessary a tolerance in meat, milk, and egg commodities if the crop, or a fraction thereof, is a significant animal feed commodity and the consumption of the treated crop may lead to residues in livestock commodities. (§ 180.3(b)). Section 180.40(f) requires that, if any commodity covered by a crop group is utilized as an animal feed, any needed tolerances or exemptions from tolerance in meat, milk, or egg commodities must be established before the crop group tolerance will be promulgated. Section 180.40(f) also specifies that:

- Representative crops in a crop group include all crops that upon processing may result in a greater concentration of residues in the processed food;
- Processing data will be required before establishing a crop group tolerance; and
- Crop group tolerances will not be established on processed foods prepared from crops covered by crop group tolerances.

When § 180.40(f) was proposed, one commenter criticized it as subject to misinterpretation. The commenter noted that crop groups do not include all crops that are processed as representative commodities and thus the provision may be construed as a ''guide for crops for which food or feed additive data will be required.'' (Ref. 2). Another commenter asked EPA to reconsider the exclusion on crop group tolerances for processed foods. In response to the first commenter, EPA disagreed that the provision would be misconstrued as limiting processing data requirements to representative commodities. While not disputing that crop groups do not include all commodities subject to processing as representative commodities, the Agency thought the provision did not suggest that processing data was not required on all commodities that are processed. EPA cited the bar on setting group tolerances on processed foods as the basis for this conclusion. Nonetheless, the Agency did note that representative commodities are intended to be representative of ''the overall residue picture for the group,'' including residues in processed foods. As to the second comment, EPA declined to remove the bar on establishing crop group tolerances for processed foods. EPA concluded that, given the relatively low number of processed food tolerances established each year and the potentially significant differences in processing techniques even for commodities in the same crop group, it would not be appropriate to set processed food group tolerances. However, EPA promised to re-examine this exclusion in the future (Ref. 2).

EPA has now re-examined the requirements of § 180.40(f) in light of 30 years of experience in implementing the 1983 crop groups rule, evaluating residue levels in processed foods; and setting processed food tolerances. Based on this re-examination, EPA has concluded that § 180.40(f) is no longer consistent with Agency practice and fails to provide clear direction to tolerance petitioners.

With regard to consistency with Agency practice, § 180.40(f) is out-of-step with Agency determinations made on what commodities are appropriately considered representative and on whether processed food group tolerances should be set. As noted, § 180.40(f) specifies that ''representative crops include all crops in the group that could be processed such that residues may concentrate in processed food and/or feed.'' The thinking behind this provision appears to have been that processed food and animal feeds were so unique that residue data on them was needed in all cases to evaluate human exposure to a pesticide under a group tolerance and to determine whether processed food and feed tolerances are needed. In practice, EPA has not found this to be the case. For example, nearly every crop in the Crop Group 15—Cereal Grains is processed into fractions that could result in concentrated residues but EPA only selected a handful of the crops to serve as representative crops. Designating every, or nearly every, crop in a crop group as a representative commodity would have defeated the purpose of having a crop group. The selection of only a few of the cereal grains that are processed as representative crops was based on an analysis on the representativeness of these crops as to both raw and

processed commodities. EPA has determined that, as to the commodities in this group, processing data on only a few commodities would be adequate for estimating residue values in all processed foods covered by the crop group tolerance (under FFDCA section 408, raw food tolerances apply to all processed food, including animal feed, derived from that raw food) (Ref. 3). (See 21 U.S.C. 346a(a)(2))

EPA's experience implementing the crop group regulations has also led EPA to question the wisdom of § 180.40(f)'s bar on crop group tolerances for ''processed foods prepared from crops covered by [a] group tolerance.'' If, as found for the cereal grains group and other more recently established crop groups, processing data on a few commodities are adequate to assess residue levels in processed food and animal feed covered by the crop group tolerance, there is no reason not to consider setting a crop group tolerance for processed food or animal feed, where needed. In fact, outside of the context of the crop group regulations in §§ 180.40 and 180.41, EPA has been setting de facto crop group tolerances for processed foods pursuant to its Residue Chemistry Test Guidelines (Ref. 4) for years. For example, those Guidelines identify the commodity ''citrus'' as appropriate for use in setting both raw and processed food/feed tolerances. Although this term is not necessarily co-extensive with Crop Group 10–10, Citrus Fruit Group, it does indicate EPA's judgment that processed food/feed tolerances are workable for categories of commodities and not just single commodities.

Additionally, EPA's conclusions in 1983 regarding the relative rarity of the need for processed food tolerances and the uniqueness of food processing techniques have not stood the test of time. Although the number of processed food tolerances is small compared to the number of raw food tolerances, the overall number of processed food tolerances is significant. For example, there are over 250 processed food tolerances established for the processed commodities of just four crops: Almond (hulls); apple (wet and dry pomace and juice); sugar beet (dried pulp, molasses, and refined sugar); and wheat (bran, germ, flour, middlings, milled byproducts, and shorts). Further, EPA's conclusion about the uniqueness of processing techniques has not been borne out by the thousands of processing studies received by EPA. EPA's method of estimating pesticide levels in processed foods is conservative because EPA bases its estimate on the highest residue value found in field trials designed to produce worst-case residue levels. Data from the USDA's Pesticide Data Program (PDP) confirms the conservativeness of EPA's approach. PDP data show that residues in processed foods are usually one to two orders of magnitude below the level estimated by EPA in its exposure assessment and tolerance selection processes.

EPA has not only found § 180.40(f) to be out-of-step with Agency practice, but upon further reflection based upon years of experience, EPA now believes there is substantial merit in the comments made 30 years ago questioning the regulation's clarity. Other than the bar on processed food group tolerances, EPA believes that § 180.40(f) meant to establish three principles. First, the provision was intended to incorporate in the crop group regulations EPA's long-held policy (generally referred to as the ''coordination policy'') of not setting tolerances on raw agricultural commodities unless any needed tolerances on processed foods (including animal feeds) and on meat, milk, and/or eggs are in place (or are being simultaneously established) (Ref. 2, p. 29856). Otherwise, raw foods containing legal residues might result, after processing for human or animal consumption or after consumption by livestock, in adulterated commodities subject to seizure.

Second, the provision was intended to indicate that representative commodities would be chosen for crop groups with an eye toward the issue of residue levels in processed foods and in meat, milk, and eggs resulting from animals consuming treated food so that the representative crops would be truly representative of the group. Third, the provision was intended to explain that processing studies and animal feeding studies, where appropriate, would be required on the representative commodities. Unless such studies were submitted when needed, EPA believed it could not determine overall exposure levels resulting from a crop group tolerance and if a crop group tolerance would inadvertently lead to processed food or animal feed that has over tolerance residues. Little of this, however, plainly emerges from the text of § 180.40(f).

Based on this re-examination of § 180.40(f), EPA has concluded that several changes are needed. EPA is proposing to revise § 180.40(f) to more clearly enunciate the three principles originally included in the provision and to update these provisions in line with current practice. For the sake of clarity, the proposed revisions include dividing § 180.40(f) into four paragraphs. In proposed § 180.40(f)(1), EPA is proposing to adopt a statement of its coordination policy similar to that in EPA's Federal Insecticide, Fungicide, and Rodenticide Act (FIFRA) regulations that bars the granting of a FIFRA registration until all needed tolerances have received Agency approval. (See 40 CFR 152.112(g)) EPA is proposing that crop group tolerances not be established until all other ''necessary'' tolerances have been approved (or are being simultaneously established). Generally, the establishment of a tolerance for one raw commodity makes other tolerances ''necessary'' if normal processing, handling, production, transportation, or storage of the treated commodity, or consumption of the commodity by livestock, could lead to the presence of a residue in another commodity not covered by a tolerance or exemption. Proposed § 180.40(f)(1) specifies that tolerances in other food forms are considered necessary if:

- A processed form or fraction of a raw food covered by the crop group tolerance may contain residues due to processing that are higher than the crop group tolerance;
- There exist raw commodities derived or produced from commodity covered by the crop group tolerance but the derived raw food is not covered by the crop group tolerance; and
- Commodities, or fractions thereof, that are covered by the crop group tolerance are a significant animal feed item and consumption of the feed item may lead to residues in meat, milk, or eggs.

The reason for the second criteria is that the production of food may result in multiple discrete raw and processed commodities as a crop moves from harvest to market, but the flow-through provision only applies to processed foods. Raw foods that are discrete from the raw commodity specified in the tolerance need a separate tolerance if they contain any residue level (i.e., they are not covered by the flow-through provision). Separate raw forms of the same crop can be created, for example, by drying the crop because not all forms of drying are considered to be ''processing,'' as that term is used in the FFDCA (Ref. 5). Proposed § 180.40(f)(1) carves out an exception to the first two types of necessary tolerances where there is complete separation between crops grown solely to be sold as a specific raw commodity and crops grown for the purpose of producing a processed food or a separate raw commodity. In these circumstances, no processed food tolerance (or separate

raw commodity tolerance) is needed to set the raw food tolerance because production of the commodity for the raw food market will not result in the production of processed foods (or distinct raw commodities).

In new § 180.40(f)(2) EPA is proposing to add express authority to set processed food group tolerances for processed foods, or fractions of foods, produced from foods covered by the crop groups established in § 180.41. Thus, EPA is proposing to delete the language barring the establishment of crop group tolerances for processed foods as currently exists in § 180.40(f). Such processed commodity group tolerances would apply to the types of processed commodities, including both food and feed products, as to which EPA has traditionally set processed food tolerances (e.g., juice, oil, and dried pulp of citrus commodities). Thus, going forward, EPA will be able to replace multiple individual processed commodity tolerances with a single crop group processed commodity tolerance. For example, a crop group tolerance on ''Grain, cereal, group 15, bran'' would apply to bran from each of the 14 commodities in Crop Group 15.

In new § 180.40(f)(2) EPA is also proposing to set crop group tolerances for discrete raw commodities produced from commodities covered by the crop groups in § 180.41 where these discrete raw commodities are not covered by the crop group. An example of such a discrete ''produced'' raw food is aspirated grain fractions that are produced during the storage of grain but is neither the raw agricultural commodity ''grain'' nor a processed food. Once final, EPA would be authorized to set, for example, a crop group tolerance for ''Grain, cereal, group 15, aspirated grain fractions.'' Further, § 180.40(f)(2) integrates processed food (and ''produced'' raw commodities) group tolerances into § 180.40 more generally by specifying that these group tolerances are to be governed by several of the provisions in § 180.40 pertaining to raw agricultural commodity crop groups:

- § 180.40(c)—allowing crop group tolerances to be established where tolerances already exist on the representative commodities;
- § 180.40(d)—establishing the representative commodities as the minimum residue chemistry data base;
- § 180.40(e)—requiring that registered patterns of pesticide use be similar for all crops in the group;
- § 180.40(g)—specifying the maximum variation in residue values in representative crops generally permitted for establishing a crop group; and
- § 180.40(h)—providing an alternative for excluding a commodity from a crop group.

Because of these proposed revisions, EPA is also proposing to revise § 180.40(e) to make clear that crop groups may only be established where both the pesticide use patterns in the production of the crops and the food processing steps are similar.

In new § 180.40(f)(3) EPA is proposing to restate EPA's concept of representative commodities to incorporate its revised view that a representative commodity can represent both raw and processed foods covered by the crop group tolerance as well as residues that may result in meat, milk, or eggs from use of covered crops, or fractions thereof, as animal feed.

Finally, in new § 180.40(f)(4) EPA is also proposing to make clear that processing data, data on residues in raw commodities derived or produced from the commodity in the crop group, and animal feeding studies will be required, where appropriate. Processing data are generally required if a raw commodity is processed and residues may concentrate in one or more of the processed fractions. EPA expects that processing data on the representative commodities will generally be sufficient for establishing processed commodity group tolerances but, as with raw agricultural commodity crop groups, may require additional processing data where circumstances warrant. Animal studies are required if the raw commodity or any of its processed fractions are a significant animal feed commodity.

2. *Revise Crop Groups 16, 17, and 18 to clarify that separate group tolerances may be set on forage, fodder, straw, and hay.* Crop groups 16, 17, and 18 cover animal feeds (forage, fodder, straw, and/or hay) for various grains, grasses, and non-grass/non-grain crops. EPA's experience in administering these crop groups has shown that, for some pesticides, there may be significant differences between residue levels of forage, fodder, stover, straw, and/or hay for the covered crops even though the residue levels in each of these animal feeds are similar for the various crops covered. For example, with Crop Group 16, residue levels in forage and fodder of corn and wheat may be very different than residue levels in straw of corn and wheat despite a similarity between residue levels in corn and wheat for each of the these animal feed commodities individually (i.e., residue levels in forage of corn and wheat are similar, residue levels in fodder of corn and wheat are similar, etc.). In these circumstances, EPA believes that enforcement can be more efficient and dietary exposure assessments more precise if separate group tolerances can be set on the animal feeds covered by the group tolerance. Accordingly, EPA is proposing to amend each of these crop groups to make clear that separate crop groups can be set for one or more of the animal feeds in the group if there are differences between the residue levels in the animal feed commodities but residue levels are similar for the individual commodities across the covered crops.

3. *Revise broccoli commodity definition.* EPA proposes to revise the commodity definition for broccoli in § 180.1(g) to correct the spelling for gai lon, which is currently written as ''gia lon.''

4. *Revise sugar apple commodity definition.* EPA proposes to revise the commodity definition for sugar apple in § 180.1(g) to update the scientific name for sugar apple as well as to remove the remove sweetsop and anon from the definition.

IV. References

The following is a listing of the documents that are specifically referenced in this document. The docket includes these documents and other information considered by EPA, including documents that are referenced within the documents that are included in the docket, even if the referenced document is not physically located in the docket. For assistance in locating these other documents, please consult the person listed under **FOR FURTHER INFORMATION CONTACT**.

1. EPA. Pesticide Tolerance Crop Grouping Program; Proposed Expansion; Proposed Rule. **Federal Register** (77 FR 28920, May 23, 2007) (FRL–8126–1).

2. EPA. Crop Grouping: Amendment to Tests on the Amount of Residue Remaining in Minor Crops; Final Rule. **Federal Register** (48 FR 29855, June 29, 1983).

3. EPA. Bernard A. Schneider. Selection of Representative Commodities and Processed Commodities. July 24, 2014. Docket ID number EPA–HQ–OPP–2006–0766.

4. EPA. Residue Chemistry Test Guidelines. OPPTS 860.1520, Processed Food/Feed. August 1996.

5. EPA. Pesticides; Status of Dried Commodities as Raw Agricultural Commodities; Notice. **Federal Register** (61 FR 2386, January 25, 1996) (FRL–4992–4).

6. EPA. Pesticide Tolerance Crop Grouping Program; Proposed Expansion; Proposed Rule. **Federal Register** (77 FR 28920, May 23, 2007) (FRL–8126–1).

7. EPA. Pesticide Tolerance Crop Grouping Program; Final Rule. **Federal Register** (72 FR 69150, December 7, 2007) (FRL–8343–1).

V. Statutory and Executive Order Reviews

A. Executive Order 12866: Regulatory Planning and Review and Executive Order 13563: Improving Regulation and Regulatory Review

This action is not a ''significant regulatory action'' under the terms of Executive Order 12866 (58 FR 51735, October 4, 1993) and is therefore not subject to review under Executive Orders 12866 and 13563 (76 FR 3821, January 21, 2011).

EPA prepared an analysis of the potential costs and benefits associated with this action in the first proposed rule of this series of updates (Ref. 6). This analysis is contained in ''Economic Analysis Proposed Expansion of Crop Grouping Program.'' A copy of the analysis is available in the docket. Because the costs and benefits of each update to the crop grouping rule are essentially the same, EPA believes the May 23, 2007 economic analysis continues to be applicable here and is summarizing it in this unit.

This is a burden-reducing regulation. Crop grouping has saved money by permitting the results of pesticide exposure studies for one crop to be applied to other, similar crops. This regulation would expand certain existing crop groups and add new crop groups.

The primary beneficiaries of the regulation are minor crop producers and consumers. Specialty crop producers will benefit because lower registration costs will encourage manufacturers to register more pesticides on minor crops, providing these growers with additional pesticide options. The greater availability of pesticides for use in the United States as well as increased coverage of tolerances to imported commodities may result in a larger supply of imported and domestically produced specialty produce at potentially lower costs benefiting consumers. Secondary beneficiaries are pesticide registrants, who benefit because expanded markets for pesticides will lead to increased sales. IR–4 and EPA, which are publicly funded Federal Government entities, will more efficiently use resources as a result of the rule.

EPA will conserve resources if, as expected, new or expanded crop groups result in fewer emergency pesticide use requests from specialty crop growers. Further, new and expanded crop groups will likely reduce the number of separate risk assessments and tolerance rulemakings that EPA will have to conduct. The public will further benefit from the increased international harmonization of crop classification and nomenclature, harmonized commodity import and export standards, and increased potential for resource sharing between EPA and other pesticide regulatory agencies. Revisions to the crop grouping program will result in no appreciable costs or negative impacts to consumers, specialty crop producers, and pesticide registrants.

The benefits of this action can be shown through the example of the impact of changes to Crop Group 3 in a prior rulemaking (Ref. 7). That rulemaking established Bulb Vegetable Crop Group 3–07, which expanded upon the related Crop Group 3, Bulb Vegetables from 7 to 25 crops, an increase of 18 from the original crop group. Prior to the establishment of the expanded crop group, adding tolerances for the 18 crops would have required a minimum of 18 field trials at a cost of approximately $5.4 million (assuming $300,000 per field trial). However, after promulgation of the new group, these 18 new crops could obtain pesticide tolerances under a Crop Group 3–07 tolerance with no field trials in addition to those required on the representative commodities (which did not change with the expansion of the group). Fewer field trials mean a greater likelihood that these commodities will obtain tolerance coverage under the FFDCA, aiding growers and reducing the costs of both the IR–4 data development process and the EPA review process, all while maintaining the protectiveness of the tolerance regulatory scheme.

B. Paperwork Reduction Act (PRA)

This action does not impose any new information collection requirements that would require additional review or approval by OMB under the provisions of PRA, 44 U.S.C. 3501 *et seq.* However, this action is expected to reduce mandatory paperwork due to a reduction in required studies. This action will also have the effect of reducing the number of residue chemistry studies because fewer representative crops would need to be tested under a crop grouping scheme, than it would otherwise be required.

C. Regulatory Flexibility Act (RFA)

Pursuant to RFA section 605(b), 5 U.S.C. 601 *et seq.,* I hereby certify that this proposed rule will not have a significant adverse economic impact on a substantial number of small entities. This proposed rule does not have any direct adverse impacts on small businesses, small non-profit organizations, or small local governments.

For the purpose of assessing the impacts of this proposed rule on small entities, a small entity is defined as:

1. A small business as defined by the Small Business Administration's (SBA) regulations at 13 CFR 121.201.
2. A small governmental jurisdiction that is a government of a city, county, town, school district or special district with a population of less than 50,000.
3. A small organization that is any not-for-profit enterprise which is independently owned and operated and is not dominant in its field.

In determining whether a rule has a significant economic impact on a substantial number of small entities, the impact of concern is any significant adverse economic impact on small entities, since the primary purpose of the regulatory flexibility analyses is to identify and address regulatory alternatives ''which minimize any significant economic impact of the proposed rule on small entities'' (5 U.S.C. 603 and 604). Thus, an agency may certify that a rule will not have a significant economic impact on a substantial number of small entities if the rule relieves regulatory burden or otherwise has a positive economic effect on all of the small entities subject to the rule.

This proposed action provides regulatory relief and regulatory flexibility. The new crop groups ease the process for pesticide manufacturers to obtain pesticide tolerances on greater numbers of crops. Pesticides will be more widely available to growers for use on crops, particularly specialty crops. This proposed action is not expected to have any adverse impact on small businesses.

D. Unfunded Mandates Reform Act (UMRA)

EPA has determined that this action does not contain a Federal mandate that may result in expenditures of $100 million or more for State, local, and tribal governments, in the aggregate, or the private sector in any 1 year. Accordingly, this action is not subject to the requirements of UMRA sections 202, 203, 204, and 205, 2 U.S.C. 1501 *et seq.*

E. Executive Order 13132: Federalism

Pursuant to Executive Order 13132, 64 FR 43255, August 10, 1999, EPA has determined that this action does not have federalism implications, because it will not have substantial direct effects on the States, on the relationship between the national government and

the States, or on the distribution of power and responsibilities among the various levels of government, as specified in the Executive Order. Thus, Executive Order 13132 does not apply to this action.

F. Executive Order 13175: Consultation and Coordination With Indian Tribal Governments

As required by Executive Order 13175, 65 FR 67249, November 9, 2000, EPA has determined that this action does not have tribal implications because it will not have any effect on tribal governments, on the relationship between the Federal Government and the Indian tribes, or on the distribution of power and responsibilities between the Federal Government and Indian tribes, as specified in the Executive order. Thus, Executive Order 13175 does not apply to this action.

G. Executive Order 13045: Protection of Children From Environmental Health Risks and Safety Risks

Executive Order 13045, 62 FR 19885, April 23, 1997 does not apply because this action is not designated as an economically significant regulatory action as defined by Executive Order 12866 (see Unit V.A.), nor does it establish an environmental standard, or otherwise have a disproportionate effect on children.

H. Executive Order 13211: Actions That Significantly Affect Energy Supply, Distribution, or Use

This action is not a ''significant energy action'' as defined in Executive Order 13211, 66 FR 28355, May 22, 2001 because it is not designated as an regulatory action as defined by Executive Order 12866 (see Unit V.A.), nor is it likely to have any adverse effect on the supply, distribution, or use of energy.

I. National Technology Transfer and Advancement Act (NTTAA)

Section 12(d) of NTTAA, 15 U.S.C. 272 note, directs EPA to use voluntary consensus standards in its regulatory activities unless to do so would be inconsistent with applicable law or impractical. Voluntary consensus standards are technical standards (e.g., materials specifications, test methods, and sampling procedures) that are developed or adopted by voluntary consensus standards bodies. This action does not impose any technical standards that would require EPA to consider the use of any voluntary consensus standards.

J. Executive Order 12898: Federal Actions To Address Environmental Justice in Minority Populations and Low-Income Populations

This action does not have an adverse impact on the environmental and health conditions in low-income and minority communities. Therefore, this action does not involve special consideration of environmental justice related issues as specified in Executive Order 12898, 59 FR 7629, February 16, 1994.

List of Subjects in 40 CFR Part 180

Environmental protection, Administrative practice and procedure, Commodities, Pesticides and pests.

Dated: November 3, 2014.

James Jones,

Assistant Administrator, Office of Chemical Safety and Pollution Prevention.

Therefore, it is proposed that 40 CFR chapter I be amended as follows:

PART 180—[AMENDED]

■ 1. The authority citation for part 180 continues to read as follows:

Authority: 21 U.S.C. 321(q), 346a and 371.

■ 2. In § 180.1:

■ a. Revise the entries for ''Broccoli'' and ''Sugar apple'' in the table in paragraph (g).

■ b. Add entries for ''Fern, edible'' and ''Palm hearts'' in alphabetical order to the table in paragraph (g).

The revisions and additions read as follows:

§ 180.1 Definitions and interpretations.

* * * * *

(g) * * *

A	B
*	*
Broccoli	Broccoli, Chinese broccoli (gai lon, white flowering broccoli).
*	*
Fern, edible	Fern, edible, fiddlehead including: Black lady fern, *Deparia japonica* (Thunb.) M. Kato; Bracken fern, *Pteridium aquilinum* (L.) Kuhn; Broad buckler fern, *Dryopteris dilatata* (Hoffm.) A. Gray; Cinnamon fern, *Osmundastrum cinnamomeum* (L.) C. Presl; Lady fern, *Athyrium filix-femina* (L.) Roth ex Mert.; Leather fern, *Acrostichum aureum* L.; Mother fern, *Diplazium proliferum* (Lam.) Thouars; Ostrich fern, *Matteuccia struthiopteris* (L.) Tod.; Vegetable fern, *Diplazium esculentum* (Retz.) Sw.; Zenmai fern, *Osmuda japonica* Thunb.
*	*
Palm hearts	Palm hearts, various species including: African fan palm, *Borassus aethiopum* Mart.; Cabbage palm, *Euterpe oleracea* Mart.; Cabbage palmetto, *Sabal palmetto* (Walter) Schult. & Schult. f.; Coconut, *Cocos nucifera* L.; Palmyra palm, *Borassus flabellifera* L.; Peach Palm, *Bactris gasipaes* Kunth; Royal palm, *Roystonea oleracea* (Jacq.) O.F. Cook; Salak palm, *Salacca zalacca* (Gaertn.) Voss; Saw palmetto, *Serenoa repens* (W. Bartram) Small; Wine palm, *Raphia* spp.
*	*
Sugar apple	*Annona squamosa* L. and its hybrid atemoya (*Annona cherimola* Mill X A. s*quamosa* L.) Also includes true custard apple (*Annona reticulata* L.).
*	*

* * * * *

■ 3. In § 180.40, revise paragraphs (e) and (f) to read as follows:

§ 180.40 Tolerances for crop groups.

* * * * *

(e) Since a group tolerance reflects maximum residues likely to occur on all individual crops within a group, the proposed or registered patterns of use for all crops in the group or subgroup must be similar before a group tolerance is established. The pattern of use consists of the amount of pesticide applied, the number of times applied, the timing of the first application, the interval between applications, and the interval between the last application

and harvest. The pattern of use will also include the type of application; for example, soil or foliar application, or application by ground or aerial equipment. Additionally, since a group tolerance reflects maximum residues likely to occur on all individual foods within a group, food processing practices must be similar for all crops in the group or subgroup if the processing practice has the potential to result in residues in a processed commodity at a higher concentration than the raw agricultural commodity.

(f)(1) *General.* EPA will not establish a crop group for a pesticide unless all tolerances made necessary by the presence of pesticide residues in the crop group commodities have been issued or are being issued simultaneously with the crop group tolerance. For purposes of this paragraph (f)(1):

(i) Necessary tolerances for residues resulting from crop group tolerances include:

(A) Tolerances for processed food, including processed animal feed, to the extent needed under 21 U.S.C. 346a(a)(2).

(B) Tolerances for raw commodities not covered by the crop group tolerance that are derivative of commodities in the group.

(C) Tolerances for meat, milk, or egg products that may contain residues as a result of livestock's consumption of animal feed containing pesticide residues to the extent needed under § 180.6(b).

(ii) Notwithstanding the foregoing, a tolerance is not considered necessary for processed food, derivative raw commodities, or meat, milk, and eggs if the precursor raw commodities are grown solely for sale as a raw commodities and are completely segregated from commodities grown for the purpose of producing processed foods, derivative raw commodities, and commodities, or fractions thereof, that are used as animal feed.

(2) *Processed commodity and related raw commodity crop group tolerances.* EPA may establish crop group tolerances for processed commodities or fractions of commodities (e.g., bran and flour from the Cereal Grains Group), including processed fractions used as animal feed (e.g., pomace from the Pome Fruit Group), produced from crops in the crop groups in § 180.41. EPA may establish crop group tolerances for raw commodities or fractions of commodities, including fractions used as animal feed, derived from commodities covered by the crop groups in § 180.41 (e.g., aspirated grain dust associated with the Cereal Grains Group). Crop group tolerances on processed foods and derivative raw commodities may be based on data on representative commodities for associated crop group. Paragraphs (c), (d), (e), (g), and (h) of this section apply to group tolerances authorized by this paragraph (f)(2).

(3) *Representative crops.* Unless indicated otherwise in §§ 180.40 and 180.41, the processed food and feed forms of the representative crops for a crop group are considered to be representative of the processed food and feed forms and any derivative raw commodities not covered by the crop group, that are produced from any of the raw agricultural commodities covered by the crop group tolerance. Additionally, unless indicated otherwise in §§ 180.40 and 180.41, representative commodities for such crop groups are selected taking into consideration whether their use as animal feed will result in residues in or on meat, milk, and/or eggs at a level representative of the residues that would result from use of the other commodities or byproducts in the crop group as an animal feed.

(4) *Data.* Processing data on representative crops are required prior to establishment of a group tolerance if the processing of the representative commodity has the potential to result in residues in a processed commodity at a higher concentration than in the representative commodity. Residue data are required on raw commodities derived from the crops in the crop group tolerance but not directly covered by the tolerance. Animal feeding studies with a representative crop are required if the representative crop is used as a significant animal feed.

* * * * *

■ 4. In § 180.41:

■ a. Revise paragraph (b).

■ b. Redesignate paragraphs (c)(6) through (28) as paragraphs (c)(7) through (29), respectively.

■ c. Add a new paragraph (c)(6).

■ d. Redesignate newly redesignated paragraphs (c)(8) through (29) as paragraphs (c)(9) through (30), respectively.

■ e. Add a new paragraph (c)(8).

■ f. Revise newly redesignated paragraphs (c)(25)(ii), (c)(26)(ii), and (c)(27)(ii) introductory text.

■ g. Add paragraphs (c)(31), (32), and (33).

The revisions and additions read as follows:

§ 180.41 Crop group tables.

* * * * *

(b) Commodities not listed are not considered as included in the groups for the purposes of this paragraph (b), and individual tolerances must be established. Miscellaneous commodities intentionally not included in any group include globe artichoke, hops, peanut, and water chestnut.

(c) * * *

(6) *Crop Group 4–14.* Leafy Vegetable Group.

(i) *Representative commodities.* Head lettuce, leaf lettuce, mustard greens, and spinach.

(ii) *Commodities.* The following Table 1 lists all commodities included in Crop Group 4–14.

TABLE 1—CROP GROUP 4–14: LEAFY VEGETABLE

Commodities	Related crop subgroup
Amaranth, Chinese (*Amaranthus tricolor* L.)	4–14A
Amaranth, leafy (*Amaranthus* spp.)	4–14A
Arugula (*Eruca sativa* Mill.)	4–14B
Aster, Indian (*Kalimeris indica* (L.) Sch. Bip.)	4–14A
Blackjack (*Bidens pilosa* L.)	4–14A
Broccoli, Chinese (*Brassica oleracea* var. *alboglabra* (L.H. Bailey) Musil)	4–14B
Broccoli raab (*Brassica ruvo* L.H. Bailey)	4–14B
Cabbage, abyssinian (*Brassica carinata* A. Braun)	4–14B
Cabbage, seakale (*Brassica oleracea* L. var. *costata* DC.)	4–14B
Cat's whiskers (*Cleome gynandra* L.)	4–14A
Cham-chwi (*Doellingeria scabra* (Thunb.) Nees)	4–14A
Cham-na-mul (*Pimpinella calycina* Maxim)	4–14A
Chervil, fresh leaves (*Anthriscus cerefolium* (L.) Hoffm.)	4–14A

TABLE 1—CROP GROUP 4–14: LEAFY VEGETABLE—Continued

Commodities	Related crop subgroup
Chinese cabbage, bok choy (*Brassica rapa* subsp. *chinensis* (L.) Hanelt)	4–14B
Chipilin (*Crotalaria longirostrata* Hook & Arn)	4–14A
Chrysanthemum, garland (*Glebionis coronaria* (L.) Cass. ex Spach. *Glebionis* spp.)	4–14A
Cilantro, fresh leaves (*Coriandrum sativum* L.)	4–14A
Collards (*Brassica oleracea* var. *Viridis* L.)	4–14B
Corn salad (*Valerianella* spp.)	4–14A
Cosmos (*Cosmos caudatus* Kunth)	4–14A
Cress, garden (*Lepidium sativum* L.)	4–14B
Cress, upland (*Barbarea vulgaris* W. T. Aiton)	4–14B
Dandelion (*Taraxacum officinale* F.H. Wigg. Aggr.)	4–14A
Dang-gwi (*Angelica gigas)*	4–14A
Dillweed (*Anethum graveolens* L.)	4–14A
Dock (*Rumex patientia* L.)	4–14A
Dol-nam-mul (*Sedum sarmentosum* Bunge)	4–14A
Ebolo (*Crassocephalum crepidioides* (Benth.) S. Moore)	4–14A
Endive (*Cichorium endivia* L. ssp. *Endivia*)	4–14A
Escarole (*Cichorium endivia* L. ssp. *Endivia*)	4–14A
Fameflower (*Talinum fruticosum* (L.) Juss.)	4–14A
Feather cockscomb (*Glinus oppositifolius* (L.) Aug. DC.)	4–14A
Good King Henry (*Chenopodium bonus-henricus* L.)	4–14A
Hanover salad (*Brassica napus* var. *Pabularia* (DC.) Rchb.)	4–14B
Huauzontle (*Chenopodium berlandieri* Moq.)	4–14A
Jute, leaves (*Corchorus spp.*)	4–14A
Kale (*Brassica oleracea* var. *Sabellica* L.)	4–14B
Lettuce, bitter (*Launaea cornuta* (Hochst. ex Oliv. & Hiern) C. Jeffrey)	4–14A
Lettuce, head (*Lactuca sativa* L.; including *Lactuca sativa* var. *capitata* L.)	4–14A
Lettuce, leaf (*Lactuca sativa* L.; including *Lactuca sativa* var. *longifolia* Lam.; *Lactuca sativa* var. *crispa* L.)	4–14A
Maca (*Lepidium meyenii* Walp.)	4–14B
Mizuna (*Brassica rapa* L. subsp. *nipposinica* (L. H. Bailey) Hanelt)	4–14B
Mustard greens (Brassica *juncea* subsp., including *Brassica juncea* (L.) Czern. subsp. *integrifolia* (H. West) Thell., *Brassica juncea* (L.) Czern. var. *tsatsai* (T. L. Mao) Gladis).	4–14B
Orach (*Atriplex hortensis* L.)	4–14A
Parsley, fresh leaves (*Petroselinum crispum* (Mill.) Nyman ex A.W. Hill; *Petroselinum crispum* var. *neapolitanum* Danert)	4–14A
Plantain, buckthorn (*Plantago lanceolata* L.)	4–14A
Primrose, English (*Primula vulgaris* Huds.)	4–14A
Purslane, garden (*Portulaca oleracea* L.)	4–14A
Purslane, winter (*Claytonia perfoliata* Donn ex Willd)	4–14A
Radicchio (*Cichorium intybus* L.)	4–14A
Radish, leaves (*Raphanus sativus* L. var *sativus,* including *Raphanus sativus* L. var. *mougri* H. W. J. Helm (*Raphanus sativus* L. var. *oleiformis* Pers).	4–14B
Rape greens (*Brassica napus* L. var. *napus,* including *Brassica rapa* subsp. *trilocularis* (Roxb.) Hanelt; *Brassica rapa* subsp. *dichotoma* (Roxb.) Hanelt; *Brassica rapa* subsp. *oleifera* Met).	4–14B
Rocket, wild (*Diplotaxis tenuifolia* (L.) DC.)	4–14B
Shepherd's purse (*Capsella bursa-pastoris* (L.) Medik)	4–14B
Spinach (*Spinacia oleracea* L.)	4–14A
Spinach, malabar (*Basella alba* L.)	4–14A
Spinach, New Zealand (*Tetragonia tetragonioides* (Pall.) Kuntze)	4–14A
Spinach, tanier (*Xanthosoma brasiliense* (Desf.) Engl.)	4–14A
Swiss chard (*Beta vulgaris* L. subsp. *Vulgaris*)	4–14A
Turnip greens (*Brassica rapa* L. subsp. *Rapa*)	4–14B
Violet, Chinese (*Asystasia gangetica* (L.) T. Anderson)	4–14A
Watercress (*Nasturtium officinale* W. T. Aiton)	4–14B
Cultivars, varieties, and hybrids of these commodities	

(iii) *Crop subgroups.* The following Table 2 identifies the crop subgroups for Crop Group 4–14, specifies the representative commodities for each subgroup, and lists all the commodities included in each subgroup.

TABLE 2—CROP GROUP 4–14: SUBGROUP LISTING

Representative commodities	Commodities
Crop Subgroup 4–14A. Leafy greens subgroup	
Head lettuce, leaf lettuce, and spinach.	Amaranth, Chinese; amaranth, leafy; aster, Indian; blackjack; cat's whiskers; chervil, fresh leaves; cham-chwi; cham-na-mul; chipilin; chrysanthemum, garland; cilantro, fresh leaves; corn salad; cosmos; dandelion; dang-gwi; dillweed; dock; dol-nam-mul; ebolo; endive; escarole; fameflower; feather cockscomb; good king henry; huauzontle; jute, leaves; lettuce, bitter; lettuce, head; lettuce, leaf; orach; parsley, fresh leaves; plantain, buckhorn; primrose, English; purslane, garden; purslane, winter; radicchio; spinach; spinach, malabar; spinach, New Zealand; spinach, tanier; swiss chard; violet, Chinese; cultivars, varieties, and hybrids of these commodities.
Crop Subgroup 4–14B. Brassica leafy greens subgroup	
Mustard greens	Arugula; broccoli raab; broccoli, Chinese; cabbage, abyssinian; cabbage, seakale; Chinese cabbage, bok choy; collards; cress, garden; cress, upland; hanover salad; kale; maca; mizuna; mustard greens; radish, leaves; rape greens; rocket, wild; shepherd's purse; turnip greens; watercress; cultivars, varieties, and hybrids of these commodities.

* * * * *

(8) *Crop Group 5–14.* Brassica Head and Stem Vegetable Group.

(i) *Representative commodities.* Broccoli or cauliflower and cabbage.

(ii) *Commodities.* The following List 1 contains all commodities included in Crop Group 5–14.

LIST 1—CROP GROUP 5–14: BRASSICA HEAD AND STEM VEGETABLE

Broccoli (*Brassica oleracea* L. var. *italica* Plenck).
Brussels sprouts (*Brassica oleracea* L. var. *gemmifera* (DC.) Zenker).
Cabbage (*Brassica oleracea* L. var. *capitata* L.).
Cabbage, Chinese, napa (*Brassica rapa* L. subsp. *pekinensis* (Lour.) Hanelt).
Cauliflower (*Brassica oleracea* L. var. *capitata* L.).
Cultivars, varieties, and hybrids of these commodities.

* * * * *

(25) * * *

(ii) *Commodities.* The commodities included in Crop Group 16 are: Forage, fodder, stover, and straw of all commodities included in the group cereal grains group. EPA may establish separate group tolerances on forage, fodder, hay, stover, or straw, if data on the representative commodities indicate differences in the levels of residues on forage, fodder, stover, or straw.

(26) * * *

(ii) *Commodities.* The commodities included in Crop Group 17 are: Forage, fodder, stover, and hay of any grass, Gramineae/Poaceae family (either green or cured) except sugarcane and those included in the cereal grains group, that will be fed to or grazed by livestock, all pasture and range grasses and grasses grown for hay or silage. EPA may establish separate group tolerances on forage, fodder, stover, or hay, if data on the representative commodities indicate differences in the levels of residues on forage, fodder, stover, or hay.

(27) * * *

(ii) *Commodities.* EPA may establish separate group tolerances on forage, fodder, straw, or hay, if data on the representative commodities indicate differences in the levels of residues on forage, fodder, straw, or hay. The following is a list of all the commodities included in Crop Group 18:

* * * * *

(31) *Crop Group 22.* Stalk, Stem and Leaf Petiole Vegetable Group.

(i) *Representative commodities.* Asparagus and celery.

(ii) *Commodities.* The following Table 1 lists all commodities included in Crop Group 22.

TABLE 1—CROP GROUP 22: STALK, STEM AND LEAF PETIOLE VEGETABLE GROUP

Commodities	Related crop subgroup
Agave (*Agave* spp.)	22A
Aloe vera (*Aloe vera* (L.) Burm.f.	22A
Asparagus (*Asparagus officinalis* L.)	22A
Bamboo, shoots (*Arundinaria* spp.; *Bambusa* spp., *Chimonobambusa* spp.; *Dendrocalamus* spp., *Fargesia* spp.; *Gigantochloa* spp., *Nastus elatus; Phyllostachys* spp.; *Thyrsostachys* spp.).	22A
Cardoon (*Cynara cardunculus* L.)	22B
Celery (*Apium graveolens* var. *dulce* (Mill.) Pers.)	22B
Celery, Chinese (*Apium graveolens* L. var. *secalinum* (Alef.) Mansf.)	22B
Celtuce (*Lactuca sativa* var. *angustana* L.H. Bailey)	22A
Fennel, Florence, fresh leaves and stalk (*Foeniculum vulgare* Mill. subsp. *vulgare* var. *azoricum* (Mill.) Thell.)	22A
Fern, edible, fiddlehead	22A
Fuki (*Petasites japonicus* (Siebold & Zucc.) Maxim.)	22B
Kale, sea (*Crambe maritima* L.)	22A
Kohlrabi (*Brassica oleracea* L. var *gongylodes* L.)	22A
Palm hearts (various species)	22A
Prickly pear, pads (*Opuntia ficus-indica* (L.) Mill., Opuntia spp.)	22A
Prickly pear, Texas, pads (*Opuntia engelmannii* Salm-Dyck ex Engelm. var. *lindheimeri* (Engelm.) B. D. Parfitt & Pinkav)	22A
Rhubarb (*Rheum x hybridum* Murray)	22B
Udo (*Aralia cordata* Thunb.)	22B
Zuiki (*Colocasia gigantea* (Blume) Hook. f.)	22B
Cultivars, varieties, and hybrids of these commodities.	

(iii) *Crop subgroups.* The following Table 2 identifies the crop subgroups for Crop Group 22, specifies the representative commodities for each subgroup, and lists all the commodities included in each subgroup.

TABLE 2—CROP GROUP 22: SUBGROUP LISTING

Representative commodities	Commodities
Crop Subgroup 22A. Stalk and stem vegetable subgroup	
Asparagus	Agave; aloe vera; asparagus; bamboo, shoots; celtuce; fennel, florence, fresh leaves and stalk; fern, edible; kale, sea; kohlrabi; palm hearts; prickly pear, pads; prickly pear, Texas, pads; cultivars, varieties, and hybrids of these commodities
Crop Subgroup 22B. Leaf petiole vegetable subgroup	
Celery	Cardoon; celery; celery, Chinese; fuki; rhubarb; udo; zuiki; cultivars, varieties, and hybrids of these commodities

(32) *Crop Group 23.* Tropical and Subtropical Fruit, Edible Peel Group.

(i) *Representative commodities.* Date, fig, guava, and olive.

(ii) *Commodities.* The following Table 1 lists all commodities included in Crop Group 23.

TABLE 1—CROP GROUP 23: TROPICAL AND SUBTROPICAL FRUIT, EDIBLE PEEL

Commodities	Related crop subgroup
Açaí (*Euterpe oleracea* Mart.)	23C
Acerola (*Malpighia emarginata* DC.)	23A
African plum (*Vitex doniana* Sweet)	23A
Agritos (*Berberis trifoliolata* Moric.)	23A
Almondette (*Buchanania lanzan* Spreng.)	23A
Ambarella (*Spondias dulcis* Sol. ex Parkinson)	23B
Apak palm (*Brahea dulcis* (Kunth) Mart.)	23C
Appleberry (*Billardiera scandens* Sm.)	23A
Arazá (*Eugenia stipitata* McVaugh)	23B
Arbutus berry (*Arbutus unedo* L.)	23A
Babaco (*Vasconcellea* x *heilbornii* (V. M. Badillo) V. M. Badillo)	23B
Bacaba palm (*Oenocarpus bacaba* Mart.)	23C
Bacaba-de-leque (*Oenocarpus distichus* Mart.)	23C
Bayberry, red (*Morella rubra* Lour.)	23A
Bignay (*Antidesma bunius* (L.) Spreng.)	23A
Bilimbi (*Averrhoa bilimbi* L.)	23B
Borojó (*Borojoa patinoi* Cuatrec.)	23B
Breadnut (*Brosimum alicastrum* Sw.)	23A
Cabeluda (*Plinia glomerata* (O. Berg) Amshoff)	23A
Cajou, fruit (*Anacardium giganteum* Hance ex Engl.)	23B
Cambucá (*Marlierea edulis* Nied.)	23B
Carandas-plum (*Carissa edulis* Vahl)	23A
Carob (*Ceratonia siliqua* L.)	23B
Cashew apple (*Anacardium occidentale* L.)	23B
Ceylon iron wood (*Manilkara hexandra* (Roxb.) Dubard)	23A
Ceylon olive (*Elaeocarpus serratus* L.)	23A
Cherry-of-the-Rio-Grande (*Eugenia aggregata* (Vell.) Kiaersk.)	23A
Chinese olive, black (*Canarium tramdenum* C. D. Dai & Yakovlev)	23A
Chinese olive, white (*Canarium album* (Lour.) Raeusch.)	23A
Chirauli-nut (*Buchanania latifolia* Roxb.)	23A
Ciruela verde (*Bunchosia armeniaca* (Cav.) DC.)	23B
Cocoplum (*Chrysobalanus icaco* L.)	23A
Date (*Phoenix dactylifera* L.)	23C
Davidson's plum (*Davidsonia pruriens* F. Muell.)	23B
Desert-date (*Balanites aegyptiacus* (L.) Delile)	23A
Doum palm coconut (*Hyphaene thebaica* (L.) Mart.)	23C
False sandalwood (*Ximenia americana* L.)	23A
Feijoa (*Acca sellowiana* (O. Berg) Burret)	23B
Fig (*Ficus carica* L.)	23B
Fragrant manjack (*Cordia dichotoma* G. Forst.)	23A
Gooseberry, abyssinian (*Dovyalis abyssinica* (A. Rich.) Warb.)	23A
Gooseberry, Ceylon (*Dovyalis hebecarpa* (Gardner) Warb.)	23A
Gooseberry, Indian (*Phyllanthus emblica* L.)	23B
Gooseberry, otaheite (*Phyllanthus acidus* (L.) Skeels)	23A
Governor's plum (*Flacourtia indica* (Burm. F.) Merr.)	23A
Grumichama (*Eugenia brasiliensis* Lam)	23A
Guabiroba (*Campomanesia xanthocarpa* O. Berg)	23A

TABLE 1—CROP GROUP 23: TROPICAL AND SUBTROPICAL FRUIT, EDIBLE PEEL—Continued

Commodities	Related crop subgroup
Guava (*Psidium guajava* L.)	23B
Guava berry (*Myrciaria floribunda* (H. West ex Willd.) O. Berg)	23A
Guava, Brazilian (*Psidium guineense* Sw.)	23A
Guava, cattley (*Psidium cattleianum* Sabine)	23B
Guava, Costa Rican (*Psidium friedrichsthalianum* (O. Berg) Nied.)	23A
Guava, para (*Psidium acutangulum* DC.)	23B
Guava, purple strawberry (*Psidium cattleianum* Sabine var. *cattleianum*)	23B
Guava, strawberry (*Psidium cattleianum* Sabine var. *littorale* (Raddi) Fosberg)	23B
Guava, yellow strawberry (*Psidium cattleianum* Sabine var. *cattleianum forma lucidum* O. Deg.)	23B
Guayabillo (*Psidium sartorianum* (O. Berg) Nied.)	23A
Illawarra plum (*Podocarpus elatus* R. Br. Ex Endl.)	23A
Imbé (*Garcinia livingstonei* T. Anderson)	23B
Imbu (*Spondias tuberosa* Arruda ex Kost.)	23B
Indian-plum (*Flacourtia jangomas* (Lour.). basionym)	23A
Jaboticaba (*Myrciaria cauliflora* (Mart.) O. Berg)	23B
Jamaica-cherry (*Muntingia calabura* L.)	23A
Jambolan (*Syzygium cumini* (L.) Skeels)	23A
Jelly palm (*Butia capitata* (Mart.) Becc.)	23C
Jujube, Indian (*Ziziphus mauritiana* Lam.)	23B
Kaffir-plum (*Harpephyllum caffrum* Bernh. Ex C. Krauss)	23A
Kakadu plum (*Terminalia latipes* Benth. subsp. *psilocarpa* Pedley)	23A
Kapundung (*Baccaurea racemosa* (Reinw.) Mull. Arg.)	23A
Karanda (*Carissa carandas* L.)	23A
Kwai muk (*Artocarpus hypargyreus* Hance ex Benth.)	23B
Lemon aspen (*Acronychia acidula* F. Muell)	23A
Mangaba (*Hancornia speciosa* Gomes)	23B
Marian plum (*Bouea macrophylla* Griff.)	23B
Mombin, malayan (*Spondias pinnata* (J. Koenig ex L. f.) Kurz)	23B
Mombin, purple (*Spondias purpurea* L.)	23B
Mombin, yellow (*Spondias mombin* L.)	23A
Monkeyfruit (*Artocarpus lacucha* Buch. Ham.)	23B
Monos plum (*Pseudanamomis umbellulifera* (Kunth) Kausel)	23A
Mountain cherry (*Bunchosia cornifolia* Kunth)	23A
Nance (*Byrsonima crassifolia* (L.) Kunth)	23B
Natal plum (*Carissa macrocarpa* (Eckl.) A. DC.)	23B
Noni (*Morinda citrifolia* L.)	23B
Olive (*Olea europaea* L. subsp. *europaea*)	23A
Papaya, mountain (*Vasconcellea pubescens* A. DC.)	23B
Patauá (*Oenocarpus bataua* Mart.)	23C
Peach palm, fruit (*Bactris gasipaes* Kunth var. *gasipaes*)	23C
Persimmon, black (*Diospyros texana* Scheele)	23A
Persimmon, Japanese (*Diospyros kaki* Thunb.)	23B
Pitomba (*Eugenia luschnathiana* Klotzsch ex O. Berg)	23A
Plum-of-Martinique (*Flacourtia inermis* Roxb.)	23A
Pomerac (*Syzygium malaccense* (L.) Merr. & L.M. Perry)	23B
Rambai (*Baccaurea motleyana* (Mull. Arg.) Mull. Arg.)	23B
Rose apple (*Syzygium jambos* (L.) Alston)	23B
Rukam (*Flacourtia rukam* Zoll. & Moritizi)	23A
Rumberry (*Myrciaria dubia* (Kunth) Mc Vaugh *Myrtaceae*)	23A
Sea grape (*Coccoloba uvifera* (L.) L.)	23A
Sentul (*Sandoricum koetjape* (Burm. F.) Merr.)	23B
Sete-capotes (*Campomanesia guazumifolia* (Cambess.) O. Berg)	23A
Silver aspen (*Acronychia wilcoxian* (F. Muell.) T.G. Hartley)	23A
Starfruit (*Averrhoa carambola* L.)	23B
Surinam cherry (*Eugenia uniflora* L.)	23B
Tamarind (*Tamarindus indica* L.)	23B
Uvalha (*Eugenia pyriformis* Cambess)	23B
Water apple (*Syzygium aqueum* (Burm. F.) Alston)	23A
Water pear (*Syzygium guineense* (Willd.) DC)	23A
Water berry (*Syzygium cordatum* Hochst. Ex C. Krauss)	23A
Wax jambu (*Syzygium samarangense* (Blume) Merr. & L.M. Perry)	23A
Cultivars, varieties, and hybrids of these commodities	

(iii) *Table.* The following Table 2 identifies the crop subgroups for Crop Group 23, specifies the representative commodities for each subgroup, and lists all the commodities included in each subgroup.

TABLE 2—CROP GROUP 23: SUBGROUP LISTING

Representative commodities	Commodities
Crop Subgroup 23A. Small fruit, edible peel subgroup	
Olive	Acerola; African plum; agritos; almondette; appleberry; arbutus berry; bayberry, red; bignay; breadnut; cabeluda; carandas-plum; Ceylon iron wood; Ceylon olive; cherry-of-the-Rio-Grande; Chinese olive, black; Chinese olive, white; chirauli-nut; cocoplum; desert-date; false sandalwood; fragant manjack; gooseberry, abyssinian; gooseberry, Ceylon; gooseberry, otaheite; governor's plum; grumichama; guabiroba; guava berry; guava, Brazilian; guava, Costa Rican; guayabillo; illawarra plum; Indian-plum; Jamaica-cherry; jambolan; kaffir-plum; kakadu plum; kapundung; karnada; lemon aspen; mombin, yellow; monos plum; mountain cherry; olive; persimmon, black; pitomba; plum-of-martinique; rukam; rumberry; sea grape; sete-capotes; silver aspen; water apple; water pear; water berry; wax jambu; cultivars, varieties, and hybrids of these commodities.
Crop Subgroup 23B. Medium to large fruit, edible peel subgroup	
Fig and guava	Ambarella; arazá; babaco; bilimbi; borojó; cajou, fruit; cambucá; carob; cashew apple; ciruela verde; Davidson's plum; feijoa; fig; gooseberry, Indian; guava; guava, cattley; guava, para; guava, purple strawberry; guava, strawberry; guava, yellow strawberry; imbé; imbu; jaboticaba; jujube, Indian; kwai muk; mangaba; Marian plum; mombin, Malayan; mombin, purple; monkeyfruit; nance; natal plum; noni; papaya, mountain; persimmon, Japanese; pomerac; rambai; rose apple; sentul; starfruit; Surinam cherry; tamarind; uvalha; cultivars, varieties, and hybrids of these commodities.
Crop Subgroup 23C. Palm fruit, edible peel subgroup	
Date	Açaí; apak palm; bacaba palm; bacaba-de-leque; date; doum palm coconut; jelly palm; patauá; peach palm, fruit; cultivars, varieties, and hybrids of these commodities.

(33) *Crop Group 24.* Tropical and Subtropical Fruit, Inedible Peel Group.

(i) *Representative commodities.* Atemoya or sugar apple, avocado, banana or pomegranate, dragon fruit, lychee, passionfruit, pineapple, and prickly pear, fruit.

(ii) *Commodities.* The following Table 1 lists all commodities included in Crop Group 24.

TABLE 1—CROP GROUP 24: TROPICAL AND SUBTROPICAL FRUIT, INEDIBLE PEEL

Commodities	Related crop subgroup
Abiu (*Pouteria caimito* (Ruiz & Pav.) Radlk)	24B
Aisen (*Boscia senegalensis* (Pers.) Lam.)	24A
Akee apple (*Blighia sapida* K.D. Koenig)	24B
Atemoya (*Annona cherimola* Mill. X A. squamosa L.)	24C
Avocado (*Persea americana* Mill.)	24B
Avocado, Guatemalan (*Persea americana* Mill. var. *guatemalensis*)	24B
Avocado, Mexican (*Persea americana* Mill. var. *drymifolia* (Schltdl. & Cham.) S. F. Blak)	24B
Avocado, West Indian (*Persea americana* var. *americana*)	24B
Bacury (*Platonia insignis* Mart.)	24B
Bael fruit (*Aegle marmelos* (L.) Corrêa)	24A
Banana (*Musa* spp.)	24B
Banana, dwarf (*Musa* hybrids; *Musa acuminata* Colla)	24B
Binjai (*Mangifera caesia* Jack)	24B
Biriba (*Annona mucosa* Jacq.)	24C
Breadfruit (*Artocarpus altilis* (Parkinson) Fosberg)	24C
Burmese grape (*Baccaurea ramiflora* Lour.)	24A
Canistel (*Pouteria campechiana* (Kunth) Baehni)	24B
Cat's-eyes (*Dimocarpus longan* Lour. subsp. *malesianus* Leenh.)	24A
Champedak (*Artocarpus integer* (Thunb.) Merr.)	24C
Cherimoya (*Annona cherimola* Mill.)	24C
Cupuacú (*Theobroma grandiflorum* (Willd. Ex Spreng.) K. Schum.)	24B
Custard apple (*Annona reticulata* L.)	24C
Dragon fruit (*Hylocereus undatus* (Haw.) Britton & Rose)	24D
Durian (*Durio zibethinus* L.)	24C
Elephant-apple (*Limonia acidissima* L.)	24C
Etambe (*Mangifera zeylanica* (Blume) Hook. F.)	24B
Granadilla (*Passiflora ligularis* Juss.)	24E
Granadilla, giant (*Passiflora quadrangularis* L.)	24E
Ilama (*Annona macroprophyllata* Donn. Sm.)	24C
Ingá (*Inga vera* Willd. subsp. *affinis* (DC.) T. D. Penn.)	24A
Jackfruit (*Artocarpus heterophyllus* Lam.)	24C
Jatobá (*Hymenaea courbaril* L.)	24B
Karuka (*Pandanus julianettii* Martelli)	24C
Kei apple (*Dovyalis caffra* (Hook. F. & Harv.) Warb.)	24B
Langsat (*Lansium domesticum* Corrêa)	24B

TABLE 1—CROP GROUP 24: TROPICAL AND SUBTROPICAL FRUIT, INEDIBLE PEEL—Continued

Commodities	Related crop subgroup
Lanjut (*Mangifera lagenifera* Griff.)	24B
Longan (*Dimocarpus longan* Lour.)	24C
Lucuma (*Pouteria lucuma* (Ruiz & Pav.) Kuntze)	24B
Lychee (*Litchi chinensis* Sonn.)	24A
Mabolo (*Diospyros blancoi* A. DC.)	24B
Madras-thorn (*Pithecellobium dulce* (Roxb.) Benth.)	24A
Mammy-apple (*Mammea americana* L)	24C
Manduro (*Balanites maughamii* Sprague)	24A
Mango (*Mangifera indica* L.)	24B
Mango, horse (*Mangifera foetida* Lour.)	24B
Mango, Saipan (*Mangifera odorata* Griff.)	24B
Mangosteen (*Garcinia mangostana* L.)	24B
Marang (*Artocarpus odoratissimus* Blanco)	24C
Marmaladebox (*Genipa americana* L.)	24C
Matisia (*Matisia cordata* Humb. & Bonpl.)	24A
Mesquite (*Prosopis juliflora* (Sw.) DC.)	24A
Mongongo, fruit (*Schinziophyton rautanenii* (Schinz) Radcl.-Sm)	24A
Monkey-bread-tree (*Adansonia digitata* L.)	24C
Monstera (*Monstera deliciosa* Liebm.)	24E
Nicobar-breadfruit (*Pandanus leram* Jones ex Fontana)	24C
Paho (*Mangifera altissima* Blanco)	24B
Pandanus (*Pandanus utilis* Bory)	24C
Papaya (*Carica papaya* L.)	24B
Passionflower, winged-stem (*Passiflora alata* Curtis)	24E
Passionfruit (*Passiflora edulis* Sims)	24E
Passionfruit, banana (*Passiflora tripartita* var. *mollissima* (Kunth) Holm-Niels. & P. Jorg.)	24E
Passionfruit, purple (*Passiflora edulis* Sims forma *edulis*)	24E
Passionfruit, yellow (*Passiflora edulis* Sims forma *flavicarpa* O. Deg.)	24E
Pawpaw, common (*Asimina triloba* (L.) Dunal)	24B
Pawpaw, small-flower (*Asimina parviflora* (Michx.) Dunal)	24A
Pelipisan (*Mangifera casturi* Kosterm.)	24B
Pequi (*Caryocar brasiliense* Cambess)	24B
Pequia (*Caryocar villosum* (Aubl.) Pers.)	24B
Persimmon (American (*Diospyros virginiana* L.)	24B
Pineapple (*Ananas comosus* (L.) Merr.)	24C
Pitahaya (*Hylocereus polyrhizus* (F. A. C. Weber) Britton & Rose)	24D
Pitaya (*Hylocereus* sp. Including *H. megalanthus* (*H. ocamponis* and *H. polychizus*)	24D
Pitaya, amarilla (*Hylocereus triangularis* Britton & Rose)	24D
Pitaya, roja (*Hylocereus ocamponis* (Salm-Dyck) Britton & Rose)	24D
Pitaya, yellow (*Hylocereus megalanthus* (K. Schum. ex Vaupel) Ralf Bauer)	24D
Plantain (*Musa paradisiaca* L.)	24B
Pomegranate (*Punica granatum* L.)	24B
Poshte (*Annona liebmanniana* Baill.)	24B
Prickly pear, fruit (*Opuntia ficus-indica* (L.) Mill.)	24D
Prickly pear, Texas, fruit (*Opuntia engelmannii* Salm-Dyck ex Engelm. var. *lindheimeri* (Engelm.) B. D. Parfitt & Pinkav)	24D
Pulasan (*Nephelium ramboutan-ake* (Labill.) Leenh.)	24C
Quandong (*Santalum acuminatum* (R. Br.) DC.)	24B
Rambutan (*Nephelium lappaceum* L.)	24C
Saguaro (*Carnegiea gigantea* (Engelm.) Britton & Rose)	24D
Sapodilla (*Manilkara zapota* (L.) P. Royen)	24C
Sapote, black (*Diospyros digyna* Jacq.)	24B
Sapote, green (*Pouteria viridis* (Pittier) Cronquist)	24B
Sapote, mamey (*Pouteria sapota* (Jacq.) H.E. Moore & Stearn)	24C
Sapote, white (*Casimiroa edulis* La Llave & Lex)	24B
Sataw (*Parkia speciosa* Hassk.)	24B
Satinleaf (*Chrysophyllum oliviforme* L.)	24A
Screw-pine (*Pandanus tectorius* Parkinson)	24B
Sierra Leone-tamarind (*Dialium guineense* Willd.)	24A
Soncoya (*Annona purpurea* Moc. & Sessé ex Dunal)	24C
Soursop (*Annona muricata* L.)	24C
Spanish lime (*Melicoccus bijugatus* Jacq.)	24A
Star apple (*Chrysophyllum cainito* L.)	24B
Sugar apple (*Annona squamosa* L.)	24C
Sun sapote (*Licania platypus* (Hemsl.) Fritsch)	24C
Tamarind-of-the-Indies (*Vangueria madagascariensis* J. F. Gmel.)	24B
Velvet tamarind (*Dialium indum* L.)	24A
Wampi (*Clausena lansium* (Lour.) Skeels)	24A
White star apple (*Chrysophyllum albidum* G. Don)	24A
Wild loquat (*Uapaca kirkiana* Müll. Arg.)	24B
Cultivars, varieties, and hybrids of these commodities	

(iii) *Table.* The following Table 2 identifies the crop subgroups for Crop Group 24, specifies the representative commodities for each subgroup, and lists all the commodities included in each subgroup.

TABLE 2—CROP GROUP 24: SUBGROUP LISTING

Representative commodities	Commodities
Crop Subgroup 24A. Small fruit, inedible peel subgroup	
Lychee	Aisen; bael fruit; Burmese grape; cat's eyes; ingá; lychee; madras-thorn; manduro; matisia; mesquite; mongongo, fruit; pawpaw, small-flower; satinleaf; Sierra Leone-tamarind; Spanish lime; velvet tamarind; wampi; white star apple; cultivars, varieties, and hybrids of these commodities.
Crop Subgroup 24B. Medium to large fruit, smooth, inedible peel subgroup	
Avocado, plus pomegranate or banana.	Abiu; akee apple; avocado; avocado, Guatemalan; avocado, Mexican; avocado, West Indian; bacury; banana; banana, dwarf; binjai; canistel; cupuacú; etambe; jatobá; kei apple; langstat; lanjut; lucuma; mabolo; mango; mango, horse; mango, Saipan; mangosteen; paho; papaya; pawpaw, common; pelipisan; pequi; pequia; persimmon, American; plantain; pomegranate; poshte; quandong; sapote, black; sapote, green; sapote, white; sataw; screw-pine; star apple; tamarind-of-the-Indies; wild loquat; cultivars, varieties, and hybrids of these commodities.
Crop Subgroup 24C. Medium to large fruit, rough or hairy, inedible peel subgroup	
Pineapple, plus Atemoya or sugar apple.	Atemoya; biriba; breadfruit; champedak; cherimoya; custard apple; durian; elephant-apple; ilama; jackfruit; karuka; longan; mammy-apple; marmalade-box; marang; monkey-bread tree; nicobar-breadfruit; pandanus; pineapple; pulasan; rambutan; sapodilla; sapote, mamey; soncoya; soursop; sugar apple; sun sapote; cultivars, varieties, and hybrids of these commodities.
Crop Subgroup 24D. Cactus, inedible peel subgroup	
Dragon fruit and Prickly pear fruit.	Dragon fruit; pitahaya; pitaya; pitaya amarilla; pitaya roja; pitaya, yellow; prickly pear, fruit; prickly pear, Texas, fruit; saguaro; cultivars, varieties, and hybrids of these commodities.
Crop Subgroup 24E. Vine, inedible peel subgroup	
Passionfruit	Granadilla; granadilla, giant; monstera; passionflower, winged-stem; passionfruit; passionfruit, banana; passionfruit, purple; passionfruit, yellow; cultivars, varieties, and hybrids of these commodities.

[FR Doc. 2014–26661 Filed 11–13–14; 8:45 am]
BILLING CODE 6560–50–P

FEDERAL COMMUNICATIONS COMMISSION

47 CFR Parts 1 and 27

[RM–11395, GN Docket No. 12–268, WT Docket Nos. 14–170, 05–211; FCC 14–146]

Updating Competitive Bidding Rules; Expanding the Economic and Innovation Opportunities of Spectrum Through Incentive Auctions; Implementation of the Commercial Spectrum Enhancement Act

AGENCY: Federal Communications Commission.

ACTION: Proposed rule.

SUMMARY: This Notice of Proposed Rulemaking (NPRM) seeks comment on the revision of certain competitive bidding rules and provides notice of the Commission's intention to resolve longstanding petitions for reconsideration.

DATES: Comments are due on or before December 29, 2014 and reply comments are due on or before January 20, 2015.

ADDRESSES: All filings in response to the NPRM must refer to GN Docket No. 12–268 and WT Docket Nos. 14–170 and 05–211. The Commission strongly encourages parties to develop responses to the NPRM that adhere to the organization and structure of the NPRM. Comments may be filed using the Commission's Electronic Comment Filing System (ECFS):

- Electronic Filers: Comments may be filed electronically using the Internet by accessing ECFS: *http://fjallfoss.fcc.gov/ecfs2.*
- Paper Filers: Parties who choose to file by paper must file an original and one copy of each filing. If more than one docket or rulemaking number appears in the caption of this proceeding, filers must submit two additional copies for each additional docket or rulemaking number.

Filings can be sent by hand or messenger delivery, by commercial overnight courier, or by first-class or overnight U.S. Postal Service mail. All filings must be addressed to the Commission's Secretary, Office of the Secretary, Federal Communications Commission.

All hand-delivered or messenger-delivered paper filings for the Commission's Secretary must be delivered to FCC Headquarters at 445 12th Street SW., Room TW–A325, Washington, DC 20554. The filing hours are 8:00 a.m. to 7:00 p.m. All hand deliveries must be held together with rubber bands or fasteners. Any envelopes and boxes must be disposed of before entering the building.

Commercial overnight mail (other than U.S. Postal Service Express Mail and Priority Mail) must be sent to 9300 East Hampton Drive, Capitol Heights, MD 20743.

U.S. Postal Service first-class, Express, and Priority mail must be addressed to 445 12th Street SW., Washington, DC 20554.

People with Disabilities: To request materials in accessible formats for people with disabilities (braille, large print, electronic files, or audio format), send an email to *fcc504@fcc.gov* or call the Consumer & Governmental Affairs Bureau at 202–418–0530 (voice), 202–418–0432 (TTY).

FOR FURTHER INFORMATION CONTACT: Wireless Telecommunications Bureau, Auctions and Spectrum Access Division: Kathryn Hinton at (202) 418–0660.

SUPPLEMENTARY INFORMATION: This is a summary of the *Competitive Bidding NPRM* released on October 10, 2014. The complete text of the *Competitive Bidding NPRM* is available for public inspection and copying from 8:00 a.m. to 4:30 p.m. Eastern Time (ET) Monday through Thursday or from 8:00 a.m. to 11:30 a.m. ET on Fridays in the FCC Reference Information Center, 445 12th Street SW., Room CY–A257, Washington, DC 20554. The *Competitive Bidding NPRM* may be purchased from the Commission's duplicating contractor, Best Copy and Printing, Inc. (BCPI), 445 12th Street SW., Room CY–B402, Washington, DC 20554, telephone 202–488–5300, facsimile 202–488–5563, or by contacting BCPI on its Web site: *http://www.BCPIWEB.com.* When ordering documents from BCPI, please provide the appropriate FCC document number, for example, FCC 14–146. The complete text is also available on the Commission's Web site at *http://wireless.fcc.gov,* or by using the search function on the ECFS Web page at *http://www.fcc.gov/cgb/ecfs.*

Initial Paperwork Reduction Act of 1995 Analysis

The NPRM contains proposed new or modified information collection requirements. The Commission, as part of its continuing effort to reduce paperwork burdens, invites the general public and the Office of Management and Budget (OMB) to comment on the information collection requirements contained in this document, as required by the Paperwork Reduction Act of 1995, Public Law 104–13. In addition, pursuant to the Small Business Paperwork Relief Act of 2002, Public Law 107–198, see 44 U.S.C. 3506(c)(4), the Commission seeks specific comment on how it might further reduce the information collection burden for small business concerns with fewer than 25 employees.

I. Introduction

1. The Commission proposes to reform some of its general part 1 rules governing competitive bidding for spectrum licenses to reflect changes in the marketplace, including the challenges faced by new entrants. The Commission's proposals also advance the statutory directive to ensure that small businesses, rural telephone companies, and businesses owned by members of minority groups and women (collectively, designated entities or DEs) are given the opportunity to participate in the provision of spectrum-based services, and fulfill the commitment the Commission made in the *Broadcast Television Spectrum Incentive Auction Report & Order. Expanding the Economic and Innovation Opportunities of Spectrum Through Incentive Auctions,* 79 FR 48442, Aug. 15, 2014. Together these proposals will assure that the Commission's part 1 rules continue to promote the Commission's fundamental statutory objectives. The Commission expects to act on the issues it raises here soon enough to allow all parties to account for any changes while planning for the Broadcast Television Spectrum Incentive Auction (hereinafter, Incentive Auction or BIA).

2. In the *Competitive Bidding NPRM,* the Commission proposes to: (1) Provide small businesses greater opportunity to participate in the provision of a wide range of spectrum-based services by modifying the Commission's eligibility requirements, updating the standardized schedule of small business sizes, and eliminating duplicative reporting requirements, while also seeking comment on whether to strengthen its rules to prevent the unjust enrichment of ineligible entities; (2) Amend the Commission's former defaulter rule to balance concerns that the current rule is overly broad with the Commission's continued need to ensure that auction bidders are financially reliable; (3) Codify an established competitive bidding procedure that prohibits the same individual or entity from becoming qualified to bid on the basis of more than one short-form (FCC Form 175) application in a specific auction; (4) Prevent entities that are exclusively controlled by a single individual or set of individuals from becoming qualified to bid on overlapping licenses based on more than one short-form application in a specific auction; and (5) Retain the current rules governing joint bidding arrangements among non-nationwide providers and prohibit joint bidding arrangements among nationwide providers.

3. The Commission also provides notice of its intention to resolve long standing petitions for reconsideration and proposes necessary clean-up revisions to its part 1 competitive bidding rules.

II. Eligibility for Bidding Credits

4. In establishing the Commission's auction authority, Congress vested the Commission with broad discretion in balancing a number of competing objectives. These included, among other things, special provisions to ensure that DEs, including small businesses, have the opportunity to participate at auction and in the provision of spectrum-based services. Section 309(j)(4)(D) of the Communications Act (the Act) requires that when the Commission prescribes regulations in designing systems of competitive bidding, it shall ''ensure that small businesses, rural telephone companies, and businesses owned by members of minority groups and women are given the opportunity to participate in the provision of spectrum-based services, and, for such purposes, consider the use of . . . bidding preferences.'' In addition, the statute directs that in designing such systems of competitive bidding, the Commission shall seek to promote ''economic opportunity and competition . . . by avoiding excessive concentration of licenses and by disseminating licenses among a wide variety of applicants, including small businesses, rural telephone companies, and businesses owned by members of minority groups and women.'' At the same time, the Act requires the Commission to ''prevent unjust enrichment as a result of the methods employed to issue licenses. . . .''

5. The Commission's challenge in providing opportunities to small businesses and entrepreneurs pursuant to these provisions has always been to find a reasonable balance between the competing goals of affording such entities reasonable flexibility to obtain the capital necessary to participate in the provision of spectrum-based services and effectively preventing the unjust enrichment of ineligible entities. *See Implementation of the Commercial Spectrum Enhancement Act and Modernization of the Commission's Competitive Bidding Rules and Procedures,* 71 FR 26245, May 4, 2006 *(DE Second Report and Order).* Over the two-decade span of the auctions program, the Commission has periodically modified its rules to achieve the right balance given changing circumstances in the wireless industry.

6. The Commission takes the opportunity to consider whether its rules continue to serve their intended purposes and the public interest in an evolving mobile wireless marketplace. In the past decade, the rapid adoption of smartphones and tablet computers and the widespread use of mobile applications, combined with the increasing deployment of high-speed 3G and now 4G technologies, have driven significantly more intensive use of mobile networks. This progression from the provision of mobile voice services to the provision of mobile broadband services has increased the need for access to spectrum. In addition, in the past decade, the number of small and regional mobile wireless service providers has significantly decreased, yet regional and local service providers continue to offer consumers additional

choices in the areas they serve. As the costs of spectrum and network deployment have increased in the last 20 years, especially for small and new entrants, access to capital for acquiring licenses is critical for these providers to take advantage of different opportunities to participate in the provision of spectrum-based services, including through facilities-based deployment, spectrum leasing, and mobile virtual network operator arrangements.

7. The Commission addresses the concerns of parties that argue that its current rules inhibit, rather than foster, the inclusion of small businesses in the wireless marketplace. The Commission offers proposals to increase the opportunities for small businesses to become spectrum licensees. At the same time, the Commission remains mindful of its responsibility to ensure that benefits are provided only to qualifying entities and seeks comment on modifying its current unjust enrichment rules.

8. As a first step in reassessing how the Commission determines small business eligibility, the Commission proposes to repeal the attributable material relationship (AMR) rule and to re-examine the need for the related decade-old policy that has limited small businesses seeking bidding credits to providing primarily retail, facilities-based service directly to the public with each of their licenses. The Commission proposes to instead adopt a more flexible approach under which it would evaluate small business eligibility on a license-by-license basis, using a two-pronged test. Under this proposal, the Commission would apply existing rules requiring attribution of controlling interests in, and affiliates of, a small business venture to determine whether the applicant: (1) Meets the applicable small business size standard, and (2) retains control over the spectrum associated with the individual licenses for which it seeks benefits. The Commission further proposes to modify the language of 47 CFR 1.9020 to make clear that DE lessors may fully engage in spectrum manager leasing under the same *de facto* control standard as non-DE lessors. With these proposals, the Commission revisits its statutory mandate under 47 U.S.C. 309(j)(4)(D) ''to ensure that small businesses, rural telephone companies, and businesses owned by members of minority groups and women are given the opportunity to participate in the provision of spectrum-based services'' in light of today's wireless marketplace. Alternatively, the Commission also seeks comment on retaining the policy and/or some variation of the AMR rule. The Commission also asks whether it should revisit its unjust enrichment rules to assure that the Commission maintains the right balance considering its responsibility to safeguard the award of small business benefits to only eligible entities.

9. The Commission also proposes to modify the generally applicable schedule of small business size standards and bidding credits, which has remained unchanged in the 17 years since it was first adopted. The goal of these proposals is to encourage small business participation in spectrum license auctions and to ensure that the Commission's gross revenue definitions accurately reflect what constitutes a ''small business'' in today's marketplace, taking into consideration the relative size of the large, national providers. Specifically, the Commission proposes revisions to its small business definitions and seeks comment on whether to change the bidding credit percentages that would apply to those definitions. The Commission also seeks comment on whether to offer alternative bidding preferences to entities based on criteria other than business size by revenue.

10. Additionally, the Commission proposes to repeal the DE annual reporting requirement. The Commission questions whether the value of the information provided in those reports outweighs the regulatory burden that the reporting obligation places on small businesses.

11. Collectively, these proposals seek to update the Commission's rules to reflect that small businesses need greater opportunities to gain access to capital so that they may have an opportunity to participate in the provision of spectrum-based services in today's communications marketplace. The Commission recognizes that high capital costs associated with building and operating wireless broadband networks may require small businesses to find alternative revenue streams, including through secondary markets, so that they have an opportunity to acquire licenses at auction and participate in the provision of spectrum-based services. The Commission anticipates that by revising its rules to allow small businesses to take advantage of the same opportunities to utilize their spectrum capacity and gain access to capital as those afforded to larger licensees, the Commission can better achieve its statutory directives. The Commission nonetheless remains mindful of its obligation to prevent unjust enrichment of ineligible entities. The Commission describes and seeks comment on each of its specific proposals.

A. Attribution Rules and Small Business Policies

12. *Background.* As its principal means of fulfilling the statutory goals for DEs, the Commission makes auction bidding credits available to eligible small businesses. A small business is eligible for bidding credits if its gross revenues, in combination with those of its ''attributable'' interest holders, fall below applicable service-specific financial caps. Since 2000, the Commission has applied a ''controlling interest'' standard to all services when making these attribution determinations in the small business context. Under this standard, the Commission attributes to an applicant the gross revenues of the applicant, its controlling interests, its affiliates, and the affiliates of the applicant's controlling interests. A ''controlling interest'' includes individuals or entities, or groups of individuals or entities, that have control of the applicant under the principles of either *de jure* or *de facto* control. Affiliates include entities or individuals that directly or indirectly control or have the power to control the applicant, directly or indirectly are controlled by the applicant, directly or indirectly are controlled by a third party that also controls the applicant, or have an ''identity of interest'' with the applicant.

13. In adopting secondary markets rules in the 2004 *Secondary Markets Second Report and Order,* the Commission sought to expand and enhance secondary markets to permit spectrum to flow more freely among users and uses in response to economic demand, to the extent consistent with its public interest objectives. *Promoting Efficient Use of Spectrum Through Elimination of Barriers to the Development of Secondary Markets, Second Report and Order, Order on Reconsideration, and Second Further Notice of Proposed Rulemaking,* 69 FR 77522, Dec. 27, 2004 *(Secondary Markets Second Report and Order).* The Commission explained that it intended for its rules to allow more flexible use of spectrum by licensees and other spectrum users, better define licensees' and spectrum users' rights and responsibilities, enable the use of spectrum across various dimensions (frequency, space, and time), promote the efficient use of spectrum, and provide for continued technological advances. While the Commission ostensibly extended the new *de facto* control standard for spectrum manager leasing to DE lessors, it nonetheless required that a licensee receiving DE

benefits be an entity that actually provides service under the license. The Commission explained that it intended that DEs should remain primarily providers of facilities-based service directly to the public. That conclusion was based on an interpretation of the legislative history underlying the Act's provisions regarding unjust enrichment, as well as the continued application of the Commission's controlling interest standard and affiliation rules.

14. In the *Secondary Markets Second Report and Order,* the Commission also advised that in examining whether a spectrum lessee would, under a spectrum manager lease, become a controlling interest or affiliate of the licensee, the licensee should look to all of the relevant circumstances, including how large a portion of its total capacity to provide spectrum-based services would be leased, what involvement it would have with the spectrum lessee as a result of the spectrum lease, and what relationship the two parties have with one another apart from the lease. The Commission concluded that a spectrum manager lease between a designated entity licensee and a spectrum lessee with a prior business relationship where substantially all of the spectrum capacity of the licensee is to be leased would cause the spectrum lessee to become an attributable affiliate of the licensee. Such affiliation would render the licensee ineligible for designated entity or entrepreneur benefits and, therefore, would make such a spectrum lease impermissible. On the other hand, the Commission reasoned that a spectrum manager lease involving a small portion of the designated entity or entrepreneur licensee's spectrum capacity where no relationship existed between the licensee and spectrum lessee apart from the lease would likely be permissible. Situations falling somewhere between these two examples would have to be evaluated according to the individual circumstances involved.

15. Subsequently in 2006, at the behest of interested parties, including Council Tree, the Commission released a further notice, which sought comment on the specific nature of the types of relationships that should trigger the attribution of revenues to determine eligibility for designated entity benefits. *See Implementation of the Commercial Spectrum Enhancement Act and Modernization of the Commission's Competitive Bidding Rules and Procedures,* 71 FR 6992, Feb. 10, 2006. For instance, Council Tree initially proposed that the Commission should restrict a designated entity applicant's ''material relationships,'' including both financial and operational agreements, in order to more carefully ensure that designated entity benefits are awarded only to bona fide eligible entities. In the *DE Second Report and Order,* the Commission, to further protect against unjust enrichment, departed from its case-by-case approach and instead adopted a bright-line test to require a small business applicant or licensee to automatically attribute to itself the gross revenues of any entity with which it had an ''attributable material relationship.'' It reasoned that an agreement that concerns the actual use of the DE's spectrum capacity is one that causes the relationship to be ripe for abuse and creates the potential for the relationship to impede a DE's ability to become a facilities-based provider, as intended by Congress. The Commission concluded that an applicant or licensee has an AMR when it has one or more agreements with any individual entity for the lease (under either spectrum manager or *de facto* transfer leasing arrangements) or resale (including under a wholesale arrangement) of, on a cumulative basis, more than 25 percent of the spectrum capacity of any individual license held by the applicant or licensee.

16. Council Tree and others challenged the AMR rule and other aspects of the Commission's 2006 Order in the United States Court of Appeals for the Third Circuit on the grounds that they failed to take into account circumstances regarding small businesses' access to capital, among other things. In subsequent years, the Office of Advocacy in the U.S. Small Business Administration (SBA) also expressed its belief to the Commission that the 2006 changes to the small business rules had ''inhibited participation by small entities and minority businesses in recent spectrum auctions,'' and that the changes were unnecessary in light of the availability of the audit process included in the Commission's original auction rules. In 2010, although the court ultimately upheld the AMR rule, it nonetheless questioned some of the Commission's reasoning, noting what it termed the Commission's ''inattention'' to the nature of the wireless wholesale business. Questioning why the Commission chose to attribute certain relationships to achieve its stated policy of DEs as facilities-based providers, the court observed that wholesaling includes an extensive provision of service component. The court said that it was therefore not obvious that the Commission needed to prohibit DEs from engaging primarily in a wholesale business in order to prevent them from simply monetizing their bidding credits with a large carrier, ''so long as [DEs] do not sell or lease overly large quantities of their capacity to any single lessee or buyer.'' Remarking that the Commission appeared not to have acknowledged this issue, the court commended it to the Commission's attention on remand.

17. Recently, in February 2014, the Minority Media & Telecom Council (MMTC) filed a white paper with the Commission making nine recommendations to facilitate the participation of minority- and women-owned businesses in upcoming auctions. Listed first among these is the repeal of the AMR rule. MMTC argues that the rule impedes the ability of small entities to become providers of spectrum-based service, explaining that wholesaling and leasing arrangements are important vehicles for small and minority-owned businesses to build and efficiently use capital.

18. MMTC's White Paper argues that ''over the course of fifty-six wireless auctions during the past 20 years, the majority of DEs that currently hold wireless licenses are incumbent rural telephone companies, very few DEs are new entrants, and even fewer DEs are (minority-owned business enterprises) MBEs.'' MMTC and its supporters maintain that DE participation in spectrum auctions dramatically decreased after the Commission's adoption of its 2006 rule modifications and claim that the results from Auctions 66 and 73 ''showed a precipitous drop in DE participation from the average 70% value of winning bids over previous years, to only 4.0% and 2.6% respectively.''

19. Other parties concur with MMTC's concerns about the AMR rule, arguing that the development of the Commission's rules and policies over the last decade, including adoption of the AMR rule, have significantly hindered their ability to access capital and largely impeded their ability to acquire and use wireless spectrum licenses in today's wireless marketplace. Parties claim that the AMR rule creates insurmountable obstacles for new and existing small businesses to gain access to capital in secondary markets where they argue small businesses can play important roles in assuring that licensed spectrum is effectively and efficiently utilized. In a March 2014 request for clarification or waiver of the AMR rule, Grain Management, LLC described how the rule could prevent a small, minority-owned, new-entrant lessor of spectrum capacity on licenses acquired without DE benefits from being eligible for such benefits in future auctions. *See Grain Management, LLC's Request for*

Clarification or Waiver of 47 CFR 1.2110(b)(3)(iv)(A); Implementation of the Commercial Spectrum Enhancement Act and Modernization of the Commission's Competitive Bidding Rules and Procedures; Expanding the Economic and Innovation Opportunities of Spectrum Through Incentive Auctions; Amendment of the Commission's Rules with Regard to Commercial Operations in the 1695–1710 MHz, 1755–1780 MHz, and 2155–2180 MHz Bands, WT Docket No. 05–211; GN Docket Nos. 12–268 and 13–185, *Order,* 29 FCC Rcd 9080 (2014).

20. *Discussion.* The Commission concludes that it is appropriate to revisit its small business eligibility rules and evaluate whether to rebalance its competing goals in order to provide small businesses additional opportunities to gain access to new sources of capital necessary for participation in the provision of spectrum-based services in today's marketplace, while guarding against unjust enrichment of ineligible entities. Chief among the actions that the Commission takes in the *Competitive Bidding NPRM* is its proposal to repeal the AMR rule and to re-examine the related decade-old policy underlying it. In lieu of the bright-line test of the AMR rule, the Commission proposes a two-pronged approach to evaluate an entity's eligibility for small business benefits. This approach would use its existing controlling interest and affiliation standards to determine what revenues are attributable to an applicant based upon a rigorous review of all relevant relationships and agreements, which will ensure that the small business makes independent decisions about its business operation. Alternatively, the Commission also seeks comment on whether it should retain the policy but modify the AMR rule with some other attribution threshold to determine an applicant's eligibility for small business benefits.

21. Using long standing principles of control and affiliation, the Commission proposes to safeguard small business benefits by attributing the revenues of any entity that has the ability to control, or potentially control, an applicant's business venture. The Commission's existing attribution rules examine the extent to which a small business may combine its efforts, property, money, skill and knowledge with another. Further, where there is an agreement to share profits/losses proportionate to each party's contribution to the business operation, the existing rules consider these issues as a factor in whether to attribute that party to the applicant as its affiliate. Because the Commission's proposals should allow small businesses greater flexibility to engage in business ventures that include increased forms of leasing and other spectrum use arrangements, the Commission anticipates that the combined effect of the proposals—by allowing a small business greater flexibility to adopt a more individualized business model for each license it holds—should increase the potential sources of revenue for the small business and potentially decrease the likelihood that it would be subject to undue influence by any particular user of a single license. The Commission's proposed approach would also ensure that a licensee retains control of all licenses for which it seeks bidding credits, while providing greater flexibility in potential uses for any licenses acquired without such benefits. The Commission seeks comment on this proposal and asks commenters to specifically address how and why a small business may be more or less likely to be subject to undue influence by a user of its spectrum under this approach. Additionally, the Commission proposes to modify the language of 47 CFR 1.9020 to make clear how the secondary market rules apply to DE lessors, which should provide greater flexibility to small businesses in how they choose to use their spectrum. The Commission also seeks comment on whether any corresponding changes may be warranted in its unjust enrichment rules to ensure that small business bidding credits are extended only to qualifying small businesses.

22. The AMR rule and the policy that spurred its adoption were intended to prevent unjust enrichment by establishing safeguards to ensure that entities ineligible for small business incentives could not circumvent the Commission's rules by obtaining those benefits indirectly, through their relationships with eligible entities. The Commission based its decisions, in large measure, on legislative history suggesting that anti-trafficking restrictions and unjust enrichment payment obligations were needed to deter participation in the licensing process by those who have no intention of offering service to the public. For example, in the *Secondary Markets Second Report and Order,* the Commission relied on the legislative history in rejecting a commenter's argument that ''[t]here [was] no reason to believe that Congress intended to limit designated entities to only one form of participation in the spectrum market—construction and operation of a facilities-based network.'' In adopting the AMR rule, the Commission reaffirmed that interpretation of the legislative history, concluding that the adoption of the AMR rule, along with other modifications, was necessary to strengthen its implementation of Congress's directives with regard to DEs and to ensure that, in accordance with the intent of Congress, every recipient of its DE benefits is an entity that uses its licenses to directly provide facilities-based telecommunications services for the benefit of the public.

23. Yet, in the Commission's attempts to safeguard small business benefits from unjust enrichment, it appears that the Commission's policy and corresponding rule modifications may have had the unintended consequence of hindering the Commission's ability to satisfy its statutory goal of promoting opportunities for wireless entry by small businesses. Moreover, the Commission notes that the statute does not specifically state, nor does the House Report make clear, that Congress intended to require that ''offering service to the public'' be defined only as DEs directly providing facilities-based telecommunications services for the benefit of the public. The Commission may have placed undue weight on language from the House Report, given all of the various factors that the actual text of 47 CFR 309(j) gives the Commission the discretion to balance. In interpreting statutes, analysis of the statutory text, aided by established principles of interpretation, controls.

24. While the policy of requiring primarily the direct provision of facilities-based service by a small business seeking bidding credits is one way to protect against unjust enrichment, the Commission tentatively concludes that it is not the only way to ensure that benefits are provided solely to those entities that Congress intended. The Commission also recognizes that the AMR rule, which was adopted to further that policy, may inhibit the highest and best use of spectrum by preventing small businesses that lack access to traditional sources of capital from being able to acquire alternative revenue streams through leasing and other spectrum use arrangements, even in circumstances where they retain control over their business venture. MMTC argues that there has been a documented decline in DE participation and success at auction following the adoption of the Commission's rule changes in 2006, based on the relative value of licenses won by DEs compared to non-DEs. While the Commission notes that the relative value of licenses won at auction is only one measure to gauge success of the small business program and that there are other

relevant factors to consider in assessing whether the Commission has met its statutory obligations for small businesses, the Commission nonetheless concurs that over the last decade small businesses have faced various increased difficulties in becoming wireless licensees.

25. The Commission contemplates that a different approach may be more effective in balancing its competing goals of affording small businesses reasonable flexibility to obtain the capital necessary to participate in the provision of spectrum-based services and effectively preventing the unjust enrichment of ineligible entities. Inasmuch as Congress has granted the Commission the discretion to weigh the varying objectives of section 309(j), the Commission proposes rule modifications that, if adopted, could offer a more balanced approach for achieving its statutory directives. The Commission therefore proposes to repeal the AMR rule and evaluate small business eligibility in a manner that could provide DEs with greater opportunities to participate in the provision of spectrum-based services, including through secondary market transactions. The Commission anticipates that this, in turn, will help DEs gain access to capital by enabling leasing and other spectrum use arrangements. Allowing more DEs and small businesses to participate in spectrum leases and other spectrum use agreements will also promote the Commission's goals of promoting more efficient and dynamic use of the important spectrum resource through secondary market spectrum transactions.

26. The Commission seeks comment on this proposal to repeal the AMR rule, and its tentative conclusions regarding its need to re-evaluate its small business policy. Should the Commission discontinue its policy requiring small businesses seeking bidding credits to provide primarily direct, facilities-based service on each individual license? Would this proposal better promote Congress's intent for small businesses? Would the proposal to eliminate this policy and to repeal the AMR rule have the unintended effect of providing ineligible entities with access to discounted spectrum?

27. In a mature wireless industry where leasing and other spectrum use arrangements may be important tools to enable wireless providers to raise capital and participate at auction, is it appropriate to provide small businesses seeking bidding credits with greater flexibility to enter into such spectrum use arrangements? Should the Commission consider an alternative spectrum capacity use limit for a bright-line attribution test, and if so what is the appropriate percentage and what spectrum use arrangements should it include? Would eliminating the policy that small businesses provide primarily facilities-based service with each individual license increase or decrease the risk of unjust enrichment to ineligible entities and/or the warehousing of spectrum? What safeguards should the Commission consider to ensure that bidding credits are extended only to qualifying small businesses, as Congress intended? Alternatively, should the Commission retain the AMR rule and the related policy that small businesses primarily provide facilities-based service, but stipulate that neither would kick in for a set number of years? This approach might provide small businesses with an opportunity to raise capital early in the license term but still require that they eventually become primarily facilities-based providers of service when the AMR rule kicks in. Commenters should address when the AMR rule and the related policy regarding facilities-based service should kick in and how construction build-out requirements should be measured. Commenters should also address whether the Commission's proposed shift in policy would continue to allow auctions to award licenses to those entities that value the spectrum most highly, which fosters the Commission's ability to accomplish Congress's multi-faceted policy objectives. Will rebalancing the Commission's approach to Congress's goals provide adequate safeguards against unjust enrichment to ensure that bidding credits are awarded only to qualifying small businesses?

28. *Proposed Standard for Evaluating Small Business Eligibility.* The Commission proposes a more focused approach to evaluate small business eligibility that looks at who controls, or has the potential to control, the applicant and any spectrum acquired with the use of small business benefits. Specifically, the Commission proposes to apply a two-pronged test using its existing controlling interest and affiliation rules to determine: (1) Whether an applicant meets the applicable small business size standard, and (2) whether it retains control over the spectrum associated with the licenses for which it seeks small business benefits. This approach will allow the Commission to separate its review of those who control, or have the power to control, the small business applicant's business venture, and are therefore attributable for purposes of determining eligibility, from those that use (and may control) its spectrum capacity, which would affect the small business's ability to retain its benefits with respect to any particular license. Consistent with the Commission's existing controlling interest and affiliation rules under 47 CFR 1.2110(c)(2)(ii)(H)–(I), it will attribute the revenues of those entities or individuals that determine or significantly influence the nature or types of services offered by the small business, the terms upon which such services are offered, and the prices charged for such services. The Commission's proposals would expand the types of services the small business might offer as part of its overall business venture, but would not alter how the Commission carefully monitors those that have the ability to control, or potentially control, the applicant or licensee and its business venture. The Commission seeks comment on these specific proposals.

29. The first prong would evaluate whether an applicant meets the applicable small business size standard and is therefore eligible for benefits. To evaluate small business eligibility, the Commission proposes to apply its existing controlling interest standard and affiliation rules to determine whether an entity should be attributable based on whether that entity has *de jure* or *de facto* control of, or is affiliated with, the applicant's overall business venture. *De jure* control is typically evidenced by the holding of greater than 50 percent of the voting stock of a corporation or, in the case of a partnership, general partnership interests. *De facto* control is determined on a case-by-case basis to determine whether the licensee has actual control over its business venture. Thus, pursuant to 47 CFR 1.2110 and consistent with the Commission's current analysis, under its proposal, control and affiliation may arise through, among other things, ownership interests, voting interests, or the terms of any agreements that create a controlling, or potentially controlling, relationship over the applicant's business venture. The Commission therefore notes that its proposal to eliminate the policy that small businesses seeking benefits primarily provide facilities-based service does not alter the rules that require it to consider whether facilities-sharing and other agreements confer control of or create affiliation with the applicant. The proposal also does not alter the general standard by which the Commission

evaluates whether a licensee has ceded *de facto* control and effected an unauthorized transfer of control of its spectrum authorization to a third party.

30. The Commission's continued careful and targeted examination of these issues will allow it to ensure that a small business applicant has the independent ability to direct its decision making regarding its overall business venture and how its licenses are used to offer service to the public. Moreover, those claiming small business benefits will continue to be bound by the Commission's existing rules regarding control and attribution, which should be familiar to all existing and future Commission licensees. By providing small businesses with greater opportunities to access revenue streams through leasing and other spectrum use agreements, the Commission anticipates that they will have more flexibility to employ business models that suit their individual needs and therefore will be less likely to be influenced by deep-pocketed investors or parties with which they have a spectrum use agreement. Furthermore, this approach recognizes the Commission's earlier conclusion in the *Secondary Markets* proceeding that the mere existence of a spectrum use agreement between a small business and another party does not, without more, cause the other party to become an attributable interest holder in the applicant. This approach, coupled with the Commission's proposed departure from the policy of requiring small businesses to provide primarily facilities-based service directly to the public with each of its licenses, should allow small businesses to gain access to capital and better enable them to participate in auctions and in the provision of spectrum-based services, so long as the terms of any spectrum use agreement do not confer control or create an affiliation that would lead to attribution of disqualifying revenues. Will this approach promote long-term investment, market participation and competition in the wireless industry by small businesses?

31. Once the first prong has been met, the Commission would evaluate eligibility under the second prong. Under the second prong, the Commission proposes to determine an entity's eligibility to retain small business benefits on a license-by-license basis, based on whether the entity has maintained *de jure* and *de facto* control of the license. Under this proposed license-by-license approach, an entity will not necessarily lose its eligibility for all current and future small business benefits solely because of a decision associated with any particular license. Instead, while a small business might incur unjust enrichment obligations if it relinquishes *de jure* or *de facto* control of any particular license for which it claimed benefits, so long as the revenues of its attributable interest holders (i.e., the DE's affiliates, its controlling interests, and the affiliates of its controlling interests) continue to qualify under the relevant small business size standard, it could still retain its eligibility to retain current and future benefits on existing and future licenses. In other words, an applicant need not be eligible for small business benefits on each of the licenses it holds in order to demonstrate its overall eligibility for such benefits. For instance, if a small business chooses to permissibly relinquish benefits, incurring any applicable unjust enrichment obligation, and transfer *de facto* control of a license through a *de facto* transfer lease, that lease will not necessarily make the lessee an attributable interest holder in the applicant or cause the applicant to become ineligible for other small business benefits it might have or want to acquire.

32. The Commission stresses that small businesses, like all its licensees, remain subject to its rules to prevent unauthorized transfers of control of their license authorizations pursuant to section 310(d) of the Act. Accordingly, if a small business seeking benefits executes a spectrum use agreement that does not comply with the Commission's relevant standard of *de facto* control, it will be subject to unjust enrichment obligations for the benefits associated with that particular license. If the terms of that spectrum use agreement go so far as to confer control of, or the potential to control, the small business's overall business venture, the business could risk the attribution of revenues, which could render it ineligible for all current and future small business benefits on all licenses. Except where the leasing standard of *de facto* control applies under the secondary market rules, the criteria of *Intermountain Microwave* and *Ellis Thompson* will continue to apply to any Commission licensee, including a small business, for purposes of assessing whether it can demonstrate that it retains *de facto* control of its business venture and spectrum authorization. *See Applications for Microwave Transfers to Teleprompter Approved with Warning; Non-broadcast and General Action Report No. 1142, Public Notice (by the Commission en banc),* 12 FCC 2d 559, 559–60 (1963) (*Intermountain Microwave*); *Ellis Thompson Corporation,* 60 FR 1776, Jan. 5, 1995. Small businesses will, however, be free under this proposal from the added policy requirement regarding the extent to which it must use each individual spectrum license for the provision of facilities-based service in order to retain eligibility for small business benefits.

33. The Commission seeks comment on its proposed two-pronged approach to evaluate attribution and establish eligibility for small business benefits. Will this proposal provide small businesses with the flexibility necessary to participate in an evolving wireless marketplace? Does the absence of a bright-line attribution standard hinder an applicant's ability to assess its eligibility for small business benefits? Will the Commission's proposed approach allow it to safeguard the benefits it awards and prevent ineligible entities from obtaining benefits indirectly, through arrangements with eligible small businesses? Should the Commission take additional steps to assure that ineligible entities cannot exercise undue influence over a small business, or will its proposed approach empower small businesses to make their own decisions with respect to the highest and best use of each of their licenses without risking the undue influence of their investors or spectrum users? For instance, should the Commission, in considering whether the user's revenues should be attributable to the small business applicant, consider any limits on the amount of its spectrum capacity a small business seeking benefits can allow a third party to use, even where such use is otherwise permissible under Commission rules and the agreement on its own does not create a controlling interest or affiliation in the applicant's business venture?

34. Should the Commission limit the ability of a small business seeking benefits to lease all of its spectrum capacity or should the Commission allow it to be primarily engaged in the business of leasing provided that it complies with small business eligibility rules? Would allowing a small business seeking benefits to lease 100 percent of its spectrum capacity on any individual license, and/or on all of its licenses, increase the potential of the unjust enrichment of ineligible entities? Commenters should address how that risk increases or decreases based on the amount of spectrum capacity that may be leased. Should the Commission be concerned that a small business leasing large quantities of its spectrum capacity to a single user has allowed another entity to receive the benefit of its bidding credits?

35. Should there be a standard by which the Commission should automatically attribute the gross revenues of an entity with which a small business seeking benefits has spectrum use agreements if it has such agreements with a single entity in numerous markets? How should the Commission view small businesses that have multiple financial and/or operational arrangements with another licensee or entity where the agreements do not otherwise create a controlling interest or affiliation with the small business? Should the existence of such multiple agreements create a rebuttable presumption of affiliation similar to the kinship affiliation rule, or does the Commission's existing rule of ''affiliation through contractual relationships'' already adequately guard against a third party acquiring control, or the potential to control, the small business through such agreements? For instance, should the Commission permit a small business seeking benefits to have a combination of capital investments, loan, marketing, management and leasing agreements with another Commission licensee without attributing the gross revenues of that entity to the small business? Is there a combination of agreements that should cause more concern in assessing small business benefit eligibility, and should any combination of agreements with a single party create a rebuttable presumption of attribution or an ineligibility for small business benefits? Are there any specific types of agreements that are more likely to confer control or undue influence of the small business seeking benefits that should cause the Commission to automatically attribute the gross revenues of the entity to the small business or render the small business ineligible for benefits?

36. Do the Commission's proposals provide small business applicants with sufficient flexibility to access capital, compete in auctions, and participate in new and innovative ways in the provision of service in the wireless marketplace while retaining their benefits? Do the Commission's proposals make it more or less likely that a small business will be unduly influenced by the entities with which it engages in spectrum use agreements? Commenters opposing these proposals should indicate specific concerns. Commenters supporting these proposals should offer any other suggestions the Commission should consider to revise its rules and reform its small business policies. To what extent do the Commission's proposed changes for small business eligibility positively or negatively affect auction revenues? To what extent do the Commission's proposals appropriately balance its competing statutory obligations in section 309(j) of the Act?

37. *Proposed Standard for Evaluating DE Leasing.* The Commission also proposes to modify the language of 47 CFR 1.9020 to comport with the Commission's proposed approach to assessing small business eligibility. Specifically, the Commission proposes to make clear that DEs may fully benefit from the same *de facto* control standard for spectrum manager leasing in the Commission's secondary market rules as non-DE lessors.

38. In developing its regulatory scheme for leasing generally, the Commission determined that section 310(d) of the Act did not require the continued application of the facilities-based *Intermountain Microwave* six-part test that had, since 1963, been applied to determine whether a licensee was exercising the requisite level of *de facto* control over its licensed operations. Instead, the Commission adopted a revised *de facto* control standard for leasing arrangements for purposes of applying the requirements of section 310(d). Under the revised standard, a spectrum manager lease does not constitute a transfer of *de facto* control so long as the licensee (1) maintains an active, ongoing oversight role in ensuring that the lessee complies with Commission rules and policies; (2) retains responsibility for all interactions with the Commission required under the license related to the use of the leased spectrum; and (3) remains primarily and directly accountable to the Commission for any lessee violation of these policies and rules.

39. While the Commission nominally applied the new standard to all licensees, it explained that DEs would be required to retain their eligibility under the traditional facilities-focused *de facto* control standard of 47 CFR 1.2110 and *Intermountain Microwave*. Thus, the Commission stated that small businesses could engage in leasing only to the extent that doing so would not affect their eligibility for benefits. Further, it required that a licensee receiving DE benefits be an entity that actually provides service under the license. As explained above, the Commission expressed concern that unless it continued to require DEs to remain engaged primarily in the provision of facilities-based services to the public it would run the risk that small business incentives, particularly bidding credits, would indirectly benefit entities that would not qualify for those incentives in the primary market. To that end, the Commission specified that small businesses could not retain their benefits if they made spectrum leasing their primary business.

40. Consistent with the Commission's proposed revisions to assessing small business eligibility, including the elimination of the requirement that small businesses primarily provide facilities-based service on each license they hold, the Commission proposes a modification to its spectrum manager leasing rule. Specifically, the Commission proposes to modify the language in 47 CFR 1.9020(d)(4) to remove the conflicting reference to the control standard of 47 CFR 1.2110 in order to make clear that small business lessors are fully subject to the same *de facto* control standard for spectrum manager leasing that applies to all other licensees. This modification should clarify that 47 CFR 1.9010 alone defines whether a licensee, including a small business, retains *de facto* control of the spectrum that it leases to a spectrum lessee in the context of spectrum manager leasing. This proposal does not alter the fact that small businesses must remain eligible for benefits under 47 CFR 1.2110. Instead, the proposed modification clarifies that one *de facto* standard applies to determine whether the licensee has *de facto* control of the spectrum in the context of a spectrum manager lease (i.e., 47 CFR 1.9010), and the other applies to determine whether a third party has control, or the potential to control, the licensee and its business venture for the purposes of attribution of revenues (i.e., 47 CFR 1.2110). In sum, the Commission's proposal departs from the traditional *Intermountain Microwave* facilities-focused *de facto* control standard with regard to an individual spectrum lease agreement for a particular license. As long as the small business: (1) Maintains an active, ongoing oversight role in ensuring that the lessee complies with Commission rules and policies; (2) retains responsibility for all interactions with the Commission required under the license related to the use of the leased spectrum; and (3) remains primarily and directly accountable to the Commission for any lessee violation of these policies and rules, it will be considered to maintain *de facto* control of its spectrum for the purposes of that spectrum manager lease. Spectrum manager leasing applications will continue to be evaluated to determine whether control of, or affiliation with, the small business applicant and its overall business venture has arisen through any the terms of the leasing

agreement that might lead to attribution and result in unjust enrichment under 47 CFR 1.2110.

41. When the Commission adopted 47 CFR 1.9010, it noted that a licensee's continued control over the licensed use of spectrum lies at the heart of what it means to retain the license and the rights thereunder and that it could no longer generally assume that the licensee must perform the non-licensed activities identified in *Intermountain Microwave* in order to conclude that the licensee has retained its license and all rights thereunder. The Commission proposes that its modification will make clear that this conclusion applies equally to all licensees. Are there any reasons why the Commission should retain its existing language in 47 CFR 1.9020(d)(4)? Should the Commission consider limiting the amount of spectrum a small business can lease to a single entity under 47 CFR 1.9020, in order to ensure that the small business retains control over its business venture as required in 47 CFR 1.2110? Commenters opposing the Commission's proposal should offer alternative suggestions for how it could allow small businesses to play a larger role in secondary market transactions.

B. Unjust Enrichment

42. The integrity of the small business benefit program depends on ensuring that only entities eligible for benefits receive them. To safeguard against abuse, the Commission has long relied on unjust enrichment provisions, which require a small business to pay back the benefits it accrued where appropriate, and careful vigilance in approving applications and transactions. With the proposals set forth in the *Competitive Bidding NPRM,* the Commission anticipates that these provisions will be as important as ever and that strong enforcement of the provisions is critical. The Commission therefore seeks comment on whether any changes are appropriate to strengthen its unjust enrichment rules and how best the Commission can continue to scrutinize applications and proposed transactions to ensure that only eligible entities receive benefits, while not undermining the Act's directive to ensure that DEs are given the opportunity to participate in the provision of spectrum-based services.

43. Pursuant to 47 CFR 1.2111(b), small businesses are obligated to make unjust enrichment payments if they seek, *inter alia,* to assign or transfer control of licenses to a non-eligible party, for a period of up to five years from the initial issuance of the license. In rebalancing the Commission's policy objectives to provide small businesses greater opportunities to participate at auction and in the provision of spectrum-based services, it remains focused on its responsibility to ensure that benefits are provided only to qualifying entities.

44. The Commission therefore invites comment on whether its existing five year unjust enrichment payment schedule continues to provide a sufficient safeguard to ensure that benefits are provided only to qualifying entities. Commenters should be specific about whether there is a need to adjust its current five year unjust enrichment repayment schedule, and the appropriate length and reimbursement percentages for any repayment schedule revisions. If commenters support a different repayment period or different percentages for the repayment schedule, they should be specific about why their suggested approach would better meet its goals and balance the Commission's statutory objectives.

45. Specifically, the Commission also seeks comment on whether it should consider adopting a 10 year unjust enrichment repayment schedule for licenses acquired with bidding credits, including its benefits and costs. Extending the length of the unjust enrichment repayment schedule to 10 years may help deter speculation and prevent spectrum warehousing. At the same time, extending the length of the unjust enrichment repayment schedule could restrict small businesses' access to capital, which could limit their ability to participate in the provision of spectrum-based services, contrary to the Commission's underlying goals in this proceeding. How does the length of the repayment schedule affect a small business's capital fundraising and business planning efforts? Are there lessons the Commission can draw from based on parties' experience raising capital when the 10 year unjust enrichment period was in place from 2006 until 2010? If the Commission repeals the AMR rule as proposed and also modifies the unjust enrichment rules, what would be the combined effect on the ability of a small business to raise capital and participate at auction and in the provision of service, particularly when compared to the existing rule?

46. Are there other unjust enrichment provisions that the Commission should consider? For example, should the Commission require full reimbursement, plus interest, if a small business loses its eligibility prior to meeting the construction requirements applicable at the end of the license term? Commenters should discuss how such an approach would impact the Commission's interest in protecting against unjust enrichment, while ensuring that small businesses have access to capital to participate at auction and in the provision of service. Is a different reimbursement percentage (something less than 100 percent) preferable? Are other safeguards sufficient to protect the Commission's interests regarding unjust enrichment?

47. The Commission seeks comment on whether it may grant small businesses greater flexibility to participate in the provision of spectrum-based services, as it has proposed, while also ensuring that only those entities Congress intended have access to benefits. The Commission asks commenters to address how the unjust enrichment rules affect their ability to secure and retain capital and whether its rules require other further modifications to safeguard the award of small business benefits. By granting small businesses greater regulatory flexibility to demonstrate eligibility, does the Commission increase or decrease the likelihood that non-eligible entities can assert undue influence over a small business's decision making for its business venture and its utilization of licenses to participate in the provision of spectrum-based services?

48. The Commission also seeks comment on how other government programs ensure that only an intended class of recipients receive benefits that are awarded to eligible entities. Are there other government programs that have greater safeguards than the Commission currently employs? How do other government agencies and small business benefit programs prevent abuse and guard against unjust enrichment of ineligible entities? Commenters should be specific about any analogies that can be drawn between the Commission's small business benefits and similar benefits awarded by other agencies and programs.

49. The Commission's efforts to provide increased flexibility to small businesses must be balanced with vigilant enforcement to ensure that only *bona fide* small businesses receive benefits. The Commission has a strong interest in ensuring that truthful and accurate information is available to the Commission and the public for purposes of implementing and enforcing policies it finds to be in the public interest. Such information is imperative to the Commission's ability to safeguard the benefits it awards and to prevent unjust enrichment. To the extent the Commission modifies rules regarding its small business benefits, it will remain vigilant in undertaking careful review of

all applications of those seeking to acquire or retain bidding credits to ensure that the gross revenues of all parties that control, or have the potential to control, the applicant are properly attributed in compliance with its controlling interest and affiliation rules. The Commission emphasizes that it will remain focused on ensuring that an applicant's certifications for eligibility comport with the actual terms of its agreements with relevant parties. In so doing, the Commission expects that it can properly execute its statutory responsibility to continue to prevent unjust enrichment of ineligible entities.

C. Bidding Credits

50. The Commission also takes a fresh look at the primary way that it facilitates participation by small businesses at auction through its bidding credit program. The Commission notes that the generally applicable small business definitions and corresponding bidding preferences were adopted in 1997 and finds that it is appropriate to revisit whether these standards have kept pace with an evolving wireless marketplace. Toward that end, the Commission proposes to increase the general size standards, measured by gross revenues, for purposes of determining an entity's eligibility for a bidding preference. The Commission also proposes to continue its practice of evaluating which small business definitions will apply on a service-by-service basis, based upon associated capital requirements for a particular service. In addition, the Commission seeks comment on whether to increase the bidding credit percentages applicable to associated small business categories. Finally, the Commission seeks comment on its ability to consider bidding preferences for other types of DEs, entities that serve unserved/underserved areas or areas with persistent poverty, as well as persons and entities that have overcome disadvantages. The Commission expects that the questions raised here will provide a meaningful opportunity to evaluate whether its bidding credit program continues to achieve its objectives. The Commission seeks concrete, specific, data-driven feedback by commenters to facilitate its review. The Commission invites commenters to suggest other creative ideas that would promote its statutory objectives, but it emphasizes that for any such proposals it is imperative to provide ample supporting evidence.

51. An auction applicant may claim eligibility for a bidding credit when filing a short-form application. The Commission's short-form application is the first part of its two-phased auction application process. In the first phase, any party desiring to participate in an auction must file a streamlined short-form application in which it certifies under penalty of perjury as to its qualifications to participate in a Commission auction. In its review of the short-form applications, Commission staff presume the information and certifications contained in the short-form applications are true unless they are incomplete, internally inconsistent or contradicted by information in the Commission's records. Eligibility to participate in bidding is based on information in an applicant's short-form application and its certifications, and on its upfront payment. In the second phase of the Commission's application process, a winning bidder files a more comprehensive long-form (FCC Form 601) application. The long-form application is subject to more extensive review and is the basis for any determination that a winning bidder is qualified to hold a Commission license and for the award of any claimed bidding credit.

1. Small Business Bidding Credits

52. *Background.* Bidding credits operate as a percentage discount on the winning bid amounts of a qualifying small business. By making the acquisition of spectrum licenses more affordable for new and existing small businesses, bidding credits facilitate their access to needed capital. The Commission establishes eligibility for bidding credits for each auctionable service, adopting one or more definitions of the small businesses that will be eligible. The Commission's small business definitions have been based on an applicant's average annual gross revenues over a three-year period. In establishing the gross revenues thresholds for the small business definitions to be applied to a specific service, the Commission takes into account the capital requirements and other characteristics of the particular service. In order to qualify for a small business bidding credit an applicant must demonstrate that its gross revenues, in combination with those of its ''attributable'' interest holders, fall below the applicable financial caps.

53. The Commission's rules provide a schedule of small business definitions and corresponding bidding credits. In adopting bidding credits for a particular service, the Commission has found that the use of the small business size standards and credits set forth in the part 1 schedule provides consistency and predictability for small businesses. Section 1.2110(f) sets forth three tiers of bidding credits: (1) A 35 percent bidding credit for businesses with average annual gross revenues for the preceding three years not exceeding $3 million; (2) A 25 percent bidding credit for businesses with average annual gross revenues for the preceding three years not exceeding $15 million; and (3) A 15 percent bidding credit for businesses with average annual gross revenues for the preceding three years not exceeding $40 million.

54. *Discussion.* The Commission proposes to increase the gross revenues thresholds defining the three tiers of small businesses in the part 1 schedule by which the Commission provides the corresponding available bidding credits and seeks comment on alternatives. The Commission also proposes to continue its practice of deciding which small business definitions will apply on a service-by-service basis depending on the capital requirements of the particular spectrum to be auctioned. In addition, the Commission seeks comment on whether the bidding credit percentages that apply to these small business definitions should be increased.

55. Since the inception of the Commission's DE program, and particularly in the past decade, the evolution of the mobile wireless marketplace from mobile voice to mobile broadband has increased the demands on wireless networks and the need for access to spectrum, heightening the capital-intensive nature of the industry. Moreover, the number of small and regional mobile wireless service providers has significantly decreased, though regional and local service providers continue to offer consumers additional choices in the areas they serve. In light of these changes and statutory goals, the Commission seeks comment on how it should reconsider definitions of what constitutes a small business in the wireless industry.

56. The Commission proposes to increase the gross revenues thresholds in its part 1 schedule to reflect the changing nature of the wireless industry, including the overall increase in the size of wireless networks and the increase in capital costs to deploy them. The Commission notes that these changes have resulted in an increase in the size of the wireless service providers that can be considered to be ''small'' relative to the large nationwide providers. By proposing adjustments to the Commission's small business size standards, it aims to promote the effective participation of small businesses in auctions and in the provision of spectrum-based services.

57. In considering how much to adjust the gross revenues thresholds, the

Commission proposes to use the price index for the U.S. Gross Domestic Product (GDP price index) published by the U.S. Department of Commerce (Commerce). The Commission notes that the SBA, as part of its size standards review, recently used the GDP price index to adjust its receipts-based industry size standards. In particular, the Commission proposes to adjust the current gross revenues thresholds with the percentage change in the GDP price index between 1997 and 2013. The indices are available on Commerce's Bureau of Economic Analysis Web site, under Tables 1.1.4 and 1.1.15, at *http://www.bea.gov/itable*.

58. The Commission believes that the GDP price index may reflect certain industry trends and a relevant range of economic activity better than the available wireless industry price indices published by the Bureau of Labor and Statistics (BLS). In barely a decade, the shift from a voice-centric to a data-centric wireless industry has seen mobile broadband data services grow from their nascent stage to become a significant share of the industry's market revenues. However, the available wireless industry price indices may under represent broadband data services because the indices are based on voice-centric definitions of service plans. Moreover, broadband data plans are not treated as a separate category in the indices, and the BLS description of the indices is unclear about how the advent of mobile broadband services has been factored into the voice-centric consumer and producer prices indices that were introduced in 1997 and 1999, respectively. Furthermore, the wireless industry consumer and producer price indices may exclude goods and inputs that are relevant for the range of economic activity involved in the provision of wireless services. Therefore, the Commission proposes to use the broader GDP price index. The GDP price index increased by 36.4 percent from 1997 to 2013. Based on this 36.4 percent increase, the Commission proposes new gross revenues thresholds that are obtained by multiplying the current thresholds by 1.364 and rounding to the nearest million. Specifically, the Commission proposes to revise the standardized schedule in 47 CFR 1.2110(f) as follows: (1) Businesses with average annual gross revenues for the preceding three years not exceeding $4 million would be eligible for a 35 percent bidding credit; (2) Businesses with average annual gross revenues for the preceding three years not exceeding $20 million would be eligible for a 25 percent bidding credit; and (3) Businesses with average annual gross revenues for the preceding three years not exceeding $55 million would be eligible for a 15 percent bidding credit.

59. The Commission seeks comment on its proposal to adjust the current gross revenues thresholds in its small business size standards using the GDP price index. Is there a different price index that better reflects industry developments and the relevant range of economic activity? Is there an alternative method for setting new gross revenues thresholds that does not require adjusting the current gross revenues thresholds with a price index?

60. The Commission tentatively concludes that its proposed gross revenues thresholds better reflect the larger size of wireless networks today, and thus expect that they will preserve the effectiveness of the Commission's bidding credit program in the current mobile wireless marketplace. Consumer demand for widely available mobile broadband services has increased providers' need for additional capital to acquire spectrum and deploy service. This trend is reflected in the changing structure of the industry. By increasing the gross revenues thresholds that define small businesses and thereby making bidding credits available to a larger number of entities, the Commission seeks to facilitate a higher rate of participation by entities that might otherwise find it difficult to obtain the necessary capital to participate at auction. The Commission seeks comment on whether the proposed increases in the revenues thresholds are likely to increase the percentage of entities that will benefit from its small business bidding credits, by providing better access to capital and enabling them to seek access to the spectrum necessary to meet consumer demand for mobile broadband services. At the same time, to further the statutory objectives of the auction program, the Commission must adopt revenues thresholds that will avoid including firms that have adequate access to financing for spectrum based on their revenue levels. The Commission therefore seeks to avoid setting eligibility for bidding credits at a level that is over inclusive, which would defeat the purpose of the bidding credits and undermine the statutory objectives of the program. Any new thresholds the Commission adopts should provide economic opportunity to small businesses, while maintaining good economic incentives for small businesses to seek diverse forms of financing for spectrum.

61. The Commission seeks comment on this proposal. Specifically, how have capital costs, construction costs, and administrative costs faced by wireless providers changed since the mid-1990s? Have the costs of spectrum usage rights increased significantly since the early stages of the Commission's auction program such that it is more difficult for small businesses to acquire wireless spectrum today?

62. Commenters who agree that the industry's evolution warrants new definitions for small businesses should discuss what gross revenues thresholds are appropriate for defining small businesses in the wireless context. Commenters should explain their methodologies for deriving alternative thresholds and should supply supporting data or justifications for the Commission's use in evaluating and applying such methodologies. If commenters do not provide data on wireless providers' gross revenues, what alternative factors should the Commission consider in determining what constitutes a ''small business'' in today's wireless marketplace?

63. The Commission also seeks comment on whether to adopt a small business size standard based on criteria other than gross revenues. As the Commission recently noted in the AWS–3 proceeding, in first adopting gross revenues-based small business size standards for eligibility for DE benefits, the Commission rejected the SBA's employee-based business size standard for cellular or other wireless telecommunications entities as a means to qualify as a DE. The Commission concluded that such a definition would be too inclusive and would allow many large telecommunications firms to take advantage of preferences not intended for them. The Commission notes that according to census data, if it adopted the SBA's small business employee-based size standard for cellular or other wireless telecommunications entities (i.e., 1,500 or fewer employees) more than 96 percent of wireless companies would be considered small businesses. The Commission therefore tentatively concludes not to reconsider its conclusion that the SBA's employee-based definition is too inclusive for the purposes of establishing DE eligibility.

64. In addition, the Commission asks commenters to consider whether it should increase the bidding credit percentages (i.e., discount amounts) currently available to small businesses in 47 CFR 1.2110(f). Should the Commission use the existing bidding credit percentages, but apply them to higher gross revenues thresholds? Should the Commission add additional

small business definitions and associated tiers of bidding credits above or below the tiers proposed above? Commenters supporting additional tiers of bidding credits should propose a corresponding gross revenues threshold for each additional tier. Commenters supporting changes to the existing bidding credit percentages in the Commission's part 1 rules should explain the basis for their proposals and provide any supporting data for the Commission's use in evaluating potential changes to the part 1 schedule. Commenters should also address whether increases in the bidding credit percentages are necessary if the Commission adopts its proposal to modify the gross revenues thresholds for its small business definitions since that will have the effect of increasing the level of bidding credit a substantial number of small businesses would receive compared to its current rules. For instance, by increasing the revenues thresholds, entities previously eligible for small business bidding credits under the current schedule may become eligible for a higher bidding credit tier under the proposed amended schedule, and entities that previously exceeded the highest revenue threshold may become eligible. Similarly, bidders that previously exceeded the thresholds as a result of attributable revenues under the AMR rule may fall below the thresholds, and thus become eligible for small business bidding credits, if the AMR rule is eliminated as proposed in the *Competitive Bidding NPRM.*

65. Further, the Commission proposes to continue its practice of soliciting comment on the appropriate small business size standards in connection with establishing rules for any particular service. As the Commission has done in the past and pursuant to 47 CFR 1.2110(c)(1), it would continue to take into consideration the characteristics and capital requirements of each service. The Commission seeks comment on this proposal. Alternatively, should the Commission utilize all three small business definitions and bidding credit tiers in every service? Under this approach, the Commission would make bidding credits available to any business that meets one of the small business definitions without engaging in an assessment of the likely capital requirements of the specific service for which licenses are being offered. What are the advantages and disadvantages of this alternative approach? If the Commission continues to adopt small business definitions on a service-by-service basis, are there other factors that it should consider in determining which small business definition to apply to a specific service? Alternatively, if the Commission adopts its proposed modifications to the AMR and small business size standards, should it consider reducing the level of bidding credits it awards? Commenters should provide specific suggestions on how the Commission should weigh its proposals collectively.

66. The Commission also seeks comment on whether any revisions it adopts in this proceeding to its part 1 schedule of small business size standards and associated bidding credit percentage levels should apply to the specific small business definitions and bidding credit percentages the Commission has previously adopted for specific services, and, if so, how such revisions would be implemented. In particular, the Commission proposes that any new rules adopted in this proceeding would apply to the 600 MHz band spectrum licenses to be offered in the BIA. In the BIA proceeding, the Commission adopted a 15 percent bidding credit for small businesses (defined as entities with average annual gross revenues for the preceding three years not exceeding $40 million) and a 25 percent bidding credit for very small businesses (defined as entities with average annual gross revenues for the preceding three years not exceeding $15 million). Consistent with the increased gross revenues thresholds the Commission proposes for the standardized schedule in its part 1 competitive bidding rules, the Commission also proposes to increase the gross revenues thresholds associated with the 15 and 25 percent bidding credits adopted for the 600 MHz band. That is, for the 600 MHz band, the Commission proposes to provide a bidding credit of 25 percent for businesses with average gross revenues for the preceding three years not exceeding $20 million and a bidding credit of 15 percent for businesses with average gross revenues for the preceding three years not exceeding $55 million. The Commission seeks comment on this proposal. In addition, the Commission seeks comment on whether to adopt a third tier of small business bidding credits for the 600 MHz band that would provide a 35 percent bidding credit to businesses with average gross revenues for the preceding three years not exceeding $4 million. If the Commission re-auctions licenses for existing services, should the previously adopted service-specific small business definitions and bidding credit percentages be revised for those services to reflect any changes to its part 1 schedule in 47 CFR 1.2110(f)(2)?

2. Other Bidding Preferences

67. The Commission's primary method of fulfilling its statutory mandate regarding DEs has been to offer auction bidding credits to small business applicants. Periodically, however, interested parties have suggested that the Commission offer bidding preferences to entities based on criteria other than business size. As the Commission has explained in the past, its ability to implement suggestions to target bidding credits to other types of entities is constrained by both its statutory authority and standards of judicial review. The Commission seeks comment on these suggestions and asks commenters to specifically address the statutory authority and judicial scrutiny issues that may limit its ability to entertain recommendations to alter the focus of its current bidding preferences.

a. Minority- and Women-Owned Businesses and Rural Telephone Companies

68. Section 309(j)(4)(D) of the Act directs the Commission to consider the use of bidding preferences to ensure that small businesses, rural telephone companies, and businesses owned by members of minority groups and women are given the opportunity to participate in the provision of spectrum-based services. The Commission seeks comment on whether the current small business provisions are sufficient to promote participation by businesses owned by minorities and women, as well as rural telephone companies. To the extent that commenters propose additional provisions to ensure participation by minority-owned or women-owned businesses, they should address how such provisions could be crafted to meet the relevant standards of judicial review. The Commission asks commenters advocating for the adoption of rural bidding credits to supply data demonstrating that rural telephone companies lack access to capital or face barriers to capital formation similar to those faced by other DEs.

b. Unserved/Underserved Areas and Persistent Poverty Preferences

69. The Commission seeks comment on whether it should extend bidding credits to winning bidders that deploy facilities and provide service to unserved or underserved areas. If the Commission adopts bidding credits for service to unserved or underserved areas what criteria should it consider to determine if an area is unserved or underserved? Should any unserved/

underserved area bidding credits be available in all areas lacking service, only in rural areas, or only in persistently poor counties? As required of providers awarded universal service funds through the Mobility Fund Phase I auctions, should a wireless provider awarded an unserved/underserved bidding credit be required to provide a certain level of service (e.g., 3G or 4G) by a certain time frame (e.g., two or three years) in order to retain the benefit of the bidding credit?

70. The Commission also seeks comment on whether the Commission should offer a bidding credit to winning bidders that will use their licensed spectrum to deploy service to persistent poverty counties. As defined by the Department of Agriculture's Economic Research Service (ERS), a county is persistently poor if 20 percent or more of its population was living in poverty over the last 30 years. According to the ERS, ''there are currently 353 persistently poor counties in the United States (comprising 11.2 percent of all U.S. counties).'' The ERS further explains that ''[t]he large majority (301 or 85.3 percent) of the persistent-poverty counties are nonmetro, accounting for 15.2 percent of all nonmetro counties. Persistent poverty also demonstrates a strong regional pattern, with nearly 84 percent of persistent-poverty counties in the South, comprising of more than 20 percent of all counties in the region.'' The ERS information is available on the ERS Web site under ''Geography of Poverty,'' at *http://www.ers.usda.gov/topics/rural-economy-population/rural-poverty-well-being/geography-of-poverty.aspx.* If the Commission adopts such a bidding credit, should it impose strict performance requirements on providers awarded bidding credits for licenses covering persistent poverty counties similar to those required of winning bidders awarded Tribal land bidding credits? Should this type of bidding credit only apply to licenses covering persistent poverty counties that are only served by two or fewer wireless service providers?

71. If the Commission adopts unserved/underserved area and/or persistent poverty county bidding credits, should the bidding credits be available only to small businesses and/or other DEs, or to any applicant? How would the Commission calculate the credit amount where the unserved or underserved area or targeted counties cover a portion of a license area? Should the bidding credit be applied to the total amount of the winning bid for a license, or should it be applied to a portion of the winning bid based on a percentage of population or square miles of the license area covered by the unserved/underserved area or identified counties or some other metric? What size bidding credit would be appropriate for either an unserved/underserved area bidding credit or a persistent poverty county bidding credit? If an applicant qualifies for both bidding credits, should the Commission limit the amount of the combined credit? Similarly, if an applicant qualifies for one of these credits in addition to a small business bidding credit, should the credits be cumulative and, if so, should there be a limit on the amount of the aggregate bidding credit provided? Should any limit be an amount greater than the maximum small business bidding credit to allow DEs eligible for the highest bidding credit tier to receive an increased benefit for also providing service to an unserved/underserved area and/or persistent poverty county? Commenters supporting cumulative bidding credits should provide data or support justifying the need for higher bidding credits in unserved/underserved and/or persistent poverty areas. Alternatively, are issues relating to lack of deployment or low levels of deployment of wireless services in rural and poor areas better addressed through means other than the Commission's bidding credit program, such as through service-specific build-out requirements or reliance on incentives through its Mobility Fund and other universal service programs?

72. The Commission seeks comment on its authority to implement these types of bidding preferences. The Commission notes that it has previously implemented bidding credits based on other criteria than business size in order to facilitate service to Tribal lands. *See In the Matter of Extending Wireless Telecommunications Services to Tribal Lands,* 65 FR 47366, May 2, 2003 *(Tribal Lands Report and Order*). In that proceeding, the Commission found that the objectives and requirements of section 309(j) of the Act, which the Commission must consider in designing competitive bidding systems, authorized it to grant bidding credits targeted specifically to entities that commit to bringing much needed wireless telecommunications services to Tribal lands. Specifically, in the Tribal Lands Report and Order, the Commission found that Tribal Land bidding credits further the objective of section 309(j)(3)(A) to ensure ''the development and rapid deployment of new technologies, products, and services for the benefit of the public, including those residing in rural areas. . . .'' and the objective of section 309(j)(3)(D) of promoting ''efficient and intensive use of the electromagnetic spectrum.'' The Commission also found that there is no indication in section 309(j)(4)(D) or in its legislative history that the Commission's authority to award bidding preferences is limited to small businesses, rural telephone companies, and businesses owned by members of minority groups and women. As such, the Commission tentatively concludes that section 309(j) of the Act similarly authorizes the Commission to provide bidding credits for service to unserved/underserved areas and persistent poverty counties. The Commission seeks comment on its tentative conclusion.

c. Overcoming Disadvantages Preference

73. In view of renewed interest raised in the BIA proceeding, the Commission also seeks additional comment on the 2010 Recommendation by the FCC's Advisory Committee on Diversity for Communications in the Digital Age (2010 Recommendation) to implement a bidding preference for persons or entities who have overcome substantial disadvantage (referred to herein as an overcoming disadvantages preference or ODP). In that 2010 Recommendation, the Committee proposed that the Commission should provide an auction bidding credit for otherwise qualified persons or entities that have overcome substantial disadvantages, to allow them to compete on equal footing with other applicants. The Committee stated that an ODP would provide a fair opportunity for highly qualified applicants to compete for spectrum licenses, thereby expanding the pool of eligible bidders in an auction. The 2010 Recommendation is available at *http://www.fcc.gov/DiversityFAC/meeting101410.html.* The Media and Wireless Telecommunications Bureaus subsequently issued a public notice seeking comment on additional information that would be helpful in evaluating whether and how to pursue the Committee's proposal: The *Overcoming Disadvantage Preference Public Notice,* 75 FR 81274, Dec. 27, 2010.

74. Commenters should specifically address the Commission's statutory authority to adopt such a preference and how such a preference could be crafted to meet the relevant standards of judicial review. Would a preference for those who have overcome a substantial disadvantage be subject to a ''rational basis'' constitutional standard, as the 2010 Recommendation indicates? Additionally, the Commission seeks detailed comment on how the

preference would provide additional opportunities not available under the current bidding credit program, particularly if the current program is amended as proposed in the *Competitive Bidding NPRM.*

75. The Commission also asks for input on how it might systematically collect and maintain data in order to implement and administer an ODP. What legal basis does it have to collect data, and what precise data would the Commission need to support such a proposal?

76. The Commission asks commenters to address how eligibility for an ODP could be demonstrated, providing specific information as to what definitions of disadvantages could qualify individuals or entities for the preference. How would it measure when any particular disadvantage had been overcome? The 2010 Recommendation provides a non-exhaustive list that includes disadvantages such as physical disabilities or psychological disorders that rendered professional or business advancement substantially more difficult than for most individuals. How could the Commission avoid subjective determinations and implement and apply an ODP on a neutral basis? The Commission asks commenters to discuss how it could establish eligibility for the preference objectively. How could the Commission render eligibility determinations for an ODP without appearing arbitrary? How could it safeguard any such benefits to ensure they are awarded only to eligible persons or entities?

77. The Commission also seeks detailed comment on how it could administer an ODP. Commenters should identify the costs and benefits associated with such a program, addressing matters such as how reviews would be conducted, and the nature of the demonstration applicants seeking a preference would be required to make, as well as how individualized evaluation for the preference would be incorporated into a time-sensitive short-form application process or whether alternatives such as pre-qualification would be necessary.

78. As acknowledged by the Advisory Committee, its ODP proposal raises a number of issues that need to be refined and resolved in order to design and implement such a preference, and comment provided to date has not provided sufficient basis or justification for doing so. Therefore, commenters that continue to support the adoption of an ODP are encouraged to provide as detailed and specific suggestions as possible regarding the Commission's authority to establish the ODP and its objectives in doing so, as well as eligibility for, and administration of, the preference, to assist the Commission in determining a legal, neutral, and efficient way in which it could implement an ODP. Alternatively, the Commission asks commenters to consider whether the proposals the Commission has made to amend its existing DE program would obviate the need for the adoption of such a preference.

D. DE Reporting Requirements

79. *Background.* Section 1.2110(n) requires DE licensees to file an annual report with the Commission that includes, at a minimum, a list and summaries of all agreements and arrangements, extant or proposed, that relate to eligibility for DE benefits. The list must include the parties (including affiliates, controlling interests, and affiliates of controlling interests) to each agreement or arrangement, as well as the dates on which the parties entered into each agreement or arrangement. DEs are required to file a report for each of their licenses no later than, and up to five business days before, the anniversary of the date of license grant.

80. *Discussion.* The Commission proposes to repeal this reporting requirement. The information DEs are required to include in their annual reports is duplicative of information that they provide in their auction and license applications. *See* 47 CFR 1.2110(j), 1.2112(b)(2)(iii). In addition, before entering into leases or other agreements that might affect their eligibility, DEs must seek Commission approval and must list and summarize those agreements, including the parties to and the dates of the agreements. *See* 47 CFR 1.2114. Moreover, for licensees with multiple auction licenses, each having a different grant date, the burden of the annual reporting requirement is exacerbated by the obligation to file multiple reports each year. For these reasons, the Commission tentatively concludes that the value of the information provided in these annual reports may no longer outweigh the reporting burden that they impose on DEs.

81. The Commission seeks comment on its proposal. In particular, commenters are invited to address whether there are any benefits to retaining the annual reporting requirement that the Commission has failed to consider. Does this reporting requirement in any way help the Commission identify agreements between parties relating to small business eligibility that might otherwise escape attention? Commenters should specifically address how other rules render this reporting requirement duplicative and how other rules adequately ensure that the Commission is aware of all agreements between parties relating to small business eligibility. Will relieving DEs of this annual reporting requirement reduce their regulatory burdens to any measurable degree? Without this reporting requirement, will the Commission continue to have the necessary tools to safeguard DE benefits from unjustly enriching ineligible entities? If the Commission adopts this proposal to eliminate this annual reporting requirement, should the Commission amend the requirement in 47 CFR 1.2114 that a small business list and summarize all existing agreements to provide context each time it reports a new eligibility event?

E. MMTC's White Paper Requests

82. *Background.* In February 2014, MMTC submitted a White Paper detailing several policy recommendations to advance minority and women spectrum license ownership. In addition to requesting the elimination of the AMR, an increase in bidding credits, and a substantive review of proposed DE rules, the White Paper requests Commission action in the following areas: (1) Reinstitute select DE-only closed spectrum auctions; (2) Incorporate diversity and inclusion in the Commission's public interest analysis of mergers and acquisitions (M&As) and secondary market spectrum transactions; (3) Conduct ongoing recordkeeping of DE performance; (4) Complete the *Adarand* Studies, updating the section 257 studies released in 2000; (5) Regularize procedural requirements; and (6) Support increased funding for and statutory amendments regarding the Telecommunications Development Fund. The Commission notes that MMTC's above request with respect to ''ongoing recordkeeping of DE performance'' refers to retaining specific information about minority- and woman-owned business enterprise bidders, in addition to the small business status.

83. *Discussion.* The Commission seeks comment on the proposals that are not otherwise addressed in the NPRM, and to the extent that they relate to its competitive bidding rules. The Commission observes that certain proposals appear to be outside the scope of this proceeding and others may not be needed in light of other changes proposed herein. Toward that end, the Commission tentatively concludes that the following MMTC proposals are

outside the scope of this proceeding, which is focused on its competitive bidding rules, and thus will not be addressed here: (1) Incorporating diversity and inclusion in the Commission's public interest analysis of mergers and acquisitions and secondary market spectrum transactions; and (2) supporting increased funding for and statutory amendments regarding the Telecommunications Development Fund. The Commission seeks comment on MMTC's additional requests, including discussion regarding the relative costs and benefits of each proposal. Are the proposals that the Commission describes elsewhere in the NPRM, including the elimination of the AMR rule, sufficient to address the concerns identified by MMTC regarding the participation of businesses owned by members of minority groups and women in the provision of spectrum-based services?

III. Other Part 1 Considerations

84. In advance of an auction that could hold historic potential for interested applicants to acquire licenses for below-1-GHz spectrum, the Commission also explores the need for other revisions to its general part 1 competitive bidding rules to improve the transparency and efficiency of the auction and its processes. The Commission proposes changes to its former defaulter rule that seek to balance commenters' concerns that the current rules are overly broad with its continued need to ensure that auction bidders are financially reliable. The Commission also proposes to codify an existing competitive bidding procedure that prohibits the same individual or entity from filing more than one short-form application to participate in an auction and it proposes a new rule that would prevent entities that are exclusively controlled by a single individual or set of individuals from becoming qualified to bid on the basis of more than one short-form application in a specific auction. Both proposals seek to prevent duplicative filings and to avert anticompetitive bidding behavior at auction. Regarding the joint bidding rules, the Commission seeks comment on, among other issues, its tentative conclusions that it would be in the public interest to retain the current rules governing joint bidding arrangements among non-nationwide providers and to prohibit joint bidding arrangements among nationwide providers. Additionally, the Commission provides notice of its intention to resolve long standing petitions for reconsideration and proposes necessary clean-up revisions to its part 1 competitive bidding rules.

A. Former Defaulter Rule

85. *Background.* Each potential participant in a Commission auction must certify on its pre-auction short-form application whether or not the applicant, its affiliates, its controlling interests, and the affiliates of its controlling interests have ever been in default on any Commission license or have ever been delinquent on any non-tax debt owed to any federal agency. With the exception of the Commission's upcoming auction for AWS–3 licenses (Auction 97) for which it recently granted a limited blanket waiver, an applicant is considered to be a ''former defaulter'' if the applicant, including any of its affiliates, its controlling interests, or any of the affiliates of its controlling interests, has defaulted on any Commission license or been delinquent on any non-tax debt owed to any federal agency, but has since remedied all such defaults and cured all of its outstanding non-tax delinquencies. Former defaulters are eligible to bid in a Commission auction provided they are otherwise qualified, but are required to pay upfront payments that are 50 percent more than the normal upfront payment amounts.

86. In the *Part 1 Fifth Report and Order,* the ''former defaulter'' policies were incorporated into the Commission's part 1 general competitive bidding rules. *See Amendment of Part 1 of the Commission's Rules—Competitive Bidding Procedures,* 65 FR 52323, Aug. 29, 2000 (*Part 1 Fifth Report and Order*). The Commission reasoned that the integrity of the auctions program and the licensing process dictates requiring a more stringent financial showing from applicants with a poor federal financial track record. Thus, while cure of an outstanding federal default or delinquency enables the former defaulter to participate in an auction, the rules require the former defaulter to make a larger upfront payment. Other than in the recent waiver for Auction 97, the former defaulter rule has been applied without any limitation as to age or scope of an applicant's prior default or delinquency.

87. On August 29, 2014, in response to unopposed requests from wireless industry parties, the Commission granted a limited blanket waiver to narrow the circumstances under which an applicant for Auction 97 would be considered a former defaulter and required to submit a larger upfront payment to qualify to bid. The Commission concluded that the underlying purpose of the upfront payment and former defaulter rules would not be served by their broad application in the AWS–3 auction, and that a limited waiver served the public interest. Specifically, for Auction 97, the Commission waived the former defaulter rule for applicants to exclude any cured default or delinquency for which any of the following criteria were met: (1) The notice of the final payment deadline or delinquency was received more than seven years before the Auction 97 short-form application deadline of September 12, 2014; (2) the amount of the default or delinquency falls below $100,000; (3) the default or delinquency was paid within two quarters (i.e., 6 months) after receiving the notice of the final payment deadline or delinquency; or (4) the default or delinquency was the subject of a legal or arbitration proceeding that was cured upon resolution of the proceeding. *See Petition of DIRECTV Group, Inc. and EchoStar LLC (collectively, DIRECTV/EchoStar) for Expedited Rulemaking to Amend Section 1.2105(a)(2)(xi) and 1.2106(a) of the Commission's Rules and/or for Interim Condition Waiver; Auction of Advanced Wireless Services (AWS–3) Licenses Scheduled for November 13, 2014 (Auction 97),* RM–11395; AU Docket No. 14–78, *Order,* FCC 14–130, para. 1 (rel. Aug. 29, 2014) (*Auction 97 Former Defaulter Waiver Order*). Pursuant to the *Auction 97 Former Defaulter Waiver Order,* only applicants that have had a cured default or delinquency that falls outside of these exclusions would have to certify to being a ''former defaulter'' and submit a larger upfront payment in Auction 97. The *Auction 97 Former Defaulter Waiver Order* noted that the Commission's limited grant of the blanket waiver for Auction 97 was without prejudice to its further examination and disposition, based on a complete record, of the issues surrounding the former defaulter rule through a rulemaking proceeding.

88. *Discussion.* Although the former defaulter rule serves an important and necessary function to ensure that bidders are capable of meeting their financial commitments, the Commission tentatively concludes that the rule may be too far-reaching and impose unnecessary costs and burdens on auction participants. The Commission proposes a more tailored approach by balancing concerns that the current application of the rule is overbroad with its continued need to ensure that auction bidders are financially reliable. The Commission seeks comment on revising the rule to narrow the scope of

the defaults and delinquencies that will be considered in determining whether or not an auction participant is a former defaulter. Specifically, the Commission proposes to exclude any cured default on any Commission license or delinquency on any non-tax debt owed to any federal agency for which any of the following criteria are met: (1) The notice of the final payment deadline or delinquency was received more than seven years before the relevant short-form application deadline; (2) the default or delinquency amounted to less than $100,000; (3) the default or delinquency was paid within two quarters (i.e., 6 months) after receiving the notice of the final payment deadline or delinquency; or (4) the default or delinquency was the subject of a legal or arbitration proceeding that was cured upon resolution of the proceeding. The Commission seeks comment on limiting the individuals and entities that an applicant must consider when determining its status as a former defaulter.

89. In offering these proposals to limit the former defaulter rule, the Commission keeps in mind the underlying purposes of the upfront payment rule generally, and the increased upfront payment required of former defaulters. The Commission typically requires auction participants to provide upfront payments in order to qualify to bid in an auction. Upfront payments help prevent frivolous or insincere bidding and provide the Commission with a source of funds from which to collect payments owed at the close of auction. In adopting an upfront payment requirement, the Commission also recognized that it was balancing the goal of encouraging bidders to submit serious, qualified bids with the desire to simplify the bidding process and minimize implementation costs that will be imposed on bidders. The original former defaulter rule appeared in the Commission's part 24 Broadband PCS rules in the wake of financial difficulties of participants in the C Block auctions. The Commission subsequently incorporated the part 24 former defaulter policies into the part 1 general competitive bidding rules, noting that the rule's purpose was to preserve the integrity of the auction process and ensure that bidders are capable of meeting their financial commitments to the Commission. As the Commission noted in the *Auction 97 Former Defaulter Waiver Order,* in the 14 years since that Commission action, its auctions program has matured and the mobile wireless industry has grown into a major segment of the nation's economy. Accordingly, the Commission considers in the *Competitive Bidding NPRM* whether the current broad rule continues to strike the right balance to promote the goals of its upfront payment and former defaulter rule.

90. The parties that requested waiver of the former defaulter rule also suggest that the Commission modify the rule. For instance, in their petition, DIRECTV/EchoStar argue that, as currently written, the former defaulter rule applies too broadly to effectively advance the Commission's goal of ensuring that auction bidders are financially reliable. In their joint filing, CCA, CEA, CTIA and NTCA (the Four Associations) mirror that sentiment and suggest that the scope of the rule is unnecessary to achieve its purpose, particularly when the former defaults or delinquencies are in a relatively small amount or were cured years prior. These parties offer a variety of ways to limit the scope of the former defaulter inquiry, but all consistently contend that the rule is unnecessarily broad to serve its underlying purpose. The Commission seeks comment on its specific proposals to narrow the scope of the defaults and delinquencies that would trigger an auction applicant's former defaulter status and asks commenters to address whether, if such proposals are adopted, the Commission can still promote the important protective functions of its upfront payment and former defaulter rules.

91. Parties urge first that prior delinquencies and defaults more than a certain number of years old should be excluded from the scope of the former defaulter rule. In the *Auction 97 Former Defaulter Waiver Order,* the Commission excluded from consideration under the former defaulter rule any cured default or delinquency for which the notice of the final payment deadline or delinquency was received more than seven years before the Auction 97 short-form application deadline of September 12, 2014. The Commission concluded that the rule's current unlimited time period may capture former defaults and delinquencies that have lost their relevance to a bidder's current capability to meet its financial commitments to the Commission, and thus may no longer warrant a larger upfront payment for Auction 97. Initially, advocates seeking a more limited time frame for the rule's application argued that a three year period would correspond to certain Federal tax statute of limitations. In seeking a waiver for Auction 97, CCA, CTIA and NTCA (the Three Associations) suggested that the Commission should define former defaulters to include only those applicants who have received notice of defaults or delinquencies within seven years before the Auction 97 short-form application deadline. In the *Auction 97 Former Defaulter Waiver Order,* the Commission noted that while federal tax laws have a three-year statute of limitations to determine if certain forms of additional tax are owed, the period of limitations to determine whether income was under-reported is six years and the Internal Revenue Service has a seven-year period to review a claim for a loss from worthless securities or a bad debt deduction. Likewise, the Commission acknowledged that the Fair Credit Reporting Act limits many types of reporting by consumer credit agencies for a period of seven years. In light of these longer federal limitations periods, the Commission tentatively concludes that the purposes of the upfront payment and former defaulter rules may be furthered more precisely if the Commission excludes any cured default on a Commission license or a delinquency on a non-tax debt owed to a federal agency where the notice of the final payment deadline or delinquency was received more than seven years before the short-form application deadline. In doing so, the Commission notes that the determination of a notice of a final payment deadline or delinquency depends on the origin of the federal non-tax debt giving rise to a default or delinquency and such notice may be express or implied. To the extent that the rules providing for payment of a specific federal debt permit payment after an original payment deadline accompanied by late fee(s), such debts would not be in default or delinquent for purposes of applying the former defaulter rules until after the late payment deadline. For the purposes of the certifications required on a short-form auction application, notice provided by Commission staff assessing a default payment arising out of a default on a winning bid constitutes notice of the final payment deadline with respect to a default on a Commission license. The Commission seeks comment on all aspects of this proposal—the number of years specified (seven), the triggering event (upon receipt of the notice of the final payment deadline or delinquency), and the point at which the counting of the age of the triggering event is cut off (the short-form application deadline). To the extent commenters advocate a different length of time, an alternate triggering event, or another way of calculating how long ago the triggering event

occurred, the Commission urges them to be specific as to why their proposal is more appropriate given the policies behind its rule. Should the length of time it took the defaulter to cure the debt, or how recently the cure occurred, be a factor?

92. Those favoring modification of the rule also suggest excluding former defaults or delinquencies that fall below a certain amount. The *Auction 97 Former Defaulter Waiver Order* excluded from consideration under the former defaulter rule for Auction 97 any former default or delinquency for which the amount of the resolved debt or delinquency fell below $100,000. Parties initially suggested excluding defaults or delinquencies of what they defined as *de minimis* in nature, and specifically suggested that the Commission should ignore any former default or delinquency totaling less than the lesser of $100,000 or 0.1 percent of the average annual revenues of the applicant, as computed by its competitive bidding rules. The Three Associations later suggested that the Commission exclude from the definition of former defaulter any cured defaults on a Commission license or delinquencies on a non-tax debt owed to a federal agency in an amount of less than $100,000. In the *Auction 97 Former Defaulter Waiver Order,* the Commission noted the $100,000 amount is used in other contexts to distinguish between less significant or material issues and more significant ones and the Commission concluded that for the purposes of Auction 97, requiring a larger upfront payment based on any cured default or delinquency that is less than $100,000 could discourage participation in Auction 97 without appreciably ameliorating the risk of bidder defaults, and thereby undermine the underlying purposes of its upfront payment and former defaulter rules.

93. For clarity and efficiency of the administration of the former defaulter rule from both the Commission's and applicants' perspectives, the Commission now proposes to adopt for future auctions generally the same bright-line standard established in the *Auction 97 Former Defaulter Waiver Order* that would exclude from the rule any former default on a Commission license or delinquency on a non-tax debt owed to a federal agency where the amount of the resolved debt falls below $100,000. The Commission tentatively concludes that such an exclusion will simplify the application process and minimize implementation costs imposed on applicants by excluding former defaults and delinquencies for which consideration is no longer necessary to ensure bidders in a more mature wireless industry submit serious, qualified bids. The $100,000 threshold aligns with Commission precedent and is used in other contexts to determine the materiality or significance of various issues. *See Auction 97 Former Defaulter Waiver Order at para. 18.* If commenters disagree with the amount proposed, the Commission encourages them to provide specific examples of how former defaults or delinquencies of a different amount would better reflect an auction applicant's financial reliability. The Commission also seeks comment on whether its proposal adequately weighs its need to consider debts of a serious nature that are indicative of a bidder's poor federal track record with the burdens faced by many applicants in complying with the current rule, which might be considered open-ended in scope.

94. To address situations where, due to incorrect addresses, delivery problems, or internal issues, applicants may not timely pay obligations, but cure such debts when discovered, the Three Associations also contend that the Commission should for the purposes of the former defaulter rule exclude certain additional resolved debts. For Auction 97 applicants, the Commission waived the former defaulter rule to exclude any cured default or delinquency where the debt was paid within two quarters (i.e., 6 months) after receiving the notice of final payment deadline or delinquency. There, the Commission concluded that the prompt cure of such a default or delinquency sufficiently demonstrated an applicant's financial wherewithal, that therefore it was unnecessary to require a larger upfront payment from the applicant, and that a waiver under such circumstances served the public interest by encouraging prompt payment of debts owed to the government. The Commission now proposes to modify the former defaulter rule generally to exclude a default or delinquency that was paid within two quarters (i.e., 6 months) after receiving the notice of the final payment deadline or delinquency for the same reasons articulated in the *Auction 97 Former Defaulter Waiver Order.* The Commission seeks comment on whether this exclusion will allow it to appropriately balance the practicalities that may affect the applicants' ability to timely resolve their debts with the need to ensure that bidders are capable of meeting their financial commitments to the Commission. The Commission also invites commenters to address whether payment within some other time period might better strike that balance, and whether receipt of the notice of the final payment deadline or delinquency is the appropriate triggering event for this exclusion.

95. Similarly, the Three Associations also suggest for the purposes of modifying the former defaulter rule that an applicant should not be considered to be in default if any debt is the subject of a good faith dispute or a pending legal or arbitration proceeding. In the *Auction 97 Former Defaulter Waiver Order,* the Commission included this suggestion in part, and concluded that where the default or delinquency was the subject of a legal or arbitration proceeding and was cured upon resolution of the proceeding, an applicant has demonstrated sufficient financial credibility so that it was not necessary to require a larger upfront payment from it in Auction 97. The Commission determined that waiver under such circumstances served the public interest by encouraging prompt resolution of debts associated with legal or arbitration proceedings. The Commission declined, however, to waive the larger upfront payment requirement for debts that are subject to a ''good faith dispute'' because it reasoned that such a provision, even for cured debts, would be too ambiguous to be efficiently applied during the auction short-form application process. The Commission proposes to modify the former defaulter rule generally to exclude a default or delinquency that was the subject of a legal or arbitration proceeding and was cured upon resolution of the proceeding. As in the *Auction 97 Former Defaulter Waiver Order,* the Commission does not intend to include within the scope of this exclusion any proceedings based on requests for waiver of a rule requiring payment of a debt or delinquency. The Commission seeks comment on whether its proposed exclusion addresses parties' concerns that debts such as these are not indicative of an applicant's financial credibility such that they should require an applicant to submit a larger upfront payment. Should the Commission also exclude debts cured after resolution of a ''good faith dispute,'' and if so, how could such ''good faith disputes'' be verified during the short-form application process, if necessary? Is the proposed general exclusion for debts cured upon resolution of a legal or arbitration proceeding necessary? In the alternative, should the Commission expect financially reliable applicants to pay outstanding defaults on Commission licenses, or delinquencies on any non-

tax debt owed to any federal agency, while legal or arbitration proceedings are pending, even if the applicant's liability or the amount of the debt is in dispute?

96. In their petition, DIRECTV/EchoStar also maintain that the former defaulter rule should apply only to auction participants and those individuals or entities that are in a position to affect whether such applicants meet their auction-related financial responsibilities and urge the exclusion of debts/delinquencies relating to personal obligations of officers or directors of entities that are not the auction applicant, e.g., excluding personal obligations of officers and directors of the applicant's parent companies. More recent requests to amend the former defaulter rule do not include any suggestion to limit the scope of individuals and entities that an applicant needs to consider in evaluating its former defaulter status.

97. In implementing the former defaulter provisions, the Commission has included the applicant's affiliates, its controlling interests, and affiliates of its controlling interests in determining if an applicant is a former defaulter. The Commission recognizes, however, that some of the individuals and entities that fall within these definitions may play no role in the applicant's general financial responsibilities and may not affect an applicant's ability to meet its financial obligations arising from an auction. Therefore, the Commission seeks comment on possible ways to amend the former defaulter provisions to apply only to individuals and entities that play a role in the applicant's financial responsibilities. If the Commission were to adopt DIRECTV/EchoStar's proposal to include only individuals or entities that are in a position to affect whether such applicants meet their auction-related financial responsibilities, how could it verify who would fit within such a category? In their request for waiver, DIRECTV/EchoStar suggest specifically not applying the rule to officers and directors of parent entities. Under such an option, however, what would prevent applicants from evading the rule by simply creating a shell company to be the auction applicant?

98. Another option would be to limit the former defaulter inquiry to those individuals or entities that an applicant must disclose on its short-form application pursuant to 47 CFR 1.2112. For non-DEs, this would limit the inquiry to the applicant and disclosable interest holders under 47 CFR 1.2112(a). For DEs, the Commission could, under this option, continue to include those individuals and entities that are attributable to the applicant under 47 CFR 1.2112(b)(iv) in any consideration of an applicant's form defaulter status. As such, the Commission recognizes that, while such an option may exclude some individuals and entities not directly related to an applicant's auction finances, it could also expand the scope of individuals or entities that must be considered in some respects. The Commission could limit the inquiry to, for example, the real party or parties in interest in the applicant or application, which must be disclosed pursuant to 47 CFR 1.2112(a)(1). Would this option capture the individuals and entities that are in a position to affect whether an applicant meets its auction-related financial responsibilities? Would excluding officers and directors not otherwise covered by 47 CFR1.2112(a)(1) be inconsistent with the Commission's policy to attribute them for purposes of evaluating eligibility for designated entity bidding credits in light of their potential ability to influence the management or operation of the applicant?

99. Finally, the Commission seeks comment as to other possible ways to limit the scope of the former defaulter rule. For example, the Commission could define the rules to include only defaults or delinquencies related to its auction payments, or defaults or delinquencies on debt owed only to the Commission as opposed to those owed on other government non-tax debt, such as student loans. The Commission notes, however, that such further limitations may not be necessary given the other limitations that it proposes.

B. Commonly Controlled Entities

100. The Commission proposes to codify an established competitive bidding procedure that prohibits the same individual or entity from filing more than one short-form application. Additionally, the Commission proposes a new rule that would prevent entities that are exclusively controlled by a single individual or set of individuals from qualifying to bid on licenses in the same or overlapping geographic areas in a specific auction on more than one short-form application.

101. *Background.* The Commission's competitive bidding procedures have long prohibited the same individual or entity from submitting multiple short-form applications in any auction. This restriction prevents duplicative filings and may avert anticompetitive bidding behavior.

102. There is currently no similar procedure for commonly controlled entities. The competitive bidding rules and procedures currently contain no explicit prohibition on commonly controlled entities participating in the same auction and bidding on the same licenses. Several years ago, the Commission declined to set aside the results of an auction based on allegations relating to the participation of separate applicants that were commonly controlled. In that decision, the Commission acknowledged that auction participation by commonly controlled applicants could serve legitimate business purposes if such entities have different business plans, financing requirements, or marketing needs; however, it noted that there could be risks inherent in allowing commonly controlled bidders to participate in an auction. *See Petition for Reconsideration and Motion for Stay of Paging Systems, Inc., Memorandum Opinion and Order, 25 FCC Rcd 4036 (2010).*

103. *Discussion.* The Commission proposes to amend its competitive bidding rules to codify its restriction on the filing of multiple auction applications by the same individual or entity and to adopt a new rule that would prevent entities that are controlled exclusively by the same single individual or set of individuals from qualifying to bid based on multiple auction applications for the same or overlapping geographic license areas. By proposing these amendments to its Part 1 competitive bidding rules, the Commission seeks to improve the transparency and efficiency of the auction process, by making clearer who the qualified bidders actually are and ensuring against the potential for anticompetitive auction behavior.

104. *Duplicate auction applications.* The Commission proposes to amend 47 CFR 1.2105 to prohibit the same individual or entity from filing more than one short-form application for an auction. The Commission observes that in contexts other than competitive bidding, its rules already limit repetitious or conflicting applications. Prohibiting the same individual or entity from filing multiple applications to participate in an auction protects the Commission against the burden of duplicative, repetitious or conflicting applications. Moreover, in this context, such applications raise potential concerns that duplicate filers may be able to manipulate the auction process—using, for example, identical bids or multiple activity waivers—to pursue potentially anticompetitive ends. The Commission seeks comment on this proposal. Are there any specific reasons the Commission should allow for the filing of more than a single short-form

application from the same individual or entity? Commenters should describe any public interest benefits to support their positions.

105. *Applications by entities exclusively controlled by the same individual or set of individuals.* The Commission also proposes to adopt a new rule to provide that where entities are under the common, exclusive control of a single individual or set of individuals (i.e., a single individual or same set of individuals is the exclusive controlling interest of more than one entity) only one short-form application from such entities could become qualified to participate with respect to any particular geographic license area or overlapping areas. In defining the entities that would be subject to this rule, the Commission proposes to use the concepts of ''control'' or ''controlling interest'' from 47 CFR 1.2110, which also applies by its terms to DEs. Even when applicants are not identical, if more than one applicant is under the exclusive control of a single individual or set of individuals, such common control may allow the controlling individual or set of individuals to attempt to gain advantages in the bidding process based on certain coordinated bidding actions (e.g., tied bids, activity waivers). While such entities may have different business plans, financing, accounting, non-controlling interest holders or minority investors, if they are under exclusive control of a single individual or set of individuals, under the Commission's proposal those entities could not become qualified to bid in an auction with respect to the same or overlapping geographic license areas. The Commission seeks comment on this proposal and on specific alternatives to address its concerns.

106. Multiple applicants under the common control of a single individual or set of individuals may coordinate their bidding actions in ways not available to a single bidder, and may, in some cases, derive some advantage from doing so. For example, such multiple applicants would have more activity waivers to use to ensure that the auction remains open, or would be able to submit identical bids on a license in ways intended to exploit auction bidding procedures. In addition, such multiple applicants could potentially coordinate their bidding to gain some advantage in the context of random tie-breakers or through increasing the bidding activity on a single license in order to raise minimum acceptable bids more quickly through application of the exponential smoothing formula.

107. Further, the mere presence of commonly controlled applicants making identical bids in a single auction may damage the transparency of the auction process. For example, the placing of multiple identical bids by commonly controlled applicants may mislead other bidders about the extent of bidding competition, especially in an anonymous bidding auction where competitors are unable to discern whether bids are placed by commonly controlled applicants or independent competitors. The Commission anticipates that these and other potentially problematic behaviors could be curbed by requiring such applicants to participate as a single applicant with respect to any particular geographic license area or overlapping areas.

108. Do commenters share the Commission's concern that the participation of commonly controlled applicants in an auction potentially undermines evenhandedness and transparency in the auction process? Commenters opposing the Commission's proposals should indicate how codifying its existing auction procedure and/or adopting its new proposed rule would harm the efficiency or undermine the competitiveness of the Commission's current auction process. The Commission notes that to the extent that the commonly controlled entities have an interest in holding licenses won at auction separately, such entities might consider assigning the licenses to related entities in the secondary market. Are there legitimate business reasons for filing these types of applications that the Commission has failed to consider that could be undermined by its proposal?

C. Joint Bidding

109. The Commission initiates a review of its rules and policies governing joint bidding and other arrangements in order to ensure that they fulfill its statutory objectives, given the changes in the mobile wireless marketplace since the Commission's initial adoption of its bidding rules two decades ago, and the increasing importance of spectrum for service providers to meet consumer demand for mobile wireless services. The Commission's goal in reviewing these rules and policies is to ensure that they preserve and promote competition in the mobile wireless marketplace and facilitate competition among bidders at auction, while providing potential bidders with greater clarity regarding the types of joint bidding arrangements that would be permissible.

110. Consistent with the Commission's commitment in the *Mobile Spectrum Holdings Report and Order,* it seeks to develop a record on how joint bidding and other arrangements affect competition in the mobile wireless marketplace, and the appropriate policies and procedures for substantive competitive review of joint bidding. *Policies Regarding Mobile Spectrum Holdings; Expanding the Economic and Innovation Opportunities of Spectrum Through Incentive Auctions,* 79 FR 39977, Jul. 11, 2014 *(Mobile Spectrum Holdings Report and Order).* In that regard, the Commission notes that the scope of its inquiry here—unlike its other proposals in the NPRM applies only to joint bidding and other arrangements in auctions of licenses likely to be used for mobile telephony/mobile broadband services.

111. To best serve the public interest and preserve and promote robust competition, the Commission also proposes to adopt policies tailored to the characteristics of joint bidding and other arrangements and the likely competitive effects on the mobile wireless marketplace. Specifically, the Commission tentatively concludes that it would best serve the public interest to retain the current rules governing joint bidding arrangements among non-nationwide providers and to prohibit joint bidding arrangements among nationwide providers. In addition, the Commission seeks comment on whether it should revise any of its current rules as applied to arrangements between nationwide providers and other entities, including its rules governing short-form applications. Further, the Commission seeks comment on whether any revisions to its rules governing long-form applications are necessary in light of its consideration of the potential harms and benefits of joint bidding and other arrangements.

112. *Background. Rules and Policies Governing Joint Bidding.* In 1994, the Commission adopted rules to serve the objectives of the Act by preventing parties, especially the largest firms, from agreeing in advance to bidding strategies that divide the market according to their strategic interests and disadvantage other bidders. *See Implementation of Section 309(j) of the Communications Act—Competitive Bidding,* 59 FR 22980, May 4, 1994 *(Competitive Bidding Second Report and Order).* The Commission also sought to help ensure that the government receives a fair market price for the use of the spectrum. In the *Competitive Bidding Second Report and Order,* the Commission further concluded that adopting safeguards to prevent collusive behavior

among bidders would help ensure prompt delivery of services (including to rural areas), rapid deployment of new services and technologies, development of competitive markets, and wide access to a variety of services. Moreover, the Commission observed that collusive conduct among bidders could prevent the formation of a competitive post-auction market structure. At the same time, the Commission recognized that if anticollusion rules are too strict or are not sufficiently clear, they could prevent the formation of efficiency enhancing bidding consortia that pool capital and expertise and reduce entry barriers for small firms and other entities that might not otherwise be able to compete in the auction process.

113. The Commission concluded that, in most cases, the number of bidders likely to participate in the auction, auction design safeguards, and existing antitrust law would effectively deter collusion. However, the Commission also adopted certain measures to help ensure collusion would not jeopardize the competitiveness of the auction process. Importantly, the Commission found these safeguards sufficient in the context of other competition-related determinations it had made regarding the initial licensing of Broadband PCS licenses through competitive bidding. Specifically, the Commission had set a limit on the amount of broadband PCS spectrum that the incumbent cellular licensees in each market could acquire at the upcoming PCS auctions as well as a separate limit on the amount of such spectrum that any bidder could acquire at the upcoming Broadband PCS auctions. In 1991, the Commission had adopted a cellular cross-interest rule that substantially limited any affiliation between the two cellular licensees in an area.

114. With relatively minor changes adopted since 1994, the Commission's current rules allow potential participants in a Commission auction, prior to the short-form application deadline, to enter into various kinds of agreements related to the licenses being auctioned as long as the applicants disclose on the short-form application on both the existence (but not the terms and conditions) of any joint bidding arrangements and the real-parties-in-interest to the application. After the short-form application deadline, applicants may not enter into any additional arrangements regarding the amount of bids, bidding strategies or particular licenses on which they will or will not bid, subject to certain limited exceptions, and may not communicate bidding information to other applicants for licenses in any of the same geographic areas unless those other applicant(s) were identified on the short-form application. Post-auction, winning bidders must disclose on the long-form application the specific terms, conditions, and parties involved in any agreement into which the applicant has entered, and the winning bidder must be the same entity that files the long-form application.

115. The Commission notes that it has always made clear with respect to its rules and policies governing joint bidding that conduct that is permissible under the Commission's Rules may be prohibited by the antitrust laws, review under which is subject to other and differing standards under the Sherman and Clayton Acts. Specifically, joint bidding arrangements under section 1 of the Sherman Act are prohibited if they constitute a ''contract, combination . . ., or conspiracy, in restraint of trade,'' whereas joint bidding arrangements subject to section 7 of the Clayton Act are prohibited if their effect ''may be substantially to lessen competition, or to tend to create a monopoly.'' The Commission's auction procedures public notices for specific auctions caution that compliance with the disclosure requirements of 47 CFR 1.2105(c) will not insulate a party from enforcement of the antitrust laws. Bidders who are found to have violated the antitrust laws or the Commission's rules in connection with their participation in the competitive bidding process may be subject to forfeiture, prohibition from auction participation, and other sanctions.

116. *Evolution of the Mobile Wireless Marketplace*. The Commission adopted these joint bidding rules 20 years ago when the mobile wireless industry was at a nascent stage: For example, at the end of 1994, the nationwide penetration rate for mobile wireless service was approximately 9 percent, compared to 106 percent at the end of 2011. Moreover, when the Commission adopted its joint bidding rules in 1994, it had yet to hold even the first of the numerous auctions it has conducted in its history of licenses likely to be used for mobile telephony/mobile broadband services.

117. The Commission's competitive bidding rules, as adopted in 1994, reflected the developing nature of the mobile wireless industry, as the Commission sought to promote economic growth in the ''new wireless services'' and to enhance access to telecommunication services by encouraging broad participation in the provision of spectrum-based services and ensuring that spectrum-based services are available to a wide range of consumers. In 1998, the Commission observed again that much of the mobile telephone market was still in its infancy.

118. Since 1994, and particularly in the past decade, the marketplace has changed significantly. It is no longer nascent. Consumer demand for wireless services has exploded, with the industry focus changing from the provision of mobile voice services to the provision of mobile broadband services. The adoption of smartphones and tablet computers, and the widespread use of mobile applications, combined with the increasing deployment of high-speed 3G and now 4G technologies, is driving significantly more intensive use of mobile networks and increasing providers' need for spectrum. In addition, during the past decade, the wireless marketplace has undergone significant consolidation, with a reduction from six to four nationwide providers, an increase in the market share of the major providers, and a smaller number of regional and local providers. Indeed, by December 2013, the top four facilities-based nationwide providers had combined market share of approximately 97 percent of subscribers. *See UBS Investment Research, US Wireless 411: Version 51, Mar. 18, 2014, Figure 21 at 14.*

119. Consistent with the evolution of the mobile wireless marketplace and the Commission's statutory directives and policy goals, it continues to strive to adopt policies to preserve and promote consumer choice and competition among multiple service providers, promote the efficient and intensive use of spectrum, maximize economic opportunity, and foster the deployment of innovative technologies. For instance, the Commission recently concluded in the *Mobile Spectrum Holdings Report and Order* that any mobile spectrum limit on the initial licensing of a spectrum band through competitive bidding should be articulated and applied prior to the start of the auction in order to provide bidders greater certainty regarding how many licenses they would be permitted to acquire.

120. In the *Mobile Spectrum Holdings Report and Order,* the Commission established a market-based spectrum reserve for the Incentive Auction of up to 30 megahertz in each license area, recognizing that the Incentive Auction represents a once-in-a-generation opportunity to auction significant amounts of greenfield low-band spectrum. The Commission limited nationwide providers from bidding on reserved spectrum in Partial Economic Areas (PEAs) where they hold 45 megahertz or more of suitable and

available below-1–GHz spectrum. By contrast, the Commission permitted regional and local service providers to bid on reserved spectrum in all PEAs, observing that non-nationwide service providers present a significantly lower risk of effectively denying their rivals access to low band spectrum to foreclose competition or to raise rivals' costs because of their relative lack of resources. At the same time, in the *Mobile Spectrum Holdings Report and Order,* the Commission placed no limitation on the amount of spectrum that bidders could acquire in the AWS–3 auction.

121. In the *Mobile Spectrum Holdings Report and Order,* the Commission also stated it would consider in a further notice of proposed rulemaking possible changes to certain auction rules relating to joint bidding arrangements and strategies in the Incentive Auction. The Commission here undertakes a reexamination of its auction rules on these issues, including but not limited to their application in the Incentive Auction.

122. *Discussion.* In light of the changes in the mobile wireless marketplace since the Commission adopted the current joint bidding rules 20 years ago, the Commission reviews its rules on joint bidding and other arrangements to ensure that the potential competitive harms that may arise out of such arrangements do not outweigh any public interest benefits. To best serve the public interest and preserve and promote robust competition into the foreseeable future, the Commission seeks to further its statutory objectives by adopting policies tailored to the type of arrangement and its likely competitive effect on the conduct of the auction and on the mobile wireless marketplace. Specifically, the Commission tentatively concludes that it would serve the public interest to retain the current rules governing joint bidding and other arrangements among non-nationwide providers, but to prohibit certain joint bidding and other arrangements among nationwide providers. In addition, the Commission seeks comment on whether the Commission should revise any of its current rules as applied to arrangements between nationwide providers and other entities, including its rules governing short-form applications. Further, the Commission seeks comment on whether any revisions to its rules governing long-form applications are necessary in light of its consideration of the potential harms and benefits of joint bidding and other arrangements.

123. For purposes of this proceeding, the Commission defines ''joint bidding and other arrangements'' to include any bidding consortia, joint venture, partnership, or agreement, understanding, or other arrangement entered into relating to the competitive bidding process, including any agreement relating to post-auction market structure or operation. In light of the Commission's focus on promoting and preserving competition, it considers this definition to include not only arrangements among entities that apply to bid in an auction, but also arrangements between entities that apply to bid in an auction and those entities that do not, insofar as such arrangements have the potential to affect competition in the mobile wireless telephony/mobile broadband marketplace.

124. *Competitive Effects of Joint Bidding and Other Arrangements.* When assessing the competitive effects of joint bidding and other arrangements, the Commission must ensure that its policies and rules facilitate access to spectrum in a manner that promotes competition to the benefit of consumers. As the Commission has found in the *Mobile Spectrum Holdings Report and Order,* in order for there to be robust competition, multiple competing service providers must have access to or hold sufficient spectrum to be able to enter the marketplace or expand output rapidly in response to any price increase, reduction in quality, or other competitive change that would harm consumer welfare.

125. Joint conduct or competitor collaboration that is more limited in scope and does not result in a full integration of economic activity does not end all competition between participants post bidding and is analyzed differently from joint ventures that fully integrate the participants downstream competition. The latter, in certain circumstances, may be properly analyzed as a merger. Either type of competitor collaboration however may result in procompetitive benefits and/or anticompetitive effects.

126. Because some joint bidding and other competitor collaborations contemplate competition among participants post auction, they raise the risk that the spectrum acquired through a winning bid will be allocated among the joint venture participants in a manner that could harm the public interest. Because the joint venture may be comprised of same market competitors, the arrangement may require proper safeguards to prevent the exchange of competitively sensitive price and output information, ensure independent decision making or otherwise avoid lessening competition among the participants in the downstream mobile wireless marketplace.

127. Joint bidding and other arrangements, however, also have the potential to result in procompetitive benefits if they enable participation in auctions by those otherwise without sufficient financial resources to bid, or otherwise reduce entry costs into a geographic area or enable the joint bidders to compete more robustly against other competitors in the marketplace. For example, the pooling of capital resources could allow smaller providers to better exploit financial economies of scale and enter into bidding for geographic areas that otherwise would not have been accessible, which may be particularly important given the high capital costs of network deployment and spectrum acquisition.

128. The Commission seeks comment on the foregoing analysis. The Commission's public interest review of applications for assignment of licenses through competitive bidding generally encompasses a review of the competitive effects of such assignments. In light of the changing marketplace and consistent with the Commission's recent emphasis in the *Mobile Spectrum Holdings* proceeding on the need for clearly-defined rules prior to the auction on the licenses a bidder would be permitted to acquire, the Commission seeks comment on how best to conduct its competitive review of joint bidding arrangements going forward.

129. Given the potential benefits and harms of different types of arrangements, the Commission seeks comment on the rules and procedures that should govern its review of joint bidding and other arrangements entered into relating to the competitive bidding process, including any agreement relating to post-auction market structure or operation. In addition, the Commission seeks comment on whether the distinctions as to arrangements among non-nationwide providers, among nationwide providers, and between nationwide providers and other entities—provide an effective framework for addressing the relative harms and benefits of joint bidding arrangements in light of its goal of providing clearly-defined rules for potential bidders in auctions. Further, the Commission seeks comment on whether these rules or procedures should differ in instances in which it has adopted a mobile spectrum holding limit for the initial licensing of a particular spectrum band through competitive bidding and, if so, how the type of mobile spectrum holding limit

and the statutory goals applicable to the particular auction should affect these rules and procedures.

130. For purposes of the joint bidding rules, the Commission proposes to define ''nationwide'' providers to include the providers in the U.S. with networks that cover a majority of the population and land area of the country—currently, Verizon Wireless, AT&T, Sprint and T-Mobile—with other providers being considered ''non-nationwide'' providers. The Commission seeks comment on how this definition of nationwide providers should take into account entities partially owned by Verizon Wireless, AT&T, Sprint and T-Mobile. Should the definition include entities that are ''affiliates'' (as that term is defined in its rules for attributing revenues to small businesses) of the four providers, entities with spectrum holdings that would be attributable to these four providers (as defined by its mobile spectrum holdings rules), or a category of entities defined in some other manner?

131. *Arrangements among Non-Nationwide Providers.* Considering the current competitive landscape and the need for access to spectrum by non-nationwide providers, the Commission tentatively concludes that its current rules are sufficient to prevent any potential competitive harm from outweighing the likely public interest benefits associated with allowing joint bidding and other arrangements among non-nationwide providers. For example, joint bidding and other arrangements among non-nationwide providers can better overcome the challenging capital costs of license acquisition to maintain or increase their competitive presence to the benefit of American consumers. In light of the relatively small size and scope of non-nationwide providers following substantial consolidation since the Commission's current rules were adopted, and the increased costs of spectrum and other capital expenditures necessary to provide mobile broadband service over large license areas, the Commission believes it is highly unlikely in most circumstances that such arrangements would lead to competitive harm or otherwise harm the public interest. Moreover, in the *Mobile Spectrum Holdings Report and Order,* the Commission observed that non-nationwide service providers presented a significantly lower risk of effectively denying their rivals access to spectrum in order to foreclose downstream competition or to raise rivals' costs because of their relative lack of resources. The Commission seeks comment on these views in connection with the competitive impact of joint bidding and other arrangements.

132. Commenters proposing any changes to the Commission's joint bidding rules for arrangements among non-nationwide providers should discuss why such changes are necessary to address particular competitive concerns and whether, on balance, such changes would ensure that the procompetitive benefits and bidding flexibility arising out of its current rules remain in place. In addition, the Commission seeks comment on whether any types of arrangements between non-nationwide service providers and potential new entrants would warrant closer examination of the competitive effects and, if so, whether any changes to its joint bidding rules are necessary to address any such scenarios.

133. *Arrangements among Nationwide Providers.* In contrast, the Commission tentatively concludes that joint bidding arrangements between or among nationwide providers likely would raise competitive concerns, as these arrangements would have the potential to serve as a vehicle for anticompetitive conduct by altering post auction incentives to compete, and thus, would outweigh any public interest benefits from such arrangements such as the attainment of scale or scope economies. As the Commission noted in the *Mobile Spectrum Holdings Report and Order,* the mobile wireless marketplace today is characterized by factors—such as high market concentration, high margins and high barriers to entry—that increase the potential for anticompetitive conduct. In particular, by year end 2013, the top four facilities-based nationwide providers had a combined market share, as measured by the number of subscribers or mobile wireless service revenues, of at least 97 percent.

134. Moreover, in light of these factors, joint bidding arrangements among nationwide providers would reduce the participants' ability or incentive to compete independently, which would lessen competition in the downstream mobile wireless marketplace and could harm American consumers by increasing the price or reducing the quality of mobile wireless services. Because of these greater risks of public interest harms, the Commission believes it is unlikely that the potential benefits of joint bidding arrangements among nationwide providers would outweigh these risks. The Commission seeks comment on this analysis.

135. Further, as the Commission has emphasized recently, it is important to provide bidders with certainty and clarity in advance of the start of an auction regarding whether any limitations on their ability to acquire licenses would apply. In that regard, the Commission observes that post-auction enforcement of antitrust law—envisioned as a safeguard by the Commission in 1994—may not be as well suited to preventing anti-competitive joint bidding arrangements as the bright-line prohibition the Commission proposes herein. In addition, the Commission notes that, while in 1994 bright-line prohibitions on certain types of bidding arrangements might not have been ideally suited for an industry at a nascent stage, the mobile wireless industry today is much more mature than it was in 1994. Moreover, the limit set by the Commission at that time on the amount of broadband PCS spectrum that the two incumbent cellular licensees in each market could acquire at the auctions effectively eliminated the incentives of those providers to enter into joint bidding arrangements, which would have raised significant competitive concerns.

136. Accordingly, the Commission tentatively concludes that it would best serve the public interest at this time to have a bright-line rule that would prohibit joint bidding and other arrangements among nationwide providers, including agreements to participate in an auction through a newly formed joint entity, given that such arrangements have a greater potential to harm the public interest by negatively affecting the competitive bidding process and downstream competition in the provision of mobile wireless services. The Commission seeks comment on the costs and benefits of prohibiting applications to participate in an auction that involve joint bidding and other arrangements, such as a new joint venture, between two or more nationwide providers. The Commission notes that its tentative conclusion to prohibit joint bidding and other arrangements between two nationwide providers would also include prohibiting arrangements among two nationwide providers, together with other entities.

137. *Arrangements between a Nationwide Provider and Other Entities.* The Commission seeks comment on what policies and procedures should apply to bidding arrangements between a single nationwide provider and other entities, either non-nationwide providers or potential new entrants, in order to promote competition. Under what circumstances would these arrangements raise competitive concerns? Under what circumstances

would these arrangements likely result in public interest benefits, such as the expansion of mobile wireless services in additional geographic areas and increasing access to capital by more applicants to acquire spectrum? Should any limits apply to these types of arrangements, or should the Commission continue to review these types of arrangements on a case-by-case basis?

138. If the Commission reviews these types of arrangements on a case-by-case basis, what process and factors should it use in assessing the competitive implications? The Commission's current approach for reviewing joint ventures in the context of assignment or transfer of licenses involves the determination of the appropriate market definitions and the likelihood of public interest harm from the incentive and ability of the joint venture to act anticompetitively, either unilaterally or in concert with other service providers. Should a similar approach apply to its competitive review of joint bidding arrangements? How should a case-by-case approach to review joint bidding arrangements be designed to provide clarity to potential bidders? What are the costs and benefits of Commission review of joint bidding arrangements on a case-by-case basis, including the administrative cost and burden to make such a case-by-case determination prior to the start of an auction?

139. To make case-by-case determinations regarding arrangements between nationwide providers and other entities, should the Commission modify any of its current rules that apply to the pre-auction review process? In particular, should the terms and conditions of such joint bidding arrangements be disclosed prior to the auction, in the short-form application, or even prior to the filing of that application? If so, are there changes to its rules or procedures that would be necessary to protect any confidential information? If the deadline for disclosure of terms and conditions is in advance of the short-form application deadline, how would this process be affected by the rules prohibiting certain types of communications? Commenters on this issue should include any costs or benefits to changing the rules and procedures regarding the disclosure of a joint bidding requirement.

140. If the Commission were to make a determination that the potential harms associated with a particular joint bidding arrangement outweigh the potential benefits, what remedies should it impose either at the short-form application stage or the long-form application stage? For example, should the Commission find that a short-form application is unacceptable or incomplete and bar the applicant from bidding in the auction? Should it find that an applicant at the long-form stage is unqualified to hold the license and deemed in default? Commenters proposing particular remedies should discuss the costs and benefits of such remedies.

141. *Other Issues*. The Commission's current rules require the entity that filed the short-form application to be the same entity that files the long-form application seeking consent to acquire a new license. The Commission's public interest review of long-form applications generally encompasses a review of the competitive effects of such assignments, as would its review of a secondary market transaction to disseminate licenses from a joint entity to its individual members. The Commission seeks comment on whether it is necessary to modify its current joint bidding rules, standards, and procedures that apply to the post-auction review of long-form applications or review of a secondary market transaction to disseminate licenses from a joint entity to its individual members, in order to promote competition in the mobile wireless marketplace.

142. Further, the Commission proposes to clarify a provision under 47 CFR 1.2107(g) which permits DEs to participate in an auction as a non-legally-recognizable consortium, with a requirement that each member of the consortium file separate applications for licenses covered by the winning bids of the consortium. This provision is applicable only in the DE context, where there are special provisions regarding the attribution of revenues for purposes of qualifying for bidding credits. The Commission seeks comment on this clarification.

D. Miscellaneous Part 1 Revisions

143. *Background*. Part 1, Subpart Q, of the Commission's rules generally governs competitive bidding proceedings to assign spectrum licenses. The Commission proposes changes to two of its part 1, Subpart Q, rules, 47 CFR 1.2111 and 1.2112. The Commission also intends, when it resolves the issues raised in the *Competitive Bidding NPRM,* to resolve long standing petitions for reconsideration to its part 1 competitive bidding rules.

144. *Discussion. 47 CFR 1.2111*. The Commission proposes to repeal the first two paragraphs of 47 CFR 1.2111. It proposes to repeal 47 CFR 1.2111(a), under which applicants for assignments or transfers during the first three years of a license term must provide the Commission with detailed contract and marketing information. The Commission believes that this requirement places a burden on licensees without a corresponding benefit to the Commission or the public. The Commission also proposes to repeal 47 CFR 1.2111(b), a never-used unjust enrichment payment requirement for broadband PCS C and F block set-aside licenses.

145. *47 CFR 1.2112*. The Commission's proposed changes to this rule would clarify the auction application requirements for reporting an entity's percentage ownership in the applicant and in FCC-regulated entities. The Commission proposes further changes to specify application requirements for bidding consortia. Finally, the Commission proposes to correct two errors in the rule caused by the inadvertent substitution of an incorrect paragraph in the Code of Federal Regulations publication of the rule for the correct one published in the **Federal Register** summary of the *DE Second Report and Order*. *Compare* 71 FR 26245, 26253, May 4, 2006*, with* 47 CFR 1.2112, Oct. 1, 2006. The first error was the addition of a requirement that DE short-form applicants list and summarize all their agreements that support their DE eligibility, a requirement that the Commission intended to apply only to long-form applicants. The Commission proposes to delete the requirement with respect to the short form. The second error was the deletion of a requirement that DE short-form applicants list the parties with which they have lease or resale arrangements for any of the DE applicants' spectrum licenses. The Commission proposes to reinstate this requirement.

146. The Commission seeks comment on these proposals.

E. Initial Regulatory Flexibility Analysis

147. As required by the Regulatory Flexibility Act of 1980, as amended (RFA), the Commission has prepared this Initial Regulatory Flexibility Analysis (IRFA) concerning the possible significant economic impact on small entities by the policies and rules proposed in the *Competitive Bidding NPRM.* Written public comments are requested for this IRFA. Comments to the IRFA must be identified as responses to the IRFA and filed by the deadlines for comments on the *Competitive Bidding NPRM* in the Dates section. The Commission will send a copy of the *Competitive Bidding NPRM,* including the IRFA, to the Chief

Counsel for Advocacy of the Small Business Administration.

1. Need for, and Objectives of, the Proposed Rules

148. The NPRM proposes to: (1) Provide small businesses greater opportunity to participate in the provision of a wide range of spectrum-based services by modifying the Commission's eligibility requirements, updating the standardized schedule of small business sizes, and eliminating duplicative reporting requirements, while also seeking comment on strengthening the Commission's rules to prevent the unjust enrichment of ineligible entities; (2) Amend the Commission's former defaulter rule to balance concerns that the current rule is overly broad with the Commission's continued need to ensure that auction bidders are financially reliable; (3) Codify an established competitive bidding procedure that prohibits the same individual or entity from becoming qualified to bid on the basis of more than one short-form application in a specific auction; (4) Prevent entities that are exclusively controlled by a single individual or set of individuals from becoming qualified to bid on overlapping licenses based on more than one short-form application in a specific auction; and, (5) Retain the current rules governing joint bidding arrangements among non-nationwide providers and prohibit joint bidding arrangements among nationwide providers. The NPRM also provides notice of the Commission's intention to resolve long standing petitions for reconsideration and proposes necessary clean-up revisions to the Commission's part 1 competitive bidding rules.

149. With respect to small businesses, the Commission's proposals seek to update its rules to reflect that small businesses need greater opportunities to gain access to capital so that they may have an opportunity to participate in the provision of spectrum-based services in today's communications marketplace. In the past decade, the rapid adoption of smartphones and tablet computers and the widespread use of mobile applications, combined with the increasing deployment of high-speed 3G and now 4G technologies, have driven significantly more intensive use of mobile networks. This progression from the provision of mobile voice services to the provision of mobile broadband services has increased the need for access to spectrum. In addition, in the past decade, the number of small and regional mobile wireless service providers has significantly decreased, yet regional and local service providers continue to offer consumers additional choices in the areas they serve. The Commission anticipates that by revising its rules to allow small businesses to take advantage of the same opportunities to utilize their spectrum capacity and gain access to capital as those afforded to larger licensees, the Commission can better achieve its statutory directives. Nonetheless, the Commission remains mindful of its obligation to prevent unjust enrichment of ineligible entities.

2. Description and Estimate of the Number of Small Entities To Which the Proposed Rules Will Apply

150. The RFA directs the Commission to provide a description of and, where feasible, an estimate of the number of small entities that will be affected by the proposed rules, if adopted. The RFA generally defines the term ''small entity'' as having the same meaning as the terms ''small business,'' ''small organization,'' and ''small government jurisdiction.'' In addition, the term ''small business'' has the same meaning as the term ''small business concern'' under the Small Business Act. A small business concern is one which: (1) Is independently owned and operated; (2) is not dominant in its field of operation; and (3) satisfies any additional criteria established by the SBA.

151. *Small Businesses, Small Organizations, and Small Governmental Jurisdictions.* If adopted, the NPRM's proposals may, over time, affect small entities that are not easily categorized at present. The Commission therefore describes three comprehensive, statutory small entity size standards under 5 U.S.C. 601(4). First, nationwide, there are a total of approximately 27.5 million small businesses, according to the SBA. In addition, a ''small organization'' is generally ''any not-for-profit enterprise which is independently owned and operated and is not dominant in its field.'' Nationwide, as of 2007, there were approximately 1,621,315 small organizations. Finally, the term ''small governmental jurisdiction'' is defined generally as ''governments of cities, towns, townships, villages, school districts, or special districts, with a population of less than fifty thousand.'' U.S. Census Bureau (hereinafter, Census Bureau or Census) data for 2011 indicate that there were 89,476 local governmental jurisdictions in the United States. The Commission estimates that, of this total, as many as 88,506 entities may qualify as ''small governmental jurisdictions.'' Thus, the Commission estimates that most governmental jurisdictions are small.

152. *Licenses Assigned by Auction.* The changes and additions to the Commission's rules proposed in the NPRM are of general applicability to all auctionable services. Accordingly, the IRFA provides a general analysis of the impact of the proposals on small businesses rather than a service-by-service analysis. The number of entities that may apply to participate in future Commission spectrum auctions is unknown. Moreover, the number of small businesses that have participated in prior spectrum auctions has varied. As a general matter, the number of winning bidders that qualify as small businesses at the close of an auction does not necessarily represent the number of small businesses currently in service. Also, the Commission does not generally track subsequent business size unless, in the context of changes in control, changes in material relationships or assignments or transfers, unjust enrichment issues are implicated.

153. *Wireless Telecommunications Carriers (except satellite).* The Census Bureau defines this category to include establishments engaged in operating and maintaining switching and transmission facilities to provide communications via the airwaves. Establishments in this industry have spectrum licenses and provide services using that spectrum, such as cellular phone services, paging services, wireless Internet access, and wireless video services. The SBA has developed a small business size standard for Wireless Telecommunications Carriers (except satellite). Under the SBA's standard, a business is small if it has 1,500 or fewer employees. For this category, Census data for 2007 show that there were 1,383 firms that operated for the entire year. Of this total, 1,368 firms (approximately 99%) had employment of 999 or fewer employees and only 15 (approximately 1%) had employment of 1,000 employees or more. Thus under this category and the associated small business size standard, the Commission estimates that the majority of wireless telecommunications carriers (except satellite) are small entities that may be affected by the NPRM's proposed actions.

154. *Broadband Radio Service and Educational Broadband Service.* Broadband Radio Service systems, previously referred to as Multipoint Distribution Service (MDS) and Multichannel Multipoint Distribution Service (MMDS) systems, and ''wireless cable,'' transmit video programming to subscribers and provide two-way high speed data operations using the microwave frequencies of the

Broadband Radio Service (BRS) and Educational Broadband Service (EBS) (previously referred to as the Instructional Television Fixed Service (ITFS)). In connection with the 1996 BRS auction, the Commission established a small business size standard as an entity that had annual average gross revenues of no more than $40 million in the previous three calendar years. The BRS auction resulted in 67 successful bidders obtaining licensing opportunities for 493 Basic Trading Areas (BTAs). Of the 67 auction winners, 61 met the definition of a small business. BRS also includes licensees of stations authorized prior to the auction. At this time, based on the Commission's review of licensing records, it estimates that of the 61 small business BRS auction winners, 48 remain small business licensees. In addition to the 48 small businesses that hold BTA authorizations, there are approximately 86 incumbent BRS licensees that are considered small entities (18 incumbent BRS licensees do not meet the small business size standard). After adding the number of small business auction licensees to the number of incumbent licensees not already counted, there are currently approximately 133 BRS licensees that are defined as small businesses under either the SBA or the Commission's rules. In 2009, the Commission conducted Auction 86, the sale of 78 licenses in the BRS areas. The Commission established three small business size standards that were used in Auction 86: (i) An entity with attributed average annual gross revenues that exceeded $15 million and do not exceed $40 million for the preceding three years was considered a small business; (ii) an entity with attributed average annual gross revenues that exceeded $3 million and did not exceed $15 million for the preceding three years was considered a very small business; and (iii) an entity with attributed average annual gross revenues that did not exceed $3 million for the preceding three years was considered an entrepreneur. Auction 86 concluded in 2009 with the sale of 61 licenses. Of the 10 winning bidders, two bidders that claimed small business status won four licenses; one bidder that claimed very small business status won three licenses; and two bidders that claimed entrepreneur status won six licenses. The Commission notes that, as a general matter, the number of winning bidders that qualify as small businesses at the close of an auction does not necessarily represent the number of small businesses currently in service.

155. In addition, the SBA's placement of Cable Television Distribution Services in the category of Wired Telecommunications Carriers is applicable to cable-based educational broadcasting services. Since 2007, the Census Bureau has defined Wired Telecommunications Carriers as follows: ''This industry comprises [of] establishments primarily engaged in operating and/or providing access to transmission facilities and infrastructure that they own and/or lease for the transmission of voice, data, text, sound, and video using wired telecommunications networks. Transmission facilities may be based on a single technology or a combination of technologies.'' Establishments in this industry use the wired telecommunications network facilities that they operate to provide a variety of services, such as wired telephony services, including VoIP services; wired (cable) audio and video programming distribution; and wired broadband Internet services. By exception, establishments providing satellite television distribution services using facilities and infrastructure that they operate are included in this industry. The SBA has developed a small business size standard for this category, which is: All such firms having 1,500 or fewer employees. Census data for 2007 shows that there were 3,188 firms that operated for the duration of that year. Of those, 3,144 had fewer than 1,000 employees, and 44 firms had more than 1,000 employees. Thus under this category and the associated small business size standard, the majority of such firms can be considered small. In addition to Census data, the Commission's Universal Licensing System indicates that as of July 2014, there are 2,006 active EBS licenses. The Commission estimates that of these 2,006 licenses, the majority are held by non-profit educational institutions and school districts, which are by statute defined as small businesses.

156. *Television Broadcasting.* As defined by the Census Bureau, this category ''comprises [of] establishments primarily engaged in broadcasting images together with sound. These establishments operate television broadcasting studios and facilities for the programming and transmission of programs to the public.'' The SBA has created the following small business size standard for Television Broadcasting firms: those having $38.5 million or less in annual receipts. The Commission has estimated the number of licensed commercial television stations to be 1,387. In addition, according to Commission staff review of the BIA/Kelsey, LLC's *Media Access Pro Television Database* on July 30, 2014, about 1,276 of an estimated 1,387 commercial television stations (or approximately 92 percent) had revenues of $38.5 million or less. The Commission therefore estimates that the majority of commercial television broadcasters are small entities.

157. The Commission notes, however, that in assessing whether a business concern qualifies as small, business (control) affiliations must be included. The Commission's estimates, therefore, likely overstates the number of small entities that might be affected by the NPRM's proposals because the revenue figure on which it is based does not include or aggregate revenues from affiliated companies. In addition, an element of the definition of ''small business'' is that the entity not be dominant in its field of operation. The Commission is unable at this time to define or quantify the criteria that would establish whether a specific television station is dominant in its field of operation. Accordingly, the estimate of small businesses to which rules may apply does not exclude any television station from the definition of a small business on this basis and is therefore possibly over-inclusive to that extent.

158. In addition, the Commission has estimated the number of licensed noncommercial educational (NCE) television stations to be 395. These stations are non-profit, and therefore considered to be small entities.

159. There are also 2,460 LPTV stations, including Class A stations, and 3,838 TV translator stations. Given the nature of these services, the Commission will presume that all of these entities qualify as small entities under the above SBA small business size standard.

160. *Radio Broadcasting.* The SBA defines a radio broadcast station as a small business if such station has no more than $38.5 million in annual receipts. As defined by the Census Bureau, business concerns in this industry are those ''primarily engaged in broadcasting aural programs by radio to the public.'' According to review of the BIA/Kelsey, LLC's *Media Access Pro Radio Database* as of July 30, 2014, about 11,332 (or about 99.9 percent) of 11,343 commercial radio stations have revenues of $38.5 million or less and thus qualify as small entities under the SBA definition. The Commission notes, however, that, in assessing whether a business concern qualifies as small, business (control) affiliations must be included. This estimate, therefore, likely overstates the number of small entities

that might be affected, because the revenue figure on which it is based does not include or aggregate revenues from affiliated companies.

161. In addition, an element of the definition of ''small business'' is that the entity not be dominant in its field of operation. The Commission is unable at this time to define or quantify the criteria that would establish whether a specific radio station is dominant in its field of operation. Accordingly, the estimate of small businesses to which rules may apply does not exclude any radio station from the definition of a small business on this basis and therefore may be over-inclusive to that extent. Also, as noted, an additional element of the definition of ''small business'' is that the entity must be independently owned and operated. The Commission notes that it is difficult at times to assess these criteria in the context of media entities and the estimates of small businesses to which they apply may be over-inclusive to this extent.

3. Description of Projected Reporting, Recordkeeping, and Other Compliance Requirements for Small Entities

162. *Eligibility for Bidding Credits.* The NPRM proposes changes to the Commission's process for evaluating small business eligibility for bidding credits. In particular, the NPRM proposes to repeal the AMR rule and tentatively concludes that the Commission should re-examine the need for the related decade-old policy that has limited small businesses seeking bidding credits to providing primarily retail, facilities-based service directly to the public with each of their licenses. Under the AMR, a small business applicant or licensee must automatically attribute to itself the gross revenues of any entity with which it has an ''attributable material relationship.'' An applicant or licensee has an AMR when it has one or more agreements with any individual entity for the lease (under either spectrum manager or *de facto* transfer leasing arrangements) or resale (including under a wholesale arrangement) of, on a cumulative basis, more than 25 percent of the spectrum capacity of any individual license held by the applicant or licensee. The NPRM seeks comment on the proposal to repeal the AMR rule, and the Commission's tentative conclusions regarding its need to re-evaluate its small business policy. Alternatively, the NPRM also seeks comment on retaining the Commission's small business policy and/or some variation of the AMR rule. For instance, the NPRM seeks comment on whether the Commission should adopt a rule with some other spectrum capacity use limit that would render an applicant ineligible for all current and future benefits.

163. The NPRM also proposes to adopt a more flexible approach under which the Commission would evaluate small business eligibility on a license-by-license basis, using a two-pronged test. The first prong would evaluate whether an applicant meets the applicable small business size standard and is therefore eligible for benefits. To evaluate small business eligibility, the NPRM proposes to apply the Commission's existing controlling interest standard and affiliation rules to determine whether, an entity should be attributable based on whether that entity has *de jure* or *de facto* control of, or is affiliated with, the applicant's overall business venture. Once the first prong has been met, the Commission would evaluate eligibility under the second prong. Under the second prong, the NPRM proposes to determine an entity's eligibility to retain small business benefits on a license-by-license basis, based on whether it has maintained *de jure* and *de facto* control of the license. Under this proposed license-by-license approach, an entity will not necessarily lose its eligibility for all current and future small business benefits solely because of a decision associated with any particular license. Instead, while a small business might incur unjust enrichment obligations if it relinquishes *de jure* or *de facto* control of any particular license for which it claimed benefits, so long as the revenues of its attributable interest holders (i.e., the DE's affiliates, its controlling interests, and the affiliates of its controlling interests) continue to qualify under the relevant small business size standard, it could still retain its eligibility to retain current and future benefits on existing and future licenses. The NPRM seeks comment on the proposed two-pronged approach to evaluate attribution and establish eligibility for small business benefits.

164. The NPRM also proposes to modify the Commission's secondary market rules to comport with the Commission's proposed approach to assessing small business eligibility. Specifically, the NPRM proposes to modify the language in 47 CFR 1.9020(d)(4) to remove the conflicting reference to the control standard of 47 CFR 1.2110 in order to make clear that small business lessors are fully subject to the same *de facto* control standard for spectrum manager leasing that applies to all other licensees. This modification should clarify that 47 CFR 1.9010 alone defines whether a licensee, including a small business, retains *de facto* control of the spectrum that it leases to a spectrum lessee in the context of spectrum manager leasing.

165. The NPRM seeks comment on whether any changes are appropriate to the Commission's unjust enrichment rules that provide additional safeguards by requiring repayment of small business benefits where an applicant loses eligibility for any reason. Specifically, the NPRM invites comment on, among other things, whether to adjust the Commission's current five year unjust enrichment schedule either in terms of the duration of the requirements or the percentages of the repayment schedule. The NPRM also seeks comment on how best the Commission can continue to scrutinize applications and proposed transactions to ensure that only eligible entities receive benefits, while not undermining the Act's directive to ensure that DEs are given the opportunity to participate in the provision of spectrum-based services. Specifically, the NPRM seeks comment on adopting a 10 year unjust enrichment repayment schedule similar to the one it adopted in 2006, but vacated by the Third Circuit for lack of notice.

166. *Bidding Credits.* The NPRM examines the primary way that the Commission facilitates participation by small businesses at auction through its bidding credit program. Bidding credits operate as a percentage discount on the winning bid amounts of a qualifying small business. By making the acquisition of spectrum licenses more affordable for new and existing small businesses, bidding credits facilitate their access to needed capital. The Commission establishes eligibility for bidding credits for each auctionable service, adopting one or more definitions of the small businesses that will be eligible. The Commission's small business definitions have been based on an applicant's average annual gross revenues over a three-year period. The NPRM proposes to increase the general schedule of size standards in its part 1 rules, measured by gross revenues, for purposes of determining an entity's eligibility for a bidding preference. Specifically, the NPRM proposes to revise the standardized schedule in 47 CFR 1.2110(f) as follows: (1) Businesses with average annual gross revenues for the preceding three years not exceeding $4 million would be eligible for a 35 percent bidding credit; (2) Businesses with average annual gross revenues for the preceding three years not exceeding $20 million would be eligible for a 25 percent bidding credit; and (3) Businesses with average annual gross

revenues for the preceding three years not exceeding $55 million would be eligible for a 15 percent bidding credit. The NPRM also asks about alternative methods for setting new gross revenues thresholds.

167. The NPRM seeks comment on whether to adopt a small business size standard based on criteria other than gross revenues, and proposes to continue the Commission's practice of evaluating which small business definitions will apply on a service-by-service basis, based upon associated capital requirements for a particular service. In addition, the NPRM seeks comment on whether to increase the bidding credit percentages (i.e., discount amounts) applicable to associated small business categories. The NPRM also seeks comment on whether any revisions the Commission adopts in this proceeding to its part 1 schedule of small business size standards and associated bidding credit percentage levels should apply to the specific small business definitions and bidding credit percentages the Commission previously adopted for specific services, and, if so, how such revisions would be implemented. The NPRM proposes that any new rules adopted in this proceeding would apply to the 600 MHz band spectrum licenses to be offered in the BIA. In the BIA proceeding, the Commission adopted a 15 percent bidding credit for small businesses (defined as entities with average annual gross revenues for the preceding three years not exceeding $40 million) and a 25 percent bidding credit for very small businesses (defined as entities with average annual gross revenues for the preceding three years not exceeding $15 million). Accordingly, the NPRM proposes to adopt, for the 600 MHz band, increases in the gross revenues thresholds associated with the 25 percent and 15 percent bidding credits that are consistent with the increased gross revenues thresholds proposed in the NPRM for the standardized schedule in the Commission's part 1 competitive bidding rules. The NPRM also seeks comment on whether the Commission should adopt a third small business bidding credit tier for the 600 MHz band that would provide a 35 percent bidding credit to businesses with average gross revenues for the preceding three years not exceeding $4 million.

168. Further, the NPRM seeks comment on the Commission's ability to consider bidding preferences for other types of DEs, entities that serve unserved/underserved areas or areas with persistent poverty, as well as persons or entities that have overcome disadvantages. The NPRM asks commenters to specifically address the statutory authority and judicial scrutiny issues that may limit the Commission's ability to entertain recommendations to alter the focus of its current bidding preferences by offering bidding preferences to entities based on other criteria than business size.

169. The Commission expects that the questions raised in the NPRM will provide a meaningful opportunity to evaluate whether its bidding credit program continues to achieve the Commission's objectives. To facilitate the Commission's review, the NPRM seeks concrete, specific, data-driven feedback by commenters. In addition, the NPRM invites commenters to suggest other creative ideas that would promote the Commission's statutory objectives, but emphasizes that for any such proposals it is imperative to provide ample supporting evidence.

170. *DE Reporting Requirements.* The NPRM proposes to eliminate the DE annual reporting requirement in 47 CFR 1.2110(n) and questions whether the value of the information provided in those reports outweighs the regulatory burden that the reporting obligation places on small businesses. The NPRM seeks comment on this proposal. Among other things, the NPRM asks if the Commission adopts the proposal to eliminate this annual reporting requirement, whether it should amend its rule for reporting eligibility events to require that a small business must list and summarize all existing agreements to provide context each time it reports a new eligibility event.

171. *MMTC White Paper Requests.* In February 2014, MMTC submitted a White Paper detailing several policy recommendations to advance licensing of spectrum to minority- and women-owned businesses. The NPRM raises and addresses several of these issues and seeks comments on the other proposals that are not otherwise addressed in the NPRM, and to the extent that they relate to the Commission's competitive bidding rules. The NPRM observes that certain proposals appear to be outside the scope of this proceeding and others may not be needed in light of other changes proposed in the NPRM. Toward that end, the NPRM tentatively concludes that the following MMTC proposals are outside the scope of this proceeding, which is focused on the Commission's competitive bidding rules, and thus will not be addressed in the NPRM: (1) Incorporating diversity and inclusion in the Commission's public interest analysis of mergers and acquisitions and secondary market spectrum transactions; and (2) supporting increased funding for and statutory amendments regarding the Telecommunications Development Fund.

172. *Former Defaulter Rule.* The NPRM proposes changes to the Commission's former defaulter rule to balance concerns that the current rule is overly broad with the Commission's continued need to ensure that auction bidders are financially reliable. The NPRM seeks comment on revising the rule to narrow the scope of the defaults and delinquencies that will be considered in determining whether or not an auction participant is a former defaulter. Specifically, the NPRM proposes to exclude any cured default on any Commission license or delinquency on any non-tax debt owed to any federal agency for which any of the following criteria are met: (1) The notice of the final payment deadline or delinquency was received more than seven years before the relevant short-form application deadline; (2) the default or delinquency amounted to less than $100,000; (3) the default or delinquency was paid within two quarters (i.e., 6 months) after receiving the notice of the final payment deadline or delinquency; or (4) the default or delinquency was the subject of a legal or arbitration proceeding that was cured upon resolution of the proceeding. Additionally, the NPRM seeks comment on limiting the individuals and entities that an applicant must consider when determining its status as a former defaulter.

173. *Commonly Controlled Entities.* The NPRM proposes to codify an established competitive bidding procedure that prohibits the same individual or entity from filing more than one short-form application to participate in an auction. The NPRM also proposes a new rule that would prevent entities that are exclusively controlled by a single individual or set of individuals from qualifying to bid on licenses in the same or overlapping geographic areas in a specific auction on more than one short-form application. These proposals seek to improve the transparency and efficiency of the auction process, by making clearer who the qualified bidders actually are and ensuring against the potential for anticompetitive auction behavior. The NPRM seeks comment on these proposals and on specific alternatives to address the Commission's concern that common control may allow the controlling individual or set of individuals to attempt to gain advantages in the bidding process based

on certain coordinated bidding actions (e.g., tied bids, activity waivers).

174. *Joint Bidding.* The NPRM initiates a review of the Commission's rules and policies governing joint bidding and other arrangements in order to ensure that they fulfill the Commission's statutory objectives, given the changes in the mobile wireless marketplace since the initial adoption of the bidding rules two decades ago, and the increasing importance of spectrum for service providers to meet consumer demand for mobile wireless services. The NPRM seeks comment on the Commission's tentative conclusions that it would be in the public interest to retain the current rules governing joint bidding arrangements among non-nationwide providers and to prohibit joint bidding arrangements among nationwide providers. Additionally, the NPRM seeks comment on whether the Commission should revise any of its current rules as applied to arrangements between nationwide providers and other entities, including its rules governing short-form applications. Further, the NPRM seeks comment on whether any revisions to the Commission's rules governing long-form applications are necessary in light of the Commission's consideration of the potential harms and benefits of joint bidding and other arrangements.

175. *Miscellaneous Part 1 Revisions.* In addition to changes that would implement the foregoing proposals, the NPRM proposes changes to two of the Commission's part 1, Subpart Q, rules, 47 CFR 1.2111 and 1.2112. *47 CFR 1.2111*—The NPRM proposes to eliminate two provisions of this rule: (1) 47 CFR 1.2111(a), under which applicants for assignments or transfers during the first three years of a license term must provide the Commission with detailed contract and marketing information, and (2) 47 CFR 1.2111(b), a never-used unjust enrichment payment requirement for broadband PCS C and F block set-aside licenses. *47 CFR 1.2112*—The NPRM's proposed changes to this rule clarify the auction application requirements for reporting an entity's percentage ownership in the applicant and in FCC-regulated entities. The NPRM proposes further changes to specify application requirements for bidding consortia. The NPRM also proposes to correct two errors in the rule caused by the inadvertent substitution of an incorrect paragraph in the Code of Federal Regulations publication of the rule for the correct one published in the **Federal Register** summary of the *DE Second Report and Order.* The first error was the addition of a requirement that DE short-form applicants list and summarize all their agreements that support their DE eligibility, a requirement that the Commission intended to apply only to long-form applicants. The NPRM proposes to delete the requirement with respect to the short-form. The second error was the deletion of a requirement that DE short-form applicants list the parties with which they have lease or resale arrangements for any of the DE applicants' spectrum. The NPRM proposes to reinstate this requirement.

176. The NPRM seeks comments on these proposals. In addition, the NPRM notes that the Commission intends, when it resolves the issues raised in the NPRM, to resolve long standing petitions for reconsideration to the Commission's part 1 competitive bidding rules.

4. Steps Taken To Minimize Significant Economic Impact on Small Entities, and Significant Alternatives Considered

177. The RFA requires an agency to describe any significant alternatives that it has considered in reaching its proposed approach, which may include the following four alternatives (among others): (1) The establishment of differing compliance or reporting requirements or timetables that take into account the resources available to small entities; (2) the clarification, consolidation, or simplification of compliance or reporting requirements under the rule for small entities; (3) the use of performance, rather than design, standards; and (4) an exemption from coverage of the rule, or any part thereof, for small entities.

178. If adopted, the NPRM's proposed approach to evaluating attribution and establishing small business eligibility could provide small businesses with greater opportunities to participate in the provision of spectrum-based services. Moreover, insofar as the NPRM's proposals should allow small businesses greater flexibility to engage in business ventures that include increased forms of leasing and other spectrum use arrangements, the Commission anticipates that the combined intent of the proposals should increase the potential sources of revenue for the small business and decrease the likelihood that it would be subject to undue influence by any particular user of a single license. The NPRM's proposed two-pronged approach to establishing small business eligibility would also ensure that a licensee retains control of all licenses for which it seeks bidding credits, while providing greater flexibility for any acquired without such benefits. Further, the proposal to eliminate the AMR rule and to clarify how spectrum manager leasing rules apply to DEs should allow small businesses greater certainty to participate in secondary markets transactions.

179. The NPRM's proposed increases in the gross revenues thresholds that define the three tiers of small businesses in the part 1 schedule by which the Commission provides the corresponding available bidding credits would encourage small business participation in spectrum license auctions. The proposed gross revenues thresholds are intended to more accurately reflect what constitutes a ''small business'' in today's marketplace, taking into consideration the relative size of the large, national providers. This proposal will provide an economic benefit to small entities by making it easier to acquire spectrum licenses. Moreover, the NPRM's proposal to repeal the DE reporting requirement would eliminate the burden on DEs to submit annual reports.

180. The proposed changes to the part 1 rules will apply to all entities in the same manner the Commission will apply these changes uniformly to all entities that choose to participate in spectrum license auctions. The Commission believes that applying the same rules equally to all entities in these contexts promotes fairness. The Commission does not believe that the limited costs and/or administrative burdens associated with the rule revisions will unduly burden small entities. In fact, many of the proposed rule revisions clarify the Commission's competitive bidding rules, including short-form application requirements, as well as reduce reporting requirements.

181. Finally, the NPRM's joint bidding proposals are intended to preserve and promote robust competition in the mobile wireless marketplace and facilitate competition among bidders at auction, including small entities. These proposals provide potential bidders with greater clarity regarding the types of joint bidding arrangements that would be permissible. In addition, the NPRM's proposal to retain its current rules for joint bidding arrangements among non-nationwide providers would maintain flexibility for small businesses to enter into such arrangements.

List of Subjects

47 CFR Part 1

Administrative practice and procedure.

47 CFR Part 27

Communications common carriers, Radio.

Federal Communications Commission.

Marlene H. Dortch,

Secretary.

Proposed Rules

For the reasons discussed in the preamble, the Federal Communications Commission proposes to amend 47 CFR Parts 1 and 27 as follows:

PART 1—PRACTICE AND PROCEDURE

■ 1. The authority citation for part 1 continues to read as follows:

Authority: 15 U.S.C. 79 *et seq.;* 47 U.S.C. 151, 154(i), 154(j), 155, 157, 225, 227, 303(r), 309, 1403, 1404, 1451, and 1452.

■ 2. Section 1.2105 is amended by revising paragraphs (a)(2)(xi) and (b)(1) to read as follows:

§ 1.2105 Bidding application and certification procedures; prohibition of certain communications.

* * * * *

(a) * * *

(2) * * *

(xi) An attached statement made under penalty of perjury indicating whether or not the applicant has been in default on any Commission license or has been delinquent on any non-tax debt owed to any Federal agency. For purposes of this certification, an applicant may exclude from consideration as a former default any default on a Commission license or delinquency on non-tax debt to any Federal agency that has been resolved and meets any of the following criteria:

(A) The notice of the final payment deadline or delinquency was received more than seven years before the short-form application deadline;

(B) The default or delinquency amounted to less than $100,000;

(C) The default or delinquency was paid within two quarters (i.e., 6 months) after receiving the notice of the final payment deadline or delinquency; or

(D) The default or delinquency was the subject of a legal or arbitration proceeding that was cured upon resolution of the proceeding.

* * * * *

(b) *Modification and Dismissal of Short-Form Application (FCC Form 175).*

(1)(i) Any short-form application (FCC Form 175) that does not contain all of the certifications required pursuant to this section is unacceptable for filing and cannot be corrected subsequent to the applicable filing deadline. The application will be deemed incomplete, the applicant will not be found qualified to bid, and the upfront payment, if paid, will be returned.

(ii) If (A) An individual or entity submits multiple applications in a single auction; or

(B) Entities commonly controlled by the same individual or same set of individuals submit applications for any set of licenses in the same or overlapping geographic areas in a single auction; then only one of such applications may be deemed complete, and the other such application(s) will be deemed incomplete, such applicants will not be found qualified to bid, and the associated upfront payment(s), if paid, will be returned.

* * * * *

■ 3. Section 1.2106 is amended by revising paragraph (a) to read as follows:

§ 1.2106 Submission of upfront payments.

(a) The Commission may require applicants for licenses subject to competitive bidding to submit an upfront payment. In that event, the amount of the upfront payment and the procedures for submitting it will be set forth in a Public Notice. Any auction applicant that, pursuant to § 1.2105(a)(2)(xi), certifies that it is a former defaulter must submit an upfront payment equal to 50 percent more than that set for each particular license. No interest will be paid on upfront payments.

* * * * *

■ 4. Amend § 1.2110 as follows:

■ A. *Revise paragraph (b)(1)(i) and (ii);*

■ B. *Remove paragraph (b)(3)(iv);*

■ C. *Revise paragraphs (f)(2) and (j);*

■ D. *Remove paragraph (n);*

■ E. *Redesignate paragraphs (o) and (p) as paragraphs (n) and (o)*

The additions and revisions read as follows:

§ 1.2110 Designated entities.

* * * * *

(b) * * *

(1) * * *

(i) The gross revenues of the applicant (or licensee), its affiliates, its controlling interests, and the affiliates of its controlling interests shall be attributed to the applicant (or licensee) and considered on a cumulative basis and aggregated for purposes of determining whether the applicant (or licensee) is eligible for status as a small business, very small business, or entrepreneur, as those terms are defined in the service-specific rules. An applicant seeking status as a small business, very small business, or entrepreneur, as those terms are defined in the service-specific rules, must disclose on its short- and long-form applications, separately and in the aggregate, the gross revenues for each of the previous three years of the applicant (or licensee), its affiliates, its controlling interests, and the affiliates of its controlling interests.

(ii) If applicable, pursuant to § 24.709 of this chapter, the total assets of the applicant (or licensee), its affiliates, its controlling interests, and the affiliates of its controlling interests shall be attributed to the applicant (or licensee) and considered on a cumulative basis and aggregated for purposes of determining whether the applicant (or licensee) is eligible for status as an entrepreneur. An applicant seeking status as an entrepreneur must disclose on its short- and long-form applications, separately and in the aggregate, the gross revenues for each of the previous two years of the applicant (or licensee), its affiliates, its controlling interests, and the affiliates of its controlling interests.

* * * * *

(f) * * *

(2) *Size of bidding credits.* A winning bidder that qualifies as a small business may use the following bidding credits corresponding to its respective average gross revenues for the preceding 3 years:

(i) Businesses with average gross revenues for the preceding 3 years not exceeding $4 million are eligible for bidding credits of 35 percent;

(ii) Businesses with average gross revenues for the preceding 3 years not exceeding $20 million are eligible for bidding credits of 25 percent; and

(iii) Businesses with average gross revenues for the preceding 3 years not exceeding $55 million are eligible for bidding credits of 15 percent.

* * * * *

(j) Designated entities must describe on their long-form applications how they satisfy the requirements for eligibility for designated entity status, and must list and summarize on their long form applications all agreements that affect designated entity status such as partnership agreements, shareholder agreements, management agreements, spectrum leasing arrangements, spectrum resale (including wholesale) arrangements, and all other agreements including oral agreements, establishing as applicable, *de facto* or *de jure* control of the entity. Designated entities also must provide the date(s) on which they entered into of the agreements listed. In addition, designated entities must file with their long-form applications a copy of each such agreement. In order to enable the Commission to audit designated entity eligibility on an ongoing basis, designated entities that are awarded eligibility must, for the term of the license, maintain at their facilities or with their designated agents the lists, summaries, dates and copies of

agreements required to be identified and provided to the Commission pursuant to this paragraph and to § 1.2114.

* * * * *

■ 5. Section 1.2111 is revised to read as follows:

§ 1.2111 Assignment or transfer of control: unnjust enrichment.

(a) *Unjust enrichment payment: installment financing.*

(1) If a licensee that utilizes installment financing under this section seeks to assign or transfer control of its license to an entity not meeting the eligibility standards for installment payments, the licensee must make full payment of the remaining unpaid principal and any unpaid interest accrued through the date of assignment or transfer as a condition of approval.

(2) If a licensee that utilizes installment financing under this section seeks to make any change in ownership structure that would result in the licensee's losing eligibility for installment payments, the licensee shall first seek Commission approval and must make full payment of the remaining unpaid principal and any unpaid interest accrued through the date of such change as a condition of approval. A licensee's (or other attributable entity's) increased gross revenues or increased total assets due to nonattributable equity investments, debt financing, revenue from operations or other investments, business development or expanded service shall not be considered to result in the licensee losing eligibility for installment payments.

(3) If a licensee seeks to make any change in ownership that would result in the licensee's qualifying for a less favorable installment plan under this section, the licensee shall seek Commission approval and must adjust its payment plan to reflect its new eligibility status. A licensee may not switch its payment plan to a more favorable plan.

(b) *Unjust enrichment payment: bidding credits.*

(1) A licensee that utilizes a bidding credit, and that during the initial term seeks to assign or transfer control of a license to an entity that does not meet the eligibility criteria for a bidding credit, will be required to reimburse the U.S. Government for the amount of the bidding credit, plus interest based on the rate for ten year U.S. Treasury obligations applicable on the date the license was granted, as a condition of Commission approval of the assignment or transfer. If, within the initial term of the license, a licensee that utilizes a bidding credit seeks to assign or transfer control of a license to an entity that is eligible for a lower bidding credit, the difference between the bidding credit obtained by the assigning party and the bidding credit for which the acquiring party would qualify, plus interest based on the rate for ten year U.S. treasury obligations applicable on the date the license is granted, must be paid to the U.S. Government as a condition of Commission approval of the assignment or transfer. If, within the initial term of the license, a licensee that utilizes a bidding credit makes any ownership change or enters into any agreement that would result in the licensee's losing eligibility for a bidding credit (or qualifying for a lower bidding credit), the amount of the bidding credit (or the difference between the bidding credit originally obtained and the bidding credit for which the licensee would qualify after restructuring or under the agreement), plus interest based on the rate for ten year U.S. treasury obligations applicable on the date the license is granted, must be paid to the U.S. Government as a condition of Commission approval of the assignment or transfer or of a reportable eligibility event (see § 1.2114).

(2) *Payment schedule.*

(i) The amount of payments made pursuant to paragraph (b)(1) of this section will be reduced over time as follows:

(A) A loss of eligibility in the first two years of the license term will result in a forfeiture of 100 percent of the value of the bidding credit (or in the case of very small businesses transferring to small businesses, 100 percent of the difference between the bidding credit received by the former and the bidding credit for which the latter is eligible);

(B) A loss of eligibility in year 3 of the license term will result in a forfeiture of 75 percent of the value of the bidding credit (or in the case of eligibility changing to qualify for a lower bidding credit, 75 percent of the difference between the bidding credit received and the bidding credit for which it is eligible);

(C) A loss of eligibility in year 4 of the license term will result in a forfeiture of 50 percent of the value of the bidding credit (or in the case of eligibility changing to qualify for a lower bidding credit, 50 percent of the difference between the bidding credit received and the bidding credit for which it is eligible);

(D) A loss of eligibility in year 5 of the license term will result in a forfeiture of 25 percent of the value of the bidding credit (or in the case of eligibility changing to qualify for a lower bidding credit, 25 percent of the difference between the bidding credit received and the bidding credit for which it is eligible); and

(E) For a loss of eligibility in year 6 or thereafter, there will be no payment.

(ii) These payments will have to be paid to the United States Treasury as a condition of approval of the assignment, transfer, ownership change or reportable eligibility event (see § 1.2114).

(c) *Unjust enrichment: partitioning and disaggregation*—

(1) *Installment payments.* Licensees making installment payments, that partition their licenses or disaggregate their spectrum to entities not meeting the eligibility standards for installment payments, will be subject to the provisions concerning unjust enrichment as set forth in this section.

(2) *Bidding credits.* Licensees that received a bidding credit that partition their licenses or disaggregate their spectrum to entities not meeting the eligibility standards for such a bidding credit, will be subject to the provisions concerning unjust enrichment as set forth in this section.

(3) *Apportioning unjust enrichment payments.* Unjust enrichment payments for partitioned license areas shall be calculated based upon the ratio of the population of the partitioned license area to the overall population of the license area and by utilizing the most recent Census data. Unjust enrichment payments for disaggregated spectrum shall be calculated based upon the ratio of the amount of spectrum disaggregated to the amount of spectrum held by the licensee.

■ 6. Section 1.2112 is amended by revising paragraphs (a)(7), (b)(1)(iii) and (iv); adding paragraph (b)(1)(v); and revising paragraph (b)(2)(ii), (iii) and (v) to read as follows:

§ 1.2112 Ownership disclosure requirements for applications.

(a) * * *

(7) List any FCC-regulated entity or applicant for an FCC license, in which the applicant or any of the parties identified in paragraphs (a)(1) through (a)(5) of this section holds a 10 percent or greater ownership interest, regardless of the type of business entity, including both active and passive interests. This list must include a description of each such entity's principal business and a description of each such entity's relationship to the applicant (e.g., Company A owns 10 percent of Company B (the applicant) and 10 percent of Company C, then Companies A and C must be listed on Company B's application, where C is an FCC licensee and/or license applicant).

(b) * * *

(1) * * *

(iii) List all parties with which the applicant has entered into arrangements for the spectrum lease or resale (including wholesale arrangements) of any of the capacity of any of the applicant's spectrum.

(iv) List separately and in the aggregate the gross revenues, computed in accordance with § 1.2110, for each of the following: The applicant, its affiliates, its controlling interests, and the affiliates of its controlling interests; and if a consortium of small businesses, the members comprising the consortium.

(v) If applying as a consortium under § 1.2110(b)(3)(i), provide the information in paragraphs (b)(1)(i) through (iv) separately for each member of the consortium.

(2) * * *

(ii) List any FCC-regulated entity or applicant for an FCC license, in which any controlling interest of the applicant owns a 10 percent or greater interest or a total of 10 percent or more of any class of stock, warrants, options or debt securities. This list must include a description of each such entity's principal business and a description of each such entity's relationship to the applicant;

(iii) List and summarize all agreements or instruments (with appropriate references to specific provisions in the text of such agreements and instruments) that support the applicant's eligibility as a small business under the applicable designated entity provisions, including the establishment of *de facto* or *de jure* control. Such agreements and instruments include articles of incorporation and by-laws, partnership agreements, shareholder agreements, voting or other trust agreements, management agreements, franchise agreements, spectrum leasing arrangements, spectrum resale (including wholesale) arrangements, and any other relevant agreements (including letters of intent), oral or written;

* * * * *

(v) List separately and in the aggregate the gross revenues, computed in accordance with § 1.2110, for each of the following: The applicant, its affiliates, its controlling interests, and affiliates of its controlling interests; and if a consortium of small businesses, the members comprising the consortium; and

* * * * *

■ 7. Section 1.9020 is amended by revising paragraph (d)(4) to read as follows:

§ 1.9020 Spectrum manager leasing arrangements.

* * * * *

(d) * * *

(4) *Designated entity/entrepreneur rules.* A licensee that holds a license pursuant to small business and/or entrepreneur provisions (see § 1.2110 and § 24.709 of this chapter) and continues to be subject to unjust enrichment requirements (see § 1.2111 and § 24.714 of this chapter) and/or transfer restrictions (see § 24.839 of this chapter) may enter into a spectrum manager leasing arrangement with a spectrum lessee, regardless of whether the spectrum lessee meets the Commission's designated entity eligibility requirements (see § 1.2110) or its entrepreneur eligibility requirements to hold certain C and F block licenses in the broadband personal communications services (see § 1.2110 and § 24.709 of this chapter), so long as the spectrum manager leasing arrangement does not result in the spectrum lessee's becoming a ''controlling interest'' or ''affiliate'' (see § 1.2110) of the licensee such that the licensee would lose its eligibility as a designated entity or entrepreneur.

* * * * *

PART 27—MISCELLANEOUS WIRELESS COMMUNICATIONS SERVICES

■ 8. The authority citation for part 27 continues to read as follows:

Authority: 47 U.S.C. 154, 301, 302a, 303, 307, 309, 332, 336, 337, 1403, 1404, 1451, and 1452, unless otherwise noted.

■ 9. Section 27.1301 is amended by removing the undesignated introductory text and revising paragraph (a) to read as follows:

§ 27.1301 Designated entities in the 600 MHz band.

(a) *Eligibility for small business provisions.*

(1) A small business is an entity that, together with its affiliates, its controlling interests, the affiliates of its controlling interests, and the entities with which it has an attributable material relationship, has average gross revenues not exceeding $55 million for the preceding three (3) years.

(2) A very small business is an entity that, together with its affiliates, its controlling interests, the affiliates of its controlling interests, and the entities with which it has an attributable material relationship, has average gross revenues not exceeding $20 million for the preceding three (3) years.

* * * * *

[FR Doc. 2014–26924 Filed 11–13–14; 8:45 am]

BILLING CODE 6712–01–P

DEPARTMENT OF COMMERCE

National Oceanic and Atmospheric Administration

50 CFR Part 648

[Docket No. 140902739–4739–01]

RIN 0648–BE49

Fisheries of the Northeastern United States; Atlantic Mackerel, Squid, and Butterfish Fisheries; Specifications and Management Measures

AGENCY: National Marine Fisheries Service (NMFS), National Oceanic and Atmospheric Administration (NOAA), Commerce.

ACTION: Proposed rule, request for comments.

SUMMARY: NMFS proposes 2015 specifications and management measures for Atlantic mackerel, 2015–2017 specifications for *Illex* squid, 2015–2017 specifications for longfin squid, and 2015–2017 specifications for butterfish. This action also proposes simplifying the butterfish fishery closure mechanism. These proposed specifications and management measures are intended to promote the utilization and conservation of the Atlantic mackerel, squid, and butterfish resources.

DATES: Public comments must be received no later than 5 p.m., eastern standard time, on December 15, 2014.

ADDRESSES: Copies of supporting documents used by the Mid-Atlantic Fishery Management Council, including the Environmental Assessment (EA) and Regulatory Impact Review (RIR)/Initial Regulatory Flexibility Analysis (IRFA), are available from: Dr. Christopher M. Moore, Executive Director, Mid-Atlantic Fishery Management Council, Suite 201, 800 N. State Street, Dover, DE 19901. The EA/RIR/IRFA is accessible via the Internet at *http://h http://www.greateratlantic.fisheries.noaa.gov/.*

You may submit comments, identified by NOAA–NMFS–2014–0139, by any one of the following methods:

• *Electronic Submission:* Submit all electronic public comments via the Federal e-Rulemaking Portal *www.regulations.gov.* To submit comments via the e-Rulemaking Portal, first click the ''submit a comment'' icon, then enter NOAA–NMFS–2014–0139 in

the keyword search. Locate the document you wish to comment on from the resulting list and click on the ''Submit a Comment'' icon on the right of that line.

• Mail to NMFS, Greater Atlantic Regional Fisheries Office, 55 Great Republic Dr, Gloucester, MA 01930. Mark the outside of the envelope ''Comments on 2015 Mackerel, Squid and Butterfish Specifications.''

• *Fax:* (978) 281–9135, Attn: Aja Szumylo.

Instructions: Comments must be submitted by one of the above methods to ensure that the comments are received, documented, and considered by NMFS. Comments sent by any other method, to any other address or individual, or received after the end of the comment period, may not be considered. All comments received are a part of the public record and will generally be posted for public viewing on *www.regulations.gov* without change. All personal identifying information (e.g., name, address, etc.) submitted voluntarily by the sender will be publicly accessible. Do not submit confidential business information, or otherwise sensitive or protected information. NMFS will accept anonymous comments (enter ''N/A'' in the required fields if you wish to remain anonymous). Attachments to electronic comments will be accepted in Microsoft Word or Excel, WordPerfect, or Adobe PDF file formats only.

FOR FURTHER INFORMATION CONTACT: Aja Szumylo, Fishery Policy Analyst, 978-281–9195, fax 978–281–9135.

SUPPLEMENTARY INFORMATION:

Background

This rule proposes specifications, which are the combined suite of commercial and recreational catch levels established for one or more fishing years. The specifications process also allows for the modification of a select number of management measures, such as closure thresholds, gear restrictions, and possession limits. The Council's process for establishing specifications relies on provisions within the Atlantic Mackerel, Squid and Butterfish Fishery Management Plan (FMP) and its implementing regulations, as well as requirements established by the Magnuson-Stevens Fishery Conservation and Management Act. Specifically, section 302(g)(1)(B) of the Magnuson-Stevens Act states that the Scientific and Statistical Committee (SSC) for each Regional Fishery Management Council shall provide its Council ongoing scientific advice for fishery management decisions, including recommendations for acceptable biological catch (ABC), preventing overfishing, maximum sustainable yield, and achieving rebuilding targets. The ABC is a level of catch that accounts for the scientific uncertainty in the estimate of the stock's defined overfishing level (OFL). The Council's SSC met on May 7 and 8, 2014, to recommend ABCs for the 2015 Atlantic mackerel specifications, and the 2015–2017 butterfish, *Illex* squid, and longfin squid specifications.

The FMP's implementing regulations require the Council's Mackerel, Squid, and Butterfish Monitoring Committee to consider and develop specification recommendations for each species. Since the Magnuson-Stevens Act requirements for the SSC to recommend ABC became effective, the monitoring committees' role has largely been to recommend any reduction in catch limits from the SSC-recommended ABCs to account for management uncertainty, and to recommend other management measures (e.g., gear and/or possession restrictions) needed for the efficient management of the fishery. The Monitoring Committee met via webinar on May 13 and 27, 2014, to discuss recommendations for the 2015 mackerel fishery, and the 2015–2017 butterfish, *Illex* squid, and longfin squid fisheries.

The Council considered the recommendations of the SSC, the Monitoring Committee, and public comments at its June 11, 2014, meeting in Freehold, NJ, and made its specification recommendations. The Council submitted the recommendations, along with the required analyses, for agency review on July 28, 2014, with final submission on October 20, 2014. NMFS must review the Council's recommendations for compliance with the FMP and applicable law, and conduct notice-and-comment rulemaking to propose and implement the final specifications.

The regulations for the FMP require the specification of annual catch limits (ACL) and accountability measure (AM) provisions for mackerel and butterfish. Both squid species are exempt from the ACL/AM requirements because they have a life cycle of less than 1 year. In addition, the regulations require the specification of domestic annual harvest (DAH), domestic annual processing (DAP), total allowable level of foreign fishing (TALFF), joint venture processing (JVP), commercial and recreational annual catch targets (ACT), and a river herring and shad catch cap for mackerel, the butterfish mortality cap in the longfin squid fishery, and initial optimum yield (IOY) for both squid species.

In addition to the specifications, this action would also simplify the management measures for the direct butterfish fishery and changes the regulations in regard to possession limits.

Proposed 2015 Specifications for Atlantic Mackerel

TABLE 1—PROPOSED 2015 SPECIFICATIONS IN METRIC TONS (mt) FOR ATLANTIC MACKEREL

Overfishing limit (OFL)	Unknown
ABC	40,165
ACL	25,039
Commercial ACT	21,138
Recreational ACT/Recreational Harvest Limit (RHL)	1,397
1,397.	
DAH/DAP	20,872
JVP	0
TALFF	0

The most recent U.S. stock assessment for mackerel was conducted by the Transboundary Resources Assessment Committee (TRAC) in March 2010. The 2010 TRAC Status Report indicated reduced productivity in the stock and a lack of older fish in both the survey and catch data; however, the status of the mackerel stock is unknown because biomass reference points could not be determined. Due to uncertainty in the assessment, the TRAC Status Report recommended that total annual mackerel catches not exceed 80,000 mt (average total U.S. and Canadian landings from 2006–2008) until new information is available.

Since 2010, the SSC has recommended a stock-wide ABC of 80,000 mt based on the recommendation in the TRAC status report. NMFS previously implemented specifications that matched the recommendation in the TRAC Status Report for the 2013–2015 fishing years as part of the 2013 specifications for the FMP (January 16, 2013; 78 FR 3346). However, given uncertainty in 2010 mackerel assessment, low U.S. landings in recent years, and results from a 2014 Canadian assessment that suggest the stock is doing poorly, the SSC concluded that the foundation that it used for developing its previous ABC was inappropriate because 2006–2008 was a period of unusually high catches. In order to capture the highly periodic nature of mackerel catches, the SSC recommended a stock-wide ABC of 40,165 mt (median of 1978–2013 U.S. and Canadian catches) for the 2015 fishing year only. This period was chosen as a time when fisheries operations have been relatively

consistent and foreign fleets were not in operation.

According to the FMP, the mackerel ABC must be calculated using the formula U.S. ABC = Stock-wide ABC − C, where C is the estimated catch of mackerel in Canadian waters for the upcoming fishing year. Canadian catch was estimated at 15,126 mt (2014 Canadian mackerel quota of 10,000 mt, plus a discard rate of 1.26 percent, plus 5,000 mt estimated unreported catch). The Council deducted estimated Canadian catch from the stockwide ABC to a recommended U.S. ABC of 25,039 mt (40,165 mt minus 15,126 mt).

The Council recommended a recreational allocation of 1,552 mt (6.2 percent of the U.S. ABC). The proposed recreational ACT of 1,397 mt (90 percent of 1,552 mt) accounts for uncertainty in recreational catch and discard estimates. The Recreational ACT is equal to the Recreational Harvest Limit (RHL), which would be the effective cap on recreational catch.

For the commercial mackerel fishery, the Council recommended a commercial fishery allocation of 23,487 mt (93.8 percent of the U.S. ABC, the portion of the ACL that was not allocated to the recreational fishery). The recommended Commercial ACT of 21,138 mt (90 percent of 23,487 mt) compensates for management uncertainty in estimated Canadian landings, uncertainty in discard estimates, and possible misreporting of mackerel catch. The Commercial ACT would be further reduced by a discard rate of 1.26 percent to arrive at the proposed DAH of 20,872 mt. The DAH would be the effective cap on commercial catch.

Consistent with the Council's recommendation, NMFS proposes mackerel specifications that would set the U.S. ACL at 25,039 mt, the Commercial ACT at 21,138 mt, the DAH and DAP at 20,872 mt, and the Recreational ACT at 1,397 mt.

Additionally, as recommended by the Council, NMFS proposes to maintain JVP at zero (the most recent allocation was 5,000 mt of JVP in 2004). In the past, the Council recommended a JVP greater than zero because it believed U.S. processors lacked the ability to process the total amount of mackerel that U.S. harvesters could land. However, for the past 10 years, the Council has recommended zero JVP because U.S. shoreside processing capacity for mackerel has expanded. The Council concluded that processing capacity was no longer a limiting factor relative to domestic production of mackerel.

The Magnuson-Stevens Act provides that the specification of TALFF, if any, shall be the portion of the optimum yield (OY) of a fishery that will not be harvested by U.S. vessels. TALFF would allow foreign vessels to harvest U.S. fish and sell their product on the world market, in direct competition with U.S. industry efforts to expand exports. While a surplus existed between ABC and the mackerel fleet's harvesting capacity for many years, that surplus has disappeared due to downward adjustments of the specifications in recent years. Based on analysis of the global mackerel market and possible increases in U.S. production levels, the Council concluded that specifying a DAH/DAP that would result in zero TALFF would yield positive social and economic benefits to both U.S. harvesters and processors, and to the Nation. For these reasons, consistent with the Council's recommendation, NMFS proposes to specify DAH at a level that can be fully harvested by the domestic fleet, thereby precluding the specification of a TALFF, in order to support the U.S. mackerel industry. NMFS concurs that it is reasonable to assume that in 2015 the commercial fishery has the ability to harvest 20,872 mt of mackerel.

2015 Proposed River Herring and Shad Catch Cap in the Mackerel Fishery

In order to limit river herring and shad catch, Amendment 14 to the FMP (February 24, 2014; 79 FR 10029) allows the Council to set a river herring and shad cap through annual specifications. For 2015 the Council recommended that the cap be set at 89 mt initially, but if mackerel landings surpass 10,000 mt before closure, then the cap would increase to 155 mt. The 89-mt cap represents the median annual river herring and shad catch by all vessels landing over 20,000 lb (9.08 mt) of mackerel per trip from 2005–2012. These were years when the fishery caught about 13,000 mt of mackerel. The 155-mt cap is based on the median river herring and shad catch by all vessels landing over 20,000 lb (9.08 mt) of mackerel per trip from 2005–2012, adjusted to the 2015 proposed DAH (20,872 mt). The Council recommends the two-tier system in order to encourage the fishery to avoid river herring and shad regardless of the rate of mackerel catches. If mackerel catch is low, the 89-mt cap would encourage fishermen to avoid catching river herring and shad. If mackerel catch increases, the 155-mt cap should still allow mackerel fishing to occur as long as river herring and shad catch rates remain below the recent median. Once the mackerel fishery catches 95 percent of the river herring and shad cap, we will close the directed mackerel fishery and implement a 20,000-lb (9.08-mt) incidental catch trip limit for the remainder of the year.

2015–2017 Proposed Illex Specifications

TABLE 2—PROPOSED 2015–2017 SPECIFICATIONS IN METRIC TON (mt) FOR ILLEX SQUID

OFL	Unknown
ABC	24,000
Initial Optimum Yield (IOY)	22,915
DAH/DAP	22,915

The *Illex* stock was most recently assessed at the 42nd Northeast Regional Stock Assessment Workshop in late 2005. The assessment did not generate reliable estimates of stock biomass or fishing mortality. In the absence of an updated stock assessment, the SSC recommended the status quo ABC of 24,000 mt. Landings of 24,000–26,000 mt do not appear to have caused harm to the *Illex* stock, based on trawl survey indices and landings in years following when landings were in the range of 24,000–26,000 mt.

The Council recommended that the ABC be reduced by the status quo discard rate of 4.52 percent, which results in an IOY, DAH, and DAP for recommendation of 22,915 mt for the 2015–2017 fishing years. These levels are the same as was specified for the *Illex* fishery in 2012–2014. The Council will review this decision during its annual specifications process and may make a change for 2016 or 2017 if new information is available.

Consistent with the Council's recommendation, NMFS proposes to specify the *Illex* ABC as 24,000 mt, and to specify IOY, DAH, and DAP as 22,915 mt for the 2015–2017 fishing years.

2015–2017 Proposed Longfin Squid Specifications

TABLE 3—PROPOSED 2015–2017 SPECIFICATIONS IN METRIC TONS (mt) FOR LONGFIN SQUID

OFL	Unknown
ABC	23,400
IOY	22,445
DAH/DAP	22,445

The 51st Northeast Regional Stock Assessment Workshop, published in January 2011, found that the longfin squid stock is not overfished, but that the overfishing status is unknown. The SSC used the stock assessment information to recommend an ABC of 23,400 mt for the 2012–2014 fishing

years, subject to annual review. This recommendation corresponds to catch in the year with the highest observed exploitation fraction (catch divided by estimated biomass) during a period of light exploitation (1976–2009). The SSC interpreted this level of exploitation to be sustainable over the long term. In absence of newer information, the SSC recommended renewing current levels for another three years, subject to annual review, resulting in an ABC of 23,400 mt for the 2015–2017 fishing years.

The Council recommended that the ABC be reduced by the status quo discard rate of 4.08 percent, which results in an IOY, DAH, and DAP for recommendation of 22,445 mt for the 2015–2017 fishing years.

Consistent with the Council's recommendation, NMFS proposes an ABC of 23,400 mt, and an IOY, DAH, and DAP of 22,445 mt for the 2015–2017 fishing years.

Distribution of the Longfin DAH

The Council did not recommend any changes to the trimester allocation of the 2015–2017 longfin DAH. Therefore allocations would remain at 2012–2014 levels according to percentages specified in the FMP, as follows:

TABLE 4—PROPOSED 2015–2017 TRIMESTER ALLOCATION OF LONGFIN QUOTA

Trimester	Percent	Metric tons
I (Jan–Apr)	43	9,651
II (May–Aug)	17	3,816
III (Sep–Dec)	40	8,978
Total	100	22,445

2015–2017 Proposed Butterfish Specifications

TABLE 5—PROPOSED 2015–2017 SPECIFICATIONS IN METRIC TONS (mt) FOR BUTTERFISH

	2015	2016	2017
OFL	41,092	N/A	N/A
ABC	33,278	31,412	30,922
Commercial ACT (ABC minus 10-percent buffer)	29,950	28,271	27,830
DAH (ACT minus butterfish cap and discards)	22,530	21,043	20,652
Directed Fishery closure limit (DAH minus 1,411 mt buffer)	21,119	19,631	20,652
Butterfish Cap (in the longfin squid fishery)	3,884	3,884	3,884

The status of the butterfish stock was updated in the 58th Northeast Regional Stock Assessment Workshop (March 2014), which concluded that the stock was above target stock size and experiencing low fishing mortality. The stock is now considered fully rebuilt. The SSC derived an OFL of 41,092 mt by applying estimated natural and fishing mortality to the size of the existing stock. The SSC recommended a 2015 ABC of 33,278 mt (increased dramatically from 9,100 mt in 2014) to account for the increased stock size and estimated expected fishing mortality in 2014. The SSC recommended an ABC of 31,412 mt in 2016, and 30,922 mt in 2017 to account for fishing mortality in 2015 and 2016, respectively, with a 60-percent probability of not overfishing as required by the Council risk policy.

The Council recommended setting the butterfish ACL equal to the ABC, and establishing a 10-percent buffer between ACL and ACT for management uncertainty, which would result in an ACT of 29,950 mt in 2015, 28,271 mt in 2016, and 27,830 mt in 2017. To prevent butterfish catch from exceeding the ACT, the Council subtracts butterfish catch in the longfin squid fishery, catch in other fisheries, and discards in the directed fishery. The Council recommended leaving the butterfish cap at the 2014 level of 3,884 mt for each year. This cap is not constraining on the longfin fishery and reserves most of the available butterfish quota for the directed butterfish fishery. The maximum amount of butterfish discards in non-longfin fisheries from 2011–2013 was 637 mt. Therefore, 4,521 mt (3,884-mt butterfish cap plus 637 mt of discards) are subtracted from the ACT. Because there are no recent observed trips with substantial butterfish landings, the Council looked to observed trips that landed over 25,000 lb (9.33 mt) butterfish between 1989 and 2000, which had a butterfish discard rate of 11.4 percent. The Council identified this discard rate as the best approximation for the fishery under current conditions. Therefore, the Council recommended setting the DAH at 22,530 mt in 2015, 21,042 mt in 2016, and 20,652 in 2017. Butterfish TALFF is only specified to address bycatch by foreign fleets targeting mackerel TALFF. Because there is no mackerel TALFF, butterfish TALFF would also be set at zero.

NMFS proposes specifications, consistent with the Council's recommendation, as outlined in Table 5. NMFS also proposes that the 2015 butterfish mortality cap be allocated by Trimester as follows:

TABLE 6—PROPOSED TRIMESTER ALLOCATION OF BUTTERFISH MORTALITY CAP ON THE LONGFIN SQUID FISHERY FOR 2015

Trimester	Percent	Metric tons
I (Jan–Apr)	43	1,670
II (May–Aug)	17	660

TABLE 6—PROPOSED TRIMESTER ALLOCATION OF BUTTERFISH MORTALITY CAP ON THE LONGFIN SQUID FISHERY FOR 2015—Continued

Trimester	Percent	Metric tons
III (Sep–Dec)	40	1,554
Total	100	3,844

Butterfish Directed Fishery Closure Mechanism

Due to the dramatic increase in butterfish availability and proposed DAH, the Council recommended simplifying the three-phase butterfish management season enacted in 2013 (January 16, 2013; 78 FR 3346). Instead of the phased system which implements different trip limits depending on catch levels, the Council recommended that vessels issued a longfin squid/butterfish moratorium permit (as specified at § 648.4(a)(5)(i)) be allowed to land unlimited amounts of butterfish if using mesh greater than or equal to 3 inches (76 mm) until projected landings reach within 1,411 mt of a given year's DAH. Once landings are within 1,411 mt of the DAH, NMFS would implement a 5,000-lb (2.27-mt) trip limit. Vessels issued a longfin squid/butterfish moratorium permit fishing with mesh less than 3 inches (76 mm) are currently prohibited from landing more than 2,500 lb (1.13 mt) of butterfish per trip, and no changes are proposed for those

vessels. The Council identified 1,411 mt as the amount that would allow some landings under a 5,000-lb (2.27-mt) trip limit without reaching the DAH. In the unlikely event that projected landings reach the annual DAH, then Council recommended that the trip limit be reduced to 600 lb (0.27 mt) to prevent an overage of the ACT.

Consistent with Council recommendations, NMFS proposes to implement the simplified closure mechanism, and the proposed specifications detailed in Table 5.

Corrections

This proposed rule also contains a minor adjustment to an existing regulation. The vessel monitoring system (VMS) power-down exemption for vessels that will be at the dock for more than 30 consecutive days, at § 648.10(c)(2)(i)(B), currently lists specific eligible permits. The proposed regulatory text is simplified to clarify that the exemption is available to all permits that are required to have VMS.

Classification

Pursuant to section 304(b)(1)(A) of the Magnuson-Stevens Act, the NMFS Assistant Administrator has determined that this proposed rule is consistent with the Atlantic Mackerel, Squid, and Butterfish FMP, other provisions of the Magnuson-Stevens Act, and other applicable law, subject to further consideration after public comment.

This proposed rule has been determined to be not significant for purposes of Executive Order 12866.

The Council prepared an IRFA, as required by section 603 of the Regulatory Flexibility Act (RFA). The IRFA describes the economic impact this proposed rule, if adopted, would have on small entities. A summary of the analysis follows. A copy of this analysis is available from the Council or NMFS (see **ADDRESSES**) or via the Internet at *http://www.nero.noaa.gov.*

Statement of Objective and Need

This action proposes 2015 specifications for mackerel, and 2015–2017 specifications for butterfish, *Illex* squid, and longfin squid. It also proposes to modify the river herring catch cap in the mackerel fishery and to simplify the closure mechanism in the butterfish fishery. A complete description of the reasons why this action is being considered, and the objectives of and legal basis for this action, are contained in the preamble to this proposed rule and are not repeated here.

Description and Estimate of Number of Small Entities to Which the Rule Will Apply

Based on permit data for 2013, the numbers of potential fishing vessels in the 2015 fisheries are as follows: 384 separate vessels hold Atlantic mackerel, longfin squid, *Illex* squid, and butterfish limited access permits, 287 entities own those vessels, and, based on current Small Business Administration (SBA) definitions, 274 are small entities. Of the 274 small entities, 29 had no revenue in 2013 and those entities with no revenue are listed as small entities for the purposes of this analysis. All of the entities that had revenue fell into the finfish or shellfish categories, and the SBA definitions for those categories for 2014 are $20.5 million for finfish fishing and $5.5 million for shellfish fishing. Many vessels participate in more than one of these fisheries; therefore, permit numbers are not additive. The only proposed alternatives that involve increased restrictions apply to mackerel limited access permits, so those numbers are listed separately (they are a subset of the above entities). This analysis found that 150 separate vessels hold Atlantic mackerel, longfin squid, *Illex* squid, and butterfish limited access permits, 114 entities own those vessels, and, based on current SBA definitions, 107 are small entities.

Description of Projected Reporting, Recordkeeping, and Other Compliance Requirements

There are no new reporting or record keeping requirements contained in any of the alternatives considered for this action. In addition, there are no Federal rules that duplicate, overlap, or conflict with this proposed rule.

Minimizing Significant Economic Impacts on Small Entities

The mackerel commercial DAH proposed in this action (20,872 mt) represents a reduction from status quo (2014 DAH = 33,821 mt). Despite the reduction, the proposed DAH is above recent U.S. landings; mackerel landings for 2010–2013 averaged 5,873 mt. Thus, the reduction does not pose a constraint to vessels relative to the landings in recent years. Even though the proposed 2015 quota is lower than 2014, it would still allow more than a tripling of catch compared to any year 2011–2013. This action proposes a Recreational ACT/RHL of 1,552 mt. Because recreational harvest from 2010–2013 averaged 850 mt, it does not appear that the allocation for the recreational fishery will constrain recreational harvest. Overall, the proposed action is not expected to result in any reductions in revenues for vessels that participate in either the commercial or recreational mackerel fisheries.

The proposed river herring and shad catch cap in the mackerel fishery has the potential to limit the fishery from achieving its full mackerel quota if the river herring and shad encounter rates are high, but it's very unlikely that the fishery would close before exceeding the levels of landings experienced since 2010, when landings have been less than 11,000 mt. Based on the operation of the cap in 2014 (the first year of the cap), as long as the fishery can maintain relatively low river herring and shad catch rates, this alternative is unlikely to constrain the mackerel fishery. Examination of river herring and shad catch rates in 2011–2013 suggest that the only year that the proposed cap would have been binding would have been 2012. In 2012, relevant trips landed 5,074 mt of mackerel, but the fishery would have closed at approximately 4,439 mt if the proposed cap been in place. Given the river herring and shad encounter rate in 2012, about 608 mt of mackerel landings would have been forgone. Using the 2013 price of mackerel, 608 mt mackerel would have amount to $265,105 of potentially forgone ex-vessel revenues. However, based on the operation of the cap in 2014, actual river herring and shad catch rates may be lower under the cap and therefore the cap may not be binding. Therefore, we conclude that there is no impact to the relevant entities.

The *Illex* IOY (22,915 mt) proposed in this action renews the status quo for three more years. Though annual *Illex* landings have approached this amount in some recent years (15,825 mt for 2010, 18,797 mt for 2011, 11,709 mt for 2012, and 3,835 mt for 2013), the landings were lower than the level being proposed. Thus, implementation of this proposed action should not result in a reduction in revenue or a constraint on expansion of the fishery in 2015–17.

The proposed longfin squid IOY (22,445 mt) renews the status quo levels for three more years. Because longfin squid landings from 2010–2013 averaged 10,093 mt, the proposed IOY provides an opportunity to increase landings, though if recent trends of low landings continue, there may be no increase in landings despite the increase in the allocation. No reductions in revenues for the longfin squid fishery are expected as a result of this proposed action.

The butterfish DAHs proposed in this action (21,119 mt in 2015, 19,631 mt in 2016 and 19,241 mt in 2017) represents

a 660-percent increase over the 2014 DAH (3,200 mt). Due to market conditions, there has not been a directed butterfish fishery in recent years; therefore, recent landings have been low. The proposed increase in the DAH has the potential to increase revenue for permitted vessels, having a positive economic impact.

This action also proposes simplifying the closure mechanism for the butterfish fishery. This would allow permitted vessels to take butterfish when they are available or when dealers may process them, and should have a positive economic impact on the fishery.

The proposed 2015–17 butterfish discard cap of 3,884 mt would renew the status quo for three more years. The longfin squid fishery will close during Trimester I, II, or III if the butterfish discards reach the trimester allocation. If the longfin squid fishery is closed in response to butterfish catch before the entire longfin squid quota is harvested, then a loss in revenue is possible. The potential for longfin squid revenue loss is dependent upon the size of the butterfish discard cap. This cap level was in effect for the 2013 and 2014 fishing years, and did not restrict the fishery in either year. For that reason, additional revenue losses are not expected as a result of this proposed action.

Alternatives to the Proposed Rule

The Council analysis evaluated two alternatives to the proposed specifications for mackerel. The proposed action would set the U.S. ABC at 40,165 mt, the Commercial ACT at 21,138 mt, the DAH and DAP at 20,872 mt, and the Recreational ACT at 1,397 mt. The first alternative (status quo—least restrictive) would have resulted in a U.S. ABC of 43,781 mt, a Commercial ACT of 34,907 mt, a DAH/DAP of 33,821 mt, and a Recreational ACT of 2,443 mt. The status quo alternative was based previous SSC recommendations, and was not selected because due to increasing concern that low catches may indicate a decline in the status of the mackerel stock. The other alternative (most restrictive) was based on average catch from 1992 to 2001, the most recent period of time when mackerel catches were stable. This alternative would set the U.S. ABC and ACL at 18,274 mt, the Commercial ACT at 15,427 mt, the DAH and DAP at 15,233 mt, and the Recreational ACT at 1,020 mt. This alternative was not selected because it was inconsistent with the ABC recommended by the SSC.

The Council considered two alternatives to the proposed 89-mt river herring and shad catch cap in the mackerel fishery. The proposed alternative was the most restrictive option. The status quo alternative (least restrictive) would maintain the cap at 236 mt. The other alternative would set the cap at the median observed river herring and shad catch from each year 2005–2012 as applied to the 2015 proposed mackerel quota (155 mt). These alternatives were not selected because the Council believed they would be less protective of river herring and shad than the proposed alternative.

The Council considered two alternatives to the preferred action for *Illex.* The proposed action would set the ABC at 24,000 mt, and the IOY, DAH, and DAP at 22,915 mt. The first alternative (least restrictive) would have set ABC at 30,000 mt, and IOY, DAH, and DAP at 28,644 mt. This alternative was not selected because the higher specifications were inconsistent with the results of the most recent stock assessment. The second alternative (most restrictive) would have set ABC at 18,000 mt, and IOY, DAH, and DAP at 17,186 mt. The Council considered this alternative unnecessarily restrictive.

The Council considered two alternatives to the preferred action for longfin squid. The preferred alternative would set the ABC at 23,400 mt, and the IOY, DAH, and DAP at 22,445 mt. The first alternative (least restrictive) would have set the ABC at 29,250 mt, and the IOY, DAH, and DAP at 28,057 mt. The second alternative (most restrictive) would have set the ABC at 17,550 mt, and the IOY, DAH and DAP at 16,834 mt. These alternatives were not selected because they were all inconsistent with the ABC recommended by the SSC.

There were two alternatives to the preferred action for butterfish that were not selected by the Council. The preferred alternative (least restrictive) would set the ABC/ACL at 33,278 mt in 2015, the ACT at 29,950 mt, the DAH at 22,530 mt, with slight decreases for the 2015 and 2015 fishing years, and the butterfish cap at 3,884 mt from 2015 to 2017. The first alternative (status quo—most restrictive) did not take into account the revised stock assessment, and would have set the ABC/ACL at 9,100 mt, the ACT at 8,190 mt, the DAH at 3,200 mt, and the butterfish cap at 3,884 mt. The second alternative would have increased butterfish quotas from status quo levels to SSC recommended levels slowly over three years with an ABC/ACL of 16,332 mt and a DAH of 9,017 mt in 2015, a ABC/ACL of 23,627 mt and DAH of 14,835 mt in 2016, and an ABC/ACL of 30,922 and DAH of 20,652 mt in 2017. These two alternatives were not selected because they were both inconsistent with the ABC recommended by the SSC. Both the preferred alternative and the second alternative would also simplify the closure mechanism for butterfish, compared to the no action/status quo alternative, which features a phased closure mechanism. The simplified closure mechanism is less restrictive than the phased closure mechanism, and was selected over because the increased quota does not require the intensive management necessary for the phased closure mechanism.

List of Subjects in 50 CFR Part 648

Fisheries, Fishing, Recordkeeping and reporting requirements.

Dated: November 7, 2014.

Samuel D. Rauch III,

Deputy Assistant Administrator for Regulatory Programs, National Marine Fisheries Service.

For the reasons set out in the preamble, 50 CFR part 648 is proposed to be amended as follows:

PART 648—FISHERIES OF THE NORTHEASTERN UNITED STATES

■ 1. The authority citation for part 648 continues to read as follows:

Authority: 16 U.S.C. 1801 *et seq.*

■ 2. In § 648.10, paragraph (c)(2)(i)(B) is revised to read as follows:

§ 648.10 VMS and DAS requirements for vessel owners/operators.

* * * * *

(c) * * *

(2) * * *

(i) * * *

(B) The vessel owner signs out of the VMS program for a minimum period of 30 consecutive days by obtaining a valid letter of exemption pursuant to paragraph (c)(2)(ii) of this section, the vessel does not engage in any fisheries or move from the dock/mooring until the VMS unit is turned back on, and the vessel complies with all conditions and requirements of said letter;

* * * * *

■ 3. In § 648.24, paragraph (c)(1) introductory text is revised to read as follows:

§ 648.24 Fishery closures and accountability measures.

* * * * *

(c) *Butterfish AMs*—(1) *Directed butterfish fishery closure.* When butterfish catch reaches the butterfish closure threshold as determined in the annual specifications, NMFS shall implement a 5,000-lb (2.27-mt) possession limit for vessels issued a longfin squid/butterfish moratorium permit and that are fishing with a

minimum mesh size of 3 inches (76 mm). When the butterfish catch is projected to reach the butterfish DAH as determined in the annual specifications, NMFS shall implement a 600-lb (0.27-mt) possession limit for all vessels issued a longfin squid/butterfish moratorium or incidental catch permit.

* * * * *

■ 3. In § 648.26, paragraph (d) is revised to read as follows:

§ 648.26 Mackerel, squid, and butterfish possession restrictions.

* * * * *

(d) *Butterfish.* (1) A vessel issued a longfin squid/butterfish moratorium permit (as specified at § 648.4(a)(5)(i)) fishing with a minimum mesh size of 3 inches (76 mm) is authorized to fish for, possess, or land butterfish with no possession restriction in the EEZ per trip, and may only land butterfish once on any calendar day, which is defined as the 24-hr period beginning at 0001 hours and ending at 2400 hours, provided that directed butterfish fishery has not been closed, and the reduced possession limit enacted pursuant to § 648.24(c)(1). When butterfish harvest is projected to reach the threshold for the butterfish fishery (as described in § 648.24(c)(1)), these vessels may not fish for, possess, or land more than 5,000 lb (2.27 mt) of butterfish per trip at any time, and may only land butterfish once on any calendar day. When butterfish harvest is projected to reach the DAH limit (as described in § 648.24(c)(1)), these vessels may not fish for, possess, or land more than 600 lb (0.27 mt) of butterfish per trip at any time, and may only land butterfish once on any calendar day.

(2) A vessel issued longfin squid/butterfish moratorium permit fishing with mesh less than 3 inches (76 mm) may not fish for, possess, or land more than 2,500 lb (1.13 mt) of butterfish per trip at any time, and may only land butterfish once on any calendar day, provided that butterfish harvest has not reached the DAH limit and the reduced possession limit has not been implemented, as described in § 648.24(c)(1). When butterfish harvest is projected to reach the DAH limit (as described in § 648.24(c)(1)), these vessels may not fish for, possess, or land more than 600 lb (0.27 mt) of butterfish per trip at any time, and may only land butterfish once on any calendar day.

(3) A vessels issued a longfin squid/butterfish incidental catch permit, regardless of mesh size used, may not fish for, possess, or land more than 600 lb (0.27 mt) of butterfish per trip at any time, and may only land butterfish once on any calendar day, which is defined as the 24-hr period beginning at 0001 hours and ending at 2400 hours.

[FR Doc. 2014–26980 Filed 11–13–14; 8:45 am]

BILLING CODE 3510–22–P

Notices

Federal Register
Vol. 79, No. 220
Friday, November 14, 2014

This section of the FEDERAL REGISTER contains documents other than rules or proposed rules that are applicable to the public. Notices of hearings and investigations, committee meetings, agency decisions and rulings, delegations of authority, filing of petitions and applications and agency statements of organization and functions are examples of documents appearing in this section.

ADMINISTRATIVE CONFERENCE OF THE UNITED STATES

Notice of Public Meeting of the Assembly of the Administrative Conference of the United States

AGENCY: Administrative Conference of the United States.

ACTION: Notice.

SUMMARY: Pursuant to the Federal Advisory Committee Act (5 U.S.C. App.), the Assembly of the Administrative Conference of the United States will hold a meeting to consider three proposed recommendations and to conduct other business. This meeting will be open to the public.

DATES: The meeting will take place on Thursday, December 4, 2014, 2:00 p.m. to 5:00 p.m., and on Friday, December 5, 2014, 9:00 a.m. to 12:15 p.m. The meeting may adjourn early if all business is finished.

ADDRESSES: The meeting will be held at the Commodity Futures Trading Commission, Three Lafayette Centre, 1155 21st Street NW., Washington, DC 20581 (Main Conference Room).

FOR FURTHER INFORMATION CONTACT: Shawne McGibbon, General Counsel (Designated Federal Officer), Administrative Conference of the United States, Suite 706 South, 1120 20th Street NW., Washington, DC 20036; Telephone 202–480–2088; email *smcgibbon@acus.gov.*

SUPPLEMENTARY INFORMATION: The Administrative Conference of the United States makes recommendations to federal agencies, the President, Congress, and the Judicial Conference of the United States regarding the improvement of administrative procedures (5 U.S.C. 594). The membership of the Conference, when meeting in plenary session, constitutes the Assembly of the Conference (5 U.S.C. 595).

Agenda: The Assembly will discuss and consider three proposed recommendations as described below:

Retrospective Review of Agency Rules. This recommendation examines agencies' procedures for reanalyzing and amending existing regulations and offers recommendations designed to promote a culture of retrospective review at agencies. Among other things, it urges agencies to plan for retrospective review when drafting new regulations; highlights considerations germane to selecting regulations for reevaluation; identifies factors relevant to ensuring robust review; and encourages agencies to coordinate with the Office of Management and Budget, sister agencies, and outside entities (including stakeholders and foreign regulators) when designing and conducting retrospective reviews.

Petitions for Rulemaking. This recommendation identifies agency procedures and best practices for accepting, processing, and responding to petitions for rulemaking. It seeks to ensure that the public's right to petition is a meaningful one, while still respecting the need for agencies to retain decisional autonomy. Building upon ACUS's previous work on the subject, it provides additional guidance that may make the petitioning process more useful for agencies, petitioners, and the public.

Best Practices for Using Video Teleconferencing for Hearings. This recommendation offers practical guidance regarding how best to conduct video hearings, and addresses the following subjects: Equipment and environment, training, financial considerations, procedural practices, fairness and satisfaction, and collaboration among agencies. It also provides for the development of a video hearings handbook by ACUS's Office of the Chairman.

Additional information about the proposed recommendations and the order of the agenda, as well as other materials related to the meeting, can be found at the 61st Plenary Session page on the Conference's Web site: (*http://www.acus.gov/meetings-and-events/plenary-meeting/61st-plenary-session*).

Public Participation: The Conference welcomes the attendance of the public at the meeting, subject to space limitations, and will make every effort to accommodate persons with disabilities or special needs. Members of the public who wish to attend in person are asked to RSVP online at the 61st Plenary Session Web page listed above, no later than two days before the meeting, in order to facilitate entry. Members of the public who attend the meeting may be permitted to speak only with the consent of the Chairman and the unanimous approval of the members of the Assembly. If you need special accommodations due to disability, please inform the Designated Federal Officer noted above at least 7 days in advance of the meeting. The public may also view the meeting through a live Webcast, which will be available at: *http://new.livestream.com/ACUS/61stPlenarySession.* In addition, the public may follow the meeting on our Twitter feed *@acusgov* or hashtag *#61stPlenary.*

Written Comments: Persons who wish to comment on any of the proposed recommendations may do so by submitting a written statement either online by clicking ''Submit a Comment'' on the 61st Plenary Session Web page listed above or by mail addressed to: December 2014 Plenary Session Comments, Administrative Conference of the United States, Suite 706 South, 1120 20th Street NW., Washington, DC 20036. Written submissions must be received no later than Wednesday, November 26, to assure consideration by the Assembly.

Dated: November 10, 2014.

Shawne McGibbon,

General Counsel.

[FR Doc. 2014–26982 Filed 11–13–14; 8:45 am]

BILLING CODE 6110–01–P

DEPARTMENT OF AGRICULTURE

Forest Service

Information Collection; Qualified Products Lists for Fire Chemicals for Wild Land Fire Management

AGENCY: Forest Service, USDA.

ACTION: Notice; request for comment.

SUMMARY: In accordance with the Paperwork Reduction Act of 1995, the Forest Service is seeking comments from all interested individuals and organizations on the extension with no revision of a currently approved information collection, Qualified

Products Lists for Fire Chemicals for Wildland Fire Management.

DATES: Comments must be received in writing on or before January 13, 2015 to be assured of consideration. Comments received after that date will be considered to the extent practicable.

ADDRESSES: Comments concerning this notice should be addressed to Dave Haston, Branch Chief, Equipment and Chemicals, USDA Forest Service, National Interagency Fire Center, 3833 S. Development Avenue, Boise, ID 83705.

Comments also may be submitted via facsimile to 208–387–5642 or by email to: *dhaston@fs.fed.us.*

The public may inspect comments received at the National Interagency Fire Center (NIFC), Jack Wilson Building, in Boise, Idaho, Monday through Friday 10:00 a.m. to 3:00 p.m. Visitors are encouraged to call ahead to 208–387–5348 to facilitate entry to the building.

FOR FURTHER INFORMATION CONTACT: Shirley Zylstra, Missoula Technology and Development Center (MTDC), 406–329–4859, Cecilia Johnson, (MTDC), 406–329–4819, or Dave Haston, NIFC, 208–387–5642. Individuals who use telecommunication devices for the deaf (TDD) may call the Federal Information Relay Service (FIRS) at 1–800–877–8339 twenty-four hours a day, every day of the year, including holidays.

SUPPLEMENTARY INFORMATION:

Title: Qualified Products Lists for Fire Chemicals for Wild Land Fire Management.

OMB Number: 0596–0182.

Expiration Date of Approval: January 31, 2015.

Type of Request: Extension with no revision.

Abstract: The Forest Service and cooperating wildland firefighting agencies need adequate types and quantities of qualified fire chemical products available to accomplish fire management activities as safely and effectively as possible. To accomplish this objective, the Agency evaluates and pre-approves commercial wildland firefighting chemicals. The Agency may be required to submit the formulations to the US Fish and Wildlife Service and NOAA Fisheries during the evaluation process. All products must meet the requirements of specifications identified and maintained by the Wildland Fire Chemical Systems (WFCS) staff at the Forest Service Missoula Technology and Development Center (MTDC). After a product evaluation has been completed successfully, the product is added to the Qualified Products List (QPL) for the appropriate product type. All Forest Service procurements of wildland fire chemicals are made from these lists.

To initiate an evaluation, product manufacturers (or authorized suppliers) enter into an agreement with the Forest Service and pay all costs associated with the submission and evaluation of the product. Once the agreement is in place and funds are deposited to cover the associated costs, the manufacturer submits the following information to WFCS:

1. List of the specific ingredients and quantity used to prepare the product,
2. Identification of the source of supply for each ingredient,
3. Copies of the Material Safety Data Sheet (MSDS) for the product and for each ingredient used to prepare the product, and
4. Specific mixing requirements and performance information.

Review of the submitted information assures that the product does not contain ingredients meeting the criteria for Chemicals of Concern, that is by appearing on one or more of the following lists:

- Agency list of unacceptable ingredients.
- National Toxicology Program (NTP) ''Annual Report on Carcinogens''.
- International Agency for Research on Cancer (IARC) Monographs for Potential Carcinogens.
- Comprehensive Environmental Response, Compensation, and Liability Act (CERCLA) ''List of Extremely Hazardous Substances and Their Threshold Planning Quantities''.
- Resources Conservation and Recovery Act (RCRA), ''Acutely Hazardous and Toxic Wastes''.
- Emergency Planning and Community Right to Know (EPCRA), ''Toxic Release Inventory''.

A risk assessment, performed at the manufacturer expense, is required. The risk assessment, performed by a third party selected by the Agency, assesses the products and levels of ingredients found in typical applications relative to human and environmental impact. Each product submitted is tested to determine the mammalian and aquatic toxicity of the product and must meet specific levels of performance to minimize potential risk during firefighting operations. Additional tests are performed to determine the effectiveness of the product to reduce spread rate and intensity of the fire by application directly on or near the fire.

A number of product characteristics are measured over the operational performance range of the product to ensure that the product meets the needs of the firefighters in the field.

The collection of this information for each product submission is necessary due to the length of time needed to test the product (18 to 24 months) and need to ensure that products are safe and effective prior to purchase and use. This information collection and the product evaluation must be conducted on an on-going basis to ensure the Agency can solicit and award contracts in a timely manner to provide firefighters with safe and effective wildland fire chemical products.

Estimate of Annual Burden: 4.5 hours.

Type of Respondents: Businesses (manufacturers and suppliers) of fire chemicals for wildland fire management.

Estimated Annual Number of Respondents: 3.

Estimated Annual Number of Responses per Respondent: 3.

Estimated Total Annual Burden on Respondents: 40.5 hours.

Comment is Invited:

Comment is invited on: (1) Whether this collection of information is necessary for the stated purposes and the proper performance of the functions of the Agency, including whether the information will have practical or scientific utility; (2) the accuracy of the Agency's estimate of the burden of the collection of information, including the validity of the methodology and assumptions used; (3) ways to enhance the quality, utility, and clarity of the information to be collected; and (4) ways to minimize the burden of the collection of information on respondents, including the use of automated, electronic, mechanical, or other technological collection techniques or other forms of information technology.

All comments received in response to this notice, including names and addresses when provided, will be a matter of public record. Comments will be summarized and included in the submission request toward Office of Management and Budget approval.

Dated: November 6, 2014.

Debra S. Pressman,

Acting Deputy Chief, State and Private Forestry.

[FR Doc. 2014–26943 Filed 11–13–14; 8:45 am]

BILLING CODE 3411–15–P

DEPARTMENT OF AGRICULTURE

National Agricultural Statistics Service

Notice of the Advisory Committee on Agriculture Statistics Meeting

AGENCY: National Agricultural Statistics Service, USDA.

ACTION: Notice of public meeting.

SUMMARY: In accordance with the Federal Advisory Committee Act, the National Agricultural Statistics Service (NASS) announces a meeting of the Advisory Committee on Agriculture Statistics.

DATES: The Committee meeting will be held from 8:30 a.m. to 5:30 p.m. on Tuesday, December 2, 2014, and from 8:00 a.m. to 12:30 p.m. on Wednesday, December 3, 2014. There will be an opportunity for public questions and comments at 9:45 a.m. on December 3, 2014. All times mentioned herein refer to Central Standard Time.

ADDRESSES: The Committee meeting on December 2, 2014 will take place at the NASS National Operations Center, 9700 Page Avenue, Suite 400, St. Louis, Missouri 63132. The Committee will meet on December 3, 2014, at the Drury Inn & Suites Brentwood, 8700 Eager Road, Brentwood, Missouri 63144. Written comments may be filed before or up to two weeks after the meeting with the contact person identified herein at: U.S. Department of Agriculture, National Agricultural Statistics Service, 1400 Independence Avenue SW., Room 5029, South Building, Washington, DC 20250–2000.

FOR FURTHER INFORMATION CONTACT: Hubert Hamer, Executive Director, Advisory Committee on Agriculture Statistics, telephone: 202–720–3896, eFax: 855–593–5473, or email: *HQSDOD@nass.usda.gov.* General information about the committee can also be found at *www.nass.usda.gov/about_nass.*

SUPPLEMENTARY INFORMATION: The Advisory Committee on Agriculture Statistics, which consists of 20 members appointed from 7 categories covering a broad range of agricultural disciplines and interests, has scheduled a meeting on December 2–3, 2014. During this time the Advisory Committee will discuss topics including the status of NASS programs, Census of Agriculture Updates, Census of Agriculture Program Plans, and Respondent Relation Issues.

The Committee meeting is open to the public. The public is asked to pre-register for the meeting at least 10 business days prior to the meeting. Your pre-registration must state the names of each person in your group, organization, or interest represented; the number of people planning to give oral comments, if any; and whether anyone in your group requires special accommodations. Submit registrations to Executive Secretary, Advisory Committee on Agriculture Statistics, via eFax: 855–593–5473, or email: *HQSDOD@nass.usda.gov.* Members of the public who request to give oral comments to the Committee must arrive at the meeting site by 8:45 a.m. on Wednesday, December 3, 2014. Written comments by attendees or other interested stakeholders will be welcomed for the public record before and up to two weeks following the meeting. The public may file written comments by mail to the Executive Director, Advisory Committee on Agriculture Statistics, U.S. Department of Agriculture, National Agricultural Statistics Service, 1400 Independence Avenue SW., Room 5431 South Building, Washington, DC 20250–2000. Written comments can also be sent via eFax: 855–593–5473, or email: *HQSDOD@nass.usda.gov.* All statements will become a part of the official records of the USDA Advisory Committee on Agriculture Statistics and will be kept on file for public review in the office of the Executive Director, Advisory Committee on Agriculture Statistics, U.S. Department of Agriculture, Washington, DC 20250.

Signed at Washington, DC, November 3, 2014.

Joseph T. Reilly,

Administrator, National Agricultural Statistics Service.

[FR Doc. 2014–27043 Filed 11–13–14; 8:45 am]

BILLING CODE 3410–20–P

COMMISSION ON CIVIL RIGHTS

Agenda and Notice of Public Meeting of the California Advisory Committee

Notice is hereby given, pursuant to the provisions of the rules and regulations of the U.S. Commission on Civil Rights (Commission) and the Federal Advisory Committee Act (FACA) that a meeting of the California Advisory Committee (Committee) to the Commission will convene by conference call at 11:00 a.m. Pacific Time on Thursday, December 11, 2014. The purpose of the meeting is for the Committee to discuss its project on policing.

This meeting is available to the public through the following toll-free call-in number: 877–446–3914, conference ID: 4199050. Any interested member of the public may call this number and listen to the meeting. Callers can expect to incur charges for calls they initiate over wireless lines, and the Commission will not refund any incurred charges. Callers will incur no charge for calls they initiate over land-line connections to the toll-free telephone number. Persons with hearing impairments may also follow the proceedings by first calling the Federal Relay Service at 1–800–977–8339 and providing the Service with the conference call number and conference ID number.

Members of the public are entitled to submit written comments. The comments must be received in the regional office by January 12, 2015. The address is U.S. Commission on Civil Rights, Western Regional Office, 300 North Los Angeles St., Suite 2010, Los Angeles, CA 90012. Comments may be emailed to Angelica Trevino at *atrevino@usccr.gov.*

Records generated from this meeting may be inspected and reproduced at the Western Regional Office, as they become available, both before and after the meeting. Persons interested in the work of this advisory committee are advised to go to the Commission's Web site, *www.usccr.gov,* or to contact the Western Regional Office at the above email or street address.

The meeting will be conducted pursuant to the provisions of the rules and regulations of the Commission and FACA.

Dated: November 10, 2014.

David Mussatt,

Chief, Regional Programs Coordination Unit.

[FR Doc. 2014–27002 Filed 11–13–14; 8:45 am]

BILLING CODE 6335–01–P

COMMISSION ON CIVIL RIGHTS

Sunshine Act Meeting

AGENCY: United States Commission on Civil Rights.

ACTION: Notice of Commission Business Meeting.

DATES: *Date and Time:* Friday, November 21, 2014; 9:30 a.m. EST.

ADDRESSES: *Place:* 1331 Pennsylvania Ave. NW., Suite 1150, Washington, DC.

FOR FURTHER INFORMATION CONTACT: Lenore Ostrowsky, Acting Chief, Public Affairs Unit (202) 376–8591.

Hearing-impaired persons who will attend the briefing and require the services of a sign language interpreter should contact Pamela Dunston at (202) 376–8105 or at *signlanguage@usccr.gov* at least seven business days before the scheduled date of the meeting.

SUPPLEMENTARY INFORMATION:

Meeting Agenda

This meeting is open to the public.

I. Approval of Agenda

II. Program Planning

- Vote on 2015 Business Meeting Calendar
- Schedule FY 2015 Briefings

- Discussion and Vote on Updating the USCCR Anti-Semitism Report
- Discussion on Staff Report re: St. Louis County, Missouri

III. Management and Operations

- CFC Campaign 2015
- Staff Director's Report

IV. State Advisory Committee (SAC) Appointments

- Alaska
- Montana
- New Mexico
- Wyoming

V. Adjourn Meeting

Dated: November 10, 2014.

Marlene Sallo,

Staff Director.

[FR Doc. 2014–27063 Filed 11–12–14; 11:15 am]

BILLING CODE 6335–01–P

COMMISSION ON CIVIL RIGHTS

South Dakota Advisory Committee

AGENCY: United States Commission on Civil Rights.

ACTION: Notice of period during which individuals may apply to be appointed to the South Dakota Advisory Committee; request for applications.

SUMMARY: Because the terms of the members of the South Dakota Advisory Committee are expiring on April 18, 2015, the United States Commission on Civil Rights hereby invites any individual who is eligible to be appointed to apply. The memberships are exclusively for the South Dakota Advisory Committee, and applicants must be residents of South Dakota to be considered. Letters of interest must be received by the Rocky Mountain Regional Office of the U.S. Commission on Civil Rights no later than December 15, 2014. Letters of interest must be sent to the address listed below.

DATES: Letters of interest for membership on the Colorado Advisory Committee should be received no later than December 15, 2014.

ADDRESSES: Send letters of interest for the South Dakota Advisory Committee to: U.S. Commission on Civil Rights, Rocky Mountain Regional Office, 999 18th Street NW., Suite 1380 South, Denver, CO 80294. Letter can also be sent via email to Evelyn Bohor at *ebohor@usccr.gov.*

FOR FURTHER INFORMATION CONTACT: David Mussatt, Chief, Regional Programs Unit, 55 W. Monroe St., Suite 410, Chicago, IL 60603, (312) 353–8311. Questions can also be directed via email to *dmussatt@usccr.gov.*

SUPPLEMENTARY INFORMATION: The South Dakota Advisory Committees (SAC) are statutorily mandated federal advisory committees of the U.S. Commission on Civil Rights pursuant to 42 U.S.C. 1975a. Under the charter for the SAC, the purpose is to provide advice and recommendations to the U.S. Commission on Civil Rights (Commission) on a broad range of civil rights matters in its state that pertain to alleged deprivations of voting rights or discrimination or denials of equal protection of the laws because of race, color, religion, sex, age, disability, or national origin, or the administration of justice. The SAC also provides assistance to the Commission in its statutory obligation to serve as a national clearinghouse for civil rights information.

The SAC consists of not more than 19 members, each of whom will serve a two-year term. Members serve as unpaid Special Government Employees who are reimbursed for travel and expenses. To be eligible to be on the SAC, applicants must be residents of South Dakota and have demonstrated expertise or interest in civil rights issues.

The Commission is an independent, bipartisan agency established by Congress in 1957 to focus on matters of race, color, religion, sex, age, disability, or national origin. Its mandate is to:

- Investigate complaints from citizens that their voting rights are being deprived,
- study and collect information about discrimination or denials of equal protection under the law,
- appraise federal civil rights laws and policies,
- serve as a national clearinghouse on discrimination laws,
- submit reports and findings and recommendations to the President and the Congress, and
- issue public service announcements to discourage discrimination.

The Commission invites any individual who is eligible to be appointed a member of the South Dakota Advisory Committee covered by this notice to send a letter of interest and a resume to the address above.

Dated: November 10, 2014.

David Mussatt,

Chief, Regional Programs Unit.

[FR Doc. 2014–27007 Filed 11–13–14; 8:45 am]

BILLING CODE P

DEPARTMENT OF COMMERCE

Submission for OMB Review; Comment Request

The Department of Commerce will submit to the Office of Management and Budget (OMB) for clearance the following proposal for collection of information under the provisions of the Paperwork Reduction Act (44 U.S.C. Chapter 35).

Agency: National Technical Information Service.

Title: Limited Access Death Master File Subscriber Certification Form.

OMB Control Number: 0692–0013.

Form Number(s): NTIS FM161.

Type of Request: Reinstatement.

Number of Respondents: 700.

Average Hours per Response: 2 hours.

Burden Hours: 1,400.

Needs and Uses: The National Technical Information Service (NTIS) Limited Access Death Master File Subscriber Certification Form (Certification Form) will be used by NTIS to collect information related to the implementation of Section 203 of the Bipartisan Budget Act of 2013 (Pub. L. 113–67) (Act). On March 26, 2014, NTIS issued an interim final rule establishing a temporary certification program for persons who seek access to the Social Security Administration's Public Death Master File (DMF) (*http://www.gpo.gov/fdsys/pkg/FR-2014-03-26/pdf/2014-06701.pdf*). The interim final rule is codified at 15 C.F.R. part 1110. Section 203 of the Act prohibits disclosure of DMF information during the three-calendar-year period following death unless the person requesting the information has been certified under a program established by the Secretary of Commerce. The Act directs the Secretary of Commerce to establish a certification program for such access to the DMF. The Secretary of Commerce has delegated the authority to carry out the DMF certification program to the Director, NTIS. The DMF Certification Form collects only information necessary for NTIS to conduct the program. This collection of information is for information necessary to support the certification process required by the Act for members of the public to be given access to the Death Master File containing information about deceased persons during the three-calendar-year period after that person's death.

The Act required implementation of the certification program ninety (90) days after enactment. NTIS requested emergency clearance of this collection of information in order to implement the certification program on March 26, 2014, and the information collection

was approved on an emergency basis through September 30, 2014. NTIS anticipates publishing a notice of proposed rulemaking in the near future and as part of that proposed rulemaking will seek clearance of a revised information collection. However, the revised information collection will not be used until a final rule is published. NTIS must continue to use the existing DMF Certification Form until the final rule is published.

Affected Public: Users who wish to obtain access to the Death Master File from NTIS.

Frequency: Annually.

Respondent's Obligation: Annually (resubmit the certification form at time of Limited Access DMF subscription renewal.

This information collection request may be viewed at reginfo.gov. Follow the instructions to view Department of Commerce collections currently under review by OMB.

Written comments and recommendations for the proposed information collection should be sent within 30 days of publication of this notice to *OIRA_Submission@omb.eop.gov* or fax to (202) 395–5806.

Dated: November 10, 2014.

Glenna Mickelson,

Management Analyst, Office of the Chief Information Officer.

[FR Doc. 2014–26997 Filed 11–13–14; 8:45 am]

BILLING CODE 3510–04–P

DEPARTMENT OF COMMERCE

International Trade Administration

[A–580–876, A–489–822]

Welded Line Pipe From the Republic of Korea and the Republic of Turkey: Initiation of Less-Than-Fair-Value Investigations

AGENCY: Enforcement and Compliance, International Trade Administration, Department of Commerce.

DATES: *Effective Date:* November 14, 2014.

FOR FURTHER INFORMATION CONTACT: David Goldberger at (202) 482–4136 (the Republic of Korea (Korea)), or Alice Maldonado at (202) 482–4682 (the Republic of Turkey (Turkey)), AD/CVD Operations, Enforcement and Compliance, U.S. Department of Commerce, 14th Street and Constitution Avenue NW., Washington, DC 20230.

SUPPLEMENTARY INFORMATION:

The Petitions

On October 16, 2014, the Department of Commerce (the Department) received antidumping duty (AD) petitions concerning imports of welded line pipe from Korea and Turkey filed in proper form on behalf of American Cast Iron Pipe Company, Energex (a division of JMC Steel Group), Maverick Tube Corporation, Northwest Pipe Company, Stupp Corporation (a division of Stupp Bros., Inc.), Tex-Tube Company, TMK IPSCO, and Welspun Tubular LLC USA (collectively, the petitioners). The AD petitions were accompanied by two countervailing duty (CVD) petitions.[1] The petitioners are domestic producers of welded line pipe.[2]

On October 21, 2014, the Department requested additional information and clarification of certain portions of the Petitions.[3] The petitioners filed responses to these requests on October 24, 2014, and October 29, 2014.[4] On October 27 and October 31, 2014, we received submissions from United States Steel Corporation (U.S. Steel), a domestic producer of welded line pipe, in support of the Petitions.

In accordance with section 732(b) of the Tariff Act of 1930, as amended (the Act), the petitioners allege that welded line pipe from Korea and Turkey is being, or is likely to be, sold in the United States at less than fair value within the meaning of section 731 of the Act and that such imports are materially injuring, or threatening material injury to, an industry in the United States. Also, consistent with section 732(b)(1) of the Act, the Petitions are accompanied by information reasonably available to the petitioners supporting their allegations.

The Department finds that the petitioners filed the Petitions on behalf of the domestic industry because the petitioners are interested parties as defined in section 771(9)(C) of the Act. The Department also finds that the petitioners demonstrated sufficient industry support with respect to the initiation of the AD investigations that the petitioners are requesting.[5]

Period of Investigation

Because the Petitions were filed on October 16, 2014, pursuant to 19 CFR 351.204(b)(1) the period of investigation for both Korea and Turkey is October 1, 2013, through September 30, 2014.

Scope of the Investigations

The product covered by these investigations is welded line pipe from Korea and Turkey. For a full description of the scope of these investigations, see the ''Scope of the Investigations'' in Appendix I of this notice.

Comments on Scope of the Investigations

During our review of the Petitions, the Department issued questions to, and received responses from, the petitioners pertaining to the proposed scope to ensure that the scope language in the Petitions would be an accurate reflection of the products for which the domestic industry is seeking relief.[6]

As discussed in the preamble to the Department's regulations,[7] we are setting aside a period for interested parties to raise issues regarding product coverage (scope). The period for scope comments is intended to provide the Department with ample opportunity to consider all comments and to consult with parties prior to the issuance of the preliminary determinations. If scope comments include factual information (*see* 19 CFR 351.102(b)(21)), all such factual information should be limited to public information. All such comments must be filed by 5:00 p.m. Eastern Standard Time (EST) on November 25, 2014, which is 20 calendar days from the signature date of this notice. Any rebuttal comments, which may include factual information, must be filed by 5:00 p.m. EST on December 5, 2014, which is 10 calendar days after the initial comments deadline.

The Department requests that any factual information the parties consider

[1] *See* Petitions for the Imposition of Antidumping and Countervailing Duties: Welded API Line Pipe from South Korea and Turkey, dated October 16, 2014 (the Petitions).

[2] *See* Volume I of the Petitions, at 2–3.

[3] *See* Letter from the Department to the petitioners entitled ''Re: Petitions for the Imposition of Antidumping and Countervailing Duties on Imports of Welded Line Pipe from the Republic of Korea and the Republic of Turkey: Supplemental Questions,'' dated October 21, 2014 (General Issues Supplemental Questionnaire), Letter from the Department to the petitioners entitled ''Re: Petition for the Imposition of Antidumping Duties on Imports of Welded Line Pipe from the Republic of Korea: Supplemental Questions,'' dated October 21, 2014, and Letter from the Department to the petitioners entitled ''Re: Petition for the Imposition of Antidumping Duties on Imports of Welded Line Pipe from the Republic of Turkey: Supplemental Questions,'' dated October 21, 2014.

[4] *See* ''Welded API Line Pipe from Korea and Turkey: Response to Supplemental Questions,'' dated October 24, 2014 (General Issues Supplement), ''Welded API Line Pipe from Korea: Response to Supplemental Questions, dated October 24, 2014, ''Welded API Line Pipe from Turkey: Response to Supplemental Questions,'' dated October 24, 2014 (Turkey AD Supplement), and ''Welded API Line Pipe from Korea and Turkey: Submission of CSI Letter of Support with 2013 Production and Revised Scope Language,'' dated October 29, 2014 (Second General Issues Supplement).

[5] *See* the ''Determination of Industry Support for the Petitions'' section below.

[6] *See* General Issues Supplemental Questionnaire; *see also* General Issues Supplement.

[7] *See Antidumping Duties; Countervailing Duties; Final rule,* 62 FR 27296, 27323 (May 19, 1997).

relevant to the scope of the investigations be submitted during this time period. However, if a party subsequently finds that additional factual information pertaining to the scope of the investigations may be relevant, the party may contact the Department and request permission to submit the additional information. All such comments must be filed on the records of the Korea and Turkey AD and CVD investigations.

Filing Requirements

All submissions to the Department must be filed electronically using Enforcement and Compliance's Antidumping and Countervailing Duty Centralized Electronic Service System (IA ACCESS).[8] An electronically-filed document must be received successfully in its entirety by the time and date it is due. Documents excepted from the electronic submission requirements must be filed manually (*i.e.,* in paper form) with Enforcement and Compliance's APO/Dockets Unit, Room 1870, U.S. Department of Commerce, 14th Street and Constitution Avenue NW., Washington, DC 20230, and stamped with the date and time of receipt by the applicable deadlines.

Comments on Product Characteristics for AD Questionnaires

The Department requests comments from interested parties regarding the appropriate physical characteristics of welded line pipe to be reported in response to the Department's AD questionnaires. This information will be used to identify the key physical characteristics of the subject merchandise in order to report the relevant factors and costs of production accurately, as well as to develop appropriate product-comparison criteria.

Interested parties may provide any information or comments that they feel are relevant to the development of an accurate list of physical characteristics. Specifically, they may provide comments as to which characteristics are appropriate to use as: (1) general product characteristics; and (2) product-comparison criteria. We note that it is not always appropriate to use all product characteristics as product-comparison criteria. We base product-comparison criteria on meaningful commercial differences among products. In other words, although there may be some physical product characteristics utilized by manufacturers to describe welded line pipe, it may be that only a select few product characteristics take into account commercially meaningful physical characteristics. In addition, interested parties may comment on the order in which the physical characteristics should be used in matching products. Generally, the Department attempts to list the most important physical characteristics first and the least important characteristics last.

In order to consider the suggestions of interested parties in developing and issuing the AD questionnaires, all comments must be filed by 5:00 p.m. EST on November 25, 2014, which is 20 calendar days from the signature date of this notice. Any rebuttal comments must be filed by 5:00 p.m. EST on December 2, 2014. All comments and submissions to the Department must be filed electronically using IA ACCESS, as explained above, on the records of the Korea and Turkey less-than-fair-value investigations.

Determination of Industry Support for the Petitions

Section 732(b)(1) of the Act requires that a petition be filed on behalf of the domestic industry. Section 732(c)(4)(A) of the Act provides that a petition meets this requirement if the domestic producers or workers who support the petition account for: (i) at least 25 percent of the total production of the domestic like product; and (ii) more than 50 percent of the production of the domestic like product produced by that portion of the industry expressing support for, or opposition to, the petition. Moreover, section 732(c)(4)(D) of the Act provides that, if the petition does not establish support of domestic producers or workers accounting for more than 50 percent of the total production of the domestic like product, the Department shall: (i) poll the industry or rely on other information in order to determine if there is support for the petition, as required by subparagraph (A); or (ii) determine industry support using a statistically valid sampling method to poll the ''industry.''

Section 771(4)(A) of the Act defines the ''industry'' as the producers as a whole of a domestic like product, or those producers whose collective output of a domestic like product constitutes a major proportion of the total domestic production of the product. Thus, to determine whether a petition has the requisite industry support, the statute directs the Department to look to producers and workers who produce the domestic like product. The International Trade Commission (ITC), which is responsible for determining whether ''the domestic industry'' has been injured, must also determine what constitutes a domestic like product in order to define the industry. While both the Department and the ITC must apply the same statutory definition regarding the domestic like product,[9] they do so for different purposes and pursuant to a separate and distinct authority. In addition, the Department's determination is subject to limitations of time and information. Although this may result in different definitions of the like product, such differences do not render the decision of either agency contrary to law.[10]

Section 771(10) of the Act defines the domestic like product as ''a product which is like, or in the absence of like, most similar in characteristics and uses with, the article subject to an investigation under this title.'' Thus, the reference point from which the domestic like product analysis begins is ''the article subject to an investigation'' (*i.e.,* the class or kind of merchandise to be investigated, which normally will be the scope as defined in the petition).

With regard to the domestic like product, the petitioners do not offer a definition of the domestic like product distinct from the scope of the investigations. Based on our analysis of the information submitted on the record, we have determined that welded line pipe, as defined in the scope of the investigations, constitutes a single domestic like product and we have analyzed industry support in terms of that domestic like product.[11]

In determining whether the petitioners have standing under section 732(c)(4)(A) of the Act, we considered

[8] *See Antidumping and Countervailing Duty Proceedings: Electronic Filing Procedures; Administrative Protective Order Procedures,* 76 FR 39263 (July 6, 2011) for details of the Department's electronic filing requirements, which went into effect on August 5, 2011. Information on help using IA ACCESS can be found at *https://iaaccess.trade.gov/help.aspx* and a handbook can be found at *https://iaaccess.trade.gov/help/Handbook%20on%20Electronic%20Filling%20Procedures.pdf.*

[9] *See* section 771(10) of the Act.

[10] *See USEC, Inc.* v. *United States,* 132 F. Supp. 2d 1, 8 (CIT 2001) (citing *Algoma Steel Corp., Ltd.* v. *United States,* 688 F. Supp. 639, 644 (CIT 1988), *aff'd* 865 F.2d 240 (Fed. Cir. 1989)).

[11] For a discussion of the domestic like product analysis in this case, see Antidumping Duty Investigation Initiation Checklist: Welded Line Pipe from the Republic of Korea (Korea AD Initiation Checklist) at Attachment II, Analysis of Industry Support for the Antidumping and Countervailing Duty Petitions Covering Welded Line Pipe from the Republic of Korea and the Republic of Turkey (Attachment II); and Antidumping Duty Investigation Initiation Checklist: Welded Line Pipe from the Republic of Turkey (Turkey AD Initiation Checklist), at Attachment II. These checklists are dated concurrently with this notice and are on file electronically via IA ACCESS. Access to documents filed via IA ACCESS is also available in the Central Records Unit, Room 7046 of the main Department of Commerce building.

the industry support data contained in the Petitions with reference to the domestic like product as defined in the ''Scope of the Investigations,'' in Appendix I of this notice. To establish industry support, the petitioners provided their production of the domestic like product in 2013, as well as the production of a company that supports the Petitions, and compared this to the total production of the domestic like product for the entire domestic industry.[12]

On October 27, 2014, we received a submission from U.S. Steel, a domestic producer of welded line pipe. In the submission, U.S. Steel states that it supports the AD and CVD petitions on welded line pipe from Korea and Turkey.[13] In an additional submission on October 31, 2014, U.S. Steel provided its 2013 production of the domestic like product.[14]

We have relied upon data that the petitioners and U.S. Steel provided for purposes of measuring industry support.[15]

Based on information provided in the Petitions, supplemental submissions, and other information readily available to the Department, we determine that the petitioners have met the statutory criteria for industry support under section 732(c)(4)(A)(i) of the Act because the domestic producers (or workers) who support the Petitions account for at least 25 percent of the total production of the domestic like product.[16] Based on information provided in the Petitions, supplemental submissions, and submissions from U.S. Steel, the domestic producers (or workers) have met the statutory criteria for industry support under section 732(c)(4)(A)(ii) of the Act because the domestic producers (or workers) who support the Petitions account for more than 50 percent of the production of the domestic like product produced by that portion of the industry expressing support for, or opposition to, the Petitions. Accordingly, the Department determines that the Petitions were filed on behalf of the domestic industry within the meaning of section 732(b)(1) of the Act.[17]

The Department finds that the petitioners filed the Petitions on behalf of the domestic industry because they are interested parties as defined in section 771(9)(C) of the Act and they have demonstrated sufficient industry support with respect to the AD investigations that they are requesting the Department initiate.[18]

Allegations and Evidence of Material Injury and Causation

The petitioners allege that the U.S. industry producing the domestic like product is being materially injured, or is threatened with material injury, by reason of the imports of the subject merchandise sold at less than fair value. In addition, the petitioners allege that subject imports exceed the negligibility threshold provided for under section 771(24)(A) of the Act.[19]

The petitioners contend that the industry's injured condition is illustrated by reduced market share, underselling and price depression or suppression, lost sales and revenues, declining shipments, reduced production capacity, and a decline in financial performance.[20] We assessed the allegations and supporting evidence regarding material injury, threat of material injury, and causation, and we determined that these allegations are properly supported by adequate evidence and meet the statutory requirements for initiation.[21]

Allegations of Sales at Less Than Fair Value

The following is a description of the allegations of sales at less than fair value upon which the Department based its decision to initiate investigations of imports of welded line pipe from Korea and Turkey. The sources of data for the deductions and adjustments relating to U.S. price and normal value (NV) are discussed in greater detail in the country-specific initiation checklists.

Export Price

For Korea, the petitioners based U.S. price on price quotes from a trading company, which sells welded line pipe produced by a Korean producer, offered for sale to a U.S. customer. The petitioners made deductions for movement and other expenses consistent with the sales and delivery terms of the price quotes. They also made a deduction for the trading company mark-up.[22]

For Turkey, the petitioners based U.S. price on the average unit value for U.S. imports of welded line pipe under Harmonized Tariff Schedule of the United States (HTSUS) number 7306.19.1050, obtained from the ITC's Dataweb for the period of October 2013 through August 2014.[23] The petitioners assert that this HTSUS subheading includes welded line pipe most similar to that found in the home market price quote. The petitioners made no adjustments to U.S. price for movement costs for shipping the merchandise from the port in Turkey to the United States because the AUV is based on customs values which do not include these expenses. Further, the petitioners conservatively did not deduct foreign inland freight expenses from the U.S. price because known producers are in close proximity to the port.[24]

Normal Value

For Korea and Turkey, the petitioners based NV on price quotes provided for the foreign like product produced in the subject country by producer(s) of welded line pipe in that country and sold or offered for sale in the subject country by producer(s) of welded line pipe.[25] Consistent with the terms of sale and delivery, the petitioners did not make deductions for movement or other expenses.[26]

Fair Value Comparisons

Based on the data provided by the petitioners, there is reason to believe that imports of welded line pipe from Korea and Turkey are being, or are likely to be, sold in the United States at less than fair value. Based on comparisons of export price to NV in accordance with section 773(a) of the Act, the estimated dumping margins for welded line pipe from Korea range from 48.49 percent to 202.31 percent.[27] The estimated dumping margin for Turkey is 9.85 percent.[28]

[12] *See* General Issues Supplement, at 3–5 and Exhibits 3 and 4; *see also* Second General Issues Supplement, at Attachment 1.

[13] *See* Letter from U.S. Steel, dated October 27, 2014, at 1–2.

[14] *See* Letter from U.S. Steel to the Department entitled ''Re: Welded Line Pipe from the Republic of Korea and the Republic of Turkey,'' dated October 31, 2014.

[15] *See* Korea AD Initiation Checklist and Turkey AD Initiation Checklist, at Attachment II.

[16] *Id.*

[17] *Id.*

[18] *Id.*

[19] *See* General Issues Supplement, at 6 and Exhibit 7.

[20] *See* Volume I of the Petitions, at 14–18, 21–27, and Exhibits I–2, I–6, and I–8 through I–10; *see also* General Issues Supplement, at 6–7 and Exhibits 7 and 8.

[21] *See* Korea AD Initiation Checklist and Turkey AD Initiation Checklist, at Attachment III, Analysis of Allegations and Evidence of Material Injury and Causation for the Antidumping and Countervailing Duty Petitions Covering Welded Line Pipe from the Republic of Korea and the Republic of Turkey.

[22] *See* Korea AD Initiation Checklist.

[23] *See* Turkey AD Initiation Checklist. The petitioners noted that September 2014 import data was not available through the ITC's Dataweb at the time of the Turkey AD Supplement. *See* Turkey AD Supplement, at 1.

[24] *See* Turkey AD Initiation Checklist.

[25] *See* Korea AD Initiation Checklist and Turkey AD Initiation Checklist.

[26] *Id.*

[27] *See* Korea AD Initiation Checklist.

[28] *See* Turkey AD Supplement, at 3.

Initiation of Less-Than-Fair-Value Investigations

Based upon the examination of the AD Petitions on welded line pipe from Korea and Turkey, we find that the Petitions meet the requirements of section 732 of the Act. Therefore, we are initiating AD investigations to determine whether imports of welded line pipe from Korea and Turkey are being, or are likely to be, sold in the United States at less than fair value. In accordance with section 733(b)(1)(A) of the Act and 19 CFR 351.205(b)(1), unless postponed, we will make our preliminary determinations no later than 140 days after the date of this initiation.

Respondent Selection

The petitioners named 13 companies as producers/exporters of welded line pipe from Korea, and 13 from Turkey.[29] Following standard practice in AD investigations involving market economy countries, the Department will, where appropriate, select respondents based on U.S. Customs and Border Protection (CBP) data for U.S. imports of welded line pipe during the period of investigation under HTSUS numbers: 7305.11.1030; 7305.11.5000; 7305.12.1030; 7305.12.5000; 7305.19.1030; 7305.19.5000; 7306.19.1010; 7306.19.1050; 7306.19.5110; and 7306.19.5150. We intend to release CBP data under Administrative Protective Order (APO) to all parties with access to information protected by APO shortly after the announcement of these case initiations. The Department invites comments regarding CBP data and respondent selection within five calendar days of publication of this **Federal Register** notice. Comments must be filed electronically using IA ACCESS. An electronically-filed document must be received successfully in its entirety by the Department's electronic records system, IA ACCESS, by 5 p.m. Eastern time by the date noted above. We intend to make our decision regarding respondent selection within 20 days of publication of this **Federal Register** notice. Interested parties must submit applications for disclosure under APO in accordance with 19 CFR 351.305(b). Instructions for filing such applications may be found on the Department's Web site at *http://enforcement.trade.gov/apo.*

Distribution of Copies of the Petitions

In accordance with section 732(b)(3)(A) of the Act and 19 CFR 351.202(f), copies of the public version of the Petitions have been provided to the governments of Korea and Turkey via IA ACCESS. Because of the particularly large number of producers/exporters identified in the Petitions, the Department considers the service of the public version of the Petitions to the foreign producers/exporters to be satisfied by the provision of the public version of the Petitions to the governments of Korea and Turkey, consistent with 19 CFR 351.203(c)(2).

ITC Notification

We have notified the ITC of our initiation, as required by section 732(d) of the Act.

Preliminary Determinations by the ITC

The ITC will preliminarily determine, within 45 days after the date on which the Petitions were filed, whether there is a reasonable indication that imports of welded line pipe from Korea and/or Turkey are materially injuring or threatening material injury to a U.S. industry.[30] A negative ITC determination for any country will result in the investigation being terminated with respect to that country;[31] otherwise, these investigations will proceed according to statutory and regulatory time limits.

Submission of Factual Information

On April 10, 2013, the Department published *Definition of Factual Information and Time Limits for Submission of Factual Information: Final Rule,* 78 FR 21246 (April 10, 2013), which modified two regulations related to AD and CVD proceedings: the definition of factual information (19 CFR 351.102(b)(21)), and the time limits for the submission of factual information (19 CFR 351.301). The final rule identifies five categories of factual information in 19 CFR 351.102(b)(21), which are summarized as follows: (i) Evidence submitted in response to questionnaires; (ii) evidence submitted in support of allegations; (iii) publicly available information to value factors under 19 CFR 351.408(c) or to measure the adequacy of remuneration under 19 CFR 351.511(a)(2); (iv) evidence placed on the record by the Department; and (v) evidence other than factual information described in (i)–(iv). The final rule requires any party, when submitting factual information, to specify under which subsection of 19 CFR 351.102(b)(21) the information is being submitted and, if the information is submitted to rebut, clarify, or correct factual information already on the record, to provide an explanation identifying the information already on the record that the factual information seeks to rebut, clarify, or correct. The final rule also modified 19 CFR 351.301 so that, rather than providing general time limits, there are specific time limits based on the type of factual information being submitted. These modifications are effective for all proceeding segments initiated on or after May 10, 2013, and thus are applicable to these investigations. Interested parties should review the final rule, available at *http://enforcement.trade.gov/frn/2013/1304frn/2013-08227.txt* prior to submitting factual information in these investigations.

Revised Extension of Time Limits Regulation

On September 20, 2013, the Department modified its regulation concerning the extension of time limits for submissions in AD and CVD proceedings.[32] The modification clarifies that parties may request an extension of time limits before a time limit established under 19 CFR 351 expires, or as otherwise specified by the Secretary. In general, an extension request will be considered untimely if it is filed after the time limit established under Part 351 expires. For submissions which are due from multiple parties simultaneously, an extension request will be considered untimely if it is filed after 10:00 a.m. on the due date. Examples include but are not limited to: (1) Case and rebuttal briefs, filed pursuant to 19 CFR 351.309; (2) factual information to value factors under 19 CFR 351.408(c), or to measure the adequacy of remuneration under 19 CFR 351.511(a)(2) filed pursuant to 19 CFR 351.301(c)(3) and rebuttal, clarification and correction information filed pursuant to 19 CFR 351.301(c)(3)(iv); (3) comments concerning the selection of a surrogate country and surrogate values and rebuttal; (4) comments concerning CBP data; and (5) quantity and value questionnaires. Under certain circumstances, the Department may elect to specify a different time limit by which extension requests will be considered untimely for submissions which are due from multiple parties simultaneously. In such a case, the Department will inform parties in the letter or memorandum setting forth the deadline (including a specified time) by which extension requests must be filed to be considered timely. This modification also requires that an extension request must be made in a separate, stand-alone submission, and

[29] *See* Volume I of the Petitions, at Exhibit I–4.

[30] *See* section 733(a) of the Act.

[31] *Id.*

[32] *See Extension of Time Limits; Final Rule,* 78 FR 57790 (September 20, 2013).

clarifies the circumstances under which the Department will grant untimely-filed requests for the extension of time limits. These modifications are effective for all segments initiated on or after October 21, 2013. Interested parties should review *Extension of Time Limits; Final Rule,* available at *http://www.gpo.gov/fdsys/pkg/FR-2013-09-20/html/2013-22853.htm,* prior to submitting factual information in these investigations.

Certification Requirements

Any party submitting factual information in an AD or CVD proceeding must certify to the accuracy and completeness of that information.[33] Parties are hereby reminded that revised certification requirements are in effect for company/government officials, as well as their representatives. Investigations initiated on the basis of petitions filed on or after August 16, 2013, and other segments of any AD or CVD proceedings initiated on or after August 16, 2013, should use the formats for the revised certifications provided at the end of the *Final Rule.*[34] The Department intends to reject factual submissions if the submitting party does not comply with the applicable revised certification requirements.

Notification to Interested Parties

Interested parties must submit applications for disclosure under APO in accordance with 19 CFR 351.305. On January 22, 2008, the Department published *Antidumping and Countervailing Duty Proceedings: Documents Submission Procedures; APO Procedures,* 73 FR 3634 (January 22, 2008). Parties wishing to participate in these investigations should ensure that they meet the requirements of these procedures (*e.g.,* the filing of letters of appearance as discussed in 19 CFR 351.103(d)).

This notice is issued and published pursuant to section 777(i) of the Act.

Date: November 5, 2014.

Ronald K. Lorentzen,

Acting Assistant Secretary for Enforcement and Compliance.

Appendix I

Scope of the Investigations

The merchandise covered by these investigations is circular welded carbon and alloy steel (other than stainless steel) pipe of a kind used for oil or gas pipelines (welded line pipe), not more than 24 inches in nominal outside diameter, regardless of wall thickness, length, surface finish, end finish, or stenciling. Welded line pipe is normally produced to the American Petroleum Institute (API) specification 5L, but can be produced to comparable foreign specifications, to proprietary grades, or can be non-graded material. All pipe meeting the physical description set forth above, including multiple-stenciled pipe with an API or comparable foreign specification line pipe stencil is covered by the scope of these investigations.

The welded line pipe that is subject to these investigations is currently classifiable in the Harmonized Tariff Schedule of the United States (HTSUS) under subheadings 7305.11.1030, 7305.11.5000, 7305.12.1030, 7305.12.5000, 7305.19.1030, 7305.19.5000, 7306.19.1010, 7306.19.1050, 7306.19.5110, and 7306.19.5150. The subject merchandise may also enter in HTSUS 7305.11.1060 and 7305.12.1060. While the HTSUS subheadings are provided for convenience and customs purposes, the written description of the scope of these investigations is dispositive.

[FR Doc. 2014–26894 Filed 11–13–14; 8:45 am]

BILLING CODE 3510–DS–P

[33] *See* section 782(b) of the Act.

[34] *See Certification of Factual Information To Import Administration During Antidumping and Countervailing Duty Proceedings,* 78 FR 42678 (July 17, 2013) (*Final Rule*); *see also* frequently asked questions regarding the *Final Rule,* available at *http://enforcement.trade.gov/tlei/notices/factual_info_final_rule_FAQ_07172013.pdf.*

DEPARTMENT OF COMMERCE

National Oceanic and Atmospheric Administration

Notice of Availability for a Finding of No Significant Impact and Environmental Assessment for Potential Slant Test Well Project in the Monterey Bay National Marine Sanctuary

AGENCY: Monterey Bay National Marine Sanctuary (MBNMS), Office of National Marine Sanctuaries (ONMS), National Ocean Service (NOS), National Oceanic and Atmospheric Administration (NOAA), Department of Commerce (DOC).

ACTION: Notice of availability for final environmental assessment and finding of no significant impact.

SUMMARY: Monterey Bay National Marine Sanctuary (MBNMS), which is part of the Office of National Marine Sanctuaries (ONMS), National Ocean Service (NOS), National Oceanic and Atmospheric Administration (NOAA), has finalized an Environmental Assessment (EA) which analyzed the potential impacts of a slant test well project proposed by California American Water, a privately-owned water and wastewater company, and prepared a Finding of No Significant Impact (FONSI) to the environmental resources within MBNMS and adjacent shoreline areas. The proposed project described in the EA has been evaluated for consistency with the National Marine Sanctuaries Act (16 U.S.C. 1431 *et seq.*), sanctuary goals and objectives, and ONMS and MBNMS permitting regulations. The environmental impacts of the permitted action are described in the EA, pursuant to the National Environmental Policy Act (42 U.S.C. 4321 *et seq.*) and related implementing regulations. The final EA and FONSI are available for download on the MBNMS Web site at: *http://montereybay.noaa.gov/new/welcome.html#calam.*

ADDRESSES: You may review these documents, identifying #NOAA–NOS–2014–0078, at *www.regulations.gov.*

FOR FURTHER INFORMATION CONTACT: Bridget Hoover, Water Quality Protection Program Director, Monterey Bay National Marine Sanctuary, 99 Pacific Street, Building 455a, Monterey, CA 93940. Phone: (831) 647–4217.

SUPPLEMENTARY INFORMATION: California American Water proposes development and temporary operation of a slant test well to obtain information regarding the geologic, hydrogeologic, and water quality characteristics of the underlying aquifers. MBNMS proposes to authorize two state agency permits or other approvals that would allow development of California American Water's proposed slant test well project. The data obtained during the 24-month testing and monitoring phase would be used to facilitate the planning and final design of a proposed subsurface slant well intake system and desalination plant to serve as the primary future water supply source of the Monterey Peninsula. The slant test well would be drilled in the coastal foredune area of an existing CEMEX sand mining facility in the central coast of California, and would extend diagonally under the floor of the Pacific Ocean into the submerged lands of MBNMS. The slant test well would pump up to 2,500 gallons per minute from the underlying aquifers for a 24-month operational testing and monitoring period. The pumped water, consisting of untreated, tidally-influenced groundwater, would be discharged into MBNMS via an existing ocean outfall pipeline extending approximately 2 miles offshore. The project includes the development of up to four clusters of monitoring wells to evaluate the hydrogeologic response to pumping activities. Upon completion of the testing and monitoring activities, the slant test well and all appurtenant facilities would be decommissioned, excavated, and removed, and the site restored to its original condition.

The project requires authorization of a state permit from MBNMS for the

proposed discharge into MBNMS waters and proposed drilling activities in the submerged lands of MBNMS. The proposed project described in the EA has been evaluated for consistency with the National Marine Sanctuaries Act (16 U.S.C. 1431 *et seq.*), sanctuary goals and objectives, and ONMS and MBNMS permitting regulations. The environmental impacts of the permitted action are described in the EA, pursuant to the National Environmental Policy Act (42 U.S.C. 4321 *et seq.*) and related implementing regulations. Under the National Environmental Policy Act, a draft EA was completed by MBNMS and public comments were received for a period of 30 days between June 25, 2014 and July 25, 2014. Following public comment, the EA was finalized and a FONSI was prepared in October 2014. The public comments received can be found in the Appendix of the EA. The final EA and FONSI are available for download on the MBNMS Web site at: *http://montereybay.noaa.gov/new/welcome.html#calam.*

Dated: November 7, 2014.

Daniel J. Basta,

Director, Office of National Marine Sanctuaries.

[FR Doc. 2014–27138 Filed 11–13–14; 8:45 am]

BILLING CODE 3510–NK–P

DEPARTMENT OF COMMERCE

National Oceanic and Atmospheric Administration

RIN 0648–XD618

Fisheries of the Gulf of Mexico; Southeast Data, Assessment, and Review (SEDAR); Public Meetings

AGENCY: National Marine Fisheries Service (NMFS), National Oceanic and Atmospheric Administration (NOAA), Commerce.

ACTION: Notice of SEDAR 42 post-data workshop webinar for Gulf of Mexico Red Grouper.

SUMMARY: The SEDAR 42 assessment of the Gulf of Mexico Red Grouper: a Data Workshop; a series of Assessment webinars; and a Review Workshop. See **SUPPLEMENTARY INFORMATION**.

DATES: The SEDAR 42 post-data workshop webinar will be held on Tuesday, December 16, 2014 from 10 a.m. until 12 p.m. central standard time (CST).

ADDRESSES:

Meeting address: The meeting will be held via webinar. The webinar is open to members of the public. Those interested in participating should contact Julie A. Neer at SEDAR (see **FOR FURTHER INFORMATION CONTACT** below) to request an invitation providing webinar access information. Please request webinar invitations at least 24 hours in advance of the webinar.

SEDAR address: 4055 Faber Place Drive, Suite 201, N. Charleston, SC 29405.

FOR FURTHER INFORMATION CONTACT: Julie A. Neer, SEDAR Coordinator; telephone: (843) 571–4366; email: *julie.neer@safmc.net.*

SUPPLEMENTARY INFORMATION: The Gulf of Mexico, South Atlantic, and Caribbean Fishery Management Councils, in conjunction with NOAA Fisheries and the Atlantic and Gulf States Marine Fisheries Commissions, have implemented the Southeast Data, Assessment and Review (SEDAR) process, a multi-step method for determining the status of fish stocks in the Southeast Region. SEDAR is a multi-step process including: (1) Data Workshop; (2) Assessment Workshop and a series of Assessment webinars; and (3) Review Workshop. The product of the Data Workshop is a report which compiles and evaluates potential datasets and recommends which datasets are appropriate for assessment analyses. The assessment webinars produce a report which describes the fisheries, evaluates the status of the stock, estimates biological benchmarks, projects future population conditions, and recommends research and monitoring needs. The assessment is independently peer reviewed at the Review Workshop. The product of the Review Workshop is a Summary documenting panel opinions regarding the strengths and weaknesses of the stock assessment and input data. Participants for SEDAR Workshops are appointed by the Gulf of Mexico, South Atlantic, and Caribbean Fishery Management Councils and NOAA Fisheries Southeast Regional Office, Highly Migratory Species Management Division, and Southeast Fisheries Science Center. Participants include: data collectors and database managers; stock assessment scientists, biologists, and researchers; constituency representatives including fishermen, environmentalists, and non-governmental organizations (NGOs); international experts; and staff of Councils, Commissions, and state and federal agencies.

The items of discussion during the data webinar are as follows:

Participants will discuss and review data analyses and decisions since the Data Workshop.

Although non-emergency issues not contained in this agenda may come before this group for discussion, those issues may not be the subject of formal action during this meeting. Action will be restricted to those issues specifically identified in this notice and any issues arising after publication of this notice that require emergency action under section 305(c) of the Magnuson-Stevens Fishery Conservation and Management Act, provided the public has been notified of the intent to take final action to address the emergency.

Special Accommodations

This meeting is accessible to people with disabilities. Requests for auxiliary aids should be directed to the SEDAR office (see **ADDRESSES**) at least 10 business days prior to the meeting.

Note: The times and sequence specified in this agenda are subject to change.

Authority: 16 U.S.C. 1801 *et seq.*

Dated: November 10, 2014.

Tracey L. Thompson,

Acting Deputy Director, Office of Sustainable Fisheries, National Marine Fisheries Service.

[FR Doc. 2014–27001 Filed 11–13–14; 8:45 am]

BILLING CODE 3510–22–P

DEPARTMENT OF COMMERCE

National Oceanic and Atmospheric Administration

RIN 0648–XD614

South Atlantic Fishery Management Council; Public Meeting

AGENCY: National Marine Fisheries Service (NMFS), National Oceanic and Atmospheric Administration (NOAA), Commerce.

ACTION: Notice of public meeting of the South Atlantic Fishery Management Council (SAFMC).

SUMMARY: The South Atlantic Fishery Management Council (Council) will hold meetings of the: Habitat and Environmental Protection Committee; Protected Resources Committee; Personnel Committee (closed session); Advisory Panel Selection Committee (closed session); Southeast Data, Assessment and Review (SEDAR) Committee; Snapper Grouper Committee; a joint meeting of the Dolphin Wahoo Committee and Snapper Grouper Committee; King & Spanish Mackerel Committee; Executive Finance Committee; Golden Crab Committee; Data Collection Committee; and a meeting of the Full Council. The Council will also hold a Council Member Visioning Project Workshop

and receive a presentation on the Biscayne National Park Fishery Management Plan as part of the meeting. The Council will take action as necessary. The Council will also hold an informal public question and answer session regarding agenda items and a formal public comment session.

DATES: The Council meeting will be held from 9 a.m. on Monday, December 1, 2014 until 1:30 p.m. on Friday, December 5, 2014.

ADDRESSES:

Meeting address: The meeting will be held at the Doubletree Riverfront Hotel, 100 Middle Street, New Bern, NC 28560; telephone: (252) 638–3585.

Council address: South Atlantic Fishery Management Council, 4055 Faber Place Drive, Suite 201, N. Charleston, SC 29405.

FOR FURTHER INFORMATION CONTACT: Kim Iverson, Public Information Officer, SAFMC; telephone: (843) 571–4366 or toll free (866) SAFMC–10; fax: (843) 769–4520; email: *kim.iverson@safmc.net.*

SUPPLEMENTARY INFORMATION: The items of discussion in the individual meeting agendas are as follows:

Council Visioning Workshop, Monday, December 1, 2014, 9 a.m. Until 12 Noon

Council members will receive a recap the October 2014 Visioning Workshop, review the draft Snapper Grouper goals and objectives, continue to work on the Visioning process and provide direction to staff.

Presentation: Biscayne National Park Fishery Management Plan, Monday, December 1, 2014, 1:30 p.m. Until 2:30 p.m.

Council members will receive a presentation on the Biscayne National Park Fishery Management Plan.

Habitat and Environmental Protection Committee, Monday, December 1, 2014, 2:30 p.m. Until 4 p.m.

1. The Committee will receive an update on the status of Amendment 8 to the Coral Fishery Management Plan addressing expansion of deepwater coral Habitat Areas of Particular Concern, receive an update on the rock shrimp Vessel Monitoring System (VMS) and bycatch analysis, and provide direction to staff.

2. The Committee will receive a briefing on the proposed nomination for an Oculina National Marine Sanctuary.

Scientific and Statistical Committee (SSC) Selection Committee, Monday, December 1, 2014, 4 p.m. Until 4:30 p.m.

The Committee will review the SSC polices and provide guidance to staff on any policy revisions.

Protected Resources Committee, Monday, December 1, 2014, 4:30 p.m. Until 5:30 p.m.

1. The Committee will receive a report on formal consultations and other Protected Resources updates, and receive an overview of the Nassau Grouper Proposed Rule. The committee will discuss and take action as necessary.

2. The Committee will receive an overview of the Atlantic Large Whale Take Reduction Plan requirements, discuss and take action as necessary. The Committee will also receive updates on American Eel status and the Atlantic sturgeon stock assessment.

Personnel Committee, Tuesday, December 2, 2014, 8:30 a.m. Until 9:30 a.m. (Closed Session)

The Committee will conduct the Executive Director's performance review and receive a briefing on proposed changes to the staff's health insurance.

Advisory Panel Selection Committee, Tuesday, December 2, 2014, 9:30 a.m. Until 11 a.m. (Closed Session)

The Committee will review applications for open seats and provide recommendations to Council for consideration.

SEDAR Committee, Tuesday, December 2, 2014, 11 a.m. Until 12 Noon

The Committee will receive an update on SEDAR activities and develop guidance for the Council's SEDAR Steering Committee members.

Snapper Grouper Committee, Tuesday, December 2, 2014, 1:30 p.m. Until 5:30 p.m. and Wednesday, December 3, 2014 From 8:30 a.m. Until 5 p.m.

1. The Committee will receive an update on the status of amendments currently under review, a report from the Snapper Grouper Advisory Panel, and a report from the Scientific and Statistical Committee.

2. The Committee will receive an overview of Snapper Grouper Regulatory Amendment 16 addressing the current seasonal closure for the black sea bass pot fishery, and presentations on analyses conducted by Council staff, analyses conducted by NOAA Fisheries Southeast Regional Office, and on risk of entanglement changes for pot gear since the 2006 Biological Opinion from NOAA Fisheries. The Committee will modify the document, choose preferred alternatives if possible, and is scheduled to recommend approval of the amendment for public hearings.

3. The Committee will receive an overview of Snapper Grouper Regulatory Amendment 22 addressing proposed management measures for gag and wreckfish and public comment received. The Committee will review the document, modify as necessary and is scheduled to recommend approving the amendment for formal Secretarial review.

4. The Committee will receive an overview of Snapper Grouper Amendment 22 addressing the use of tags to track harvest. The Committee will receive a presentation from the North Carolina Division of Marine Fisheries on the Catch Card Program, discuss the draft amendment, and provide guidance to staff.

5. The Committee will receive an overview of Snapper Grouper Amendment 36 pertaining to Spawning Special Management Zones. The Committee will receive a presentation on observations of spawning activity, review the amendment, modify as needed, and provide guidance to staff.

6. The Committee will receive an overview of Snapper Grouper Amendment 35 addressing the removal of species from the Snapper Grouper Fishery Management Unit and measures affecting endorsements for the commercial golden tilefish fishery. The Committee will review the amendment, modify as appropriate, and is scheduled to approve the amendment for public hearing.

Note: There will be an informal public question and answer session with the NMFS Regional Administrator and the Council Chairman on Wednesday, December 3, 2014, beginning at 5:30 p.m.

Joint Snapper Grouper Committee and Dolphin Wahoo Committee, Thursday, December 4, 2014, 8:30 a.m. Until 10:30 a.m.

1. The Committees will receive an update on the status of commercial and recreational catches versus annual catch limits (ACLs) for dolphin and wahoo. The Committees will also receive an overview of Dolphin Wahoo Amendment 7/Snapper Grouper Amendment 33 pertaining to measures to allow fillets to be brought back into the U.S. Exclusive Economic Zone from The Bahamas. The Committees will review the Decision Document, modify the amendment as appropriate, and is scheduled to approve the amendment for formal Secretarial review.

2. The Committees will receive an overview of the Generic Accountability Measures and Dolphin Allocation Amendment, review the Decision Document, modify the amendment as appropriate, and is scheduled to approve the amendment for Secretarial review.

King and Spanish Mackerel Committee, Thursday, December 4, 2014, 10:30 a.m. Until 12 Noon

1. The Committee will receive an update on the status of amendments under formal review and a report from the Gulf of Mexico Fishery Management Council meeting.

2. The Committee will receive overview of the SEDAR 38 stock assessment for king mackerel, receive a report from the SSC, and take action as necessary to specify any changes to the ACLs through the development of future amendments.

3. The Committee will receive an overview of a Discussion Paper for Amendment 24 addressing ACLs and allocations for Atlantic Spanish Mackerel and provide direction to staff.

Executive Finance Committee, Thursday, December 4, 2014, 1:30 p.m. Until 2:30 p.m.

1. The Committee will receive an update on the status of the Calendar Year 2014 budget expenditures, review the Council Follow Up document and priorities, receive an update on Joint South Florida Committee issues and address other issues as appropriate.

Golden Crab Committee, Thursday, December 4, 2014, 2:30 p.m. Until 3:30 p.m.

1. The Committee will receive an update on commercial catches versus the ACL for golden crab.

2. The Committee will receive an overview of the Generic Accountability Measures and Dolphin Allocation Amendment, review and modify the amendment as appropriate, and is scheduled to approve the amendment for submission to the Secretary of Commerce.

Data Collection Committee, Thursday, December 4, 2014, 3:30 p.m. Until 5 p.m.

1. The Committee will receive an update on the status of work on Bycatch Reporting in the Southeast from NOAA Fisheries, a presentation on the Electronic Technology Implementation Plan for data collection and monitoring, an overview status update on the Implementation Plan for Commercial Logbook Electronic Reporting, and a presentation on the status of the commercial electronic logbook pilot project. The Committee will provide direction to staff as appropriate.

2. The Committee will also receive an overview of the Joint South Atlantic and Gulf Council Generic Charterboat Reporting Amendment, including actions by the Gulf of Mexico Fishery Management Council, a final report from the Technical Committee, and provide guidance to staff as appropriate.

Note: A formal public comment session will be held on Thursday, December 4, 2014, beginning at 5:30 p.m. Public comment will be accepted on the following items scheduled for final Council action at this meeting: (1) Snapper Grouper Regulatory Amendment 22 (gag and wreckfish); (2) Dolphin Wahoo Amendment 7/Snapper Grouper Amendment 33 (fillets from The Bahamas); and (3) Generic Accountability Measures and Dolphin Allocation Amendment. Following comment on these amendments, public comment will be accepted regarding any other items on the Council agenda. The Chairman, based on the number of individuals wishing to comment, will determine the amount of time provided to each commenter.

Council Session: Friday, December 5, 2014, 8:30 a.m. Until 1:30 p.m.

8:30 a.m.–8:45 a.m.: Call the meeting to order, adopt the agenda, and approve the September 2014 minutes.

8:45 a.m.–9:15 a.m.: The Council will receive a report from the Snapper Grouper Committee and is scheduled to either approve or disapprove Regulatory Amendment 22 to the Snapper Grouper Fishery Management Plan for formal Secretarial review. The Council will also consider approving or disapproving Amendment 35 and Regulatory Amendment 16 for public hearings, consider other Committee recommendations and take action as appropriate.

9:15 a.m.–9:30 a.m.: The Council will receive a report from the King and Spanish Mackerel Committee, consider Committee recommendations and take action as appropriate.

9:30 a.m.–9:45 a.m.: The Council will receive a report from the SSC Selection Committee, consider Committee recommendations and take action as appropriate.

9:45 a.m.–10 a.m.: The Council will receive the Council Visioning Workshop Report, consider recommendations and take action as appropriate.

10 a.m.–10:15 a.m.: The Council will receive a report from the Habitat Committee, consider recommendations and take action as appropriate.

10:15 a.m.–10:30 a.m.: The Council will receive a report from the Protected Resources Committee, consider committee recommendations and take action as appropriate.

10:30 a.m.–10:45 a.m.: The Council will receive a report from the Advisory Panel Selection Committee, consider Committee recommendations for appointment/reappointment of new members and will take action as appropriate. The Council will consider other Committee recommendations and take action as appropriate.

10:45 a.m.–11 a.m.: The Council will receive a report from the SEDAR Committee, consider Committee recommendations, and take action as appropriate.

11 a.m.–11:15 a.m.: The Council will receive a report from the Joint Dolphin Wahoo and Snapper Grouper Committees and approve or disapprove Dolphin Wahoo Amendment 7 and Snapper Grouper Amendment 33 (fillets from the Bahamas) for formal Secretarial review. The Council will consider other Committee recommendations and take action as appropriate.

11:15 a.m.–11:30 a.m.: The Council will receive a report from the Executive Finance Committee, approve the Council Follow Up and Priorities, take action on the South Florida Management issues as appropriate, and consider Committee recommendations and take action as appropriate.

11:30 a.m.–11:45 a.m.: The Council will receive a report from the Golden Crab Committee, approve or disapprove the Generic Accountability Measures and Dolphin Allocation Amendment for formal review, consider other Committee recommendations and take action as appropriate.

11:45 a.m.–12 noon: The Council will receive a report from the Data Collection Committee, consider Committee recommendations and take action as appropriate.

12 noon–1:30 p.m.: The Council will receive status reports from NOAA Fisheries SERO and the Southeast Fisheries Science Center. The Council will review and develop recommendations on Experimental Fishing Permits as necessary; review agency and liaison reports; and discuss other business and upcoming meetings.

Documents regarding these issues are available from the Council office (see **ADDRESSES**).

Although non-emergency issues not contained in this agenda may come before these groups for discussion, those issues may not be the subject of formal action during these meetings. Action will be restricted to those issues specifically identified in this notice and any issues arising after publication of this notice that require emergency action under section 305(c) of the

Magnuson-Stevens Fishery Conservation and Management Act, provided the public has been notified of the Council's intent to take final action to address the emergency.

Special Accommodations

These meetings are physically accessible to people with disabilities. Requests for auxiliary aids should be directed to the council office (see **ADDRESSES**) 3 days prior to the meeting.

Note: The times and sequence specified in this agenda are subject to change.

Authority: 16 U.S.C. 1801 *et seq.*

Dated: November 10, 2014.

Tracey L. Thompson,

Acting Deputy Director, Office of Sustainable Fisheries, National Marine Fisheries Service.

[FR Doc. 2014–27000 Filed 11–13–14; 8:45 am]

BILLING CODE 3510–22–P

DEPARTMENT OF COMMERCE

National Oceanic and Atmospheric Administration

Availability of Seats for National Marine Sanctuary Advisory Councils

AGENCY: Office of National Marine Sanctuaries (ONMS), National Ocean Service (NOS), National Oceanic and Atmospheric Administration (NOAA), Department of Commerce (DOC).

ACTION: Notice and request for applications.

SUMMARY: ONMS is seeking applications for vacant seats for 7 of its 13 national marine sanctuary advisory councils (advisory councils). Vacant seats, including positions (i.e., primary member and alternate), for each of the advisory councils are listed in this notice under Supplementary Information. Applicants are chosen based upon their particular expertise and experience in relation to the seat for which they are applying; community and professional affiliations; views regarding the protection and management of marine or Great Lake resources; and possibly the length of residence in the area affected by the sanctuary. Applicants who are chosen as members or alternates should expect to serve two- or three-year terms, pursuant to the charter of the specific national marine sanctuary advisory council.

DATES: Applications are due by December 31, 2014.

ADDRESSES: Application kits are specific to each advisory council. As such, application kits must be obtained from and returned to the council-specific addresses noted below.

- Cordell Bank National Marine Sanctuary Advisory Council: Lilli Ferguson, Cordell Bank National Marine Sanctuary, P.O. Box 159, Olema, CA 94950; (415) 663–0314 extension 107; email *Lilli.Ferguson@noaa.gov;* or download application from *http://cordellbank.noaa.gov.*
- Hawaiian Islands Humpback Whale National Marine Sanctuary Advisory Council: Inouye Regional Center, ATTN: NOS/HIHWNMS/Emily Gaskin, 1845 Wasp Blvd., Building 176, Honolulu, HI 96818; (808) 397–2651 extension 257; email *Emily.Gaskin@noaa.gov;* or download application from *http://hawaiihumpbackwhale.noaa.gov/council/council_app_accepting.html.*
- Monitor National Marine Sanctuary Advisory Council: Shannon Ricles, Monitor National Marine Sanctuary, 100 Museum Drive, Newport News, VA 23606; (757) 591–7328; email *Shannon.Ricles@noaa.gov;* or download application from *http://monitor.noaa.gov*.
- Monterey Bay National Marine Sanctuary Advisory Council: Erin Ovalle, Monterey Bay National Marine Sanctuary, 99 Pacific Street, Building 455A, Monterey, CA 93940; (831) 647–4206; email *Erin.Ovalle@noaa.gov;* or download application from *http://montereybay.noaa.gov/welcome.html.*
- National Marine Sanctuary of American Samoa Advisory Council: Joseph Paulin, National Marine Sanctuary of American Samoa, Tauese P.F. Sunia Ocean Center, Utulei, American Samoa; (684) 633–6500; email *Joseph.Paulin@noaa.gov;* or download application from *http://americansamoa.noaa.gov.*
- Olympic Coast National Marine Sanctuary Advisory Council: Karlyn Langjahr, Olympic Coast National Marine Sanctuary, 115 East Railroad Ave., Suite 101, Port Angeles, WA 98362; (360) 457–6622 extension 31; email *Karlyn.Langjahr@noaa.gov;* or download application from *http://olympiccoast.noaa.gov/involved/sac/sac_welcome.html.*
- Stellwagen Bank National Marine Sanctuary: Elizabeth Stokes, NOS/ONMS/SBNMS, 175 Edward Foster Road, Scituate, MA 02066; (781) 545–8026 extension 201; email *Elizabeth.Stokes@noaa.gov;* or download application from *http://stellwagen.noaa.gov/.*

FOR FURTHER INFORMATION CONTACT: For further information on a particular national marine sanctuary advisory council, please contact the individual identified in the **ADDRESSES** section of this notice.

SUPPLEMENTARY INFORMATION: ONMS serves as the trustee for 14 marine protected areas encompassing more than 170,000 square miles of ocean and Great Lakes waters from the Hawaiian Islands to the Florida Keys, and from Lake Huron to American Samoa. National marine sanctuaries protect our Nation's most vital coastal and marine natural and cultural resources, and through active research, management, and public engagement, sustains healthy environments that are the foundation for thriving communities and stable economies. One of the many ways ONMS ensures public participation in the designation and management of national marine sanctuaries is through the formation of advisory councils. National marine sanctuary advisory councils are community-based advisory groups established to provide advice and recommendations to the superintendents of the national marine sanctuaries on issues including management, science, service, and stewardship; and to serve as liaisons between their constituents in the community and the sanctuary. Additional information on ONMS and its advisory councils can be found at *http://sanctuaries.noaa.gov.* Information related to the purpose, policies and operational requirements for advisory councils can be found in the charter for a particular advisory council (*http://sanctuaries.noaa.gov/management/ac/council_charters.html*) and the National Marine Sanctuary Advisory Council Implementation Handbook (*http://www.sanctuaries.noaa.gov/management/ac/acref.html*).

The following is a list of the vacant seats, including positions (i.e., primary member or alternate), for each of the advisory councils currently seeking applications for members and alternates:

Cordell Bank National Marine Sanctuary Advisory Council: Community-At-Large—Marin (alternate); Education (primary member); and Research (alternate).

Hawaiian Islands Humpback Whale National Marine Sanctuary Advisory Council: Business/Commerce (alternate); Citizen-At-Large (alternate); Conservation (alternate); Education (alternate); Lanai Island Representative (alternate); Molokai Island Representative (alternate); Ocean Recreation (alternate); Tourism (alternate); and Whale Watching (alternate).

Monitor National Marine Sanctuary Advisory Council: Education (primary member); Recreational/Commercial Fishing (primary member); and Youth (primary member).

Monterey Bay National Marine Sanctuary Advisory Council: Conservation (alternate); and Education (primary member).

National Marine Sanctuary of American Samoa Advisory Council: Community-At-Large, Swains Island (primary member).

Olympic Coast National Marine Sanctuary: Conservation (primary member); Conservation (alternate); Tourism/Economic Development (primary member); Tourism/Economic Development (alternate); Marine Industry (primary member); and Marine Industry (alternate).

Stellwagen Bank National Marine Sanctuary Advisory Council: Research (primary member); and Mobile Gear Commercial Fishing (alternate).

Authority: 16 U.S.C. Sections 1431, *et seq.*

(Federal Domestic Assistance Catalog Number 11.429 Marine Sanctuary Program)

Dated: October 27, 2014.

Daniel J. Basta,

Director, Office of National Marine Sanctuaries, National Ocean Service, National Oceanic and Atmospheric Administration.

[FR Doc. 2014–26603 Filed 11–13–14; 8:45 am]

BILLING CODE 3510–NK–P

COMMITTEE FOR PURCHASE FROM PEOPLE WHO ARE BLIND OR SEVERELY DISABLED

Procurement List; Proposed Addition

AGENCY: Committee for Purchase From People Who Are Blind or Severely Disabled.

ACTION: Proposed addition to the procurement list.

SUMMARY: The Committee is proposing to add a service to the Procurement List that will be provided by a nonprofit agency employing persons who are blind or have other severe disabilities.

Comments Must Be Received on Or Before: 12/14/2014.

ADDRESSES: Committee for Purchase From People Who Are Blind or Severely Disabled, 1401 S. Clark Street, Suite 10800, Arlington, Virginia 22202–4149.

FOR FURTHER INFORMATION OR TO SUBMIT COMMENTS CONTACT: Barry S. Lineback, Telephone: (703) 603–7740, Fax: (703) 603–0655, or email *CMTEFedReg@AbilityOne.gov.*

SUPPLEMENTARY INFORMATION: This notice is published pursuant to 41 U.S.C. 8503(a)(2) and 41 CFR 51–2.3. Its purpose is to provide interested persons an opportunity to submit comments on the proposed action.

Addition

If the Committee approves the proposed addition, the entity of the Federal Government identified in this notice will be required to procure the service listed below from the nonprofit agency employing persons who are blind or have other severe disabilities.

The following service is proposed for addition to the Procurement List for provision by the nonprofit agency listed:

Service

Service Type/Locations: Mail Management and Support Service

U.S. Navy, NAVSUP Fleet Logistics Center Norfolk, Naval Support Activity, 5450 Carlisle Pike, Building 112, Mechanicsburg, PA.

U.S. Navy, NAVSUP Fleet Logistics Center Norfolk, Naval Support Activity Compounds, 700 Robbins Avenue, Building 27D, Philadelphia, PA

NPA: NewView Oklahoma, Inc., Oklahoma City, OK

Contracting Activity: Naval Support Fleet Logistics Center, Norfolk, VA

Barry S. Lineback,

Director, Business Operations.

[FR Doc. 2014–26956 Filed 11–13–14; 8:45 am]

BILLING CODE 6353–01–P

COMMODITY FUTURES TRADING COMMISSION

Sunshine Act Meetings

TIME AND DATE: 10:00 a.m., Friday, November 21, 2014.

PLACE: Three Lafayette Centre, 1155 21st Street NW., Washington, DC, 9th Floor Commission Conference Room.

STATUS: Closed.

MATTERS TO BE CONSIDERED: Surveillance, enforcement, and examinations matters. In the event that the time, date, or location of this meeting changes, an announcement of the change, along with the new time, date, and/or place of the meeting will be posted on the Commission's Web site at *http://www.cftc.gov.*

CONTACT PERSON FOR MORE INFORMATION: Christopher Kirkpatrick, 202–418–5964.

Christopher J. Kirkpatrick,

Secretary of the Commission.

[FR Doc. 2014–27177 Filed 11–12–14; 4:15 pm]

BILLING CODE 6351–01–P

DEPARTMENT OF DEFENSE

Office of the Secretary

Notification of an Open Meeting of the National Defense University Board of Visitors (BOV); Revision

AGENCY: National Defense University, DoD.

ACTION: Notice of open meeting; revision.

SUMMARY: On October 27, 2014 (79 FR 63906), the Department of Defense published a notice announcing an open meeting of the Federal Advisory Committee meeting of the National Defense University Board of Visitors (BOV). The time of the meeting on the second day (November 18) has changed and is updated in this notice.

DATES: The meeting will be held on Monday, November 17, 2014 from 12:00 p.m. to 5:00 p.m. and will continue on Tuesday, November 18, 2014, from 8:00 a.m. to 9:45 a.m.

ADDRESSES: The Board of Visitors meeting will be held at Lincoln Hall, Building 64, Room 1105, the National Defense University, 300 5th Avenue SW., Fort McNair, Washington, DC 20319–5066.

FOR FURTHER INFORMATION CONTACT: The point of contact for this notice of open meeting is Ms. Joycelyn Stevens at (202) 685–0079, Fax (202) 685–3920 or *StevensJ7@ndu.edu.*

SUPPLEMENTARY INFORMATION: This meeting is being held under the provisions of the Federal Advisory Committee Act of 1972 (5 U.S.C. Appendix, as amended), the Government in the Sunshine Act of 1976 (5 U.S.C. 552b, as amended), and 41 CFR 102–3.150. Pursuant to 5 U.S.C. 552b and 41 CFR 102–3.140 through 102–3.165, and the availability of space, this meeting is open to the public. The future agenda will include discussion on accreditation compliance, organizational management, strategic planning, resource management, and other matters of interest to the National Defense University.

Limited space made available for observers will be allocated on a first come, first served basis. Pursuant to 41 CFR 102–3.105(j) and 102–3.140, and section 10(a)(3) of the Federal Advisory Committee Act of 1972, written statements to the committee may be submitted to the committee at any time or in response to a stated planned meeting agenda by FAX or email to the point of contact person listed in **FOR FURTHER INFORMATION CONTACT**. (Subject Line: Comment/Statement to the NDU BOV.)

Due to difficulties beyond the control of the Department of Defense, the Designated Federal Officer was unable to submit an amended **Federal Register** notice pertaining to the Board of Visitors, National Defense University's meeting agenda for its scheduled meeting of November 18, 2014, that ensured compliance with the requirements of 41 CFR 102–3.150(a). Accordingly, the Advisory Committee Management Officer for the Department of Defense, waives the 15-calendar day notification requirement pursuant to 41 CFR 102–3.150(b).

Dated: November 7, 2014.

Aaron Siegel,

Alternate OSD Federal Register Liaison Officer, Department of Defense.

[FR Doc. 2014–26939 Filed 11–13–14; 8:45 am]

BILLING CODE 5001–06–P

DEPARTMENT OF DEFENSE

Office of the Secretary

[Docket ID DoD–2014–OS–0147]

Privacy Act of 1974; System of Records

AGENCY: Office of the Inspector General (IG), DoD.

ACTION: Notice to alter a System of Records.

SUMMARY: The Office of the Inspector General is altering a system of records notice in its existing inventory of record systems subject to the Privacy Act of 1974, as amended. The system notice is entitled CIG–06, ''Investigative Files.'' This system of records is used to conduct criminal investigations, crime prevention, and criminal intelligence activities; to conduct management studies involving analysis, compilation of statistics, and quality control; and to ensure that completed investigations are legally sufficient and result in overall improvement in techniques, training and professionalism.

DATES: Comments will be accepted on or before December 15, 2014. This proposed action will be effective the day following the end of the comment period unless comments are received which result in a contrary determination.

ADDRESSES: You may submit comments, identified by docket number and title, by any of the following methods:

* Federal Rulemaking Portal: *http://www.regulations.gov.* Follow the instructions for submitting comments.

* Mail: Federal Docket Management System Office, 4800 Mark Center Drive, East Tower, 2nd Floor, Suite 02G09, Alexandria, VA 22350–3100.

Instructions: All submissions received must include the agency name and docket number for this **Federal Register** document. The general policy for comments and other submissions from members of the public is to make these submissions available for public viewing on the Internet at *http://www.regulations.gov* as they are received without change, including any personal identifiers or contact information.

FOR FURTHER INFORMATION CONTACT: Mark Dorgan, DoD IG FOIA/Privacy Office, Department of Defense, Inspector General, 4800 Mark Center Drive, Alexandria, VA 22350–1500 or telephone: (703) 699–5680.

SUPPLEMENTARY INFORMATION: The Office of the Inspector General notices for systems of records subject to the Privacy Act of 1974 (5 U.S.C. 552a), as amended, have been published in the **Federal Register** and are available from the address in **FOR FURTHER INFORMATION CONTACT** or from the Defense Privacy and Civil Liberties Web site at *http://dpclo.defense.gov/.*

The proposed systems reports, as required by 5 U.S.C. 552a(r) of the Privacy Act, as amended, were submitted on November 7, 2014, to the House Committee on Oversight and Government Reform, the Senate Committee on Homeland Security and Governmental Affairs, and the Office of Management and Budget (OMB) pursuant to paragraph 4c of Appendix I to OMB Circular No. A–130, ''Federal Agency Responsibilities for Maintaining Records About Individuals,'' dated February 8, 1996 (February 20, 1996, 61 FR 6427).

Dated: November 10, 2014.

Aaron Siegel,

Alternate OSD Federal Register Liaison Officer, Department of Defense.

CIG–06

SYSTEM NAME:

Investigative Files (October 15, 2008, 73 FR 61084)

CHANGES:

* * * * *

SYSTEM LOCATION:

Delete entry and replace with ''Primary location: Office of the Inspector General, Department of Defense, Office of the Deputy Inspector General for Investigations, Defense Criminal Investigative Service (DCIS), 4800 Mark Center Drive, Alexandria, VA 22350–1500.

Decentralized locations: Defense Criminal Investigative Service Field Offices, Resident Agencies, and Posts of Duty.''

* * * * *

CATEGORIES OF RECORDS IN THE SYSTEM:

Delete entry and replace with ''Reports of Investigations (ROIs), Information Reports (IRs) and criminal intelligence reports containing statements of witnesses, suspects, subject(s) and special agents; laboratory reports, polygraph records to include charts, reports, technical data, rights waivers, polygraph waivers, numerical score sheets, interview logs, test questions sheets, and all other documents relating to the polygraphs, all consensual or nonconsensual monitoring, documentary evidence, physical evidence, summary and administrative data pertaining to preparation and distribution of the report; basis for allegations; investigative information from Federal, State, Tribal and local investigative and intelligence agencies and departments and all correspondence relevant to the investigation, location of investigation, year and date of offense, personal identifiers such as names, date of birth, place of birth, Social Security Number (SSN), alien registration number, driver's license number, and photos of persons who have been subjects of electronic surveillance, suspects, subjects' witnesses and victims of crimes, report number which allows access to records noted above; agencies, firms, and Defense Department organizations which were the subject(s) or victim(s) of criminal investigations; and disposition and suspense of offenders listed in criminal investigative files, agents notes, working papers, confidential source documents, subpoenas, Grand Jury documents, finger print cards, requests approvals for case openings and or closings, special investigative techniques requiring approval by management.''

* * * * *

ROUTINE USES OF RECORDS MAINTAINED IN THE SYSTEM, INCLUDING CATEGORIES OF USERS AND THE PURPOSES OF SUCH USES:

Delete entry and replace with ''In addition to those disclosures generally permitted under 5 U.S.C. 552a(b) of the Privacy Act of 1974, as amended, these records or information contained therein may specifically be disclosed outside the DoD as a routine use pursuant to 5 U.S.C. 552a(b)(3) as follows:

To the U.S. Secret Service in conjunction with the protection of persons under its jurisdiction.

To other Federal, State, Tribal or local agencies having jurisdiction over the substance of the allegations or a related investigative interest in criminal law enforcement investigations including statutory violations, counter-intelligence, counter-espionage and counter-terrorist activities and other security matters.

To other Federal Inspector General offices, the President's Council on Integrity and Efficiency, and/or other Federal law enforcement agencies for the purpose of coordinating and conducting administrative inquiries and civil and criminal investigations, or when responding to such offices, Council, and agencies in connection with the investigation of potential violations of law, rule, and/or regulation.

To other Federal Inspector General offices, the President's Council on Integrity and Efficiency, and/or the Department of Justice for purposes of conducting external reviews to ensure that adequate internal safeguards and management procedures continue to exist within the Office of the Inspector General of the Department of Defense.

To State, Territorial, and District of Columbia, and Commonwealth Attorney Generals and their respective employees, statistical purposes or evidentiary documentation in connection with their agency investigation(s).

To State, Territorial, Commonwealth, County, or City law enforcement officials and their respective employees, upon a statistical purposes or evidentiary documentation in connection with their agency investigation(s).

The DoD Blanket Routine Uses set forth at the beginning of the OIG's compilation of systems of records notices may also apply to this system.''

* * * * *

STORAGE:

Delete entry and replace with ''Paper records and electronic storage media.''

* * * * *

SAFEGUARDS:

Delete entry and replace with ''The primary storage location and many decentralized locations are in buildings protected by guards during non-duty hours. The paper records are stored in locked areas. Access to electronic records is restricted to those with a need-to-know, and the user must logon to the system via Common Access Card (CAC) and password.''

* * * * *

SYSTEM MANAGER(S) AND ADDRESS:

Delete entry and replace with ''Director, Internal Operations Directorate, Defense Criminal Investigative Service, Office of the Inspector General for Investigations, Office of the Inspector General of the Department of Defense, 4800 Mark Center Drive, Alexandria, VA 22350–1500.''

NOTIFICATION PROCEDURES:

Delete entry and replace with ''Individuals seeking to determine whether information about themselves is contained in this system should address written inquiries to the Chief, Freedom of Information Act Requester Service Center/Privacy Act Office, Assistant Inspector General for Communications and Congressional Liaison, Office of the Inspector General, DoD, 4800 Mark Center Drive, Alexandria, VA 22350–1500.

For verification purposes, individuals shall provide their full name, address, any details which may assist in locating records of the individual, and their signature.

In addition, the requester must provide a notarized statement or a signed declaration made in accordance with 28 U.S.C. 1746, in the following format:

IF EXECUTED OUTSIDE THE UNITED STATES:

'I declare under penalty of perjury under the laws of the United States of America that the foregoing is true and correct. Executed on (date).' (Signature).

If executed within the United States, its territories, possessions, or commonwealths: 'I declare under penalty of perjury that the foregoing is true and correct. Executed on (date).' (Signature).''

RECORD ACCESS PROCEDURES:

Delete entry and replace with ''Individuals seeking access to information about themselves contained in this system should address written inquiries to the Chief, Freedom of Information Act Requester Service Center/Privacy Act Office, Assistant Inspector General for Communications and Congressional Liaison, Office of the Inspector General, DoD, 4800 Mark Center Drive, Alexandria, VA 22350–1500.

For verification purposes, individuals shall provide their full name, address, any details which may assist in locating records of the individual, and their signature.

In addition, the requester must provide a notarized statement or a signed declaration made in accordance with 28 U.S.C. 1746, in the following format:

IF EXECUTED OUTSIDE THE UNITED STATES:

'I declare under penalty of perjury under the laws of the United States of America that the foregoing is true and correct. Executed on (date).' (Signature).

If executed within the United States, its territories, possessions, or commonwealths: 'I declare under penalty of perjury that the foregoing is true and correct. Executed on (date).' (Signature).''

* * * * *

[FR Doc. 2014–26970 Filed 11–13–14; 8:45 am]

BILLING CODE 5001–06–P

DEPARTMENT OF DEFENSE

Department of the Air Force

U.S. Air Force Academy Board of Visitors Notice of Meeting

AGENCY: U.S. Air Force Academy Board of Visitors, DOD.

ACTION: Meeting Notice.

SUMMARY: In accordance with 10 U.S.C. Section 9355, the U.S. Air Force Academy (USAFA) Board of Visitors (BoV) will hold a meeting at the Longworth House Office Building, Room 1310, Washington, DC on December 3, 2014. The meeting will begin at 9:30 a.m. The meeting is scheduled to close to the public at 3:00 p.m. The purpose of this meeting is to review morale and discipline, social climate, curriculum, instruction, infrastructure, fiscal affairs, academic methods, and other matters relating to the Academy. Specific topics for this meeting include a Superintendent's Update; USAFA Budget Update; USAFA Master Plan (Infrastructure) Update; USAFA Diversity Panel Subcommittee Out-brief; and an USAFA Climate Survey Results Briefing. In accordance with 5 U.S.C. Section 552b, as amended, and 41 CFR Section 102–3.155, one session of this meeting shall be closed to the public because it involves matters covered by subsection (c)(6) of 5 U.S.C. Section 552b. Public attendance at the open portions of this USAFA BoV meeting shall be accommodated on a first-come, first-served basis up to the reasonable and safe capacity of the meeting room. In addition, any member of the public wishing to provide input to the USAFA BoV should submit a written statement in accordance with 41 CFR Section 102–3.140(c) and section 10(a)(3) of the Federal Advisory Committee Act and the procedures described in this paragraph. Written statements must address the following details: the issue, discussion, and a recommended course of action.

Supporting documentation may also be included as needed to establish the appropriate historical context and provide any necessary background information. Written statements can be submitted to the Designated Federal Officer (DFO) at the Air Force address detailed below at any time. However, if a written statement is not received at least 10 calendar days before the first day of the meeting which is the subject of this notice, then it may not be provided to or considered by the BoV until its next open meeting. The DFO will review all timely submissions with the BoV Chairman and ensure they are provided to members of the BoV before the meeting that is the subject of this notice. If after review of timely submitted written comments and the BoV Chairman and DFO deem appropriate, they may choose to invite the submitter of the written comments to orally present the issue during an open portion of the BoV meeting that is the subject of this notice. Members of the BoV may also petition the Chairman to allow specific personnel to make oral presentations before the BoV. In accordance with 41 CFR Section 102–3.140(d), any oral presentations before the BoV shall be in accordance with agency guidelines provided pursuant to a written invitation and this paragraph. Direct questioning of BoV members or meeting participants by the public is not permitted except with the approval of the DFO and Chairman. For the benefit of the public, rosters that list the names of BoV members and any releasable materials presented during the open portions of this BoV meeting shall be made available upon request.

FOR FURTHER INFORMATION CONTACT: For additional information or to attend this BoV meeting, contact Maj Mark Cipolla, Accessions and Training Division, AF/A1PT, 1040 Air Force Pentagon, Washington, DC 20330, (703) 695–4066, *mark.cipolla@us.af.mil.*

Henry Williams,

Civ, DAF, Acting Air Force Federal Register Liaison Officer.

[FR Doc. 2014–26952 Filed 11–13–14; 8:45 am]

BILLING CODE 5001–10–P

DEPARTMENT OF DEFENSE

Department of the Army

Finding of No Significant Impact and Final Supplemental Programmatic Environmental Assessment for Army 2020 Force Structure Realignment

AGENCY: Department of the Army, DoD.

ACTION: Notice of availability.

SUMMARY: The Department of the Army announces the availability of the Finding of No Significant Impact (FNSI) for implementation of force structure realignment to reduce the Army active duty end-strength from 562,000 at the end of Fiscal Year (FY) 2012 to 420,000 by FY 2020. The Supplemental Programmatic Environmental Assessment for Army 2020 Force Structure Realignment (SPEA) supplements the 2013 Programmatic Environmental Assessment (PEA). After reviewing the SPEA and comments received during the public review period, the Deputy Chief of Staff of the Army, G–3/5/7 has signed the FNSI that concluded there will be no significant environmental impacts, other than socioeconomic impacts, likely to result from the implementation of the Proposed Action under the alternative analyzed. Although there could be significant socioeconomic impacts, these alone do not require the preparation of an Environmental Impact Statement; therefore, one will not be prepared.

Force restructure decisions reducing the Army active duty end-strength from 562,000 to 490,000 were supported by the 2013 PEA. The SPEA builds on the foundation of the 2013 PEA and assesses the impacts of a potential reduction of an additional 70,000 Soldiers and associated Army civilian employees (Army employees), from the end-strength of 490,000 Soldiers analyzed in the 2013 PEA to an active component end-strength of 420,000.

The information in the SPEA will be used to support a series of decisions in the coming years regarding how the force is to be further realigned.

An electronic version of the FNSI and SPEA is available for download at: *http://aec.army.mil/Services/Support/NEPA/Documents.aspx.*

FOR FURTHER INFORMATION CONTACT: U.S. Army Environmental Command, Public Affairs Office, 2450 Connell Road (Building 2264), Joint Base San Antonio-Fort Sam Houston, TX 78234–7664 or email to *usarmy.jbsa.aec.nepa@mail.mil.*

SUPPLEMENTARY INFORMATION: Both the 2013 PEA and 2014 SPEA analyzed potential reductions at Fort Benning, GA; Fort Bliss, TX; Fort Bragg, NC; Fort Campbell, KY; Fort Carson, CO; Fort Drum, NY; Fort Gordon, GA; Fort Hood, TX; Fort Irwin, CA; Fort Knox, KY; Fort Lee, VA; Fort Leonard Wood, MO; Fort Polk, LA; Fort Riley, KS; Fort Sill, OK; Fort Stewart, GA; Fort Wainwright, AK; Joint Base Elmendorf-Richardson, AK; Joint Base Langley-Eustis, VA; Joint Base Lewis-McChord, WA; and, United States Army Garrison (USAG) Hawaii—Schofield Barracks, HI. The SPEA also analyzed potential reductions at Aberdeen Proving Ground, MD; Fort Belvoir, VA; Fort Huachuca, AZ; Fort Jackson, SC; Fort Leavenworth, KS; Fort Meade, MD; Fort Rucker, AL; Joint Base San Antonio—Fort Sam Houston, TX; and USAG Hawaii—Fort Shafter, HI.

The SPEA provides an assessment of the possible direct, indirect, and cumulative environmental and socioeconomic impacts of the greatest Army employee reductions being considered at each installation. The SPEA does not identify any significant environmental impacts as a result of implementing the proposed action, with the exception of socioeconomic impacts at most installations; consequently, the preparation of an environmental impact statement is not required. Socioeconomic impacts are of particular concern to the Army because they affect communities around military installations. Therefore, the SPEA has a comprehensive analysis of the socioeconomic impacts to inform decision-makers and communities.

Brenda S. Bowen,

Army Federal Register Liaison Officer.

[FR Doc. 2014–26724 Filed 11–13–14; 8:45 am]

BILLING CODE 3710–08–P

DEPARTMENT OF DEFENSE

Department of the Navy

[Docket ID: USN–2014–0023]

Privacy Act of 1974; System of Records

AGENCY: Department of the Navy, DoD.

ACTION: Notice to alter a System of Records.

SUMMARY: The Department of the Navy proposes to alter the system of records, N06150–5, entitled ''Millennium Cohort Study'' in its inventory of record systems subject to the Privacy Act of 1974, as amended. This system will create a probability-based database of service members and veterans who have, or have not, deployed overseas so that various longitudinal health and research studies may be conducted over a 67-year period. The database will be used:

a. To systematically collect population-based demographic and health data to evaluate the health of Armed Forces personnel throughout their careers and after leaving the service.

b. To evaluate the impact of operational deployments on various

measures of health over time including medically unexplained symptoms and chronic diseases to include cancer, heart disease and diabetes.

c. To serve as a foundation upon which other routinely captured medical and deployment data may be added to answer future questions regarding the health risks of operational deployment, occupations, and general service in the Armed Forces.

d. To examine characteristics of service in the Armed Forces associated with common clinician-diagnosed diseases and with scores on several standardized self-reported health inventories for physical and psychological functional status.

e. To provide a data repository and available representative Armed Forces cohort that future investigators and policy makers might use to study important aspects of service in the Armed Forces including disease outcomes among an Armed Forces cohort. In addition to revealing changes in veterans' health status over time, the Millennium Cohort Study will serve as a data repository, providing a solid foundation upon which additional epidemiological studies may be constructed.

f. To access the associations of military service on the health and well-being of military families, and to compare the adjusted probabilities of new onset diseases and conditions among military spouses.''

DATES: Comments will be accepted on or before December 15, 2014. This proposed action will be effective the day following the end of the comment period unless comments are received which result in a contrary determination.

ADDRESSES: You may submit comments, identified by docket number and title, by any of the following methods:

* Federal Rulemaking Portal: *http://www.regulations.gov.* Follow the instructions for submitting comments.

* Mail: Federal Docket Management System Office, 4800 Mark Center Drive, East Tower, 2nd Floor, Suite 02G09, Alexandria, VA 22350–3100.

Instructions: All submissions received must include the agency name and docket number for this **Federal Register** document. The general policy for comments and other submissions from members of the public is to make these submissions available for public viewing on the Internet at *http://www.regulations.gov* as they are received without change, including any personal identifiers or contact information.

FOR FURTHER INFORMATION CONTACT: Ms. Robin Patterson, Head, PA/FOIA Office (DNS–36), Department of the Navy, 2000 Navy Pentagon, Washington, DC 20350–2000, or by phone at (202) 685–6545.

SUPPLEMENTARY INFORMATION: The Department of the Navy's notices for systems of records subject to the Privacy Act of 1974 (5 U.S.C. 552a), as amended, have been published in the **Federal Register** and are available from the address in **FOR FURTHER INFORMATION CONTACT** or from the Defense Privacy and Civil Liberties Office Web site at *http://dpclo.defense.gov/.*

The proposed system report, as required by 5 U.S.C. 552a(r) of the Privacy Act of 1974, as amended, was submitted on October 22, 2014, to the House Committee on Oversight and Government Reform, the Senate Committee on Governmental Affairs, and the Office of Management and Budget (OMB) pursuant to paragraph 4c of Appendix I to OMB Circular No. A–130, ''Federal Agency Responsibilities for Maintaining Records About Individuals,'' dated February 8, 1996 (February 20, 1996, 61 FR 6427).

Dated: November 7, 2014.

Aaron Siegel,

Alternate OSD Federal Register Liaison Officer, Department of Defense.

N06150–5

SYSTEM NAME:

Millennium Cohort Study (June 16, 2003, 68 FR 35657).

CHANGES:

SYSTEM IDENTIFIER:

Delete entry and replace with ''N06500–1.''

* * * * *

SYSTEM LOCATION:

Delete entry and replace with ''Naval Health Research Center, Deployment Health Research, Department 164, 140 Sylvester Road, San Diego, CA 92106–3521.''

CATEGORIES OF INDIVIDUALS COVERED BY THE SYSTEM:

Delete entry and replace with ''An initial probability-based, cross-sectional sample of U.S. Armed Forces personnel (active duty Army, Navy, Marine Corps, Coast Guard, Air Force, and Reserve/National Guard, and veterans), as of October 2000, that will be followed prospectively by postal or web surveys every 3 years over at least a 67-year period. The initial sample was comprised of 77,047 service members including individuals who have been deployed to Southwest Asia, Bosnia, or Kosovo since August 1997. In October 2004 and October 2007, samples of 31,110 and 43,440, respectively, of new Armed Forces personnel were added to the Cohort. In May 2011, a random sample of approximately 50,000 new Armed Forces personnel was added to the Cohort. The individuals will be followed until at least the year 2068, even if they retire or separate. The Millennium Cohort Study will also evaluate families of service members by adding a spouse assessment component to the Cohort, called the Millennium Cohort Family Study, where spouses complete a survey about themselves and their children. Beginning in May 2011, a sample of approximately 10,000 spouses of Armed Forces personnel were added to the Family Cohort and will be followed until at least 2022.''

CATEGORIES OF RECORDS IN THE SYSTEM:

Delete entry and replace with ''Demographic data: Name, last four of Social Security Number (SSN), subject identification number, rank, grade, gender, military occupational specialty; health data: self-reported medical conditions and symptoms, smoking and drinking behaviors wellness, life experiences, and relationship with family. Validated instruments are incorporated to capture self-assessed physical and mental functional status (Short Form-36 Veterans), psychosocial assessment (Patient Health Questionnaire), and post-traumatic stress disorder (Patient Checklist-17). These records include all data elements previously mentioned.

Information obtained from the survey responses will be supplemented with deployment, occupational, vaccination, and healthcare utilization data related to individual health status.''

AUTHORITY FOR MAINTENANCE OF THE SYSTEM:

Delete entry and replace with ''5 U.S.C. 301, Departmental Regulations; 10 U.S.C. 5031, Office of the Chief of Naval Operations: Function, composition; 10 U.S.C. 5032, Office of the Chief of Naval Operations: general duties; DoDD 5124.02, Under Secretary of Defense for Personnel and Readiness (USD(P&R)); 10 U.S.C. 136, Under Secretary of Defense for Personnel and Readiness (USD(P&R)); OPNAVINST 5300.8C, Coordination and Control of Personnel Surveys; DoD 6025.18–R, DoD Health Information Privacy Regulation; and E.O. 9397 (SSN), as amended.''

PURPOSE(S):

Delete entry and replace with ''To create a probability-based database of service members and veterans who

have, or have not, deployed overseas so that various longitudinal health and research studies may be conducted over a 67-year period. The database will be used:

a. To systematically collect population-based demographic and health data to evaluate the health of Armed Forces personnel throughout their careers and after leaving the service.

b. To evaluate the impact of operational deployments on various measures of health over time including medically unexplained symptoms and chronic diseases to include cancer, heart disease and diabetes.

c. To serve as a foundation upon which other routinely captured medical and deployment data may be added to answer future questions regarding the health risks of operational deployment, occupations, and general service in the Armed Forces.

d. To examine characteristics of service in the Armed Forces associated with common clinician-diagnosed diseases and with scores on several standardized self-reported health inventories for physical and psychological functional status.

e. To provide a data repository and available representative Armed Forces cohort that future investigators and policy makers might use to study important aspects of service in the Armed Forces including disease outcomes among an Armed Forces cohort.

In addition to revealing changes in veterans' health status over time, the Millennium Cohort Study will serve as a data repository, providing a solid foundation upon which additional epidemiological studies may be constructed.

f. To access the associations of military service on the health and well-being of military families, and to compare the adjusted probabilities of new onset diseases and conditions among military spouses.''

* * * * *

STORAGE:

Delete entry and replace with ''Paper and electronic storage media.''

RETRIEVABILITY:

Delete entry and replace with ''Records are retrieved by individual's name and/or randomly generated subject identification number.''

SAFEGUARDS:

Delete entry and replace with ''Access to areas where records are maintained is limited to authorized personnel. Access control devices protect areas during working hours and intrusion alarm devices during non-duty hours. Access to data is provided on a need-to-know basis only. Paper records are kept in locked file cabinets. Data is stored on a secure server. All supplied sensitive information is transmitted via encrypted Secure Sockets Layer (SSL) technology. Randomly generated subject identification numbers are used as the primary identifier instead of the individual's names. Electronic records can only be accessed by authorized personnel with Common Access Cards (CAC) in conjunction with a personal identification number.''

RETENTION AND DISPOSAL:

Delete entry and replace with ''Electronic records and signed original paper consent forms are permanent and transferred to the nearest Federal Records Center (FRC) when 5 years old and then transferred to NARA when 20 years old. Temporary supporting records (to include paper records) are transferred to the nearest FRC when 5 years old and destroyed when 10 years old. Temporary non-record files (to include paper records or to include paper copies of the surveys) will be destroyed when 5 years old or on completion/termination of project.''

SYSTEM MANAGER(S) AND ADDRESS:

Delete entry and replace with ''Policy Official: Commanding Officer, Naval Health Research Center, 140 Sylvester Rd, San Diego, CA 92106–3521.

Record Holder: Senior Investigator, The Millennium Cohort Study, Naval Health Research Center, Deployment Health Research Department, 140 Sylvester Rd, San Diego, CA 92106–3521.''

NOTIFICATION PROCEDURE:

Delete entry and replace with ''Individuals seeking to determine whether information about themselves is contained in this system should address written inquiries to the Senior Investigator, The Millennium Cohort Study, Naval Health Research Center, Deployment Health Research Department, 140 Sylvester Rd, San Diego, CA 92106–3521.

The request should contain the individual's name and last four of SSN, subject identification number (if known) and must be signed by the individual requesting the information.

The system manager may require an original signature or a notarized signature as a means of proving the identity of the individual.''

RECORD ACCESS PROCEDURES:

Delete entry and replace with ''Individuals seeking access to information about themselves contained in this system should address written inquiries to the Senior Investigator, The Millennium Cohort Study, Naval Health Research Center, Deployment Health Research Department, 140 Sylvester Rd, San Diego, CA 92106–3521.

The request should contain the individual's name and last four of SSN, subject identification number (if known) and must be signed by the individual requesting the information.

The system manager may require an original signature or a notarized signature as a means of proving the identity of the individual requesting access to the records.''

* * * * *

RECORD SOURCE CATEGORIES:

Delete entry and replace with ''Individual participant survey instruments; Composite Health Care System (CHCS); Corporate Executive Information Systems; Defense Manpower Data Center (DMDC); Defense Enrollment Eligibility Reporting System (DEERS); Civilian Health and Medical Program of the Uniformed Services; MHS Data Repository (MDR); Armed Forces Health Longitudinal Technology Application (AHLTA); Armed Forces Medical Examiner System (AFMES); National Data Index (NDI); Army Medical Surveillance Activity (AMSA); Joint Theater Trauma Registry (JTTR); Department of Veterans Affairs Computerized Patient Record System (CPRS); survey research instruments and health research records at Naval Medical Center, San Diego; and individual physical exams and biological specimens.''

* * * * *

[FR Doc. 2014–26930 Filed 11–13–14; 8:45 am]

BILLING CODE 5001–06–P

DEPARTMENT OF EDUCATION

President's Advisory Commission on Asian Americans and Pacific Islanders

AGENCY: President's Advisory Commission on Asian Americans and Pacific Islanders, U.S. Department of Education.

ACTION: Announcement of an Open Meeting.

SUMMARY: This notice sets forth the schedule and agenda of the meeting of the President's Advisory Commission on Asian Americans and Pacific Islanders (Commission). The notice also describes the functions of the Commission. Notice of the meeting is required by § 10(a)(2) of the Federal Advisory Committee Act and is

intended to notify the public of its opportunity to attend.

DATES: The AAPI Commission meeting will be held on

December 3, 2014 from 9:00–5:00 p.m. PT

December 4, 2014 from 9:00–5:00 p.m. PT

December 5, 2014 from 9:00–3:00 p.m. PT

ADDRESSES: Environmental Protection Agency, Conference Room Suite, Room 21DNSU, 1200 6th Avenue, Seattle, WA 98101.

FOR FURTHER INFORMATION CONTACT: Bessie Chan, White House Initiative on Asian Americans and Pacific Islanders, Potomac Center Plaza, 550 12th Street SW., Washington, DC 20202; telephone: 202–245–6418, fax: 202–245–7166.

SUPPLEMENTARY INFORMATION:

The AAPI Commission's Statutory Authority and Function: The President's Advisory Commission on Asian Americans and Pacific Islanders is established under Executive Order 13515, dated October 14, 2009 and subsequently continued and amended by Executive Order 13585 and Executive Order 13652. The Commission is governed by the provisions of the Federal Advisory Committee Act (FACA), (P.L 92–463; as amended, 5 U.S.C.A. app.) which sets forth standards for the formation and use of advisory committees. According to Executive Order 13515, the Commission shall provide advice to the President, through the Secretary of Education and a senior official to be designated by the President, on: (i) The development, monitoring, and coordination of executive branch efforts to improve the quality of life of Asian Americans and Pacific Islanders (AAPIs) through increased participation in Federal programs in which such persons may be underserved; (ii) the compilation of research and data related to AAPI populations and subpopulations; (iii) the development, monitoring, and coordination of Federal efforts to improve the economic and community development of AAPI businesses; and (iv) strategies to increase public and private-sector collaboration, and community involvement in improving the health, education, environment, and well-being of AAPIs.

Members of the public who would like to attend the meetings on December 3, 2014, December 4, 2014, and December 5, 2014 should R.S.V.P. to Bessie Chan via email at *Bessie.Chan@ed.gov* no later than November 19, 2014 at 3:00 p.m. ET.

Submission of Written Comments: Due to time constraints, there will not be a public comment period at these meetings. However, individuals wishing to provide comments to the White House Initiative on Asian Americans and Pacific Islanders, the Commission, or the Regional Interagency Working Group may contact Bessie Chan via email at *Bessie.Chan@ed.gov.* Please include in the subject line the wording, ''Public Comment.''

Meeting Agenda

The purpose of this meeting is to discuss current and future endeavors of the White House Initiative on Asian Americans and Pacific Islanders and key issues and concerns impacting the AAPI community; review the work of the White House Initiative on Asian Americans and Pacific Islanders; determine key strategies to help meet the Commission's charge as outlined in Executive Order 13515; determine regional engagement strategies and deliverables with the Regional Interagency Working Group; and plan collaborative events and activities with the Regional Interagency Working Group.

Access to Records of the Meeting: The Department will post the official report of the meeting on the AAPI Commission Web site not later than 90 days after the meeting. Pursuant to the FACA, the public may also inspect the materials at 550 12th Street SW., Washington, DC 20202 by emailing *Bessie.Chan@ed.gov* or by calling (202) 245–6418 to schedule an appointment.

Reasonable Accommodations: The meeting site is accessible to individuals with disabilities. Individuals who will need accommodations for a disability in order to attend the meetings (*e.g.*, interpreting services, assistive listening devices, or material in alternative format) should notify Bessie Chan at 202–245–6418, no later than November 19, 2014. We will attempt to meet requests for accommodations after this date, but cannot guarantee their availability.

Authority: Executive Order No. 13515, as amended by Executive Orders 13585 and 13652.

Ted Mitchell,

Under Secretary, U.S. Department of Education.

[FR Doc. 2014–26940 Filed 11–13–14; 8:45 am]

BILLING CODE P

DEPARTMENT OF ENERGY

Federal Energy Regulatory Commission

[Docket No. CP15–7–000]

Dominion Transmission, Inc.; Notice of Application

Take notice that on October 22, 2014, Dominion Transmission, Inc. (DTI), 120 Tredegar Street, Richmond, Virginia 23219, filed in Docket No. CP15–7–000, an application pursuant to section 7(c) of the Natural Gas Act and Part 157 of the Commission's regulations, for a certificate of public convenience and necessity to construct and operate its Monroe to Cornwell Project. The project consists of; (i) 12,552 of horsepower (hp) at its L.L. Tonkin Station in Doddridge County, West Virginia; (ii) additional gas coolers at its Mockingbird Compressor Station in Wetzel County, West Virginia; and (iii) measurement and regulation facilities and compressor unit modifications at its Cornwell Compressor Station in Kanawha County, West Virginia. The project is designed to provide up to 205,000 dekatherms per day of incremental firm transportation service on DTI's system. DTI proposes an initial incremental rate to recover the approximately $66,383,675 cost of the Project, all as more fully set forth in the application, which is on file with the Commission and open to public inspection. The filing may also be viewed on the web at *http://www.ferc.gov* using the ''eLibrary'' link. Enter the docket number excluding the last three digits in the docket number field to access the document. For assistance, contact FERC at *FERCOnlineSupport@ferc.gov* or call toll-free, (866) 208–3676 or TTY, (202) 502–8659.

Any questions regarding this application should be directed to Richard D. Jessee, Gas Transmission Regulatory and Certificates Analyst III, Dominion Transmission, Inc., 701 East Cary Street, Richmond, Virginia 23219, phone: (804) 771–3704, fax: (804) 771–4804, or email: *richard.jessee@dom.com.*

Pursuant to section 157.9 of the Commission's rules, 18 CFR 157.9, within 90 days of this Notice the Commission staff will either: Complete its environmental assessment (EA) and place it into the Commission's public record (eLibrary) for this proceeding; or issue a Notice of Schedule for Environmental Review. If a Notice of Schedule for Environmental Review is issued, it will indicate, among other milestones, the anticipated date for the Commission staff's issuance of the final

environmental impact statement (FEIS) or EA for this proposal. The filing of the EA in the Commission's public record for this proceeding or the issuance of a Notice of Schedule for Environmental Review will serve to notify federal and state agencies of the timing for the completion of all necessary reviews, and the subsequent need to complete all federal authorizations within 90 days of the date of issuance of the Commission staff's FEIS or EA.

There are two ways to become involved in the Commission's review of this project. First, any person wishing to obtain legal status by becoming a party to the proceedings for this project should, on or before the comment date stated below, file with the Federal Energy Regulatory Commission, 888 First Street NE., Washington, DC 20426, a motion to intervene in accordance with the requirements of the Commission's Rules of Practice and Procedure (18 CFR 385.214 or 385.211) and the Regulations under the NGA (18 CFR 157.10). A person obtaining party status will be placed on the service list maintained by the Secretary of the Commission and will receive copies of all documents filed by the applicant and by all other parties. A party must submit 7 copies of filings made with the Commission and must mail a copy to the applicant and to every other party in the proceeding. Only parties to the proceeding can ask for court review of Commission orders in the proceeding.

However, a person does not have to intervene in order to have comments considered. The second way to participate is by filing with the Secretary of the Commission, as soon as possible, an original and two copies of comments in support of or in opposition to this project. The Commission will consider these comments in determining the appropriate action to be taken, but the filing of a comment alone will not serve to make the filer a party to the proceeding. The Commission's rules require that persons filing comments in opposition to the project provide copies of their protests only to the party or parties directly involved in the protest.

Persons who wish to comment only on the environmental review of this project should submit an original and two copies of their comments to the Secretary of the Commission. Environmental commentors will be placed on the Commission's environmental mailing list, will receive copies of the environmental documents, and will be notified of meetings associated with the Commission's environmental review process. Environmental commentors will not be required to serve copies of filed documents on all other parties. However, the non-party commentors will not receive copies of all documents filed by other parties or issued by the Commission (except for the mailing of environmental documents issued by the Commission) and will not have the right to seek court review of the Commission's final order.

The Commission strongly encourages electronic filings of comments, protests and interventions in lieu of paper using the ''eFiling'' link at *http://www.ferc.gov.* Persons unable to file electronically should submit an original and 5 copies of the protest or intervention to the Federal Energy Regulatory Commission, 888 First Street NE., Washington, DC 20426.

There is an ''eSubscription'' link on the Web site that enables subscribers to receive email notification when a document is added to a subscribed docket(s). For assistance with any FERC Online service, please email *FERCOnlineSupport@ferc.gov,* or call (866) 208–3676 (toll free). For TTY, call (202) 502–8659.

Comment Date: 5:00 p.m. Eastern Time on November 25, 2014.

Dated: November 4, 2014.

Kimberly D. Bose,

Secretary.

[FR Doc. 2014–26963 Filed 11–13–14; 8:45 am]

BILLING CODE 6717–01–P

DEPARTMENT OF ENERGY

Federal Energy Regulatory Commission

Combined Notice of Filings #1

Take notice that the Commission received the following electric corporate filings:

Docket Numbers: EC15–22–000.
Applicants: Mesquite Power, LLC.
Description: Mesquite Power, LLC Section 203 Application and Request for Expedited Action.
Filed Date: 11/5/14.
Accession Number: 20141105–5172.
Comments Due: 5 p.m. ET 11/26/14.

Take notice that the Commission received the following electric rate filings:

Docket Numbers: ER10–2563–003.
Applicants: Wisconsin Electric Power Company.
Description: Wisconsin Electric Power Company submits a notice of non-material change in status regarding the joint venture and potential acquisition of interest in generation facilities.
Filed Date: 11/4/14.
Accession Number: 20141104–5205.
Comments Due: 5 p.m. ET 11/25/14.

Docket Numbers: ER10–2670–008*; ER14–2295–000; ER14–1699–001; ER14–1219–001; ER11–2424–012; ER10–3319–013; ER10–2678–007; ER10–2677–008; ER10–2674–008; ER10–2669–008; ER10–2636–009; ER10–2629–010; ER10–2627–009; ER10–2253–010; ER10–1975–014; ER10–1974–014; ER10–1550–009; ER10–1547–008; ER10–1546–010.*
Applicants: ANP Blackstone Energy Company, LLC, ANP Bellingham Energy Company, LLC, Armstrong Power, LLC, Astoria Energy LLC, Astoria Energy II LLC, Calumet Energy Team, LLC, FirstLight Hydro Generating Company, FirstLight Power Resources Management, LLC, GDF SUEZ Energy Marketing NA, Inc., Hopewell Cogeneration Ltd Partnership, Milford Power, LLC, Mt. Tom Generating Company, LLC, Northeastern Power Company, North Jersey Energy Associates, a L.P., Pinetree Power-Tamworth, Inc., Troy Energy, LLC, Northeast Energy Associates, A Limited Partnership, Pleasants Energy, LLC, Waterbury Generation LLC.
Description: Supplement to June 2014 Triennial Filing for the GDF SUEZ Northeast MBR Sellers.
Filed Date: 11/4/14.
Accession Number: 20141104–5203.
Comments Due: 5 p.m. ET 11/25/14.

Docket Numbers: ER13–104–004.
Applicants: Florida Power & Light Company.
Description: Compliance filing per 35: FPL Order No. 1000 Further Regional Compliance Filings to be effective 1/1/2015.
Filed Date: 11/4/14.
Accession Number: 20141104–5193.
Comments Due: 5 p.m. ET 11/25/14.

Docket Numbers: ER14–1578–003.
Applicants: PacifiCorp.
Description: Compliance filing per 35: OATT EIM Compliance Filing? Unauthorized Use to be effective 11/1/2014.
Filed Date: 11/5/14.
Accession Number: 20141105–5116.
Comments Due: 5 p.m. ET 11/26/14.

Docket Numbers: ER15–323–000.
Applicants: Southern California Edison Company.
Description: § 205(d) rate filing per 35.13(a)(2)(iii): Amended GIA and Distribution Service Agmt with Kona Solar—Terra Francesco 1 to be effective 11/4/2014.
Filed Date: 11/4/14.
Accession Number: 20141104–5191.
Comments Due: 5 p.m. ET 11/25/14.

Docket Numbers: ER15–331–000.
Applicants: NorthWestern Corporation.

Description: Initial rate filing per 35.12 SA 730—Letter Agreement with WAPA–UGP re Line Clearance Project to be effective 11/6/2014.
Filed Date: 11/5/14.
Accession Number: 20141105–5023.
Comments Due: 5 p.m. ET 11/26/14.

Docket Numbers: ER15–332–000.
Applicants: The Connecticut Light and Power Company.
Description: Tariff Withdrawal per 35.15: Cancellation of Amended GenConn Localized Costs Responsibility Agreement to be effective 10/1/2014.
Filed Date: 11/5/14.
Accession Number: 20141105–5035.
Comments Due: 5 p.m. ET 11/26/14.

Docket Numbers: ER15–333–000.
Applicants: The Connecticut Light and Power Company.
Description: Tariff Withdrawal per 35.15: Cancellation of PSEG New Haven Localized Costs Responsibility Agreement to be effective 10/1/2014.
Filed Date: 11/5/14.
Accession Number: 20141105–5036.
Comments Due: 5 p.m. ET 11/26/14.

Docket Numbers: ER15–334–000.
Applicants: The Connecticut Light and Power Company.
Description: Tariff Withdrawal per 35.15: Cancellation of Town of Wallingford Localized Costs Responsibility Agreement to be effective 10/1/2014.
Filed Date: 11/5/14.
Accession Number: 20141105–5037.
Comments Due: 5 p.m. ET 11/26/14.

Docket Numbers: ER15–335–000.
Applicants: Vision Power Systems, Inc.
Description: Vision Power Systems, Inc submits notice of cancellation of its market based rate tariff, effective 10/24/14.
Filed Date: 11/3/14.
Accession Number: 20141105–0001.
Comments Due: 5 p.m. ET 11/24/14.

Docket Numbers: ER15–336–000.
Applicants: The Connecticut Light and Power Company.
Description: Tariff Withdrawal per 35.15: Cancellation of Localized Costs Responsibility Agreement CTMEEC to be effective 10/1/2014.
Filed Date: 11/5/14.
Accession Number: 20141105–5040.
Comments Due: 5 p.m. ET 11/26/14.

Docket Numbers: ER15–337–000.
Applicants: The Connecticut Light and Power Company.
Description: Tariff Withdrawal per 35.15: Cancellation of Bridgeport Energy Localized Costs Responsibility Agreement to be effective 10/1/2014.
Filed Date: 11/5/14.
Accession Number: 20141105–5044.
Comments Due: 5 p.m. ET 11/26/14.

Docket Numbers: ER15–338–000.
Applicants: Public Service Company of New Hampshire.
Description: Tariff Withdrawal per 35.15: Cancellation of GenConn Energy Localized Costs Responsibility Agreement to be effective 10/1/2014.
Filed Date: 11/5/14.
Accession Number: 20141105–5050.
Comments Due: 5 p.m. ET 11/26/14.

Docket Numbers: ER15–339–000.
Applicants: Public Service Company of New Hampshire.
Description: Tariff Withdrawal per 35.15: Cancellation of PSEG New Haven Localized Costs Responsibility Agreement to be effective 10/1/2014.
Filed Date: 11/5/14.
Accession Number: 20141105–5052.
Comments Due: 5 p.m. ET 11/26/14.

Docket Numbers: ER15–340–000.
Applicants: Public Service Company of New Hampshire.
Description: Tariff Withdrawal per 35.15: Cancellation of Amended CTMEEC Localized Costs Responsibility Agreement to be effective 10/1/2014.
Filed Date: 11/5/14.
Accession Number: 20141105–5070.
Comments Due: 5 p.m. ET 11/26/14.

Docket Numbers: ER15–341–000.
Applicants: Western Massachusetts Electric Company.
Description: Tariff Withdrawal per 35.15: Cancellation of Amended GenConn Energy Localized Costs Responsibility Agreement to be effective 10/1/2014.
Filed Date: 11/5/14.
Accession Number: 20141105–5072.
Comments Due: 5 p.m. ET 11/26/14.

Docket Numbers: ER15–342–000.
Applicants: Western Massachusetts Electric Company.
Description: Tariff Withdrawal per 35.15: Cancellation of PSEG New Haven Localized Costs Responsibility Agreement to be effective 10/1/2014.
Filed Date: 11/5/14.
Accession Number: 20141105–5081.
Comments Due: 5 p.m. ET 11/26/14.

Docket Numbers: ER15–343–000.
Applicants: PJM Interconnection, L.L.C.
Description: § 205(d) rate filing per 35.13(a)(2)(iii): Original SA No. 4011; Queue Z2–027 (ISA) and Cancellation of SA No. 3802 to be effective 10/10/2014.
Filed Date: 11/5/14.
Accession Number: 20141105–5087.
Comments Due: 5 p.m. ET 11/26/14.

Docket Numbers: ER15–344–000.
Applicants: Western Massachusetts Electric Company.
Description: Tariff Withdrawal per 35.15: Cancellation of Amended CTMEEC Localized Costs Responsibility Agreement to be effective 10/1/2014.
Filed Date: 11/5/14.
Accession Number: 20141105–5090.
Comments Due: 5 p.m. ET 11/26/14.

Docket Numbers: ER15–345–000.
Applicants: Duke Energy Progress, Inc.
Description: § 205(d) rate filing per 35.13(a)(2)(iii): PWCF 2nd Amended RS No. 184 to be effective 1/1/2013.
Filed Date: 11/5/14.
Accession Number: 20141105–5108.
Comments Due: 5 p.m. ET 11/26/14.

Docket Numbers: ER15–346–000.
Applicants: Midcontinent Independent System Operator.
Description: § 205(d) rate filing per 35.13(a)(2)(iii): 2014–11–05_SA 6502 Illinois Power-Edwards SSR Agreement August 2014 Revision to be effective 8/8/2014.
Filed Date: 11/5/14.
Accession Number: 20141105–5118.
Comments Due: 5 p.m. ET 11/26/14.

Docket Numbers: ER15–347–000.
Applicants: Northeast Utilities Service Company.
Description: Northeast Utilities Service Company submits Notice of Cancellation of Localized Costs Responsibility Agreements on behalf of The Connecticut Light and Power Company, et. al.
Filed Date: 11/5/14.
Accession Number: 20141105–5132.
Comments Due: 5 p.m. ET 11/26/14.

Docket Numbers: ER15–348–000.
Applicants: Black Hills/Colorado Electric Utility Co.
Description: Baseline eTariff Filing per 35.1: Joint Dispatch Agreement Concurrence Filing to be effective 1/1/2015.
Filed Date: 11/5/14.
Accession Number: 20141105–5183.
Comments Due: 5 p.m. ET 11/26/14.

Take notice that the Commission received the following electric reliability filings:

Docket Numbers: RR15–2–000.
Applicants: North American Electric Reliability Corporation.
Description: Informational Filing of the North American Electric Reliability Corporation regarding Implementation of the Reliability Assurance Initiative.
Filed Date: 11/3/14.
Accession Number: 20141103–5199.
Comments Due: 5 p.m. ET 12/3/14.

The filings are accessible in the Commission's eLibrary system by clicking on the links or querying the docket number.

Any person desiring to intervene or protest in any of the above proceedings must file in accordance with Rules 211

and 214 of the Commission's Regulations (18 CFR 385.211 and 385.214) on or before 5:00 p.m. Eastern time on the specified comment date. Protests may be considered, but intervention is necessary to become a party to the proceeding.

eFiling is encouraged. More detailed information relating to filing requirements, interventions, protests, service, and qualifying facilities filings can be found at: *http://www.ferc.gov/docs-filing/efiling/filing-req.pdf.* For other information, call (866) 208–3676 (toll free). For TTY, call (202) 502–8659.

Dated: November 5, 2014.

Nathaniel J. Davis, Sr.,

Deputy Secretary.

[FR Doc. 2014–26927 Filed 11–13–14; 8:45 am]

BILLING CODE 6717–01–P

DEPARTMENT OF ENERGY

Federal Energy Regulatory Commission

[Docket No. OR15–3–000]

JBBR Pipeline LLC; Notice of Petition for Declaratory Order

Take notice that on November 3, 2014, pursuant to Rule 207(a)(2) of the Federal Energy Regulatory Commission's (Commission) Rules of Practice and Procedure, 18 CFR 385.207(a)(2) (2014), JBBR Pipeline LLC (JBBR Pipeline), filed a petition for declaratory order approving overall tariff and rate structure for new crude oil pipeline system from Joliet rail terminal to Mobil's Mokena-to-Joliet pipeline, and thence to Exxon Mobil's Joliet refinery, all as more fully explained in the petition.

Any person desiring to intervene or to protest this filing must file in accordance with Rules 211 and 214 of the Commission's Rules of Practice and Procedure (18 CFR 385.211, 385.214). Protests will be considered by the Commission in determining the appropriate action to be taken, but will not serve to make protestants parties to the proceeding. Any person wishing to become a party must file a notice of intervention or motion to intervene, as appropriate. Such notices, motions, or protests must be filed on or before the comment date. Anyone filing a motion to intervene or protest must serve a copy of that document on the Petitioner.

The Commission encourages electronic submission of protests and interventions in lieu of paper using the ''eFiling'' link at *http://www.ferc.gov.* Persons unable to file electronically should submit an original and 5 copies of the protest or intervention to the Federal Energy Regulatory Commission, 888 First Street NE., Washington, DC 20426.

This filing is accessible on-line at *http://www.ferc.gov,* using the ''eLibrary'' link and is available for review in the Commission's Public Reference Room in Washington, DC. There is an ''eSubscription'' link on the Web site that enables subscribers to receive email notification when a document is added to a subscribed docket(s). For assistance with any FERC Online service, please email *FERCOnlineSupport@ferc.gov,* or call (866) 208–3676 (toll free). For TTY, call (202) 502–8659.

Comment Date: 5:00 p.m. Eastern time on November 25, 2014.

Dated: November 6, 2014.

Kimberly D. Bose,

Secretary.

[FR Doc. 2014–26967 Filed 11–13–14; 8:45 am]

BILLING CODE 6717–01–P

DEPARTMENT OF ENERGY

Federal Energy Regulatory Commission

[Docket Nos. EG14–80–000, EG14–81–000, EG14–82–000, et al.]

Notice of Effectiveness of Exempt Wholesale Generator Status

	Docket Nos.
Mountain Creek Power, LLC	EG14–80–000
LaPorte Power, LLC	EG14–81–000
Handley Power, LLC	EG14–82–000
Regulus Solar, LLC	EG14–83–000
Major Oak Power, LLC	EG14–84–000
Green Pastures Wind I, LLC	EG14–85–000
Avalon Solar Partners, LLC	EG14–86–000
Energia Sierra Juarez, S. de R.L. de C.V	EG14–87–000
Energia Sierra Juarez U.S. Transmission, LLC	EG14–88–000
Longhorn Wind Project, LLC	EG14–89–000
TX Hereford Wind, LLC	EG14–90–000
Catalina Solar 2, LLC	EG14–91–000

Take notice that during the month of October 2014, the status of the above-captioned entities as Exempt Wholesale Generators became effective by operation of the Commission's regulations. 18 CFR 366.7(a).

Dated: November 6, 2014.

Kimberly D. Bose,

Secretary.

[FR Doc. 2014–26962 Filed 11–13–14; 8:45 am]

BILLING CODE 6717–01–P

DEPARTMENT OF ENERGY

Federal Energy Regulatory Commission

[Docket No. PF14–16–000]

Columbia Gulf Transmission, LLC; Supplemental Notice of Intent To Prepare an Environmental Assessment for the Planned Cameron Access Project and Request for Comments on Environmental Issues

On September 26, 2014, the Commission issued a ''*Notice of Intent to Prepare an Environmental Assessment for the Planned Cameron Access Project and Request for Comments on Environmental Issues''* (NOI). It has come to our attention that portions of the environmental mailing list were not provided copies of the NOI; therefore, we are issuing this Supplemental NOI to extend the scoping period and provide additional time for interested parties to file comments on environmental issues.

The staff of the Federal Energy Regulatory Commission (FERC or Commission) will prepare an environmental assessment (EA) that will

discuss the environmental impacts of the Cameron Access Project (Project) involving construction and operation of facilities by Columbia Gulf Transmission, LLC (Columbia Gulf) in Jefferson Davis, Calcasieu, and Cameron Parishes, Louisiana. The Commission will use this EA in its decision-making process to determine whether the planned Project is in the public convenience and necessity.

The Commission and its cooperating agencies continue to gather input from the public and interested agencies on the project. This process is referred to as scoping. Your input will help the Commission staff determine what issues they need to evaluate in the EA. The NOI identified October 27, 2014 as the close of the scoping period. Please note that the scoping period is now extended and will close on December 8, 2014.

This notice is being sent to the Commission's current environmental mailing list for this planned Project. State and local government representatives should notify their constituents of this planned Project and encourage them to comment on their areas of concern.

If you are a landowner receiving this notice, a pipeline company representative may contact you about the acquisition of an easement to construct, operate, and maintain the planned facilities. The company would seek to negotiate a mutually acceptable agreement. However, if the Commission approves the planned Project, that approval conveys with it the right of eminent domain. Therefore, if easement negotiations fail to produce an agreement, the pipeline company could initiate condemnation proceedings where compensation would be determined in accordance with state law.

A fact sheet prepared by the FERC entitled ''An Interstate Natural Gas Facility on My Land? What Do I Need To Know?'' is available for viewing on the FERC Web site (*www.ferc.gov*). This fact sheet addresses a number of typically-asked questions, including the use of eminent domain and how to participate in the Commission's proceedings.

Summary of the Planned Project

Columbia Gulf has announced their plans to expand and operate the existing Columbia Gulf West Lateral to increase the capacity of the Columbia Gulf system. The planned Cameron Access Project would provide improvements to the existing Columbia Gulf West Lateral pipeline and compression facilities to provide for additional market access to the existing Cameron LNG Terminal. Columbia Gulf plans to begin Project construction in September 2016 if all required permits, certificates, and authorizations are obtained. The Cameron Access Project would include the following facilities:

- 7.9 miles of 30-inch diameter natural gas pipeline loop [1] and associated ancillary facilities, designated West Lateral (WL) 400 Loop (400L), in Jefferson Davis Parish;
- 27.2 miles of 36-inch-diameter natural gas pipeline and associated ancillary facilities, designated WL 400, in Jefferson Davis, Cameron, and Calcasieu parishes (WL 400);
- one new point of delivery meter station, designated MS–4246, in Cameron Parish; and
- one new 10,200 horsepower compressor station, designated the Lake Arthur Compressor Station, in Jefferson Davis Parish.

Maps depicting the general location of the planned Project facilities are included in appendix 1.[2]

Land Requirements for Construction

Columbia Gulf is still in the planning phase for the Project and construction workspace requirements have not been finalized. However, construction would typically require a right-of-way width of 125 feet in uplands and 75 feet in wetlands. Columbia Gulf has estimated that 586 acres would be required for construction and 262 acres for operation of the Project.

The EA Process

The National Environmental Policy Act (NEPA) requires the Commission to take into account the environmental impacts that could result from an action whenever it considers the issuance of a Certificate of Public Convenience and Necessity. NEPA also requires us [3] to discover and address concerns the public may have about proposals. This process is referred to as ''scoping.'' The main goal of the scoping process is to focus the analysis in the EA on the important environmental issues. By this notice, the Commission requests public comments on the scope of the issues to address in the EA. We will consider all filed comments during the preparation of the EA.

In the EA we will discuss impacts that could occur as a result of the construction and operation of the planned Project under these general headings:

- Geology and soils;
- water resources and wetlands;
- fish, wildlife, and vegetation;
- threatened and endangered species;
- land use, recreation, and visual resources;
- air quality and noise;
- cultural resources;
- socioeconomics;
- reliability and public safety; and
- cumulative environmental impacts.

We will also evaluate reasonable alternatives to the planned Project or portions of the planned Project, and make recommendations on how to lessen or avoid impacts on the various resource areas.

Although no formal application has been filed, we have already initiated our NEPA review under the Commission's pre-filing process. The purpose of the pre-filing process is to encourage early involvement of interested stakeholders and to identify and resolve issues before the FERC receives an application. As part of our pre-filing review, we have begun to contact some federal and state agencies to discuss their involvement in the scoping process and the preparation of the EA.

The EA will present our independent analysis of the issues. The EA will be available in the public record through eLibrary. Depending on the comments received during the scoping process, we may also publish and distribute the EA to the public for an allotted comment period. We will consider all comments on the EA before making our recommendations to the Commission. To ensure we have the opportunity to consider and address your comments, please carefully follow the instructions in the Public Participation section on page 5.

With this notice, we are asking agencies with jurisdiction by law and/or special expertise with respect to the environmental issues related to this Project to formally cooperate with us in the preparation of the EA.[4] Agencies that would like to request cooperating agency status should follow the instructions for filing comments

[1] Looping is when one pipeline is laid parallel to another and is often used as a way to increase capacity along a right-of-way beyond what is possible on one line, or an expansion of an existing pipeline.

[2] The appendices referenced in this notice are not being printed in the **Federal Register**. Copies of appendices were sent to all those receiving this notice in the mail and are available at *www.ferc.gov* using the link called ''eLibrary'' or from the Commission's Public Reference Room, 888 First Street NE., Washington, DC 20426, or call (202) 502–8371. For instructions on connecting to eLibrary, refer to the last page of this notice.

[3] ''We,'' ''us,'' and ''our'' refer to the environmental staff of the Commission's Office of Energy Projects.

[4] The Council on Environmental Quality regulations addressing cooperating agency responsibilities are at Title 40, Code of Federal Regulations, § 1501.6.

provided under the Public Participation section of this notice.

Consultations Under Section 106 of the National Historic Preservation Act

In accordance with the Advisory Council on Historic Preservation's implementing regulations for section 106 of the National Historic Preservation Act, we are using this notice to initiate consultation with the applicable State Historic Preservation Office (SHPO), and to solicit their views and those of other government agencies, interested Indian tribes, and the public on the Project's potential effects on historic properties.[5] We will define the Project-specific Area of Potential Effects (APE) in consultation with the SHPO as the Project develops. On natural gas facility projects, the APE at a minimum encompasses all areas subject to ground disturbance (examples include construction right-of-way, contractor/pipe storage yards, compressor stations, and access roads). Our EA for this Project will document our findings on the impacts on historic properties and summarize the status of consultations under Section 106.

Public Participation

You can make a difference by providing us with your specific comments or concerns about the Project. Your comments should focus on the potential environmental effects, reasonable alternatives, and measures to avoid or lessen environmental impacts. The more specific your comments, the more useful they will be. To ensure that your comments are timely and properly recorded, please send your comments so that the Commission receives them in Washington, DC on or before December 8, 2014.

For your convenience, there are three methods which you can use to submit your comments to the Commission. In all instances, please reference the Project docket number (PF14–16–000) with your submission. The Commission encourages electronic filing of comments and has expert staff available to assist you at (202) 502–8258 or *efiling@ferc.gov.*

(1) You can file your comments electronically using the *eComment* feature on the Commission's Web site (*www.ferc.gov*) under the link to *Documents and Filings.* This is an easy method for interested persons to submit brief, text-only comments on a project;

(2) You can file your comments electronically using the *eFiling* feature on the Commission's Web site (*www.ferc.gov*) under the link to *Documents and Filings.* With eFiling, you can provide comments in a variety of formats by attaching them as a file with your submission. New eFiling users must first create an account by clicking on ''*eRegister.*'' You must select the type of filing you are making. If you are filing a comment on a particular project, please select ''*Comment on a Filing*''; or

(3) You can file a paper copy of your comments by mailing them to the following address: Kimberly D. Bose, Secretary, Federal Energy Regulatory Commission, 888 First Street NE., Room 1A, Washington, DC 20426.

Environmental Mailing List

The environmental mailing list includes federal, state, and local government representatives and agencies; elected officials; environmental and public interest groups; Indian Tribes; other interested parties; and local libraries and newspapers. This list also includes all affected landowners (as defined in the Commission's regulations) who are potential right-of-way grantors; whose property may be used temporarily for Project purposes, or who own homes within certain distances of aboveground facilities; and anyone who submits comments on the planned Project. We will update the environmental mailing list as the analysis proceeds to ensure that we send the information related to this environmental review to all individuals, organizations, and government entities interested in and/or potentially affected by the planned Project.

If we publish and distribute the EA, copies will be sent to the environmental mailing list for public review and comment. If you would prefer to receive a paper copy of the document instead of the CD version or would like to remove your name from the mailing list, please return the attached Information Request (Appendix 2).

Becoming an Intervenor

Once Columbia Gulf files its application with the Commission, you may want to become an ''intervenor'' which is an official party to the Commission's proceeding. Intervenors play a more formal role in the process and are able to file briefs, appear at hearings, and be heard by the courts if they choose to appeal the Commission's final ruling. An intervenor formally participates in the proceeding by filing a request to intervene. Instructions for becoming an intervenor are in the User's Guide under the ''*eFiling*'' link on the Commission's Web site. Please note that the Commission will not accept requests for intervenor status at this time. You must wait until the Commission receives a formal application for the planned Project.

Additional Information

Additional information about the Project is available from the Commission's Office of External Affairs, at (866) 208–FERC, or on the FERC Web site at *www.ferc.gov* using the ''*eLibrary*'' link. Click on the *eLibrary* link, click on ''*General Search*'' and enter the docket number, excluding the last three digits in the Docket Number field (i.e., PF14–16). Be sure you have selected an appropriate date range. For assistance, please contact FERC Online Support at *FercOnlineSupport@ferc.gov* or toll free at (866) 208–3676, or for TTY, contact (202) 502–8659. The *eLibrary* link also provides access to the texts of formal documents issued by the Commission, such as orders, notices, and rulemakings.

In addition, the Commission now offers a free service called eSubscription which allows you to keep track of all formal issuances and submittals in specific dockets. This can reduce the amount of time you spend researching proceedings by automatically providing you with notification of these filings, document summaries, and direct links to the documents. Go to *www.ferc.gov/docs-filing/esubscription.asp.*

Finally, public meetings or site visits will be posted on the Commission's calendar located at *www.ferc.gov/EventCalendar/EventsList.aspx* along with other related information.

Dated: November 6, 2014.

Kimberly D. Bose,

Secretary.

[FR Doc. 2014–26968 Filed 11–13–14; 8:45 am]

BILLING CODE 6717–01–P

[5] The Advisory Council on Historic Preservation's regulations are at Title 36, Code of Federal Regulations, Part 800. Those regulations define historic properties as any prehistoric or historic district, site, building, structure, or object included in or eligible for inclusion in the National Register of Historic Places.

DEPARTMENT OF ENERGY

Federal Energy Regulatory Commission

[Project No. 2524–021–OK]

Grand River Dam Authority; Notice of Availability of Draft Environmental Assessment

In accordance with the National Environmental Policy Act of 1969 and the Federal Energy Regulatory Commission's (Commission or FERC)

regulations, 18 CFR part 380 (Order No. 486, 52 FR 47897), the Office of Energy Projects has reviewed Grand River Dam Authority's application for license for the 260-megawatt (MW) Salina Pumped Storage Project (FERC Project No. 2524), located on Saline Creek and the Saline Creek arm of Lake Hudson on the Grand River, near the city of Salina in Mayes County, Oklahoma. The project does not occupy any Federal lands.

Staff prepared a draft environmental assessment (EA), which analyzes the potential environmental effects of relicensing the project, and concludes that relicensing the project, with appropriate environmental protective measures, would not constitute a major federal action that would significantly affect the quality of the human environment.

A copy of the draft EA is on file with the Commission and is available for public inspection. The draft may also be viewed on the Commission's Web site at *www.ferc.gov* using the ''eLibrary'' link. Enter the docket number excluding the last three digits in the docket number field to access the document. For assistance, contact FERC Online Support at *FERCOnlineSupport@ferc.gov* or toll-free at 1–866–208–3676, or for TTY, 202–502–8659.

You may also register online at *www.ferc.gov/docs-filing/esubscription.asp* to be notified via email of new filings and issuances related to this or other pending projects. For assistance, contact FERC Online Support.

Comments on the draft EA should be filed within 30 days from the date of this notice. The Commission strongly encourages electronic filing. Please file comments using the Commission's eFiling system at *http://www.ferc.gov/docs-filing/efiling.asp.* Commenters can submit brief comments up to 6,000 characters, without prior registration, using the eComment system at *http://www.ferc.gov/docs-filing/ecomment.asp.* You must include your name and contact information at the end of your comments. For assistance, please contact FERC Online Support at *FERCOnlineSupport@ferc.gov* or toll-free at 1–866–208–3676, or for TTY, 202–502–8659. In lieu of electronic filing, please send a paper copy to: Secretary, Federal Energy Regulatory Commission, 888 First Street NE., Washington, DC 20426. The first page of any filing should include docket number P–2524–021.

For further information, contact *Stephen Bowler by telephone at 202–502–6861 or by email at stephen.bowler@ferc.gov* or Jeanne Edwards by telephone at 202–502–6181 or by email at *jeanne.edwards@ferc.gov.*

Dated: November 4, 2014.

Kimberly D. Bose,

Secretary.

[FR Doc. 2014–26961 Filed 11–13–14; 8:45 am]

BILLING CODE 6717–01–P

DEPARTMENT OF ENERGY

Federal Energy Regulatory Commission

[Docket No. CP14–497–000]

Dominion Transmission, Inc.; Supplemental Notice of Additional Public Scoping Period and Meeting for the Proposed New Market Project and Request for Comments on Environmental Issues

The staff of the Federal Energy Regulatory Commission (FERC or Commission) will re-open the public scoping period and hold an additional public scoping meeting in Madison County, New York to receive comments on Dominion Transmission, Inc.'s (Dominion) New Market Project (Project), including alternative site locations under consideration for the proposed Sheds Compressor Station. The date, time, and location of the meeting is detailed in the table below.

Date and time	Location
Thursday, November 20, 2014 6:30 PM.*	Auditorium, Morrisville-Eaton Middle/High School, 5061 Fearon Rd., Morrisville, NY 13408

*The school ground will be open to meeting attendees starting at 6:00 PM.

In response to concerns raised regarding Dominion's proposed Sheds Compressor Station location, FERC staff is considering additional compressor station site alternatives. These alternatives, which are described below, could affect new landowners; therefore, the FERC is issuing this supplemental notice to provide these landowners and other interested parties an opportunity to comment on the Project. FERC staff will prepare an environmental assessment (EA) that will discuss the environmental impacts of the Project involving construction and operation of facilities by Dominion in multiple counties in upstate New York. The Commission will use this EA in its decision-making process to determine whether the Project is in the public convenience and necessity.

In addition to commenting at the public meeting, you may submit comments in writing. Further details on how to submit written comments are provided in the Public Participation section of this notice. Your input will help the Commission staff determine what issues it needs to evaluate in the EA. Please note that the re-opened scoping period will close on December 5, 2014.

This notice is being sent to the Commission's current environmental mailing list for this Project, including landowners within 0.5 mile of Sheds Compressor Station alternative sites at West Wilcox Road (West Eaton) and DeRuyter. State and local government representatives should notify their constituents of this proposed Project and encourage them to comment on their areas of concern.

If you are a landowner receiving this notice, a pipeline company representative may contact you about the acquisition of an easement to construct, operate, and maintain the proposed facilities. The company would seek to negotiate a mutually acceptable agreement. However, if the Commission approves the Project, that approval conveys with it the right of eminent domain. Therefore, if easement negotiations fail to produce an agreement, the pipeline company could initiate condemnation proceedings where compensation would be determined in accordance with state law.

Dominion provided landowners with a fact sheet prepared by the FERC entitled ''An Interstate Natural Gas Facility On My Land? What Do I Need To Know?'' This fact sheet addresses a number of typically-asked questions, including the use of eminent domain and how to participate in the Commission's proceedings. It is also available for viewing on the FERC Web site (*www.ferc.gov*).

Summary of the Proposed Project

Dominion proposes to construct and operate 2 new compressor stations and add additional compression and minor changes at 3 existing compressor stations. Dominion would also modify a meter station in Schenectady County, New York. Specifically, the New Market Project would consist of the following proposed facilities in New York:

- Construction of the new Horseheads Compressor Station in Chemung County;
- installation of gas coolers and filter/separator at the existing Borger Compressor Station in Tompkins County;
- construction of the new Sheds Compressor Station in Madison County;

• installation of gas coolers and filter/separator at the existing Utica Compressor Station in Herkimer County;

• installation of additional engine and turbine driven compressor units at the existing Brookman Compressor Station in Montgomery County; and

• modifications to the existing West Schenectady Meter Station in Schenectady County.

Although Dominion is proposing additional compressor stations, it is not proposing to increase the maximum allowable operating pressure on the pipeline. The general location of the Project facilities and alternative sites for the proposed Sheds Compressor Station are shown in appendix 1.[1]

Land Requirements for Construction

Construction of the proposed facilities would disturb about 200 acres of land for the aboveground facilities. Following construction, Dominion would maintain about 78 acres for permanent operation of the Project facilities; the remaining acreage would be restored and revert to former uses.

The EA Process

The National Environmental Policy Act (NEPA) requires the Commission to take into account the environmental impacts that could result from an action whenever it considers the issuance of a Certificate of Public Convenience and Necessity. NEPA also requires us[2] to discover and address concerns the public may have about proposals. This process is referred to as ''scoping.'' The main goal of the scoping process is to focus the analysis in the EA on the important environmental issues. By this notice, the Commission requests public comments on the scope of the issues to address in the EA. We will consider all filed comments during the preparation of the EA.

In the EA we will discuss impacts that could occur as a result of the construction and operation of the proposed Project under these general headings:

• Geology and soils;

• water resources, fisheries, and wetlands;

• cultural resources;

• socioeconomics;

• land use;

• vegetation and wildlife;

• air quality and noise; and

• public safety.

We will also evaluate cumulative impacts and reasonable alternatives to the proposed Project or portions of the Project, and make recommendations on how to lessen or avoid impacts on the various resource areas.

The EA will present our independent analysis of the issues. The EA will be available in the public record through the FERC's eLibrary system. Depending on the comments received during the scoping process, we may also publish and distribute the EA to the public for an allotted comment period. We will consider all comments on the EA before making our recommendations to the Commission. To ensure we have the opportunity to consider and address your comments, please carefully follow the instructions in the Public Participation section beginning on page 5.

With this notice, we are asking agencies with jurisdiction by law and/or special expertise with respect to the environmental issues of this Project to formally cooperate with us in the preparation of the EA[3]. Agencies that would like to request cooperating agency status should follow the instructions for filing comments provided under the Public Participation section of this notice. Currently, the New York State Department of Agriculture and Markets has expressed its intention to participate as a cooperating agency in the preparation of the EA to satisfy its NEPA responsibilities related to this Project.

Consultations Under Section 106 of the National Historic Preservation Act

In accordance with the Advisory Council on Historic Preservation's implementing regulations for Section 106 of the National Historic Preservation Act, we are using this notice to initiate consultation with the applicable State Historic Preservation Office (SHPO), and to solicit their views and those of other government agencies, interested Indian tribes, and the public on the Project's potential effects on historic properties.[4] We will define the project-specific Area of Potential Effects (APE) in consultation with the SHPO as the Project develops. On natural gas facility projects, the APE at a minimum encompasses all areas subject to ground disturbance (examples include construction right-of-way, contractor/pipe storage yards, compressor stations, and access roads). Our EA for this Project will document our findings on the impacts on historic properties and summarize the status of consultations under Section 106.

Currently Identified Environmental Issues

We have already identified several issues that we think deserve attention based on a preliminary review of the proposed facilities, comments received from the public, and the environmental information provided by Dominion. This preliminary list of issues may be changed based on your comments and our analysis.

• Air quality—health impacts from emissions;

• socioeconomic issues—traffic, home values;

• noise and vibration;

• land use—industrialization;

• visual impacts;

• cumulative impacts; and

• public safety.

Public Participation

You can make a difference by providing us with your specific comments or concerns about the Project. Your comments should focus on the potential environmental effects, reasonable alternatives, and measures to avoid or lessen environmental impacts. The more specific your comments, the more useful they will be. To ensure that your comments are timely and properly recorded, please send your comments so that the Commission receives them in Washington, DC on or before December 5, 2014.

For your convenience, there are three methods which you can use to submit your comments to the Commission. In all instances please reference the Project docket number (CP14–497–000) with your submission. The Commission encourages electronic filing of comments and has expert staff available to assist you at (202) 502–8258 or *efiling@ferc.gov.*

(1) You can file your comments electronically using the eComment feature on the Commission's Web site (*www.ferc.gov*) under the link to Documents and Filings. This is an easy method for interested persons to submit brief, text-only comments on the Project;

(2) You can file your comments electronically using the eFiling feature

[1] The appendices referenced in this notice will not appear in the **Federal Register**. Copies of appendices were sent to all those receiving this notice in the mail and are available at *www.ferc.gov* using the link called ''eLibrary'' or from the Commission's Public Reference Room, 888 First Street NE., Washington, DC 20426, or call (202) 502–8371. For instructions on connecting to eLibrary, refer to the last page of this notice.

[2] ''We,'' ''us,'' and ''our'' refer to the environmental staff of the Commission's Office of Energy Projects.

[3] The Council on Environmental Quality regulations addressing cooperating agency responsibilities are at Title 40, Code of Federal Regulations, Part 1501.6.

[4] The Advisory Council on Historic Preservation's regulations are at Title 36, Code of Federal Regulations, Part 800. Those regulations define historic properties as any prehistoric or historic district, site, building, structure, or object included in or eligible for inclusion in the National Register of Historic Places.

on the Commission's Web site (*www.ferc.gov*) under the link to Documents and Filings. With eFiling, you can provide comments in a variety of formats by attaching them as a file with your submission. New eFiling users must first create an account by clicking on ''eRegister.'' You must select the type of filing you are making. If you are filing a comment on a particular project, please select ''Comment on a Filing''; or

(3) You can file a paper copy of your comments by mailing them to the following address:

Kimberly D. Bose, Secretary, Federal Energy Regulatory Commission, 888 First Street NE., Room 1A, Washington, DC 20426.

Environmental Mailing List

The environmental mailing list includes Federal, State, and local government representatives and agencies; elected officials; environmental and public interest groups; Native American Tribes; other interested parties; and local libraries and newspapers. This list also includes all affected landowners (as defined in the Commission's regulations) who are potential right-of-way grantors, whose property may be used temporarily for Project purposes, or who own homes within certain distances of aboveground facilities, and anyone who submits comments on the Project. We will update the environmental mailing list as the analysis proceeds to ensure that we send the information related to this environmental review to all individuals, organizations, and government entities interested in and/or potentially affected by the proposed Project.

If we publish and distribute the EA, copies will be sent to the environmental mailing list for public review and comment. If you would prefer to receive a paper copy of the document instead of the CD version or would like to remove your name from the mailing list, please return the attached Information Request (appendix 2).

Becoming an Intervenor

In addition to involvement in the EA scoping process, you may want to become an ''intervenor'' which is an official party to the Commission's proceeding. Intervenors play a more formal role in the process and are able to file briefs, appear at hearings, and be heard by the courts if they choose to appeal the Commission's final ruling. An intervenor formally participates in the proceeding by filing a request to intervene. Instructions for becoming an intervenor are in the User's Guide under the ''e-filing'' link on the Commission's Web site.

Additional Information

Additional information about the Project is available from the Commission's Office of External Affairs, at (866) 208–FERC, or on the FERC Web site at *www.ferc.gov* using the ''eLibrary'' link. Click on the eLibrary link, click on ''General Search'' and enter the docket number, excluding the last three digits in the Docket Number field (i.e., CP14–497). Be sure you have selected an appropriate date range. For assistance, please contact FERC Online Support at *FercOnlineSupport@ferc.gov* or toll free at (866) 208–3676, or for TTY, contact (202) 502–8659. The eLibrary link also provides access to the formal documents issued by the Commission, such as orders, notices, and rulemakings.

In addition, the Commission now offers a free service called eSubscription which allows you to keep track of all formal issuances and submittals in specific dockets. This can reduce the amount of time you spend researching proceedings by automatically providing you with notification of these filings, document summaries, and direct links to the documents. Go to *www.ferc.gov/docs-filing/esubscription.asp.*

Finally, public meetings or site visits will be posted on the Commission's calendar located at *www.ferc.gov/EventCalendar/EventsList.aspx* along with other related information.

Dated: November 4, 2014.

Kimberly D. Bose,

Secretary.

[FR Doc. 2014–26960 Filed 11–13–14; 8:45 am]

BILLING CODE 6717–01–P

DEPARTMENT OF ENERGY

Federal Energy Regulatory Commission

[Docket No. EL15–14–000]

Energy Producers and Users Coalition; Notice of Petition for Declaratory Order

Take notice that on November 4, 2014, pursuant to Rule 207 of the Federal Energy Regulatory Commission's (Commission) Rules of Practice and Procedure, 18 CFR 385.207 (2014), Energy Producers and Users Coalition filed a petition for declaratory order finding that California Public Utilities Commission's approval [1] of as-available procurement options relying on short-run avoided cost pricing as part of the QF/CHP Settlement was an exercise of its authority under the Public Utilities Regulatory Policies Act.

Any person desiring to intervene or to protest this filing must file in accordance with Rules 211 and 214 of the Commission's Rules of Practice and Procedure (18 CFR 385.211, 385.214). Protests will be considered by the Commission in determining the appropriate action to be taken, but will not serve to make protestants parties to the proceeding. Any person wishing to become a party must file a notice of intervention or motion to intervene, as appropriate. Such notices, motions, or protests must be filed on or before the comment date. Anyone filing a motion to intervene or protest must serve a copy of that document on the Petitioner.

The Commission encourages electronic submission of protests and interventions in lieu of paper using the ''eFiling'' link at *http://www.ferc.gov.* Persons unable to file electronically should submit an original and 5 copies of the protest or intervention to the Federal Energy Regulatory Commission, 888 First Street NE., Washington, DC 20426.

This filing is accessible on-line at *http://www.ferc.gov,* using the ''eLibrary'' link and is available for review in the Commission's Public Reference Room in Washington, DC. There is an ''eSubscription'' link on the Web site that enables subscribers to receive email notification when a document is added to a subscribed docket(s). For assistance with any FERC Online service, please email *FERCOnlineSupport@ferc.gov,* or call (866) 208–3676 (toll free). For TTY, call (202) 502–8659.

Comment Date: 5:00 p.m. Eastern time on December 4, 2014.

Dated: November 6, 2014.

Kimberly D. Bose,

Secretary.

[FR Doc. 2014–26964 Filed 11–13–14; 8:45 am]

BILLING CODE 6717–01–P

DEPARTMENT OF ENERGY

Federal Energy Regulatory Commission

Notice of Commission Staff Attendance

The Federal Energy Regulatory Commission (Commission) hereby gives notice that members of the Commission's staff will attend the following meeting related to the Midcontinent Independent System Operator, Inc. (MISO)—PJM Interconnection, L.L.C. (PJM) Joint and

[1] *Decision Adopting Proposed Settlement,* D.10–12–035, Docket A.08–11–001 (December 21, 2010).

Common Market Initiative (Docket No. AD14–3–000):

MISO/PJM Joint Stakeholder Meeting—November 10, 2014.

The above-referenced meeting will be held at: MISO Headquarters, 720 City Center Drive, Carmel, IN 46032–7574

The above-referenced meeting is open to the public.

Further information may be found at *www.misoenergy.org.*

The discussions at the meeting described above may address matters at issue in the following proceedings:

Docket No. EL13–47, FirstEnergy Solutions Corp. and Allegheny Energy Supply Company, LLC v. PJM Interconnection, L.L.C.

Docket No. EL13–75, Indicated Load Serving Entities v. Midcontinent Independent System Operator, Inc. and PJM Interconnection, L.L.C.

Docket No. ER14–503, PJM Interconnection, L.L.C.

Docket No. EL13–88, Northern Indiana Public Service Company v. Midcontinent Independent System Operator, Inc. and PJM Interconnection, L.L.C.

Docket No. ER13–2233, Midcontinent Independent System Operator, Inc.

Docket No. EL11–34, Midcontinent Independent System Operator, Inc.

Docket No. EL14–21, Southwest Power Pool, Inc. v. Midcontinent Independent System Operator, Inc.

Docket No. EL14–30, Midcontinent Independent System Operator, Inc. v. Southwest Power Pool, Inc.

Docket No. ER11–1844, Midwest Independent Transmission System Operator, Inc.

Docket No. ER13–1864, Southwest Power Pool, Inc.

Docket Nos. ER13–1923, ER13–1938, ER13–1943, ER13–1945, Midcontinent Independent System Operator, Inc.

Docket Nos. ER13–1924, ER13–1926, ER13–1927, ER13–1936, ER13–1944, ER13–1947, PJM Interconnection, L.L.C.

Docket Nos. ER13–1937, ER13–1939, Southwest Power Pool, Inc.

Docket No. ER14–1174, Southwest Power Pool, Inc.

Docket No. ER14–1713, Midcontinent Independent System Operator, Inc.

Docket No. ER14–1736, Midcontinent Independent System Operator, Inc.

Docket No. ER14–2367, PJM Interconnection, L.L.C.

Docket No. ER14–2368, Midcontinent Independent System Operator, Inc.

Docket No. ER14–2445, Midcontinent Independent System Operator, Inc.

For more information, contact Mary Wierzbicki, Office of Energy Policy and Innovation, Federal Energy Regulatory Commission at (202) 502–6337 or *mary.cain@ferc.gov.*

Dated: November 6, 2014.

Kimberly D. Bose,

Secretary.

[FR Doc. 2014–26965 Filed 11–13–14; 8:45 am]

BILLING CODE 6717–01–P

DEPARTMENT OF ENERGY

Federal Energy Regulatory Commission

[Docket No. OR15–2–000]

Noble Energy, Inc.; Notice of Request for Temporary Waiver

Take notice that on October 30, 2014, pursuant to Rule 204 of the Federal Energy Regulatory Commission's (Commission) Rules of Practice and Procedure, 18 CFR 385.204 (2014), Noble Energy, Inc. filed a petition requesting a temporary waiver of sections 6 and 20 of the Interstate Commerce Act and parts 341 and 357 of the Commission's regulations, all as more fully explained in the petition.

Any person desiring to intervene or to protest this filing must file in accordance with Rules 211 and 214 of the Commission's Rules of Practice and Procedure (18 CFR 385.211, 385.214). Protests will be considered by the Commission in determining the appropriate action to be taken, but will not serve to make protestants parties to the proceeding. Any person wishing to become a party must file a notice of intervention or motion to intervene, as appropriate. Such notices, motions, or protests must be filed on or before the comment date. Anyone filing a motion to intervene or protest must serve a copy of that document on the Petitioner.

The Commission encourages electronic submission of protests and interventions in lieu of paper using the ''eFiling'' link at *http://www.ferc.gov.* Persons unable to file electronically should submit an original and 5 copies of the protest or intervention to the Federal Energy Regulatory Commission, 888 First Street NE., Washington, DC 20426.

This filing is accessible on-line at *http://www.ferc.gov,* using the ''eLibrary'' link and is available for review in the Commission's Public Reference Room in Washington, DC. There is an ''eSubscription'' link on the Web site that enables subscribers to receive email notification when a document is added to a subscribed docket(s). For assistance with any FERC Online service, please email *FERCOnlineSupport@ferc.gov,* or call (866) 208–3676 (toll free). For TTY, call (202) 502–8659.

Comment Date: 5:00 p.m. Eastern time on November 17, 2014.

Dated: November 6, 2014.

Kimberly D. Bose,

Secretary.

[FR Doc. 2014–26966 Filed 11–13–14; 8:45 am]

BILLING CODE 6717–01–P

ENVIRONMENTAL PROTECTION AGENCY

[EPA–HQ–OPP–2014–0521; FRL–9918–25]

Pesticide Experimental Use Permit; Receipt of Application; Comment Request

AGENCY: Environmental Protection Agency (EPA).

ACTION: Notice.

SUMMARY: This notice announces the EPA's receipt of an application 62719–EUP–AA from Dow AgroSciences LLC, requesting an experimental use permit (EUP). The EPA has determined that the permit may be of regional and national significance. Therefore, because of the potential significance, the EPA is seeking comments on this application.

DATES: Comments must be received on or before December 15, 2014.

ADDRESSES: Submit your comments, identified by docket identification (ID) number EPA–HQ–OPP–2014–0521, by one of the following methods:

- *Federal eRulemaking Portal: http://www.regulations.gov.* Follow the online instructions for submitting comments. Do not submit electronically any information you consider to be Confidential Business Information (CBI) or other information whose disclosure is restricted by statute.
- *Mail:* OPP Docket, Environmental Protection Agency Docket Center (EPA/DC), (28221T), 1200 Pennsylvania Ave. NW., Washington, DC 20460–0001.
- *Hand Delivery:* To make special arrangements for hand delivery or delivery of boxed information, please follow the instructions at *http://www.epa.gov/dockets/contacts.html.* Additional instructions on commenting or visiting the docket, along with more information about dockets generally, is available at *http://www.epa.gov/dockets.*

FOR FURTHER INFORMATION CONTACT: Robert McNally, Biopesticides and Pollution Prevention Division (7511P), Office of Pesticide Programs, Environmental Protection Agency, 1200 Pennsylvania Ave. NW., Washington, DC 20460–0001; main telephone

number: (703) 305–7090; email address: *BPPDFRNotices@epa.gov.*

SUPPLEMENTARY INFORMATION:

I. General Information

A. Does this action apply to me?

This action is directed to the public in general. Although this action may be of particular interest to those persons who conduct or sponsor research on pesticides, the EPA has not attempted to describe all the specific entities that may be affected by this action.

B. What should I consider as I prepare my comments for the EPA?

1. *Submitting CBI.* Do not submit this information to the EPA through regulations.gov or email. Clearly mark the part or all of the information that you claim to be CBI. For CBI information in a disk or CD–ROM that you mail to the EPA, mark the outside of the disk or CD–ROM as CBI and then identify electronically within the disk or CD–ROM the specific information that is claimed as CBI. In addition to one complete version of the comment that includes information claimed as CBI, a copy of the comment that does not contain the information claimed as CBI must be submitted for inclusion in the public docket. Information so marked will not be disclosed except in accordance with procedures set forth in 40 CFR part 2.

2. *Tips for preparing your comments.* When preparing and submitting your comments, see the commenting tips at *http://www.epa.gov/dockets/comments.html.*

3. *Environmental justice.* The EPA seeks to achieve environmental justice, the fair treatment and meaningful involvement of any group, including minority and/or low income populations, in the development, implementation, and enforcement of environmental laws, regulations, and policies. To help address potential environmental justice issues, the EPA seeks information on any groups or segments of the population who, as a result of their location, cultural practices, or other factors, may have atypical or disproportionately high and adverse human health impacts or environmental effects from exposure to the pesticides) discussed in this document, compared to the general population.

II. What action is the EPA taking?

Under section 5 of the Federal Insecticide, Fungicide, and Rodenticide Act (FIFRA), 7 U.S.C. 136c, the EPA can allow manufacturers to field test pesticides under development. Manufacturers are required to obtain an EUP before testing new pesticides or new uses of pesticides if they conduct experimental field tests on 10 acres or more of land or one acre or more of water.

Pursuant to 40 CFR 172.11(a), the EPA has determined that the following EUP application may be of regional and national significance, and therefore is seeking public comment on the EUP application:

Submitter: Dow AgroSciences LLC, (62719–EUP–AA).

Pesticide Chemicals: (1) *Bacillus thuringiensis* Cry1A.105 and Cry2Ab2 proteins and the genetic material necessary for their production (vector PV–ZMIR245) in corn event MON 89034 (OECD Unique Identifier: MON–89–34–3), (2) *Bacillus thuringiensis* Cry3Bb1 protein and the genetic material necessary for its production (vector PV–ZMIR39) in corn event MON 88017 (OECD Unique Identifier: MON–88–17–3), (3) *Bacillus thuringiensis* Cry1F protein and the genetic material necessary for its production (vector PHP8999) in corn event TC1507 (OECD Unique Identifier: DAS–15–7–1), (4) *Bacillus thuringiensis* Cry34Ab1 and Cry35Ab1 proteins and the genetic material necessary for their production (vector PHP17662) in corn event DAS–59122–7 (OECD Unique Identifier: DAS–59122–7), and/or (5) Double-stranded ribonucleic acid (dsRNA) transcript comprising a DvSnf7 inverted repeat sequence derived from western corn rootworm (*Diabrotica virgifera virgifera*) and *Bacillus thuringiensis* Cry3Bb1 protein and the genetic material necessary for their production (vector PV–ZMIR10871) in corn event MON 87411 (OECD Unique Identifier: MON–87411–9).

Summary of Request: Dow AgroSciences LLC, is proposing to test MON 87411, a new plant-incorporated protectant (PIP) technology, alone and in combination with other PIPs in corn to generate data and information that is intended to support future PIP registration applications (e.g., PIPs with multiple modes of action against corn rootworm and/or lepidopteran corn pests). Dow AgroSciences LLC's proposed experimental program would begin on January 1, 2015, and go until March 31, 2016; would take place on 9,038 acres in Arkansas, Hawaii, Illinois, Indiana, Iowa, Kansas, Minnesota, Missouri, Nebraska, North Dakota, Ohio, Pennsylvania, Puerto Rico, South Dakota, Texas, and Wisconsin; and would use 8,720.37 grams of active ingredient. Trial protocols will concentrate on seed development for future testing, nursery observations of PIPs in various genetic backgrounds, phenotypic and agronomic observations, efficacy and yield benefits, and regulatory studies.

Following the review of the application and any comments and data received in response to this solicitation, the EPA will decide whether to issue or deny the EUP request, and if issued, the conditions under which it is to be conducted. Any issuance of an EUP will be announced in the **Federal Register**.

Authority: 7 U.S.C. 136 *et seq.*

Dated: October 24, 2014.

Robert McNally,

Director, Biopesticides and Pollution Prevention Division, Office of Pesticide Programs.

[FR Doc. 2014–26867 Filed 11–13–14; 8:45 am]

BILLING CODE 6560–50–P

ENVIRONMENTAL PROTECTION AGENCY

[EPA–HQ–OPPT–2015–0707; FRL–9917–95]

Certain New Chemicals; Receipt and Status Information

AGENCY: Environmental Protection Agency (EPA).

ACTION: Notice.

SUMMARY: EPA is required under the Toxic Substances Control Act (TSCA) to publish in the **Federal Register** a notice of receipt of a premanufacture notice (PMN); an application for a test marketing exemption (TME), both pending and/or expired; and a periodic status report on any new chemicals under EPA review and the receipt of notices of commencement (NOC) to manufacture those chemicals. This document covers the period from September 16, 2014 to October 3, 2014.

DATES: Comments identified by the specific PMN number, must be received on or before December 15, 2014.

ADDRESSES: Submit your comments, identified by docket identification (ID) number EPA–HQ–OPPT–2015–0707, and the specific PMN number or TME number for the chemical related to your comment, by one of the following methods:

- *Federal eRulemaking Portal: http://www.regulations.gov.* Follow the online instructions for submitting comments. Do not submit electronically any information you consider to be Confidential Business Information (CBI) or other information whose disclosure is restricted by statute.
- *Mail:* Document Control Office (7407M), Office of Pollution Prevention and Toxics (OPPT), Environmental

Protection Agency, 1200 Pennsylvania Ave. NW., Washington, DC 20460–0001.

• *Hand Delivery:* To make special arrangements for hand delivery or delivery of boxed information, please follow the instructions at *http://www.epa.gov/dockets/contacts.html.*

Additional instructions on commenting or visiting the docket, along with more information about dockets generally, is available at *http://www.epa.gov/dockets.*

FOR FURTHER INFORMATION CONTACT: *For technical information contact:* Bernice Mudd, Information Management Division (7407M), Office of Pollution Prevention and Toxics, Environmental Protection Agency, 1200 Pennsylvania Ave. NW., Washington, DC 20460–0001; telephone number: (202) 564–8951; email address: *mudd.bernice@epa.gov.*

For general information contact: The TSCA-Hotline, ABVI-Goodwill, 422 South Clinton Ave., Rochester, NY 14620; telephone number: (202) 554–1404; email address: *TSCA-Hotline@epa.gov.*

SUPPLEMENTARY INFORMATION:

I. General Information

A. Does this action apply to me?

This action is directed to the public in general. As such, the Agency has not attempted to describe the specific entities that this action may apply to. Although others may be affected, this action applies directly to the submitter of the PMNs addressed in this action.

B. What should I consider as I prepare my comments for EPA?

1. *Submitting CBI.* Do not submit this information to EPA through regulations.gov or email. Clearly mark the part or all of the information that you claim to be CBI. For CBI information in a disk or CD–ROM that you mail to EPA, mark the outside of the disk or CD–ROM as CBI and then identify electronically within the disk or CD–ROM the specific information that is claimed as CBI. In addition to one complete version of the comment that includes information claimed as CBI, a copy of the comment that does not contain the information claimed as CBI must be submitted for inclusion in the public docket. Information so marked will not be disclosed except in accordance with procedures set forth in 40 CFR part 2.

2. *Tips for preparing your comments.* When preparing and submitting your comments, see the commenting tips at *http://www.epa.gov/dockets/comments.html.*

II. What action is the Agency taking?

This document provides receipt and status reports, which cover the period from September 16, 2014 to October 3, 2014, and consists of PMNs both pending and/or expired, and the NOCs to manufacture a new chemical that the Agency has received under TSCA section 5 during this time period.

III. What is the Agency's authority for taking this action?

Section 5 of TSCA requires that EPA periodical publish in the **Federal Register** receipt and status reports, which cover the following EPA activities required by provisions of TSCA section 5.

EPA classifies a chemical substance as either an ''existing'' chemical or a ''new'' chemical. Any chemical substance that is not on EPA's TSCA Inventory is classified as a ''new chemical,'' while those that are on the TSCA Inventory are classified as an ''existing chemical.'' For more information about the TSCA Inventory go to: *http://www.epa.gov/opptintr/newchems/pubs/inventory.htm.* Anyone who plans to manufacture or import a new chemical substance for a non-exempt commercial purpose is required by TSCA section 5 to provide EPA with a PMN, before initiating the activity. Section 5(h)(1) of TSCA authorizes EPA to allow persons, upon application, to manufacture (includes import) or process a new chemical substance, or a chemical substance subject to a significant new use rule (SNUR) issued under TSCA section 5(a), for ''test marketing'' purposes, which is referred to as a test marketing exemption, or TME. For more information about the requirements applicable to a new chemical go to: *http://www.epa.gov/oppt/newchems.*

Under TSCA sections 5(d)(2) and 5(d)(3), EPA is required to publish in the **Federal Register** a notice of receipt of a PMN or an application for a TME and to publish in the **Federal Register** periodic status reports on the new chemicals under review and the receipt of NOCs to manufacture those chemicals.

IV. Receipt and Status Reports

In Table I. of this unit, EPA provides the following information (to the extent that such information is not claimed as CBI) on the PMNs received by EPA during this period: The EPA case number assigned to the PMN, the date the PMN was received by EPA, the projected end date for EPA's review of the PMN, the submitting manufacturer/importer, the potential uses identified by the manufacturer/importer in the PMN, and the chemical identity.

TABLE I—31 PMNS RECEIVED FROM 9/16/14 TO 10/3/14

Case No.	Received date	Projected notice end date	Manufacturer/importer	Use	Chemical
P–14–0846	9/15/2014	12/14/2014	Alberdingk Boley Inc ..	(S) Coating for wood ..	(G) Alkanoic acid, hydroxy-(hydroxyalkyl)-methyl-, polymer with diisocyanatoalkane,-hydro—hydroxypoly(oxy-alkanediyl) and isocyanato-1-(isocyanatoalkyl)-trimethylcycloalkane, tetrahydroxyalkanel triacrylate-blocked, compd. with triethylamine.
P–14–0849	9/16/2014	12/15/2014	CBI	(G) Intermediate	(G) Amine terminated copolymer.
P–14–0850	9/17/2014	12/16/2014	Mcgean-Rohco Inc. 130130.	(S) Grain refiner for alkaline zinc electro deposits.	(S) 1-methylpyridinium-3-carboxylate.
P–14–0851	9/17/2014	12/16/2014	CBI	(S) Reactive polymer for use in adhesive applications.	(G) Polyurethane.
P–14–0852	9/17/2014	12/16/2014	CBI	(G) Reactive polymer for use in adhesive applications.	(G) Polyurethane.

TABLE I—31 PMNS RECEIVED FROM 9/16/14 TO 10/3/14—Continued

Case No.	Received date	Projected notice end date	Manufacturer/importer	Use	Chemical
P–14–0853	9/17/2014	12/16/2014	CBI	(G) Reactive polymer for use in adhesive applications.	(G) Polyurethane.
P–14–0854	9/17/2014	12/16/2014	CBI	(G) Reactive polymer for use in adhesive applications.	(G) Polyurethane.
P–14–0855	9/17/2014	12/16/2014	CBI	(S) Reactive polymer for use in adhesive applications.	(G) Polyurethane.
P–14–0856	9/17/2014	12/16/2014	CBI	(S) Reactive polymer for use in adhesive applications.	(G) Polyurethane.
P–14–0857	9/17/2014	12/16/2014	CBI	(S) Reactive polymer for use in adhesive applications.	(G) Polyurethane.
P–14–0858	9/17/2014	12/16/2014	CBI	(S) Reactive polymer for use in adhesive applications.	(G) Polyurethane.
P–14–0859	9/17/2014	12/16/2014	CBI	(G) Agriculture Fertilizer.	(G) Iron EDDHSA.
P–14–0861	9/19/2014	12/18/2014	Kaneka North America LLC.	(G) Component of adhesive.	(G) Alkyl alkenoic acid, alkyl ester, telomer with alkyl alkenoate, trialkoxysilyl substituted alkane and trilalkoxysilyl alkyl alkyl alkenoate, bis substituted diazenyl-initiated.
P–14–0862	9/22/2014	12/21/2014	CBI	(G) Industrial intermediate.	(G) Furanose ester.
P–14–0863	9/22/2014	12/21/2014	CBI	(G) Acrylic pressure sensitive adhesive.	(G) Solution acrylic polymer.
P–14–0865	9/23/2014	12/22/2014	CBI	(G) Isolated intermediate.	(G) Aromatic amide oxime.
P–14–0868	9/26/2014	12/25/2014	Allnex USA Inc.	(S) Coatings for automobile headlights, polycarbonate glazing, and films.	(G) Substituted carbopolycycle, polymer with disubstituted alkane substituted alkyl acrylate-blocked.
P–14–0869	9/26/2014	12/25/2014	H.B. Fuller Company	(G) Industrial adhesive	(G) Hexanedioic acid, polymer with alkyldiol, 1,6-hexanediol, dicarboxylic acid anhydride, 1,1′-methylenebis[isocyanatobenzene], alkylene oxides and .alpha., .alpha.′, .alpha.″-1,2,3-propanetriyltris[.omega.-hydroxypoly[oxy(methyl-1,2-ethanediyl)]].
P–14–0870	9/26/2014	12/25/2014	H.B. Fuller Company	(G) Industrial adhesive	(G) Hexanedioic acid, polymer with alkyldiol, 1,6-hexanediol, dicarboxylic acid anhydride, 1,1′-methylenebis[4-isocyanatobenzene], alkylene oxides and .alpha., .alpha.′, .alpha.″-1,2,3-propanetriyltris[.omega.-hydroxypoly[oxy(methyl-1,2-ethanediyl)]].
P–14–0871	9/29/2014	12/28/2014	CBI	(G) Asphalt additive	(G) Fatty acid rxn products with aminoalkylhydroxyamines.
P–14–0872	9/29/2014	12/28/2014	CBI	(G) Asphalt additive	(G) Fatty acid rxn products with aminoalkyamines.
P–14–0873	9/30/2014	12/29/2014	CBI	(S) Chemical intermediate for use in the manufacture of a dye.	(G) Substituted naphthalenesulfonic acid.
P–14–0874	9/30/2014	12/29/2014	CBI	(G) Ingredient in a coating for industrial equipment.	(G) Polyacrylate.
P–15–0001	10/3/2014	1/1/2015	Croda	(G) Inert surfactant in food use and non-food use pesticide formulations.	(S) Oxirane, 2-methyl-, polymer with oxirane, monohexadecyl ether, phosphate.
P–15–0002	10/3/2014	1/1/2015	Croda	(G) Inert surfactant in food use and non-food use pesticide formulations.	(S) Oxirane, 2-methyl-, polymer with oxirane, monohexadecyl ether, phosphate, sodium salt.
P–15–0003	10/3/2014	1/1/2015	Croda	(G) Inert surfactant in food use and non-food use pesticide formulations.	(S) Oxirane, 2-methyl-, polymer with oxirane, monohexadecyl ether, phosphate, potassium salt.

TABLE I—31 PMNS RECEIVED FROM 9/16/14 TO 10/3/14—Continued

Case No.	Received date	Projected notice end date	Manufacturer/importer	Use	Chemical
P–15–0004	10/3/2015	1/1/2015	Croda	(G) Inert surfactant in food use and non-food use pesticide formulations.	(S) Oxirane, 2-methyl-, polymer with oxirane, monohexadecyl ether, phosphate, ammonium salt.
P–15–0005	10/3/2014	1/1/2015	Croda	(G) Inert surfactant in food use and non-food use pesticide formulations.	(S) Ethanol, 2-amino-, compound, with 2-methyloxirane polymer with oxirane monohexadecyl ether phosphate.
P–15–0006	10/3/2014	1/1/2015	Croda	(G) Inert surfactant in food use and non-food use pesticide formulations.	(S) Ethanol, 2-amino-, compound, with 2-methyloxirane polymer with oxirane monohexadecyl ether phosphate.
P–15–0007	10/3/2014	1/1/2015	Shin Etsu Silicones of America.	(G) The release agent including this material are applied to a dye.	(G) Organopolysiloxane.
P–15–0009	10/6/2014	1/1/2015	International Flavors & Fragrances Inc.	(S) Fragrance ingredient for use in fragrances for soaps, detergents, cleaners and other household products.	(S) Cyclohecane, 2-ethoxy-1,3-dimethyl-*.

In Table II. of this unit, EPA provides the following information (to the extent that such information is not claimed as CBI) on the NOCs received by EPA during this period: The EPA case number assigned to the NOC, the date the NOC was received by EPA, the projected end date for EPA's review of the NOC, and chemical identity.

TABLE II—35 NOCS RECEIVED FROM 9/16/14 TO 10/3/14

Case No.	Received date	Commencement notice end date	Chemical
P–14–0566	9/15/2014	9/6/2014	(S) Mixture of 4-decenal,9-hydroxy-5,9-dimethyl-, (4*Z*)-.
P–13–0429	9/17/2014	8/27/2014	(G) Acrylic copolymer emulsion.
P–13–0516	9/17/2014	8/27/2014	(G) Alkanedioic acid, polymer with (haloalkyl)oxirane, (hydroxyalkyl)-alkyldiol, (alkylethylidene)bis[hydroxybenzene] and oxirane-alkenoate polymer with hydroxy-(hydroxyalkyl)-alkanoic acid and isocyanato-(isocyanatoalkyl)-cycloalkane, compound with *N,N*-dialkylalkylamine.
P–13–0334	9/17/2014	8/28/2014	(G) Propenoic acid ester, polymer with alkyl propenoate, *N*-(dimethyloxoalkyl)alkylamide, alkenylbenzene, alkyl propenoate and alkyl alkyl propenoate.
P–13–0335	9/17/2014	8/28/2014	(G) Propenoic acid ester, polymer with alkyl propenoate, *N*-(dimethyloxoalkyl)alkylamide, alkenylbenzene and alkyl alkyl propenoate.
P–14–0302	9/17/2014	9/8/2014	(G) Alkanedioic acid, polymer with dialkyl carbonate, alkanediol, hydroxy-(hydroxymethyl)-2-alkylcarboxylic acid, methylenebis[isocyanatocycloalkane] and alkyl-2-alkenoate, compound with *N,N*-dialkylalkylamine.
P–14–0031	9/17/2014	9/11/2014	(G) Substituted fatty acids, polymers with alkanedioic acid, substituted carbomonocycles, substituted alkanoates, alkanediol, compounds. with substituted alkanol.
P–08–0551	9/18/2014	11/20/2010	(S) 1-propene, 1,3,3,3-tetrafluoro-, (1*Z*)-.
P–14–0514	9/19/2014	9/10/2014	(G) Acrylic copolymer.
P–14–0515	9/19/2014	9/10/2014	(G) Acrylic copolymer.
P–14–0516	9/19/2014	9/10/2014	(G) Acrylic copolymer.
P–13–0951	9/22/2014	9/8/2014	(G) Zinc carboxylate.
P–14–0495	9/23/2014	9/5/2014	(S) Hexanedioic acid, polymers with 1,3-butanediol, 1,4-butanediol, di-et malonate, 1,6-diisocyanatohexane, ethoxylated reduced me esters of reduced polymound. oxidized tetrafluoroethylene, 1,6-hexanediol, 1,1′-methylenebis[isocyanatobenzene], propylene glycol and tripropylene glycol.
P–09–0066	9/23/2014	9/8/2014	(G) Benzoic acid phenyl ester.
P–14–0440	9/24/2014	8/27/2014	(G) Arylalkylphosphonium salt.
P–14–0042	9/24/2014	9/4/2014	(G) Substituted perfluoroether.
P–14–0306	9/24/2014	9/24/2014	(G) Alklyl borate ester.
P–14–0359	9/25/2014	9/18/2014	(G) Sulfurized olefin and oil.
P–14–0505	9/26/2014	8/27/2014	(G) 2-propenoic acid,1,1-[2-ethyl-2-[[(1-oxo-2-propen-1-yl)oxy]methyl]-1,3-propanediyl] ester, polymer with 1,1-(1,2-ethanediyl) ester.
P–14–0439	9/26/2014	9/4/2014	(G) Aryl-substituted amide.

TABLE II—35 NOCS RECEIVED FROM 9/16/14 TO 10/3/14—Continued

Case No.	Received date	Commencement notice end date	Chemical
P–96–0190	9/26/2014	9/4/2014	(S) 2,5-furandione, polymer with 1,2-ethanediol, 2,2′-[(4-methylphenyl)imino]bis[ethanol], 2,2′-oxybis[ethanol] and 3a,4,7,7a-tetrahydro-4,7-methano-1*H*-indene.
P–14–0521	9/29/2014	9/17/2014	(G) Methylenediphenyl diisocyanate prepolymer.
P–14–0354	9/30/2014	9/4/2014	(G) Depolymerized polyurethane.
P–13–0646	9/30/2014	9/11/2014	(G) Fluoroalkyl acrylate copolymer modified with polysiloxanes.
P–13–0647	9/30/2014	9/11/2014	(G) Fluoroalkyl acrylate copolymer.
P–13–0648	9/30/2014	9/11/2014	(G) Fluoroalkyl acrylate copolymer modified with polysiloxanes.
P–13–0649	9/30/2014	9/11/2014	(G) Fluoroalkyl acrylate copolymer.
P–13–0678	9/30/2014	9/11/2014	(G) Fluoroalkyl methylacrylate copolymer.
P–13–0679	9/30/2014	9/11/2014	(G) Fluoroalkyl acrylate copolymer.
P–13–0849	9/30/2014	9/26/2014	(G) Modified polymer of ethenylbenzene, buta-1,3-diene, and substituted methyl acrylates.
P–14–0380	10/1/2014	9/10/2014	(S) Cashew, nutshell liquid, reaction products with aniline and formaldehyde.
P–14–0268	10/6/2014	9/15/2014	(S) Carbamic acid, *N*-(3-isoocyanatomethylphenyl)-, 2-[2-(2-butoxyethoxy)ethoxy]ethyl ester.
P–14–0441	10/6/2014	9/24/2014	(G) Heterocylic dione polymer with alkenylbenzene and alkoxpoly(oxy-alkanediyl)alkylacrylate.
P–14–0945	7/23/14	7/9/14	(G) Alkoxysilane.
P–14–0946	7/23/14	7/9/14	(G) Alkoxysilane.

If you are interested in information that is not included in these tables, you may contact EPA as described in Unit II. to access additional non-CBI information that may be available.

Authority: 15 U.S.C. 2601 *et seq.*

Dated: October 27, 2014.

Chandler Sirmons,

Acting Director, Information Management Division, Office of Pollution Prevention and Toxics.

[FR Doc. 2014–26903 Filed 11–13–14; 8:45 am]

BILLING CODE 6560–50–P

ENVIRONMENTAL PROTECTION AGENCY

[ER–FRL–9017–9]

Environmental Impact Statements; Notice of Availability

Responsible Agency: Office of Federal Activities, General Information (202) 564–7146 or *http://www.epa.gov/compliance/nepa/.*

Weekly receipt of Environmental Impact Statements.

Filed 11/03/2014 Through 11/07/2014.

Pursuant to 40 CFR 1506.9.

Notice: Section 309(a) of the Clean Air Act requires that EPA make public its comments on EISs issued by other Federal agencies. EPA's comment letters on EISs are available at: *http://www.epa.gov/compliance/nepa/eisdata.html.*

EIS No. 20140321, Final EIS, NRC, MO, Generic—License Renewal of Nuclear Plants, Supplement 51 Regarding Callaway Plant, Unit 1, review period ends: 12/15/2014, Contact: Tam Tran 301–415–3617.

EIS No. 20140322, Final EIS, USFS, MT, Cedar-Thom Project, review period ends: 12/29/2014, Contact: Patricia Partyka 406–826–4314.

EIS No. 20140323, Final EIS, NPS, NV, Cottonwood Cove and Katherine Landing Final Development Concept Plans, review period ends: 12/15/2014, Contact: Greg Jarvis 303–969–2263.

EIS No. 20140324, Second Final EIS (Tiering), NASA, FL, Tier 2—Mars 2020 Mission, review period ends: 12/15/2014, Contact: George Tahu 202–358–0016.

EIS No. 20140325, Draft EIS, FRA, CA, Coast Corridor Improvements, comment period ends: 01/07/2015, Contact: Stephanie Perez 202–493–0388.

EIS No. 20140326, Draft EIS, FHWA, WI, I–94 East-West Corridor, comment period ends: 01/13/2015, Contact: George Poirier 608–829–7500.

EIS No. 20140327, Draft EIS, FERC, OR, Jordan Cove Energy and Pacific Connector Gas Pipeline Project, comment period ends: 02/13/2015, Contact: Paul Friedman 202–502–8059.

EIS No. 20140328, Draft Supplement, USFS, NM, North Fork Wells of Eagle Creek, comment period ends: 12/29/2014, Contact: David M. Warnack 575–257–4095.

EIS No. 20140329, Draft EIS, USFS, OR, Lower Joseph Creek Restoration Project, comment period ends: 02/12/2015, Contact: Ayn Shlisky 541–278–3762.

Amended Notices:

EIS No. 20140293, Draft EIS, NMFS, 00, Omnibus Essential Fish Habitat Amendment 2, comment period ends: 01/08/2015, Contact: John K. Bullard 978–281–9315.

Revision to FR Notice Published 10/10/2014; extending comment period from 12/09/2014 to 01/08/2015

Dated: November 10, 2014.

Cliff Rader,

Director, NEPA Compliance Division, Office of Federal Activities.

[FR Doc. 2014–27023 Filed 11–13–14; 8:45 am]

BILLING CODE 6560–50–P

FEDERAL COMMUNICATIONS COMMISSION

[OMB 3060–1186]

Information Collection Being Submitted for Review and Approval to the Office of Management and Budget

AGENCY: Federal Communications Commission.

ACTION: Notice and request for comments.

SUMMARY: As part of its continuing effort to reduce paperwork burdens, and as required by the Paperwork Reduction Act (PRA) of 1995 (44 U.S.C. 3501–3520), the Federal Communications Commission (FCC or Commission) invites the general public and other Federal agencies to take this opportunity to comment on the following information collections. Comments are requested concerning: Whether the proposed collection of information is necessary for the proper performance of the functions of the Commission, including whether the information shall have practical utility;

the accuracy of the Commission's burden estimate; ways to enhance the quality, utility, and clarity of the information collected; ways to minimize the burden of the collection of information on the respondents, including the use of automated collection techniques or other forms of information technology; and ways to further reduce the information collection burden on small business concerns with fewer than 25 employees. The FCC may not conduct or sponsor a collection of information unless it displays a currently valid OMB control number. No person shall be subject to any penalty for failing to comply with a collection of information subject to the PRA that does not display a valid OMB control number.

DATES: Written comments should be submitted on or before December 15, 2014. If you anticipate that you will be submitting comments, but find it difficult to do so within the period of time allowed by this notice, you should advise the contacts below as soon as possible.

ADDRESSES: Direct all PRA comments to Nicholas A. Fraser, OMB, via email *Nicholas_A._Fraser@omb.eop.gov;* and to Nicole Ongele, FCC, via email *PRA@fcc.gov* and to *Nicole.Ongele@fcc.gov.* Include in the comments the OMB control number as shown in the **SUPPLEMENTARY INFORMATION** section below.

FOR FURTHER INFORMATION CONTACT: For additional information or copies of the information collection, contact Nicole Ongele at (202) 418–2991.

To view a copy of this information collection request (ICR) submitted to OMB: (1) Go to the Web page <*http://www.reginfo.gov/public/do/PRAMain*>, (2) look for the section of the Web page called ''Currently Under Review,'' (3) click on the downward-pointing arrow in the ''Select Agency'' box below the ''Currently Under Review'' heading, (4) select ''Federal Communications Commission'' from the list of agencies presented in the ''Select Agency'' box, (5) click the ''Submit'' button to the right of the ''Select Agency'' box, (6) when the list of FCC ICRs currently under review appears, look for the OMB control number of this ICR and then click on the ICR Reference Number. A copy of the FCC submission to OMB will be displayed.

SUPPLEMENTARY INFORMATION:

OMB Control Number: 3060–1186.

Title: Rural Call Completion, WC Docket No. 13–39.

Form Number: N/A.

Type of Review: Revision of a currently approved collection.

Respondents: Businesses or other for-profit entities.

Number of Respondents and Responses: 225 respondents; 940 responses.

Estimated Time per Response: 12.5 hours (per quarter).

Frequency of Response: Quarterly and one-time reporting requirements and recordkeeping.

Obligation to Respond: Required to obtain or retain benefit. The statutory authority for the information collection requirements are contained in section contained in 47 U.S.C. 151, 154(i), 201(b), 202(a), 218, 220(a), 251(a), 403.

Total Annual Burden: 11,280 hours.

Total Annual Cost: $793,750.

Privacy Impact Assessment: No impact(s).

Nature and Extent of Confidentiality: An assurance of confidentiality is not offered because this information collection does not require the collection of personally identifiable information from individuals. If the FCC requests that respondents submit information which respondents believe is confidential, respondents may request confidential treatment of such information pursuant to Section 0.459 of the FCC's rules, 47 CFR 0.459.

Needs and Uses: The rules adopted in the *Rural Call Completion Report and Order (''Order''),* WC Docket No. 13–39, FCC 13–135, require covered providers to record, retain and report call completion data. Covered providers are providers of long-distance voice service that make the initial long-distance call path choice for more than 100,000 domestic retail subscriber lines. These providers generally must collect call completion data, retain such data for six months, and file quarterly reports with the Commission. The collection of this data will give the Commission the information it needs to investigate rural call completion problems. In addition to the recordkeeping, retention, and reporting obligations described above, the *Order* also requires certain providers to file a one-time letter in the docket explaining that they do not make the initial long-distance call path choice and identifying the long-distance provider or providers to which they hand off their end-user customers' calls. Finally, the *Order* encourages rural incumbent local exchange carriers to report quarterly on the number of incoming long-distance call attempts received, the number answered on its network, and the call answer rate calculation for each of the previous three months. The Commission subsequently made minor modifications to this information collection in the *Rural Call Completion Reconsideration Order (''Reconsideration Order''),* WC Docket No. 13–39, FCC 14–175. In the *Reconsideration Order,* the Commission granted USTelecom/ITTA's request that the reporting requirements exclude on-net intraLATA toll calls that are not handed off to unrelated carriers and are delivered directly to the terminating local exchange carrier or to the tandem that it subtends. The Commission found that this traffic comprises a small portion of on-net traffic (traffic that is not handed off to unrelated carriers) in general, that other on-net traffic will provide an adequate benchmark for off-net performance, and that the cost of applying the rules to this particular subset of traffic outweigh the benefits.

Gloria J. Miles,

Federal Register Liaison Officer.

[FR Doc. 2014–26990 Filed 11–13–14; 8:45 am]

BILLING CODE 6712–01–P

FEDERAL RESERVE SYSTEM

Change in Bank Control Notices; Acquisitions of Shares of a Bank or Bank Holding Company

The notificants listed below have applied under the Change in Bank Control Act (12 U.S.C. 1817(j)) and § 225.41 of the Board's Regulation Y (12 CFR 225.41) to acquire shares of a bank or bank holding company. The factors that are considered in acting on the notices are set forth in paragraph 7 of the Act (12 U.S.C. 1817(j)(7)).

The notices are available for immediate inspection at the Federal Reserve Bank indicated. The notices also will be available for inspection at the offices of the Board of Governors. Interested persons may express their views in writing to the Reserve Bank indicated for that notice or to the offices of the Board of Governors. Comments must be received not later than November 26, 2014.

A. *Federal Reserve Bank of Minneapolis* (Jacquelyn K. Brunmeier, Assistant Vice President) 90 Hennepin Avenue, Minneapolis, Minnesota 55480–0291:

1. *Waldo Jon Ackerman and Susan Dawn Ackerman,* both of Aurora, Colorado; to acquire voting shares of Olmsted Holding Corporation and thereby indirectly acquire voting shares of Olmsted National Bank, both of Rochester, Minnesota.

Board of Governors of the Federal Reserve System, November 7, 2014.

Michael J. Lewandowski,

Associate Secretary of the Board.

[FR Doc. 2014–26882 Filed 11–13–14; 8:45 am]

BILLING CODE 6210–01–P

FEDERAL RESERVE SYSTEM

Change in Bank Control Notices; Acquisitions of Shares of a Bank or Bank Holding Company

The notificants listed below have applied under the Change in Bank Control Act (12 U.S.C. 1817(j)) and § 225.41 of the Board's Regulation Y (12 CFR 225.41) to acquire shares of a bank or bank holding company. The factors that are considered in acting on the notices are set forth in paragraph 7 of the Act (12 U.S.C. 1817(j)(7)).

The notices are available for immediate inspection at the Federal Reserve Bank indicated. The notices also will be available for inspection at the offices of the Board of Governors. Interested persons may express their views in writing to the Reserve Bank indicated for that notice or to the offices of the Board of Governors. Comments must be received not later than November 26, 2014.

A. *Federal Reserve Bank of Chicago* (Colette A. Fried, Assistant Vice President) 230 South LaSalle Street, Chicago, Illinois 60690–1414:

1. Steven P. Malone Revocable Trust dated December 27, 2011, and Steven P. Malone, as trustee of the Steven P. Malone Revocable Trust, Apple River, Illinois, individually, and the Steven P. Malone Revocable Trust dated December 27, 2011, and Steven P. Malone, as trustee of the Steven P. Malone Revocable Trust, together as a group acting in concert with Lisa M. Byrne and Matthew P. Byrne, both of Aurora, Illinois, and Patrick I. Malone and Jean L. Malone, both of Apple River, Illinois, to retain voting shares of BSB Community Bancorporation, Inc., and thereby indirectly retain voting shares of Benton State Bank, both Benton, Wisconsin.

Board of Governors of the Federal Reserve System, November 7, 2014.

Michael J. Lewandowski,

Associate Secretary of the Board.

[FR Doc. 2014–26880 Filed 11–13–14; 8:45 am]

BILLING CODE 6210–01–P

FEDERAL RESERVE SYSTEM

Formations of, Acquisitions by, and Mergers of Bank Holding Companies

The companies listed in this notice have applied to the Board for approval, pursuant to the Bank Holding Company Act of 1956 (12 U.S.C. 1841 *et seq.*) (BHC Act), Regulation Y (12 CFR Part 225), and all other applicable statutes and regulations to become a bank holding company and/or to acquire the assets or the ownership of, control of, or the power to vote shares of a bank or bank holding company and all of the banks and nonbanking companies owned by the bank holding company, including the companies listed below.

The applications listed below, as well as other related filings required by the Board, are available for immediate inspection at the Federal Reserve Bank indicated. The applications will also be available for inspection at the offices of the Board of Governors. Interested persons may express their views in writing on the standards enumerated in the BHC Act (12 U.S.C. 1842(c)). If the proposal also involves the acquisition of a nonbanking company, the review also includes whether the acquisition of the nonbanking company complies with the standards in section 4 of the BHC Act (12 U.S.C. 1843). Unless otherwise noted, nonbanking activities will be conducted throughout the United States.

Unless otherwise noted, comments regarding each of these applications must be received at the Reserve Bank indicated or the offices of the Board of Governors not later than December 8, 2014.

A. Federal Reserve Bank of Richmond (Adam M. Drimer, Assistant Vice President) 701 East Byrd Street, Richmond, Virginia 23261–4528:

1. *First Capital Bancshares, Inc.,* Bennettsville, South Carolina (which proposes to relocate to Laurinburg, North Carolina); to become a bank holding company upon the relocation and conversion of First Capital Bank, Bennettsville, South Carolina, to a North Carolina chartered commercial bank.

B. Federal Reserve Bank of Minneapolis (Jacquelyn K. Brunmeier, Assistant Vice President) 90 Hennepin Avenue, Minneapolis, Minnesota 55480–0291:

1. *Deerwood Bancshares, Inc.,* Deerwood, Minnesota; to acquire 100 percent of the voting shares of American Bank of Saint Paul, Saint Paul, Minnesota.

Board of Governors of the Federal Reserve System, November 10, 2014.

Michael J. Lewandowski,

Associate Secretary of the Board.

[FR Doc. 2014–26975 Filed 11–13–14; 8:45 am]

BILLING CODE 6210–01–P

FEDERAL RESERVE SYSTEM

Formations of, Acquisitions by, and Mergers of Bank Holding Companies

The companies listed in this notice have applied to the Board for approval, pursuant to the Bank Holding Company Act of 1956 (12 U.S.C. 1841 *et seq.*) (BHC Act), Regulation Y (12 CFR Part 225), and all other applicable statutes and regulations to become a bank holding company and/or to acquire the assets or the ownership of, control of, or the power to vote shares of a bank or bank holding company and all of the banks and nonbanking companies owned by the bank holding company, including the companies listed below.

The applications listed below, as well as other related filings required by the Board, are available for immediate inspection at the Federal Reserve Bank indicated. The applications will also be available for inspection at the offices of the Board of Governors. Interested persons may express their views in writing on the standards enumerated in the BHC Act (12 U.S.C. 1842(c)). If the proposal also involves the acquisition of a nonbanking company, the review also includes whether the acquisition of the nonbanking company complies with the standards in section 4 of the BHC Act (12 U.S.C. 1843). Unless otherwise noted, nonbanking activities will be conducted throughout the United States.

Unless otherwise noted, comments regarding each of these applications must be received at the Reserve Bank indicated or the offices of the Board of Governors not later than December 10, 2014.

A. Federal Reserve Bank of Kansas City (Dennis Denney, Assistant Vice President) 1 Memorial Drive, Kansas City, Missouri 64198–0001:

1. *Blair Corporation,* Omaha, Nebraska; to become a bank holding company by acquiring 100 percent of the voting shares of Washington County Bank, Blair Nebraska.

2. *Danes Incorporated,* Omaha, Nebraska; to become a bank holding company by acquiring 100 percent of the voting shares of Shelby County State Bank, Harlan, Iowa.

3. *Red Oak Financial Corporation,* Omaha, Nebraska; to become a bank holding company by acquiring 100 percent of the voting shares of Houghton State Bank, Red Oak, Iowa.

4. *York Holdings, Inc.,* Omaha, Nebraska; to become a bank holding company by acquiring 100 percent of the voting shares of York State Bank, York, Nebraska.

Board of Governors of the Federal Reserve System, November 7, 2014.

Michael J. Lewandowski,

Associate Secretary of the Board.

[FR Doc. 2014–26878 Filed 11–13–14; 8:45 am]

BILLING CODE 6210–01–P

FEDERAL RESERVE SYSTEM

Notice of Proposals To Engage in or To Acquire Companies Engaged in Permissible Nonbanking Activities

The companies listed in this notice have given notice under section 4 of the Bank Holding Company Act (12 U.S.C. 1843) (BHC Act) and Regulation Y, (12 CFR Part 225) to engage *de novo,* or to acquire or control voting securities or assets of a company, including the companies listed below, that engages either directly or through a subsidiary or other company, in a nonbanking activity that is listed in § 225.28 of Regulation Y (12 CFR 225.28) or that the Board has determined by Order to be closely related to banking and permissible for bank holding companies. Unless otherwise noted, these activities will be conducted throughout the United States.

Each notice is available for inspection at the Federal Reserve Bank indicated. The notice also will be available for inspection at the offices of the Board of Governors. Interested persons may express their views in writing on the question whether the proposal complies with the standards of section 4 of the BHC Act.

Unless otherwise noted, comments regarding the applications must be received at the Reserve Bank indicated or the offices of the Board of Governors not later than December 10, 2014.

A. *Federal Reserve Bank of Richmond* (Adam M. Drimer, Assistant Vice President) 701 East Byrd Street, Richmond, Virginia 23261–4528:

1. *H Bancorp LLC,* Columbia, Maryland, to acquire additional voting shares of Bay Bancorp, Inc., Columbia, Maryland, and thereby indirectly acquire additional shares of Bay Bank, FSB, Lutherville, Maryland, and thereby engage in operating a savings association, pursuant to section 225.28(b)(4)(ii).

Board of Governors of the Federal Reserve System, November 7, 2014.

Michael J. Lewandowski,

Associate Secretary of the Board.

[FR Doc. 2014–26881 Filed 11–13–14; 8:45 am]

BILLING CODE 6210–01–P

FEDERAL TRADE COMMISSION

Agency Information Collection Activities; Proposed Collection; Comment Request

AGENCY: Federal Trade Commission (FTC or Commission).

ACTION: Notice.

SUMMARY: The information collection requirements described below will be submitted to the Office of Management and Budget (OMB) for review, as required by the Paperwork Reduction Act (PRA). The FTC seeks public comments on its proposal to extend for three years the current PRA clearance for information collection requirements pertaining to the Commission's administrative activities. That clearance expires on February 28, 2015, and consists of: (a) Applications to the Commission, including applications and notices contained in the Commission's Rules of Practice (primarily Parts I, II, and IV); (b) the FTC's consumer complaint systems; and (c) the FTC's program evaluation activities.

DATES: Comments must be received on or before January 13, 2015.

ADDRESSES: Interested parties may file a comment online or on paper by following the instructions in the Request for Comments part of the **SUPPLEMENTARY INFORMATION** section below. Write ''Administrative Activities: FTC File No. P911409'' on your comment, and file your comment online at *https://ftcpublic.commentworks.com/ftc/adminactivitiespra* by following the instructions on the web-based form. If you prefer to file your comment on paper, mail or deliver your comment to the following address: Federal Trade Commission, Office of the Secretary, 600 Pennsylvania Avenue NW., Suite CC–5610 (Annex J), Washington, DC 20580, or deliver your comment to the following address: Federal Trade Commission, Office of the Secretary, Constitution Center, 400 7th Street SW., 5th Floor, Suite 5610 (Annex J), Washington, DC 20024.

FOR FURTHER INFORMATION CONTACT: Requests for copies of the collection of information and supporting documentation should be addressed to Nicholas Mastrocinque (Nick M) and Ami Dziekan (Ami D), Bureau of Consumer Protection, Federal Trade Commission, Mail Code CC–9232, 600 Pennsylvania Avenue NW., Washington, DC 20580; Nick M: (202) 326–3188 and Ami D: (202) 326–2648.

SUPPLEMENTARY INFORMATION:

Proposed Information Collection Activities

Under the Paperwork Reduction Act (PRA), 44 U.S.C. 3501–3520, federal agencies must get OMB approval for each collection of information they conduct, sponsor, or require. ''Collection of information'' means agency requests or requirements to submit reports, keep records, or provide information to a third party. 44 U.S.C. 3502(3); 5 CFR 1320.3(c). As required by section 3506(c)(2)(A) of the PRA, the FTC is providing this opportunity for public comment before requesting that OMB extend the existing PRA clearance for the information collection requirements pertaining to the Commission's administrative activities (OMB Control Number 3084–0047).

The Commission's Administrative Activities clearance consists of: (a) Applications to the Commission, including applications and notices contained in the Commission's Rules of Practice (primarily Parts I, II, and IV); (b) the FTC's consumer complaint systems; and (c) FTC program evaluation activities.

The FTC invites comments on: (1) Whether the proposed collection of information is necessary for the proper performance of the functions of the agency, including whether the information will have practical utility; (2) the accuracy of the agency's estimate of the burden of the proposed collection of information, including the validity of the methodology and assumptions used; (3) ways to enhance the quality, utility, and clarity of the information to be collected; and (4) ways to minimize the burden of the collection of information on those who are to respond. All comments must be received on or before January 13, 2015.

Estimated annual hours burden: 223,101 hours (400 + 222,622 + 64 + 15).

(a) Applications to the Commission, including applications and notices supported pursuant to the Commission's Rules of Practice: 400 hours.

Most applications to the Commission generally fall within the ''law enforcement'' exception to the PRA and are mostly found in Part III (Rules of Practice for Adjudicative Proceedings) of the Commission's Rules of Practice. *See* 16 CFR 3.1–3.83. Nonetheless, there are various applications and notices to the Commission contained in other rules (generally in Parts I, II, and IV of the Commission's Rule of Practice). For example, staff estimates that the FTC annually receives approximately 15 requests for clearance submitted by former FTC employees in order to participate in certain matters and screening affidavits submitted by partners or legal or business associates of former employees pursuant to Rule 4.1, 16 CFR 4.1. There are also procedures set out in Rule 4.11(e) for agency review of outside requests for Commission employee testimony, through compulsory process or otherwise, in cases or matters to which the agency is not a party. Rule 4.11(e) requires that a person who seeks such

testimony submit a statement in support of the request. Staff estimates that agency personnel receive approximately 125 requests per year. Other types of applications and notices are either infrequent or difficult to quantify. Nonetheless, in order to cover any potential ''collection of information'' for which separate clearance has not been sought, staff conservatively projects the FTC will receive 200 applications or notices per year. Staff estimates each respondent will incur, on average, approximately 2 hours of burden to submit an application or notice, resulting in a cumulative annual total of 400 burden hours (200 applications or notices × 2 burden hours).

Annual cost burden:

Using the burden hours estimated above, staff estimates that the total annual labor cost, based on an estimated average of $115/hour for executives' and attorneys' wages, would be approximately $46,000 (400 hours × $115).[1] There are no capital, start-up, operation, maintenance, or other similar costs to respondents.

(b) Complaint Systems: 222,622 annual hours.

Consumer Response Center (CRC)

Consumers can submit complaints about fraud and other practices to the FTC's Consumer Response Center by telephone or through an online complaint form at the FTC's Web site. Telephone complaints and inquiries to the FTC are answered both by FTC staff and contractors. These telephone counselors ask for the same information that consumers would enter on the applicable forms available on the FTC's Web site. The FTC also hosts a second online complaint form called econsumer.gov. This form accepts cross-border complaints from consumers through the econsumer.gov Web site and transmits them into the Consumer Sentinel Network. For telephone inquiries and complaints, the FTC staff estimates that it takes 5.9 minutes per call to gather information, and an estimated 5.3 minutes for consumers to enter a complaint online. The burden estimate conservatively assumes that the entire phone call is devoted to collecting information from consumers, although frequently telephone counselors devote a portion of the call to providing requested information to consumers.

As of 2014, the FTC now supports web chat for its online complaint process. Web chat allows consumers to communicate in real time using an easily accessible web interface to obtain technical support for the online complaint process. This feature will enable the FTC to retain consumer complaints from consumers who might otherwise abandon the process. Staff estimates that it will take an average of 5 minutes per chat session to obtain the necessary technical support.

Complaints Concerning the National Do Not Call Registry

To receive complaints from consumers of possible violations of the rules governing the National Do Not Call Registry, 16 CFR 310.4(b), the FTC maintains both an online form and a toll free hotline with automated voice response system. Consumer complainants must provide the phone number that was called, whether the call was prerecorded, and the date and time of the call. They may also provide either the name or telephone number of the company about which they are complaining, their name and address so they can be contacted for additional information, as well as for a brief comment regarding their complaint. In addition, complainants have the option of answering three yes-or-no questions to help law enforcement investigating complaints. The FTC staff estimates that the time required of consumer complainants to the National Do Not Call Registry is 3 minutes for phone complaints and 2 minutes for online complaints.

Identity Theft

To handle complaints about identity theft, the FTC must obtain more detailed information than is required of other complainants. Identity theft complaints generally require more information (such as a description of actions complainants have taken with credit bureaus, companies, and law enforcement, and the identification of multiple suspects) than general consumer complaints and fraud complaints. FTC staff estimates that the online identity theft complaint form takes consumers up to 8.5 minutes to complete.

For consumers who call the CRC with an identity theft complaint, staff estimates that it will take 6.4 minutes per call to obtain complaint information. A substantial portion of identity theft-related calls typically consists of counseling consumers on other steps they should consider taking to obtain relief. The time needed for counseling is excluded from the estimate.

Surveys

Consumer customer satisfaction surveys give the agency information about the overall effectiveness and timeliness of the FTC call center and online complaint process. An entity called Customer Feedback Insights contacts subsets of consumers throughout the year with several preapproved questions to elicit information from consumers about the overall effectiveness of the phone complaint process. Current estimates are that each respondent will require 4.4 minutes to answer the questions during the phone survey and about 2.7 minutes for the online survey (approximately 20–30 seconds per question).

In addition, the FTC currently uses ForeSee, Inc. for online customer satisfaction surveys on ftccomplaintassistant.gov. It randomly selects consumers to take part in a brief survey to provide feedback about the Web site. Estimates relating to ForeSee surveys are included under ''Misc. and fraud-related consumer complaints (Web chat)'' in the table below.

The FTC also plans to send an electronic survey to all Consumer Sentinel Network users to identify areas where the system is satisfactory and where it can improve. Staff estimates the survey to not take more than 5 minutes to complete.

What follows are staff's estimates of burden for these various collections of information, including the surveys. The figures for the online forms and consumer hotlines are *an average of annualized volume* for the respective programs including both current and projected volumes over the three-year clearance period sought and the number of respondents for each activity has been rounded to the nearest thousand.

[1] Figures based on national median salaries, including bonuses and benefits, divided by a 2,080 hour work year (52 weeks × 40 hours/week), for a ''Managing Attorney,'' ''Attorney II,'' ''Attorney III,'' ''Attorney IV,'' and ''Attorney V'' at *www.salary.com.*

[2] This category includes online customer satisfaction surveys by ForeSee, Inc., for ftccomplaintassistant.gov.

Activity	Number of respondents	Number of minutes/ activity	Total hours
Misc. and fraud-related consumer complaints (phone)	367,000	5.9	36,088
Misc. and fraud-related consumer complaints (online)	221,000	5.3	19,522
Misc. and fraud-related consumer complaints (Web chat) [2]	31,200	5.0	2,600
Do-Not-Call related consumer complaints (phone)	627,000	3.0	31,350
Do-Not-Call related consumer complaints (online)	2,860,000	2.0	95,333
Identity theft complaints (phone)	224,000	6.4	23,893
Identity theft complaints (online)	88,000	8.5	12,467
Customer Satisfaction Questionnaire (phone)	8,000	4.4	587
Customer Satisfaction Questionnaire (online)	17,000	2.7	765
Consumer Sentinel Network Survey	200	5.0	17
Totals	3,855,400		222,622

Annual cost burden:

The cost per respondent should be negligible. Participation is voluntary and will not require any labor expenditures by respondents. There are no capital, start-up, operation, maintenance, or other similar costs to the respondents.

(c) Program Evaluations: 79 hours.

Review of Divestiture Orders—64 Hours

The Commission issues, on average, approximately 10–15 orders in merger cases per year that require divestitures. As a result of a 1999 study authorized by the Office of Management and Budget (OMB) and conducted by the staffs of the Bureau of Competition (BC) and the Bureau of Economics, as well as more recent experience, BC monitors these required divestitures by interviewing representatives of the Commission-approved buyers of the divested assets within the first year after the divestiture is completed.

BC staff interviews representatives of the buyers to ask whether all assets required to be divested were, in fact, divested; whether the buyer has used the divested assets to enter the market of concern to the Commission and, if so, the extent to which the buyer is participating in the market; whether the divestiture met the buyer's expectations; and whether the buyer believes the divestiture has been successful. In a few cases, BC staff may also interview monitor trustees, if appropriate. In all these interviews, staff seeks to learn about pricing and other basic facts regarding competition in the markets of concern to the FTC.

Participation by the buyers is voluntary. Each responding company designates the company representative most likely to have the necessary information; typically, a company executive and an attorney represent the company. Each interview takes less than one hour to complete. BC staff further estimates that it takes each participant no more than one hour to prepare for the interview. Staff conservatively estimates that, for each interview of the responding company, two individuals (a company executive and an attorney) will devote two hours (one hour preparing and one hour participating) each to responding to questions for a total of four hours. Interviews of monitor trustees typically involve only the monitor trustee and take approximately one hour to complete with no more than one hour to prepare for the interview. Assuming that staff evaluates approximately 15 divestitures per year during the three-year clearance period, the total hours burden for the responding companies will be approximately 60 hours per year (15 divestiture reviews × 4 hours for preparing and participating). Staff may include approximately 2 monitor trustee interviews a year, which would add at most 4 hours (2 interviews × 2 hours for preparing and participating.).

Annual cost burden:

Using the burden hours estimated above, staff estimates that the total annual labor cost, based on a conservative estimated average of $135/hour for executives' and attorneys' wages, would be approximately $8,640 (64 hours × $135).[3] There are no capital, start-up, operation, maintenance, or other similar costs to respondents.

Review of Competition Advocacy Program—15 Hours

The FTC's competition advocacy program draws on the Commission's expertise in competition and consumer protection matters to encourage state and federal legislators, agencies and regulatory officials, and courts to consider the effects of their decisions on competition and consumer welfare. The Commission and staff send approximately 20 letters to such decision makers annually regarding the likely effects of various bills and regulations.

In the past, the Office of Policy Planning (''OPP'') has evaluated the effectiveness of these advocacy comments by surveying comment recipients and other relevant decision makers. OPP intends to continue this evaluation by sending a paper or electronic questionnaire to relevant parties within a year after sending an advocacy. Most survey questions ask the respondent to agree or disagree with a statement concerning the advocacy comment that they received. Specifically, these questions ask about the consideration, content, influence, and public effect of our comments. The questionnaire also provides respondents with an opportunity to provide additional remarks regarding the comments they received, advocacy comments in general, and the outcome of the matter. These survey results are also included in the FTC's internal performance management indicators, and are used to guide the FTC's selection and prioritization of future competition advocacy opportunities.

OPP staff estimates that, on average, respondents will take 30 minutes or less to complete the questionnaire. OPP staff estimates that 15 minutes of administrative time will be necessary to prepare a survey for return via mail or email. Accordingly, staff estimates that each respondent will incur 45 minutes of burden, resulting in a cumulative total of 15 burden hours per year (45 minutes of burden per respondent × 20 respondents per year). OPP staff does not intend to conduct any follow-up activities that would involve the respondents' participation.

Annual cost burden:

OPP staff estimates a conservative hourly labor cost of $100 for the time of the survey participants (primarily state representatives and senators) and an hourly labor cost of $20 for administrative support time. Thus, staff estimates a total labor cost of $55 for

[3] *See* supra note 1 (attorney salary source data for ''Managing Attorney'').

each response (30 minutes of burden at $100 per hour plus 15 minutes of burden at $20 per hour). Assuming 20 respondents will complete the questionnaire on an annual basis, staff estimates the total annual labor costs will be approximately $1,100 ($55 per response × 20 respondents). There are no capital, start-up, operation, maintenance, or other similar costs to respondents.

Request for Comments

You can file a comment online or on paper. Write ''Administrative Activities: FTC File No. P911409'' on your comment. Your comment—including your name and your state—will be placed on the public record of this proceeding, including, to the extent practicable, on the public Commission Web site, at *http://www.ftc.gov/os/publiccomments.shtm.* As a matter of discretion, the Commission tries to remove individuals' home contact information from comments before placing them on the Commission Web site.

Because your comment will be made public, you are solely responsible for making sure that your comment does not include any sensitive personal information, like a Social Security number, date of birth, driver's license number or other state identification number or foreign country equivalent, passport number, financial account number, or credit or debit card number. You are also solely responsible for making sure that your any comment does not include sensitive health information, like medical records or other individually identifiable health information. In addition, do not include any ''[t]rade secret or any commercial or financial information which is . . . privileged or confidential,'' as discussed in Section 6(f) of the FTC Act, 15 U.S.C. 46(f), and FTC Rule 4.10(a)(2), 16 CFR 4.10(a)(2). In particular, do not include competitively sensitive information such as costs, sales statistics, inventories, formulas, patterns, devices, manufacturing processes, or customer names.

If you want the Commission to give your comment confidential treatment, you must file it in paper form, with a request for confidential treatment, and you must follow the procedure explained in FTC Rule 4.9(c), 16 CFR 4.9(c).[4] Your comment will be kept confidential only if the FTC General Counsel, in his or her sole discretion, grants your request in accordance with the law and the public interest.

Postal mail addressed to the Commission is subject to delay due to heightened security screening. As a result, the Commission encourages you to submit your comments online. To make sure that the Commission considers your online comment, you must file it at *https://ftcpublic.commentworks.com/ftc/adminactivitiespra* by following the instructions on the Web-based form. If this Notice appears at *http://www.regulations.gov,* you also may file a comment through that Web site.

If you file your comment on paper, write ''Administrative Activities: FTC File No. P911409'' on your comment and on the envelope, and mail or deliver it to the following address: Federal Trade Commission, Office of the Secretary, 600 Pennsylvania Avenue NW., Suite CC–5610 (Annex J), Washington, DC 20580, or deliver your comment to the following address: Federal Trade Commission, Office of the Secretary, Constitution Center, 400 7th Street SW., 5th Floor, Suite 5610 (Annex J), Washington, DC 20024. If possible, submit your paper comment to the Commission by courier or overnight service. The FTC Act and other laws that the Commission administers permit the collection of public comments to consider and use in this proceeding as appropriate. The Commission will consider all timely and responsive public comments that it receives on or before January 13, 2015. You can find more information, including routine uses permitted by the Privacy Act, in the Commission's privacy policy, at *http://www.ftc.gov/ftc/privacy.htm.*

Christian S. White,

Deputy General Counsel for Legal Counsel.

[FR Doc. 2014–27013 Filed 11–13–14; 8:45 am]

BILLING CODE 6750–01–P

[4] In particular, the written request for confidential treatment that accompanies the comment must include the factual and legal basis for the request, and must identify the specific portions of the comment to be withheld from the public record. See FTC Rule 4.9(c), 16 CFR 4.9(c).

DEPARTMENT OF DEFENSE

GENERAL SERVICES ADMINISTRATION

NATIONAL AERONAUTICS AND SPACE ADMINISTRATION

[OMB Control No. 9000–0182; Docket No. 2010–0079; Sequence 21]

Submission for OMB Review; Privacy Training

AGENCY: Department of Defense (DOD), General Services Administration (GSA), and National Aeronautics and Space Administration (NASA).

ACTION: Notice of request for public comments regarding an existing OMB information clearance.

SUMMARY: Under the provisions of the Paperwork Reduction Act, the Regulatory Secretariat Division will be submitting to the Office of Management and Budget (OMB) a request for approval of a previously approved information collection requirement regarding privacy training. An initial notice soliciting public comments on the information collection was published in the **Federal Register** at 76 FR 63896, on October 14, 2011, as part of a proposed rule under FAR case 2010–013. Two public comments were received on the information collection, and are addressed in the notice under, supplementary information. Comments on the rest of the proposed rule will be addressed with the issuance of the final rule.

DATES: Submit comments on or before December 15, 2014.

ADDRESSES: Submit comments identified by Information Collection 9000–0182, Privacy Training, by any of the following methods:

- Regulations.gov: *http://www.regulations.gov.* Submit comments via the Federal eRulemaking portal by searching the OMB control number 9000–0182. Select the link ''Comment Now'' that corresponds with ''Information Collection 9000–0182, Privacy Training''. Follow the instructions provided on the screen. Please include your name, company name (if any), and ''Information Collection 9000–0182, Privacy Training'' on your attached document.
- Fax: 202–501–4067.
- Mail: General Services Administration, Regulatory Secretariat Division (MVCB), 1800 F Street NW., Washington, DC 20405. ATTN: Hada Flowers/IC 9000–0182, Privacy Training.

Instructions: Please submit comments only and cite Information Collection 9000–0182, Privacy Training, in all correspondence related to this collection. All comments received will be posted without change to *http://www.regulations.gov,* including any personal and/or business confidential information provided.

FOR FURTHER INFORMATION CONTACT: Mr. Charles Gray, Procurement Analyst, Office of Governmentwide Acquisition Policy, at telephone 703–795–6328 or via email to *charles.gray@gsa.gov.*

SUPPLEMENTARY INFORMATION:

A. Purpose

The Privacy Act of 1974, (5 U.S.C. 552a) prescribes fair information

practices for how Federal agencies collect, maintain, use, and disseminate personal information. Consistent with provisions of the Privacy Act of 1974, contractors that design, develop, maintain, or operate a system of records on individuals; require access to a system of records; or handle personally identifiable information, are required to be properly trained on the compliance requirements, applicable laws, and appropriate safeguards for the security and confidentiality of personally identifiable information. The training documentation shall be maintained by contractors and provided to the Government upon request. It is anticipated that the Government would request documentation only rarely.

B. Analysis of Public Comments

Two respondents submitted public comments on the estimated annual burden. Analysis of the public comments for the proposed rule on areas other than the estimated annual burden will be addressed with the issuance of the final rule. The analysis of public comments on the estimated annual burden is summarized as follows:

Comments: Two respondents stated that the public's Paperwork Reduction Act estimated annual reporting burden was understated.

Response: The Paperwork Reduction Act, 44 U.S.C. chapter 35, addresses the Government's collection of information and the public's burden associated with any reporting or recordkeeping requirements of the information. The reporting burden will be minimal. Contractors will have to provide training documentation only rarely, *i.e.,* when there is an indication of non-compliance with the privacy training requirements and it is necessary to review documentation in order for the Government to ensure effective contractor management and oversight. The recordkeeping requirements are minor, and are not subject to specific formatting or template requirements. Contractors will have to maintain evidence of completed privacy training. Notwithstanding the minimum reporting and recordkeeping requirements, the estimated annual burden is increased.

C. Annual Reporting Burden

DoD, GSA, and NASA have increased the estimated annual burden from what was published in the **Federal Register** at 76 FR 63896, on October 14, 2011, as part of a proposed rule under FAR Case 2010–013, Privacy Training. The increase in the total burden is attributed to the clarification that the reporting requirement is applicable to commercial-item contracts. DoD, GSA, and NASA decided that exempting commercial-item contracts and subcontracts would exclude a significant portion of Government contracts that involve the design, development, operation, or maintenance of a system of records on individuals and would therefore diminish the effectiveness of the rule.

Therefore, DoD, GSA, and NASA estimate the annual burden associated with this information collection as follows:

Respondents: 21,025.
Responses per Respondent: 5.
Total Annual Responses: 105,125.
Hours per Response: .25.
Total Burden Hours: 26,281.

Obtaining Copies Of Proposals: Requesters may obtain a copy of the information collection documents from the General Services Administration, Regulatory Secretariat (MVCB), 1800 F Street NW., Washington, DC 20405, telephone 202–501–4755. Please cite OMB Control No. 9000–0182, Privacy Training, in all correspondence.

Dated: November 7, 2014.

Edward Loeb,

Acting Director, Office of Governmentwide Acquisition Policy, Office of Acquisition Policy, Office of Governmentwide Policy.

[FR Doc. 2014–26938 Filed 11–13–14; 8:45 am]

BILLING CODE 6820–EP–P

DEPARTMENT OF DEFENSE

GENERAL SERVICES ADMINISTRATION

NATIONAL AERONAUTICS AND SPACE ADMINISTRATION

[OMB Control No. 9000–0001; Docket No. 2014–0055; Sequence No. 18]

Submission for OMB Review; Affidavit of Individual Surety, Standard Form 28

AGENCY: Department of Defense (DOD), General Services Administration (GSA), and National Aeronautics and Space Administration (NASA).

ACTION: Notice of request for public comments regarding an extension to an existing OMB clearance.

SUMMARY: Under the provisions of the Paperwork Reduction Act of 1995 (44 U.S.C. Chapter 35), the Regulatory Secretariat Division (MVCB) will be submitting to the Office of Management and Budget (OMB) a request to review and approve an extension of a currently approved information collection requirement concerning Standard Form (SF) 28, Affidavit of Individual Surety. A notice was published in the **Federal Register** at 79 FR 43050 on July 24, 2014. Two comments were received.

DATES: Submit comments on or before December 15, 2014.

ADDRESSES: Submit comments identified by Information Collection 9000–0001 by any of the following methods:

- *Regulations.gov: http://www.regulations.gov.* Submit comments via the Federal eRulemaking portal by searching the OMB control number 9000–0001. Select the link ''Comment Now'' that corresponds with ''Information Collection 9000–0001, SF 28, Affidavit of Individual Surety''. Follow the instructions provided on the screen. Please include your name, company name (if any), and ''Information Collection 9000–0001 SF 28, Affidavit of Individual Surety'' on your attached document.
- *Fax:* 202–501–4067.
- *Mail:* General Services Administration, Regulatory Secretariat Division (MVCB), 1800 F Street NW., Washington, DC 20405. ATTN: Ms. Flowers/IC 9000–0001, SF 28, Affidavit of Individual Surety.

Instructions: Please submit comments only and cite Information Collection 9000–0001, in all correspondence related to this collection. All comments received will be posted without change to *http://www.regulations.gov,* including any personal and/or business confidential information provided.

FOR FURTHER INFORMATION CONTACT: Ms. Cecelia L. Davis, Procurement Analyst, Acquisition Policy Division, GSA, 202–219–0202 or email *Cecelia.davis@gsa.gov.*

SUPPLEMENTARY INFORMATION:

A. Purpose

The Affidavit of Individual Surety SF 28 is used by all executive agencies, including the Department of Defense, to obtain information from individuals wishing to serve as sureties to Government bonds. To qualify as a surety on a Government bond, the individual must show a net worth not less than the penal amount of the bond on the SF 28. It is an elective decision on the part of the maker to use individual sureties instead of other available sources of surety or sureties for Government bonds. We are not aware if other formats exist for the collection of this information.

The information on SF 28 is used to assist the contracting officer in determining the acceptability of individuals proposed as sureties.

B. Discussion and Analysis

The analysis of the public comment is summarized as follows:

Both commenters support the extension of this information collection. In addition to supporting the extension, both commenters suggested some revisions/enhancements to the current Standard Form 28.

Comments: One commenter stated that SF 28 does not achieve its intended purpose in assisting contracting officers in determining whether individuals proposed as sureties are financially sound with the resources to support the obligations pledged for a Federal construction contract. The commenter states that the SF 28 has not prevented individual sureties from pledging the same assets for multiple bonds and recommends that the SF 28 be enhanced to ensure that the assets pledged to the Federal government can be accessed if needed. The Federal government should require any assets pledge other than real estate be placed in escrow only in a Federal insured financial institution and that a copy of the escrow agreement be filed with the SF 28 that shows the Federal government would have unrestricted access if needed. In addition, SF 28 should include questions relating to the criminal background, debarments and cease and desist orders from the state insurance departments. The SF 28 should also specify documentation to demonstrate the value of the assets, verify that it has been pledged to the United States and is free of tax liens or other encumbrances.

The other commenter acknowledges that changes have been made in the past to strengthen the form but points out that the current SF 28 would benefit from greater specificity on the information required of individual sureties relating to the pledging of assets, especially information relating to assets other than real estate. Also, additional information should be provided on the SF 28 to assist contracting officers in their efforts to select an acceptable individual surety (such as disclosure of Federal tax liens against the individual surety and disclosure of personal insolvency proceedings).

Response: As in the past, these suggestions will be taken into consideration and if deemed warranted a FAR case will be opened to revise the standard form. At that time, the estimated total annual public hour and cost burden will be adjusted if necessary.

C. Annual Reporting Burden

Based on a comprehensive reassessment performed, this information collection resulted in no change in the total burden hours from the previous information collection that was published in the **Federal Register** at 76 FR 60050 on September 28, 2011. The previous assessment performed resulted in a change to the ''Response per Respondent'' and ''Hours per Response'' categories. The 1.43, responses per respondent, was lowered to 1. to adequately reflect this category. A respondent has to respond completely not partially when submitting this form. The ''Hours per Response'' category was decreased to .3 (18 minutes) from .4 (24 minutes) to reflect the benefits of being able to submit the required information electronically, as respondents no longer have to print and physically mail forms.

Respondents: 500.
Responses per Respondent: 1.
Total Responses: 500.
Hours per Response: 0.3.
Total Burden Hours: 150.
Obtaining Copies Of Proposals: Requesters may obtain a copy of the information collection documents from the General Services Administration, Regulatory Secretariat Division (MVCB), 1800 F Street NW., Washington, DC 20405, telephone 202–501–4755. Please cite OMB Control No. 9000–0001, SF 28, Affidavit of Individual Surety, in all correspondence.

Dated: November 7, 2014.

Edward Loeb,

Acting Director, Federal Acquisition Policy Division, Office of Government-wide Acquisition Policy, Office of Acquisition Policy, Office of Government-wide Policy.

[FR Doc. 2014–26936 Filed 11–13–14; 8:45 am]

BILLING CODE 6820–EP–P

DEPARTMENT OF DEFENSE

GENERAL SERVICES ADMINISTRATION

NATIONAL AERONAUTICS AND SPACE ADMINISTRATION

[OMB Control No. 9000–0047; Docket No. 2014–0055; Sequence 14]

Federal Acquisition Regulation; Submission to OMB for Review; Place of Performance

AGENCIES: Department of Defense (DOD), General Services Administration (GSA), and National Aeronautics and Space Administration (NASA).

ACTION: Notice of request for public comments regarding an extension to an existing OMB clearance.

SUMMARY: Under the provisions of the Paperwork Reduction Act (44 U.S.C. chapter 35), the Regulatory Secretariat Division (MVCB) will be submitting to the Office of Management and Budget (OMB) a request to review and approve an extension of a currently approved information collection requirement concerning place of performance. A notice was published in the **Federal Register** at 79 FR 41286 on July 15, 2014. There were two comments received.

DATES: Submit comments on or before December 15, 2014.

ADDRESSES: Submit comments identified by Information Collection 9000–0047, Place of Performance by any of the following methods:

- *Regulations.gov: http://www.regulations.gov.* Submit comments via the Federal eRulemaking portal by searching the OMB Control number 9000–0047. Select the link ''Comment Now'' that corresponds with ''Information Collection 9000–0047, Place of Performance''. Follow the instructions provided on the screen. Please include your name, company name (if any), and ''Information Collection 9000–0047 Place of Performance'' on your attached document.
- *Fax:* 202–501–4067.
- *Mail:* General Services Administration, Regulatory Secretariat Division (MVCB) 1800 F Street NW., Washington, DC 20405. ATTN: Ms. Hada Flowers/IC 9000–0047, Place of Performance.

Instructions: Please submit comments only and cite Information Collection 9000–0047 Place of Performance, in all correspondence related to this collection. All comments received will be posted without change to *http://www.regulations.gov,* including any personal and/or business confidential information provided.

FOR FURTHER INFORMATION CONTACT: Mr. Michael O. Jackson, Procurement Analyst, Acquisition Policy Division at 202–208–4949 or email *michaelo.jackson@gsa.gov.*

A. Purpose

The information relative to the place of performance and owner of plant or facility, if other than the prospective contractor, is a basic requirement when contracting for supplies or services (including construction). A prospective contractor must affirmatively demonstrate its responsibility. Hence, the Government must be apprised of this information prior to award. The contracting officer must know the place of performance and the owner of the

plant or facility to (1) determine bidder responsibility; (2) determine price reasonableness; (3) conduct plant or source inspections; and (4) determine whether the prospective contractor is a manufacturer or a regular dealer. The information is used to determine the prospective contractor's eligibility for awards and to assure proper preparation of the contract. Prospective contractors are only required to submit place of performance information on an exceptional basis; that is, whenever the place of performance for a specific solicitation is different from the address of the prospective contractor as indicated in the proposal.

B. Discussion and Analysis

One respondent submitted public comments on the extension of the previously approved information collection. The analysis of the public comments is summarized as follows:

Comment: The respondent commented that ''place of performance'' information is competitive data. The respondent expressed concern that the manufacturer of its supplies would be revealed to competitors if the information was provided to the contracting officer.

Response: The information relative to the place of performance and owner of plant or facility is instrumental in determining bidder responsibility, responsiveness, and price reasonableness. The information is used to determine the firm's eligibility for awards and to assure proper preparation of the contract.

Comment: The respondent stated that the ''place of performance'' field on the DD Form 1155 is mandatory throughout the Department of Defense (DoD) and recommended that it be required throughout the Federal government.

Response: This comment is outside the parameters of this information collection. The DD Form 1155 was developed by DoD for use by DoD contracting activities.

C. Annual Reporting Burden

Time required to read, prepare, and record information is estimated at 2.73 minutes per completion. The Federal Procurement Data System (FPDS) shows that for fiscal year 2013, there were 2,090,428 new actions (including contracts and orders, excluding modifications) for manufacturing in the United States. The 2,090,428 actions will be used as the new basis for total annual responses.

Respondents: *149,316.*
Responses per Respondent: *14.*
Total Responses: *2,090,428.*
Hours per Response: *.0455.*
Total Burden Hours: *95,114.*

D. Public Comments

Public comments are particularly invited on: Whether this collection of information is necessary for the proper performance of functions of the FAR, and whether it will have practical utility; whether our estimate of the public burden of this collection of information is accurate, and based on valid assumptions and methodology; and ways to enhance the quality, utility, and clarity of the information to be collected.

Obtaining Copies Of Proposals: Requesters may obtain a copy of the information collection documents from the General Services Administration, Regulatory Secretariat Division (MVCB), 1800 F Street NW., Washington, DC 20405 telephone 202–501–4755. Please cite OMB Control No. 9000–0047, Place of Performance, in all correspondence.

Dated: November 3, 2014.

Edward Loeb,

Acting Director, Federal Acquisition Policy Division, Office of Government-wide Acquisition Policy, Office of Acquisition Policy, Office of Government-wide Policy.

[FR Doc. 2014–26937 Filed 11–13–14; 8:45 am]

BILLING CODE 6820–EP–P

GENERAL SERVICES ADMINISTRATION

[Notice CPL–2014–02; Docket No. 2014–0002; Sequence 35]

GSA Labor-Management Relations Council Meeting

AGENCY: General Services Administration.

ACTION: Notice of meeting.

SUMMARY: The GSA Labor-Management Relations Council (GLMRC) plans to meet on Tuesday, December 2, 2014 and Wednesday, December 3, 2014. The meeting will start at 9:30 a.m. Eastern Standard Time on both days and will be held in Room 1034 of the GSA National Capitol Region Building, 301 7th Street SW., Washington, DC 20407. Interested parties should contact the GLMRC at *glmrc@gsa.gov* with any questions and to check for any meeting changes.

The Council is an advisory body composed of representatives of the Federal employee unions representing General Services Administration (GSA) employees and senior GSA officials. The Council was established consistent with Executive Order 13522, entitled, ''Creating Labor-Management Forums to Improve Delivery of Government Services'' which instructs Federal agencies to establish department or agency-level labor-management forums to help identify problems and propose solutions to better serve the public and Federal agency missions.

The Council is co-chaired by GSA's Chief Human Capitol Officer, together with two senior union officials from each of the two Federal employees' unions representing GSA employees.

At its meetings, the GLMRC works toward promoting cooperative and productive relationships between labor and management, providing employees through their union representatives with pre-decisional involvement in all workplace matters to the fullest extent practicable. As a part of this, the GLMRC advises the GSA administrator on innovative ways to improve delivery of services and products to the public while cutting costs and advancing employee interests. The meeting is expected to include discussion of the GLMRC's priorities for the coming year, performance management policy, and workforce mobility and telework.

The meetings are open to the public. In order to gain entry into the Federal building where the meeting is being held, public attendees who are Federal employees should bring their Federal employee identification cards, and members of the general public should bring their driver's license or a government-issued photo identification card. The manner and time prescribed for public comment at the meeting is limited, with such comment taking place at the end of the meeting. Extended public comment may be submitted to the GLMRC at *glmrc@gsa.gov* for its consideration prior to the meeting.

FOR FURTHER INFORMATION CONTACT: Mrs. Temple L. Wilson, GLMRC Designated Federal Officer (DFO), at the General Services Administration, OHRM, 1800 F Street NW., Washington, DC 20405; phone at 202–969–7110, or email at *glmrc@gsa.gov.*

Dated: November 10, 2014.

Temple L. Wilson,

GSA Labor-Management Relations Council, Designated Federal Officer.

[FR Doc. 2014–27031 Filed 11–13–14; 8:45 am]

BILLING CODE 6820–34–P

DEPARTMENT OF HEALTH AND HUMAN SERVICES

Centers for Disease Control and Prevention)

Subcommittee for Dose Reconstruction Reviews (SDRR), Advisory Board on Radiation and Worker Health (ABRWH or the Advisory Board), National Institute for Occupational Safety and Health (NIOSH)

In accordance with section 10(a)(2) of the Federal Advisory Committee Act (Pub. L. 92–463), the Centers for Disease Control and Prevention (CDC), announces the following meeting for the aforementioned subcommittee:

Time and Date: 10:30 a.m.–5:00 p.m. Eastern Time, December 8, 2014.

Place: Audio Conference Call via FTS Conferencing.

Status: Open to the public, but without a public comment period. The public is welcome to submit written comments in advance of the meeting, to the contact person below. Written comments received in advance of the meeting will be included in the official record of the meeting. The public is also welcome to listen to the meeting by joining the teleconference at the USA toll-free, dial-in number 1–866–659–0537 and the pass code is 9933701.

Background: The Advisory Board was established under the Energy Employees Occupational Illness Compensation Program Act of 2000 to advise the President on a variety of policy and technical functions required to implement and effectively manage the new compensation program. Key functions of the Advisory Board include providing advice on the development of probability of causation guidelines that have been promulgated by the Department of Health and Human Services (HHS) as a final rule; advice on methods of dose reconstruction, which have also been promulgated by HHS as a final rule; advice on the scientific validity and quality of dose estimation and reconstruction efforts being performed for purposes of the compensation program; and advice on petitions to add classes of workers to the Special Exposure Cohort.

In December 2000, the President delegated responsibility for funding, staffing, and operating the Advisory Board to HHS, which subsequently delegated this authority to CDC. NIOSH implements this responsibility for CDC. The charter was issued on August 3, 2001, renewed at appropriate intervals, and will expire on August 3, 2015.

Purpose: The Advisory Board is charged with (a) providing advice to the Secretary, HHS, on the development of guidelines under Executive Order 13179; (b) providing advice to the Secretary, HHS, on the scientific validity and quality of dose reconstruction efforts performed for this program; and (c) upon request by the Secretary, HHS, advise the Secretary on whether there is a class of employees at any Department of Energy facility who were exposed to radiation but for whom it is not feasible to estimate their radiation dose, and on whether there is reasonable likelihood that such radiation doses may have endangered the health of members of this class. The Subcommittee for Dose Reconstruction Reviews was established to aid the Advisory Board in carrying out its duty to advise the Secretary, HHS, on dose reconstruction.

Matters To Be Discussed: The agenda for the Subcommittee meeting includes the following dose reconstruction program quality management and assurance activities: Discussion of current findings from NIOSH and Advisory Board dose reconstruction blind reviews; discussion of dose reconstruction cases under review (cases involving Y–12, Oak Ridge National Laboratory, Lawrence Livermore National Laboratory, Simonds Saw and Steel, Weldon Spring, W.R. Grace, Westinghouse, International Minerals and Chemical (IMC) Corporation, Koppers Company, Bridgeport Brass, Uranium Mill in Monticello,); and preparation of the Advisory Board's next report to the Secretary, HHS, summarizing the results of completed dose reconstruction reviews.

The agenda is subject to change as priorities dictate.

Contact Person for More Information: Theodore Katz, Designated Federal Officer, NIOSH, CDC, 1600 Clifton Road, Mailstop E–20, Atlanta, Georgia 30333, Telephone (513) 533–6800, Toll Free 1(800)CDC–INFO, Email *ocas@cdc.gov.*

The Director, Management Analysis and Services Office, has been delegated the authority to sign **Federal Register** notices pertaining to announcements of meetings and other committee management activities, for both the Centers for Disease Control and Prevention and the Agency for Toxic Substances and Disease Registry.

Claudette Grant,

Acting Director, Management Analysis and Services Office, Centers for Disease Control and Prevention.

[FR Doc. 2014–26913 Filed 11–13–14; 8:45 am]

BILLING CODE 4163–19–P

DEPARTMENT OF HEALTH AND HUMAN SERVICES

Centers for Disease Control and Prevention

Board of Scientific Counselors, Office of Infectious Diseases (BSC, OID)

In accordance with section 10(a)(2) of the Federal Advisory Committee Act (Pub. L. 92–463), the Centers for Disease Control and Prevention (CDC), announces the following meeting of the aforementioned committee:

Time and Date: 8:00 a.m.–5:00 p.m., December 10, 2014.

Place: CDC, Global Communications Center, 1600 Clifton Road NE., Building 19, Auditorium B3, Atlanta, Georgia 30333.

Status: The meeting is open to the public, limited only by the space available.

Purpose: The BSC, OID, provides advice and guidance to the Secretary, Department of Health and Human Services; the Director, CDC; the Director, OID; and the Directors of the National Center for Immunization and Respiratory Diseases, the National Center for Emerging and Zoonotic Infectious Diseases, and the National Center for HIV/AIDS, Viral Hepatitis, STD, and TB Prevention, CDC, in the following areas: Strategies, goals, and priorities for programs; research within the national centers; and overall strategic direction and focus of OID and the national centers.

Matters To Be Discussed: The meeting will include reports from the BSC, OID working groups; brief updates on priorities/activities of CDC's infectious disease national centers; and a focused discussion on public health issues arising from long-term outbreak response efforts.

Agenda items are subject to change as priorities dictate.

Contact Person for More Information: Robin Moseley, M.A.T., Designated Federal Officer, OID, CDC, 1600 Clifton Road NE., Mailstop D10, Atlanta, Georgia 30333, Telephone: (404) 639–4461.

The Director, Management Analysis and Services Office has been delegated the authority to sign **Federal Register** notices pertaining to announcements of meetings and other committee management activities, for both the Centers for Disease Control and Prevention and the Agency for Toxic Substances and Disease Registry.

Claudette Grant,

Acting Director, Management Analysis and Services Office, Centers for Disease Control and Prevention.

[FR Doc. 2014–26912 Filed 11–13–14; 8:45 am]

BILLING CODE 4163–18–P

DEPARTMENT OF HEALTH AND HUMAN SERVICES

Centers for Medicare & Medicaid Services

[CMS–9087–N]

Medicare and Medicaid Programs; Quarterly Listing of Program Issuances—July Through September 2014

AGENCY: Centers for Medicare & Medicaid Services (CMS), HHS.

ACTION: Notice.

SUMMARY: This quarterly notice lists CMS manual instructions, substantive and interpretive regulations, and other **Federal Register** notices that were published from July through September 2014, relating to the Medicare and Medicaid programs and other programs administered by CMS.

FOR FURTHER INFORMATION CONTACT: It is possible that an interested party may need specific information and not be able to determine from the listed information whether the issuance or regulation would fulfill that need. Consequently, we are providing contact persons to answer general questions concerning each of the addenda published in this notice.

Addenda	Contact	Phone No.
I CMS Manual Instructions	Ismael Torres	(410) 786–1864
II Regulation Documents Published in the **Federal Register**	Terri Plumb	(410) 786–4481
III CMS Rulings	Tiffany Lafferty	(410) 786–7548
IV Medicare National Coverage Determinations	Wanda Belle	(410) 786–7491
V FDA-Approved Category B IDEs	John Manlove	(410) 786–6877
VI Collections of Information	Mitch Bryman	(410) 786–5258
VII Medicare-Approved Carotid Stent Facilities	Lori Ashby	(410) 786–6322
VIII American College of Cardiology-National Cardiovascular Data Registry Sites	Marie Casey, BSN, MPH	(410) 786–7861
IX Medicare's Active Coverage-Related Guidance Documents	JoAnna Baldwin	(410) 786–7205
X One-time Notices Regarding National Coverage Provisions	JoAnna Baldwin	(410) 786–7205
XI National Oncologic Positron Emission Tomography Registry Sites	Stuart Caplan, RN, MAS	(410) 786–8564
XII Medicare-Approved Ventricular Assist Device (Destination Therapy) Facilities	Marie Casey, BSN, MPH	(410) 786–7861
XIII Medicare-Approved Lung Volume Reduction Surgery Facilities	Marie Casey, BSN, MPH	(410) 786–7861
XIV Medicare-Approved Bariatric Surgery Facilities	Jamie Hermansen	(410) 786–2064
XV Fluorodeoxyglucose Positron Emission Tomography for Dementia Trials	Stuart Caplan, RN, MAS	(410) 786–8564
All Other Information	Annette Brewer	(410) 786–6580

I. Background

The Centers for Medicare & Medicaid Services (CMS) is responsible for administering the Medicare and Medicaid programs and coordination and oversight of private health insurance. Administration and oversight of these programs involves the following: (1) Furnishing information to Medicare and Medicaid beneficiaries, health care providers, and the public; and (2) maintaining effective communications with CMS regional offices, state governments, state Medicaid agencies, state survey agencies, various providers of health care, all Medicare contractors that process claims and pay bills, National Association of Insurance Commissioners (NAIC), health insurers, and other stakeholders. To implement the various statutes on which the programs are based, we issue regulations under the authority granted to the Secretary of the Department of Health and Human Services under sections 1102, 1871, 1902, and related provisions of the Social Security Act (the Act) and Public Health Service Act. We also issue various manuals, memoranda, and statements necessary to administer and oversee the programs efficiently.

Section 1871(c) of the Act requires that we publish a list of all Medicare manual instructions, interpretive rules, statements of policy, and guidelines of general applicability not issued as regulations at least every 3 months in the **Federal Register**.

II. Format for the Quarterly Issuance Notices

This quarterly notice provides only the specific updates that have occurred in the 3-month period along with a hyperlink to the full listing that is available on the CMS Web site or the appropriate data registries that are used as our resources. This information is the most current up-to-date information and will be available earlier than we publish our quarterly notice. We believe the Web site list provides more timely access for beneficiaries, providers, and suppliers. We also believe the Web site offers a more convenient tool for the public to find the full list of qualified providers for these specific services and offers more flexibility and ''real time'' accessibility. In addition, many of the Web sites have listservs; that is, the public can subscribe and receive immediate notification of any updates to the Web site. These listservs avoid the need to check the Web site, as notification of updates is automatic and sent to the subscriber as they occur. If assessing a Web site proves to be difficult, the contact person listed can provide information.

III. How To Use the Notice

This notice is organized into 15 addenda so that a reader may access the subjects published during the quarter covered by the notice to determine whether any are of particular interest. We expect this notice to be used in concert with previously published notices. Those unfamiliar with a description of our Medicare manuals should view the manuals at *http://www.cms.gov/manuals.*

Dated: November 7, 2014.

Kathleen Cantwell,

Director, Office of Strategic Operations and Regulatory Affairs.

BILLING CODE 4120–01–P

Publication Dates for the Previous Four Quarterly Notices

We publish this notice at the end of each quarter reflecting information released by CMS during the previous quarter. The publication dates of the previous four Quarterly Listing of Program Issuances notices are: November 8, 2013 (78 FR 67153), January 31, 2014 (79 FR 5419), April 25, 2014 (79 FR 22976) and July 25, 2014 (79 FR 43475). For the purposes of this quarterly notice, we are providing only the specific updates that have occurred in the 3-month period along with a hyperlink to the website to access this information and a contact person for questions or additional information.

Addendum I: Medicare and Medicaid Manual Instructions (July through September 2014)

The CMS Manual System is used by CMS program components, partners, providers, contractors, Medicare Advantage organizations, and State Survey Agencies to administer CMS programs. It offers day-to-day operating instructions, policies, and procedures based on statutes and regulations, guidelines, models, and directives. In 2003, we transformed the CMS Program Manuals into a web user-friendly presentation and renamed it the CMS Online Manual System.

How to Obtain Manuals

The Internet-only Manuals (IOMs) are a replica of the Agency's official record copy. Paper-based manuals are CMS manuals that were officially released in hardcopy. The majority of these manuals were transferred into the Internet-only manual (IOM) or retired. Pub 15-1, Pub 15-2 and Pub 45 are exceptions to this rule and are still active paper-based manuals. The remaining paper-based manuals are for reference purposes only. If you notice policy contained in the paper-based manuals that was not transferred to the IOM, send a message via the CMS Feedback tool.

Those wishing to subscribe to old versions of CMS manuals should contact the National Technical Information Service, Department of Commerce, 5301 Shawnee Road, Alexandria, VA 22312 Telephone (703-605-6050). You can download copies of the listed material free of charge at: http://cms.gov/manuals.

How to Review Transmittals or Program Memoranda

Those wishing to review transmittals and program memoranda can access this information at a local Federal Depository Library (FDL). Under the FDL program, government publications are sent to approximately 1,400 designated libraries throughout the United States. Some FDLs may have arrangements to transfer material to a local library not designated as an FDL. Contact any library to locate the nearest FDL. This information is available at http://www.gpo.gov/libraries/

In addition, individuals may contact regional depository libraries that receive and retain at least one copy of most federal government publications, either in printed or microfilm form, for use by the general public. These libraries provide reference services and interlibrary loans; however, they are not sales outlets. Individuals may obtain information about the location of the nearest regional depository library from any library. CMS publication and transmittal numbers are shown in the listing entitled Medicare and Medicaid Manual Instructions. To help FDLs locate the materials, use the CMS publication and transmittal numbers. For example, to find the Cardiac Rehabilitation Programs for Chronic Heart Failure use CMS-Pub. 100-03, Transmittal No. 171.

Addendum I lists a unique CMS transmittal number for each instruction in our manuals or program memoranda and its subject number. A transmittal may consist of a single or multiple instruction(s). Often, it is necessary to use information in a transmittal in conjunction with information currently in the manual. For the purposes of this quarterly notice, we list only the specific updates to the list of manual instructions that have occurred in the 3-month period. This information is available on our website at www.cms.gov/Manuals.

Transmittal Number	Manual/Subject/Publication Number
	Medicare General Information (CMS-Pub. 100-01)
87	Update to Pub. 100-01, Chapter 7 for Language-Only Changes for ICD10 Test Case Specification Standard
88	Rescinds/Replaces CR 7468 - Updated Instructions for the Change Request Implementation Report (CRIR) and Technical Direction Letter (TDL) Compliance Report (TCR) Sample Cover Letter/Attestation Statement CR Implementation Report (CRIR) Template TDL Compliance Report (TCR) Template Contractor Implementation of Change Requests and Compliance with Technical Direction Letters
	Medicare Benefit Policy (CMS-Pub. 100-02)
190	Beneficiary Signature Requirements for Ambulance Services
191	Cardiac Rehabilitation Programs for Chronic Heart Failure Cardiac Rehabilitation (CR) and Intensive Cardiac Rehabilitation (ICR) Services Furnished On or After January 1, 2010
192	Clarification of the Confined to the Home Definition in Chapter 15, Covered Medical and Other Health Services, of the Medicare Benefit Policy Manual

193	Cardiac Rehabilitation Programs for Chronic Heart Failure Determining Whether or Not the Beneficiary is at High Risk for Developing Colorectal Cancer Partial Hospitalization Services Coverage of Intravenous Immune Globulin for Treatment of Primary Immune Deficiency Diseases in the Home Coverage of Outpatient Rehabilitation Therapy Services (Physical Therapy, Occupational Therapy, and Speech-Language Pathology Services) Under Medical Insurance Documentation Requirements for Therapy Services Glaucoma Screening Admission Requirements
194	Pub. 100-02 Language-Only Update for ICD-10 Limitations for Coverage Partial Hospitalization Services Coverage of Intravenous Immune Globulin for Treatment of Primary Immune Deficiency Diseases in the Home Coverage of Outpatient Rehabilitation Therapy Services (Physical Therapy, Occupational Therapy, and Speech-Language Pathology Services Documentation Requirements for Therapy Services Glaucoma Screening Determining Whether or Not the Beneficiary is at High Risk for Developing Colorectal Cancer Screening Pap Smears Admission Requirements
195	Issued to a specific audience, not posted to Internet/Intranet due to Sensitivity of Instruction
Medicare National Coverage Determination (CMS-Pub. 100-03)	
170	National Coverage Determination (NCD) for Single Chamber and Dual Chamber Permanent Cardiac Pacemakers
171	Cardiac Rehabilitation Programs for Chronic Heart Failure
172	Ventricular Assist Devices for Bridge-to-Transplant and Destination Artificial Hearts and Related Devices (Various Effective Dates Below) Ventricular Assist Devices (Various Effective Dates Below) Therapy
173	Pub 100-03, Chapter 1, language-only update Foreword – Purpose for National Coverage Determinations (NCD) Manual Use of Visual Tests Prior to and General Anesthesia During Cataract Surgery Transcutaneous Electrical Nerve Stimulation (TENS) for Acute Post-Operative Pain Outpatient Hospital Pain Rehabilitation Programs Anesthesia in Cardiac Pacemaker Surgery Percutaneous Transluminal Angioplasty (PTA) (Various Effective Dates Below) Cardiac Pacemakers (Various Effective Dates) Cardiac Pacemaker Evaluation Services Transtelephonic Monitoring of Cardiac Pacemakers Electrocardiographic Services Cardiac Output Monitoring By Thoracic Electrical Bioimpedance (TEB) – Various Effective Dates Below Speech Generating Devices Cochlear Implantation (Effective April 4, 2005)
	Physician's Office Within an Institution - Coverage of Services and Supplies Incident to a Physician's Services Abarelix for the Treatment of Prostate Cancer (Effective March 15, 2005) Hydrophilic Contact Lens for Corneal Bandage Photodynamic Therapy Ocular Photodynamic Therapy (OPT) - Effective April 3, 2013) Photosensitive Drugs Verteporfin - Effective April 3, 2013 Hydrophilic Contact Lenses Laproscopic Cholecystectomy Certain Drugs Distributed by the National Cancer Institute Stem Cell Transplantation (Various Effective Dates Below Anticancer Chemotherapy for Colorectal Cancer (Effective January 28, 2005) Hospital and Skilled Nursing Facility Admission Diagnostic Procedures Erythropoiesis Stimulating Agents (ESAs) in Cancer and Related Neoplastic Conditions Inpatient Hospital Stays for the Treatment of Alcoholism Chemical Aversion Therapy for Treatment of Alcoholism Treatment of Drug Abuse (Chemical Dependency Withdrawal Treatments for Narcotic Addictions Laser Procedures Diathermy Treatment Lumbar Artificial Disc Replacement (LADR) (Effective August 14, 2007) Supplies Used in the Delivery of Transcutaneous Electrical Nerve Stimulation (TENS Induced Lesions of Nerve Tracts Electrical Nerve Stimulators and Neuromuscular Electrical Stimulation (NMES) Enteral and Parenteral Nutritional Therapy Nesiritide for Treatment of Heart Failure Patients (Effective March 2, 2006) Nebulized Beta Adrenergic Agonist Therapy for Lung Diseases – (Effective September 10, 2007) Screening PAP Smears and Pelvic Examinations for Early Detection of Cervical or Vaginal Cancer Computed Tomography (CT) Magnetic Resonance Imaging (MRI) (Various Effective Dates Below) Ultrasound Diagnostic Procedures (Effective May 22, 2007) FDG Positron Emission Tomography (PET) for Dementia and Neurodegenerative Diseases (Effective September 15, 2004) Positron Emission Tomography (PET) (FDG) for Oncologic Conditions Digital Subtraction Angiography (DSA) Single Photon Emission Computed Tomograph (SPECT) Percutaneous Image-Guided Breast Biopsy Sterilization Water Purification and Softening Systems Used in Conjunction with Home Dialysis Home Use of Oxygen Pulmonary Rehabilitation Services - (Effective September 25, 2007) Treatment of Psoriasis Routine Costs in Clinical Trials (Effective July 9, 2007)

	Electrical Stimulation (ES) and Electromagnetic Therapy for the Treatment of Wounds – (Effective July 1, 2004) Durable Medical Equipment Reference List (Effective May 5, 2005) Hospital Beds Infusion Pumps Obsolete or Unreliable Diagnostic Tests Intravenous Immune Globulin for the Treatment of Autoimmune Mucocutaneous Blistering Diseases
174	Screening for Hepatitis C Virus (HCV) in Adults
175	Intensive Cardiac Rehabilitation Program - Benson-Henry Institute Cardiac Wellness Program
Medicare Claims Processing (CMS-Pub. 100-04)	
2980	Issued to a specific audience, not posted to Internet/Intranet due to Confidentiality of Instruction
2981	Issued to a specific audience, not posted to Internet/Intranet due to Confidentiality of Instruction
2982	Issued to a specific audience, not posted to Internet/Intranet due to Confidentiality of Instruction
2983	Issued to a specific audience, not posted to Internet/Intranet due to Confidentiality of Instruction
2984	Beneficiary Signature Requirements for Ambulance Services Items 11a – 13 – Patient and Insured Information Signature on the Request for Payment by Someone Other Than the Patient
2985	Medicare Part A Skilled Nursing Facility (SNF) Prospective Payment System (PPS) Pricer Update FY 2015
2986	National Coverage Determination (NCD) for Single Chamber and Dual Chamber Permanent Cardiac Pacemakers
2987	Issued to a specific audience, not posted to Internet/Intranet due to Confidentiality of Instruction
2988	New Waived Tests
2989	Cardiac Rehabilitation Programs for Chronic Heart Failure Intensive Cardiac Rehabilitation Program Services Furnished On or After January 1, 2010 Cardiac Rehabilitation Program Services Furnished On or After January 1, 2010 Correct Place of Service (POS) Code for CR and ICR Services on Professional Claims Requirements for CR and ICR Services on Institutional Claims Edits for CR Services Exceeding 36 Sessions Cardiac Rehabilitation Programs, Intensive Cardiac Rehabilitation Programs, and Pulmonary Rehabilitation Programs
2990	October 2014 Quarterly Average Sales Price (ASP) Medicare Part B Drug Pricing Files and Revisions to Prior Quarterly Pricing Files
2991	October Quarterly Update to 2014 Annual Update of HCPCS Codes Used for Skilled Nursing Facility (SNF) Consolidated Billing (CB) Enforcement
2992	Issued to a specific audience, not posted to Internet/ Intranet due to Confidentiality of Instruction
2993	Update to Pub. 100-04, Chapter 20 to Provide Language-Only Changes for Updating ICD-10 and ASC X12

	Partial Month Stays For Capped Rental Equipment Completion of Certificate of Medical Necessity Forms HHA Recertification for Home Oxygen Therapy Billing/Claim Formats DME MACs Only - Appeals of Duplicate Claims DME MACs – Billing Procedures Related To Advanced Beneficiary Notice (ABN) Upgrades Providing Upgrades of DMEPOS Without Any Extra Charge Showing Whether Rented or Purchased Billing for Supplies and Drugs Related to the Effective Use of DME Institutional Provider Reporting of Service Units for DME and Supplies Billing for Total Parenteral Nutrition and Enteral Nutrition Furnished to Part B Inpatients Special Considerations for SNF Billing for TPN and EN Under Part B Billing for Splints and Casts CWF Crossover Editing for DMEPOS Claims During an Inpatient Stay DMEPOS Clinical Trials and Demonstrations
2994	Update to Pub. 100-04, Chapter 35 to Provide Language-Only Changes for Updating ASC X12
2995	Issued to a specific audience, not posted to Internet/Intranet due to Sensitivity of Instruction
2996	Remittance Advice Remark and Claims Adjustment Reason Code and Medicare Remit Easy Print and PC Print Update
2997	Update to Pub. 100-04, Chapter 12 to Provide Language-Only Changes for Updating ICD-10 and ASC X12
2998	Update to Pub. 100-04, Chapter 32 to Provide Language-Only Changes for Updating ICD-10 and ASC X12
2999	Update to Pub. 100-04, Chapter 38 to Provide Language-Only Changes for Updating ASC X12
3000	Update to Pub. 100-04, Chapter 09 to Provide Language-Only Changes for Updating ASC X12
3001	Adjustment to Systematic Validation of Payment Group Codes for Prospective Payment Systems (PPS) Based on Patient Assessments Systematic Validation of Claims Information Using Patient Assessments
3002	Issued to a specific audience, not posted to Internet/Intranet due to Confidentiality of Instruction
3003	Issued to a specific audience, not posted to Internet/Intranet due to Confidentiality of Instruction
3004	Issued to a specific audience, not posted to Internet/Intranet due to Sensitivity of Instruction
3005	Preventing Duplicate Payments When Overlapping Inpatient and Home Health Claims Are Received Out of Sequence
3006	Issued to a specific audience, not posted to Internet/Intranet due to Confidentiality of Instruction
3007	Issued to a specific audience, not posted to Internet/ Intranet due to Sensitivity of Instruction
3008	Issued to a specific audience, not posted to Internet/Intranet due to Confidentiality of Instruction
3009	Update to Pub. 100-04, Chapter 37 to Provide Language-Only Changes for Updating ASC X12

3010	Preventing Payment on Requests for Anticipated Payment (RAPs) When Home Health Beneficiaries are Enrolled in Medicare Advantage (MA) Plans Request for Anticipated Payment (RAP)
3011	October Quarterly Update for 2014 Durable Medical Equipment, Prosthetics, Orthotics, and Supplies (DMEPOS) Fee Schedule
3012	October 2014 Update of the Hospital Outpatient Prospective Payment System (OPPS)
3013	Issued to a specific audience, not posted to Internet/Intranet due to Confidentiality of Instruction
3014	Update to Pub. 100-04, Chapter 16 to Provide Language-Only Changes for Updating ICD-10, ASC X12, and Medicare Administrative Contractors (MAC) Implementation Determinations (NCDs) for Clinical Diagnostic Laboratory Services Electronic Claim Submission to A/B MACs (B) Hospital Billing Under Part B Hospital Laboratory Services Furnished to Nonhospital Patients Background Billing CLIA Number Submitted on Claims from Independent Labs Implementation and Updates of Negotiated National Coverage Paper Claim Submission to A/B MACs (B)
3015	Update to Pub. 100-04, Medicare Claims Processing Manual, Chapter 11 to Provide Language-Only Changes for Updating ICD-10 and ASC X12
3016	Two New "K" Codes for Prefabricated Single and Double Upright Knee Orthosis That Are Furnished Off-The-Shelf (OTS)
3017	Date Correction to Diagnosis Code Reporting on Religious Nonmedical Health Care Institution (RNHCI) Claims Required Data Elements on Claims for RNHCI Services
3018	October 2014 Integrated Outpatient Code Editor (I/OCE) Specifications Version 15.3
3019	Medicare Claims Processing Manual, Pub. 100-04, Chapter 4 Language Only Update for ICD-10, ASC X12, and Medicare Administrative Contractor (MAC) Implementation Line Item Date of Service Reporting for Partial Hospitalization General Rules for Reporting Outpatient Hospital Services Billing for Autologous Stem Cell Transplants Optional Method for Outpatient Services: Cost-Based Facility Services Plus 115 percent Fee Schedule Payment for Professional Services Billing and Payment in a Physician Scarcity Area (PSA) Identifying Primary Care Services Eligible for the PCIP Bill Review for Partial Hospitalization Services Received in Community Mental Health Centers (CMHC) Where to Report Modifiers on the Hospital Part B Claim
3020	Update to Pub. 100-04, Chapter 23 to Provide Language-Only Changes for Conversion to ICD-10 General Rules for Diagnosis Codes Reporting ICD Diagnosis and Procedure Codes Relationship of Diagnosis Codes and Date of Service Outpatient Claim Diagnosis Reporting ICD Procedure Code
	Coding for Outpatient Services and Physician Offices Inpatient Claim Diagnosis Reporting
3021	Update to Pub. 100-04, Chapter 10 to Provide Language-Only Changes for Updating ASC X12 Completion of Form CMS 1450 for Home Health Agency Billing Health Insurance Eligibility Query to Determine Episode Status
3022	Automation of the Request for Reopening Claims Process Application to Special Claim Types
3023	Update to Hospice Payment Rates, Hospice Cap, Hospice Wage Index, Quality Reporting Program and the Hospice Pricer for FY 2015
3024	Issued to a specific audience, not posted to Internet/ Intranet due to Confidentiality of Instruction
3025	October 2014 Update of the Ambulatory Surgical Center (ASC) Payment System
3026	Issued to a specific audience, not posted to Internet/ Intranet due to Confidentiality of Instruction
3027	Update to Pub. 100-04, Chapter 15 to Provide Language-Only Changes for Updating ICD-10, ASC X12, and Medicare Administrative Contractors (MAC) Implementation Medical Conditions List and Instructions General Billing Guidelines Coding Instructions for Paper and Electronic Claim Forms Fiscal Intermediary Shared System (FISS) Guidelines B MAC (A) Bill Processing Guidelines Effective April 1, 2002, as a Result of Fee Schedule Implementation Definitions
3028	Update to Pub. 100-04, Chapters 5 and 6 to Provide Language-Only Changes for Updating ICD-10, ASC X12, and Medicare Administrative Contractor (MAC) ImplementationOther Billing Situations Application of Financial Limitations Multiple Procedure Payment Reductions for Outpatient Rehabilitation Services Reporting of Service Units With HCPCS Coding Guidance for Certain CPT Codes - All Claims General Off-Site CORF Services Notifying Patient of Service Denial Billing for DME, Prosthetic and Orthotic Devices, and Surgical Dressings Addendum A - Chapter 5, Section 20.4 - Coding Guidance for Certain CPT Codes - All Claims Consolidated Billing Requirement for SNFs Billing SNF PPS Services Billing Procedures for Periodic Interim Payment (PIP) Method of Payment Total and Noncovered Charges Services in Excess of Covered Services Reporting Accommodations on Claims Bills with Covered and Noncovered Days Billing in Benefits Exhaust and No-Payment Situations Part B Outpatient Rehabilitation and Comprehensive Outpatient Rehabilitation Facility (CORF) Services – General

3029	Issued to a specific audience, not posted to Internet/ Intranet due to Confidentiality of Instruction
3030	Update to Pub. 100-04, Chapter 03 to Provide Language-Only Changes for Updating ICD-10 and ASC X12 Claim Formats Payment of Nonphysician Services for Inpatients Outliers Return Codes for Pricer Computer Programs Used to Support Prospective Payment System Medicare Code Editor (MCE) DRG Grouper Program Payment for Blood Clotting Factor Administered to Hemophilia Inpatients Payment for Post Hospital SNF Care Furnished by a CAH Noncovered Admission Followed by Covered Level of Care Outpatient Services Treated as Inpatient Services Adjustment Bills Tolerance Guidelines for Submitting Adjustment Requests Claim Change Reasons Swing-Bed Services Providers Using All Inclusive Rates for Inpatient Part A Charges The Standard Kidney Acquisition Charge Billing for Kidney Transplantation and Acquisition Services Heart Transplants Artificial Hearts and Related Devices Stem Cell Transplantation Allogeneic Stem Cell Transplantation Autologous Stem Cell Transplantation (AuSCT) Billing for Stem Cell Transplantation Billing for Liver Transplant and Acquisition Services Pancreas Transplants Kidney Transplants Intestinal and Multi-Visceral Transplants Billing for Abortion Services Lung Volume Reduction Surgery Nonemergency Part B Medical and Other Health Services Elections to Bill for Services Rendered Nonparticipating Hospitals Verification Process Used To Determine If the Inpatient Rehabilitation Facility Met The Classification Criteria Billing Requirements Under IRF PPS Remittance Advices Patient Classification System Processing Bills Between October 1, 2002 and the Implementation Date Billing Requirements Under LTCH PPS Billing Ancillary Services Under LTCH PPS Identifying Claims Eligible for the Add-On Payment for New Technology Reporting ECT Treatments Required Data Elements on Clams for RNHCI Services Recording Determinations of Excepted/Nonexcepted Care on Claim Records Annual Update Diagnosis Related Groups (DRGs) Adjustments Application of Code First Comorbidity Adjustments Source of Admission for IPF PPS Claims for Payment of ED Adjustment Electroconvulsive Therapy (ECT) Payment General Rules Completion of the Notice of Election for RNHCI
3031	Update to Pub. 100-04, Chapter 14 to Provide Language-Only Changes for Updating ASC X12 ASC Procedures for Completing the ASC X12 837 Professional Claim Format or the Form CMS-1500 Ambulatory Surgical Center Services on ASC List List of Covered Ambulatory Surgical Center Procedures Definition of Ambulatory Surgical Center (ASC)
3032	Hospice Manual Update for Diagnosis Reporting and Filing Hospice Notice of Election (NOE) and Termination or Revocation of Election. This CR rescinds and fully replaces CR 8777. Date Required on the Institutional Claim to Medicare Contractor Completing the Uniform (Institutional Provider) Bill (Form CMS 1450) for Hospice Election Notice of Election (NOE) - Form CMS 1450
3033	Influenza Vaccine Payment Allowances - Annual Update for 2014-2015 Season
3034	Update-Inpatient Psychiatric Facilities Prospective Payment System (IPF PPS) Fiscal Year (FY) 2015 Annual Update
3035	Annual Update of HCPCS Codes Used for Home Health Consolidated Billing Enforcement
3036	Issued to a specific audience, not posted to Internet/ Intranet due to Sensitivity of Instruction
3037	Healthcare Provider Taxonomy Codes (HPTC) Update
3038	Implement Operating Rules - Phase III ERA EFT: CORE 360 Uniform Use of Claim Adjustment Reason Codes (CARC) and Remittance Advice Remark Codes
3039	Inpatient Rehabilitation Facility (IRF) Annual Update: Prospective Payment System (PPS) Pricer Changes for FY 2015 Payment Provisions Under IRF PPS Quality Reporting Program
3040	Common Edits and Enhancements Modules (CEM) Code Set Update
3041	Issued to a specific audience, not posted to Internet/ Intranet due to Confidentiality of Instruction
3042	Issued to a specific audience, not posted to Internet/ Intranet due to Sensitivity of Instruction
3043	Claim Status Category and Claim Status Codes Update
3044	Quarterly Update to the Correct Coding Initiative (CCI) Edits, Version 21.0, Effective January 1, 2015
3045	Instructions for Downloading the Medicare ZIP Code File for January 2015
3046	October Update to the CY 2014 Medicare Physician Fee Schedule Database (MPFSDB)
3047	Reporting the Service Location National Provider Identifier (NPI) on Anti-Markup and Reference Laboratory Claims Payment Jurisdiction for Services Subject to the Anti-Markup Payment Limitation

	Diagnostic Tests Subject to the Anti-Markup Payment Limitation Billing for Diagnostic Tests (Other Than Clinical Diagnostic Laboratory Tests) Subject to the Anti-Markup Payment Limitation - Claims Conditional Data Element Requirements for A/B MACs and DMEMACs Carrier Specific Requirements for Certain Specialties/Services Paper Claim Submission To Carriers/B MAC Electronic Claim Submission to Carriers/B MAC Items 14-33 - Provider of Service or Supplier Information Payment to Physician or Other Supplier for Diagnostic Tests Subject to the Anti-Markup Payment Limitation - Claims Submitted to A/B MACs
3048	New Physician Specialty Code for Interventional Cardiology Non-Physician Specialty Codes Physician Specialty Codes
3049	Update to Pub. 100-04, Chapter 19 to Provide Language-Only Changes for ICD-10, ASC X12, and Medicare Administrative Contractors (MAC) Implementation A/B MAC (A) - Inpatient Acute Care - Medicare Part A - Claims Processing A/B MAC (A) Payment Policy and Claims Processing
3050	Medicare Summary Notices (MSNs), Remittance Advice Remark Codes (RARCs), and Claim Adjustment Reason Codes (CARCs) Healthcare Common Procedure Coding System (HCPCS), Applicable Diagnosis Codes, and Procedure Codes Billing Requirement for Extracorporeal Photopheresis
3051	Adjustment to Fiscal Intermediary Shared System (FISS) Consistency Edit to Implement National Uniform Billing Committee (NUBC) Revision to Occurrence Span Code (OSC) Definition for Code 72.
3052	Two New "K" Codes for Prefabricated Single and Double Upright Knee Orthosis That Are Furnished Off-The-Shelf (OTS)
3053	Billing Formats Data Elements Required on Claim for Monthly Capitation Payment Billing Billing for Enteral and Parenteral Nutritional Therapy as a Prosthetic Device Mammography Screening Hospital Services Calculation of the Basic Case-Mix Adjusted Composite Rate and the ESRD Prospective Payment System Rate In-Facility Dialysis Bill Processing Procedures Required Information for In-Facility Claims Paid Under the Composite Rate and the ESRD PPS Payment for Hemodialysis Sessions Ultrafiltration Lab Services Separately Billable ESRD Drugs Physician Billing Requirements to the A/B MAC (B) Other Information Required on the Form CMS-1500 for Epoetin Alfa (EPO Other Information Required on the Form CMS-1500 for Darbepoetin Alfa (Aranesp) General A/B MAC (A) Bill Processing Procedures for Method I Home Dialysis Services Physician's Services Furnished to a Dialysis Patient Away From Home or Usual Facility Physicians and Supplier (Nonfacility) Billing for ESRD Services/General Billing for Durable Medical Equipment (DME), Orthotic/Prosthetic Devices, and Supplies (including Surgical Dressings)
3054	Replacement Accessories and Supplies for External Ventricular Assist Devices or Any Ventricular Assist Device (VAD) Coding Requirements for Furnished Before May 1, 2008 Coding Requirements for Furnished After May 1, 2008 Ventricular Assist Devices Postcardiotomy Bridge-To -Transplantation (BTT) Destination Therapy (DT ther Artificial Hearts and Related Devices
3055	Annual Clotting Factor Furnishing Fee Update 2015 Clotting Factor Furnishing Fee
3056	Sample Collection Fee Adjustment for Clinical Laboratory Fee Schedule and Laboratory Services Coding Requirements for Specimen Collection Specimen Drawing for Dialysis Patients Independent Laboratory Specimen Drawing
3057	Ambulance Inflation Factor (AIF)
3058	Intensive Cardiac Rehabilitation Program Services Furnished On or After January 1, 2010 Cardiac Rehabilitation Program Services Furnished On or After January 1, 2010 Correct Place of Service (POS) Code for CR and ICR Services on Professional Claims Requirements for CR and ICR Services on Institutional Claims Edits for CR Services Exceeding 36 Sessions Cardiac Rehabilitation Programs, Intensive Cardiac Rehabilitation Programs, and Pulmonary Rehabilitation Programs
3059	Influenza Vaccine Payment Allowances - Annual Update for 2014-2015 Season
3060	Automation of the Request for Reopening Claims Process Application to Special Claim Types
3061	New Physician Specialty Code for Interventional Cardiology
3062	Issued to a specific audience, not posted to Internet/ Intranet due to Confidentiality of Instruction
3063	Common Working File (CWF) Edits Institutional Billing Requirements Professional Billing Requirements Claim Adjustment Reason Codes (CARCs), Remittance Advice Remark Codes (RARCs), Group Codes, and Medicare Summary Notice (MSN) Messages Screening for Hepatitis C Virus (HCV)
3064	October Update to the CY 2014 Medicare Physician Fee Schedule Database (MPFSDB)
3065	Billing for Cost Based Payment for Certified Registered Nurse Anesthetists (CRNA) Services Furnished by Outpatient Prospective Payment System (OPPS) Hospitals
3066	Fiscal Year (FY) 2015 Inpatient Prospective Payment System (IPPS) and

	Long Term Care Hospital (LTCH) PPS Changes
3067	Issued to a specific audience, not posted to Internet/ Intranet due to Confidentiality of Instruction
3068	Quarterly Update for the Durable Medical Equipment, Prosthetics, Orthotics Supplies (DMEPOS) Competitive Bidding Program (CBP) - January 2015
3069	Issued to a specific audience, not posted to Internet/ Intranet due to Confidentiality of Instruction
3070	New Waived Tests
3071	Manual Update to Clarify Claims Processing for Laboratory Services Travel Allowance Independent Laboratory Specimen Drawing Jurisdiction of Laboratory Claims
3072	January 2015 Quarterly Average Sales Price (ASP) Medicare Part B Drug Pricing Files and Revisions to Prior Quarterly Pricing Files
3073	New Physician Specialty Code for Interventional Cardiology Non-Physician Specialty Codes Physician Specialty Codes
3074	Issued to a specific audience, not posted to Internet/ Intranet due to Confidentiality of Instruction
3075	Date Correction to Diagnosis Code Reporting on Religious Nonmedical Health Care Institution (RNHCI) Claims
3076	Update to Pub. 100-04, Chapter 15 to Provide Language-Only Changes for Updating ICD-10, ASC X12, and Medicare Administrative Contractors (MAC) Implementation Medical Conditions List and Instructions Definitions Coding Instructions for Paper and Electronic Claim Forms Fiscal Intermediary Shared System (FISS) Guidelines A/B MAC (A) Bill Processing Guidelines Effective April 1, 2002, as a Result of Fee Schedule Implementation General Billing Guidelines
3077	Maintenance and Update of the Temporary Hook Created to Hold OPPS Claims that Include Certain Drug HCPCS Codes
3078	October 2014 Update of the Ambulatory Surgical Center (ASC) Payment System
3079	Issued to a specific audience, not posted to Internet/ Intranet due to Confidentiality of Instruction
3080	October 2014 Update of the Hospital Outpatient Prospective Payment System (OPPS)
3081	Update to Pub. 100-04, Chapter 23 to Provide Language-Only Changes for Conversion to ICD-10 Reporting ICD Diagnosis and Procedure Codes Relationship of Diagnosis Codes and Date of Service Inpatient Claim Diagnosis Reporting Outpatient Claim Diagnosis Reporting ICD Procedure Code Coding for Outpatient Services and Physician Offices General Rules for Diagnosis Codes
3082	Update-Inpatient Psychiatric Facilities Prospective Payment System (IPF PPS) Fiscal Year (FY) 2015
3083	Form CMS-1500 Instructions: Revised for Form Version 02/12 Items 14-33 Provider of Service or Supplier Information Items 1-11 Patient and Insured Information Items11a-13 Patient and Insured Information Health Insurance Claim Form CMS-1500
3084	Intensive Cardiac Rehabilitation Program - Benson-Henry Institute Cardiac Wellness
3085	Update to Pub. 100-04, Chapter 17 to Provide Language-Only Changes for Updating ICD-10 and ASC X1217/100/ The Competitive Acquisition Program (CAP) for Drugs and Biologicals Not Paid on a Cost or Prospective Payment Basis Submitting the Prescription Order Numbers and No Pay Modifiers Hospital Billing For Take-Home Drugs Hospital Outpatient Payment Under OPPS for New, Unclassified Drugs and Biologicals After FDA Approval But Before Assignment of a Product-Specific Drug or Biological HCPCS Code Claims Processing Rules for ESAs Administered to Cancer Patients for Anti-Anemia Therapy Intravenous Immune Globulin MSN/Remittance Messages for Immunosuppressive Drugs Requirements for Billing A/B MAC (A) for Immunosuppressive Drugs Billing and Payment Instructions for A/B MACs (A) MSN Denial/Claim Adjustment and Remark Messages for Anti-Emetic Drugs HCPCD Codes for Oral Anti-Emetic Drugs MSN/Claim Adjustment Message Codes for Oral Cancer Drug Denials Claims Processing Requirements - General Billing Drugs Electronically – NCPDP
3086	Foreword Formats for Submitting Claims to Electronic Submission Requirements HIPAA Standards for Claims Paper Claims Where to Purchase HIPAA Standard Implementation Guides Paper Formats for Institutional Claims Paper Formats for Professional and Supplier Claims Remittance Advices Payment Jurisdiction Among Local A/B MACs for Services Paid Under the Physician Fee Schedule and Anesthesia Services Claims Processing Instructions for Payment Jurisdiction Payment to Physician or Other Supplier for Diagnostic Tests Subject to the Anti- Markup Payment Limitation/ Claims Submitted to A/B MACs (B) Billing Procedures for Entities Qualified to Receive Payment on Basis of Reassignment/ for A/B MACs(B) Processed Claims Billing for Diagnostic Tests (Other Than Clinical Diagnostic Laboratory Tests) Subject to the Anti-Markup Payment Limitation/ Claims Submitted to AB/MACs(B) Billing Form as Request for Payment Beneficiary Request for Payment on Provider Record – Institutional Claims

	ASC X12 837 Institutional Claim Format Definition of a Claim for Payment Policy and Billing Instructions for Condition Code 44 General Information on Non-covered Charges on Institutional Claims Determining Start Date of Timely Filing Period -- Date of Service Form Prescribed by CMS Accordance with CMS Instructions Handling Incomplete or Invalid Submissions Claims Forms CMS 1490S and CMS-1450 Data Element Requirements Matrix Payer Only Codes Utilized by Medicare B MAC(B) Specific Requirements for Certain Specialties/ Services Consistency Edits for Institutional Claims Inpatient Part A Hospital Adjustment Bills Conditional Data Element Requirements for A/B MACs (B) and DME MACs
3087	2015 Annual Update for the Health Professional Shortage Area (HPSA) Bonus Payments
3088	2015 Annual Update of Healthcare Common Procedure Coding System (HCPCS) Codes for Skilled Nursing Facility (SNF) Consolidated Billing (CB) Update
3089	Issued to a specific audience, not posted to Internet/ Intranet due to Confidentiality of Instruction
3090	Ambulance Inflation Factor for CY 2015 and Productivity Adjustment
3091	Update to Pub. 100-04 Chapter 13 to Provide Language-Only Changes for Updating ICD-10 and ASC X12 ICD Coding for Diagnostic Tests A/B MAC (A)Payment for Low Osmolar Contrast Material (LOCM) (Radiology) Special Billing Instructions for RHCs and FQHCs Payment Requirements Medicare Summary Notices (MSN), Reason Codes, and Remark Codes Billing Instructions Coverage for PET Scans for Dementia and Neurodegenerative Diseases Place of Service (POS) Instructions for the Professional Component (PC or Interpretation) and the Technical Component (TC) of Diagnostic Tests Billing and Coverage Changes for PET Scans Billing and Coverage Changes for PET Scans for Cervical Cancer Effective for Services on or After November 10, 2009 Billing and Coverage Changes for PET (NaF-18) Scans to Identify Bone Metastasis of Cancer Effective for Claims With Dates of Services on or After February 26, 2010 EMC Formats Payment Methodology and HCPCS Coding Billing Requirements for CMS - Approved Clinical Trials and Coverage With Evidence Development Claims for PET Scans for Neurodegenerative Diseases, Previously Specified Cancer Indications, and All Other Cancer Indications Not Previously Specified
3092	Annual Medicare Physician Fee Schedule (MPFS) Files Delivery and Implementation
3093	Issued to a specific audience, not posted to Internet/ Intranet due to Sensitivity of Instruction
3094	Issued to a specific audience, not posted to Internet/ Intranet due to Sensitivity of Instruction
3095	Issued to a specific audience, not posted to Internet/ Intranet due to Confidentiality of Instruction
Medicare Secondary Payer (CMS-Pub. 100-05)	
101	Additional Electronic Correspondence Referral System (ECRS) Reason Codes Electronic Correspondence Referral System (ECRS) Electronic Correspondence Referral System (ECRS)
102	Issued to a specific audience, not posted to Internet/ Intranet due to Confidentiality of Instruction
103	Issued to a specific audience, not posted to Internet/ Intranet due to Confidentiality of Instruction
104	Issued to a specific audience, not posted to Internet/ Intranet due to Confidentiality of Instruction
105	Electronic Correspondence Referral System (ECRS) notification regarding Defense of Marriage Act (DOMA) and ICD-10 changes
106	Medicare Secondary Payer (MSP) Group Health Plan (GHP) Working Aged Policy -- Definition of "Spouse"; Same-Sex Marriages
Medicare Financial Management (CMS-Pub. 100-06)	
237	Notice of New Interest Rate for Medicare Overpayments and Underpayments - 4th Qtr. Notification for FY 2014
238	New Physician Specialty Code for Interventional Cardiology Exhibit Part D(1)/Claims Processing Timeliness - All Claims Classification of Claims for Counting Physician/Limited License Physician Specialty Codes Non-Physician Practitioner/Supplier Specialty Codes Part E/Interest Payment Data
239	Issued to a specific audience, not posted to Internet/ Intranet due to Confidentiality of Instruction
240	Transitioning Medicare Administrative Contractor (MAC) Workloads to the New Banking Contractor(s)
241	Recovery Audit Program Tracking Appeals and Reopenings Tracking Appeals and Reopenings
242	Medicare Financial Management Manual, Chapter 7, Internal Controls List of CMS Contractor Control Objectives OMB Circular A-123, Appendix A: Internal Controls Over Financial Reporting (ICOFR) Certification Statement CPIC - Report of Internal Control Deficiencies Statement on Standards for Attestation Engagements (SSAE) Number 16, Reporting on Controls at Service Providers Submission, Review, and Approval of Corrective Action Plans Corrective Action Plan (CAP) Reports CMS Finding Numbers Quarterly CAP Report Certification Package for Internal Controls (CPIC) Requirements
243	Notice of New Interest Rate for Medicare Overpayments and Underpayments - 1st Qtr Notification for FY 2015

Medicare State Operations Manual (CMS-Pub. 100-07)	
119	Rehabilitation Agencies - Fire Alarm Systems Standard: Disaster Plan Standard: Safety of Patients
120	Revisions to State Operations Manual (SOM) Chapter 5 Maximum Time Frames Related to the Federal Onsite Investigation of Complaints/Incidents Priority Definitions for Nursing Homes, Deemed and Non-Deemed Non-Long Term Care Providers/Suppliers, and EMTALA Immediate Jeopardy (for Nursing Homes, Deemed and Non-Deemed Non-Long Term Care Providers/Suppliers, and EMTALA) Non-Immediate Jeopardy – High Priority (for Nursing Homes and Deemed and Non-Deemed Non-Long Term Care Providers/Suppliers) Non-Immediate Jeopardy - Medium Priority (for Nursing Homes and Deemed and Non-Deemed Non-Long Term Care Providers/Suppliers) Non-Immediate Jeopardy – Low Priority (for Nursing Homes and Deemed and Non-Deemed Non-Long Term Care Providers/Suppliers) Administrative Review/Offsite Investigation (for Nursing Homes and Deemed and Non-Deemed Non-Long Term Care Providers/Suppliers) Referral – Immediate (for Nursing Homes, Deemed and Non-Deemed Non-Long Term Care Providers/Suppliers, and EMTALA) Referral – Other (for Nursing Homes, Deemed and Non-Deemed Non-Long Term Care Providers/Suppliers, and EMTALA) No Action Necessary (for Nursing Homes, Deemed and Non-Deemed Non-Long Term Care Providers/Suppliers, and EMTALA) Priority Assignment for Nursing Homes, Deemed and Non-Deemed Non-Long Term Care Providers/Suppliers, and EMTALA
121	Update to State Operations Manual (SOM), Publication 100-07, Chapter 3, to Provide Language-Only Changes for Updating ICD-10 Specific Criteria for Psychiatric Units/3106B1 - Patient Criteria
122	Revisions to State Operations Manual (SOM), Appendix A – Survey Protocol, Regulations and Interpretive Guidelines for Hospitals
123	Medicaid Provisions Clinical Laboratory Improvement Amendments (CLIA Look-Behind Authority Certification Related Functions of SA Accredited CLIA Laboratories CMS and AO Information Exchange Regarding Deemed Providers/Suppliers (Excluding CLIA) AO Reporting Requirements RO Requirements for Review of AO Reporting RO Reporting Requirements to AOs Assisting Applicant Providers and Suppliers Initial Certification "Kits Deemed Status Providers Suppliers, Excluding CLIA Provider-Based Determinations Medicare Health Care Provider Supplier Enrollment Approval or Denial Enrollment Denial Based on MAC Review Approval or Denial of Certification Based on Survey Findings Reconsideration of Denial
	Deemed Providers/Suppliers, Excluding CLIA Deemed Providers/Suppliers Except CLIA-Additional Information Surveys of New Providers and Suppliers Effective Date of Medicare Provider Agreement or Approval for Suppliers Reasonable Assurance Surveys Effective Date of Provider Agreement After Reasonable Assurance Non-deemed Hospitals Recertification of Non-deemed Hospitals Deemed Status: Hospitals Accredited by an Accrediting Organization with a CMS-approved Medicare Hospital or Medicare Psychiatric Hospital Accreditation Program Notice that a Participating Hospital Has Been Accredited and Recommended for Deemed Status Recertification Medicaid Provisions Clinical Laboratory Improvement Amendments (CLIA Look-Behind Authority Certification Related Functions of SA Accredited CLIA Laboratories CMS and AO Information Exchange Regarding Deemed Providers/Suppliers (Excluding CLIA) AO Reporting Requirements RO Requirements for Review of AO Reporting RO Reporting Requirements to AOs Assisting Applicant Providers and Suppliers Initial Certification "Kits Deemed Status Providers Suppliers, Excluding CLIA Provider-Based Determinations Medicare Health Care Provider Supplier Enrollment Approval or Denial Enrollment Denial Based on MAC Review Approval or Denial of Certification Based on Survey Findings Reconsideration of Denial Deemed Providers/Suppliers, Excluding CLIA Deemed Providers/Suppliers Except CLIA-Additional Information Surveys of New Providers and Suppliers Effective Date of Medicare Provider Agreement or Approval for Suppliers Reasonable Assurance Surveys Effective Date of Provider Agreement After Reasonable Assurance Non-deemed Hospitals Recertification of Non-deemed Hospitals Deemed Status: Hospitals Accredited by an Accrediting Organization with a CMS-approved Medicare Hospital or Medicare Psychiatric Hospital Accreditation Program Notice that a Participating Hospital Has Been Accredited and Recommended for Deemed Status Recertification Notification of Withdrawal or Loss of Accreditation Psychiatric Hospitals and Deemed Status

	Medicaid-Only Hospitals Initial Certification of Medicaid-Only Hospitals Certification Surveys of Medicaid-Only Hospitals Change in Certification Termination Complaint Investigation Determining Compliance with OASIS Transmission Requirements HHAs Seeking Initial Certification Participation through Deemed Status Exceptions to Demonstrating Compliance with OASIS Submission Requirements Prior to Approval Compliance Dates and PPS Instructions for Handling Medicare Patients in HHAs Seeking Initial Certification Instructions to New HHAs Concerning all Other Patients Survey Team Workload Completion Instructions for Certification and Transmittal, Form CMS-1539 RO Completion Instructions for Certification and Transmittal, Form CMS-1539, Items 19-32 Medicaid-Only Certification Change in Certification Medicaid NF and Medicaid Distinct Part NF Providers Seeking to Participate as Medicare SNF Provider Medicare- and Medicaid-Participating Hospitals Seeking to Become Medicaid-Only Hospital 2/2777D3-Medicaid-Only Hospitals Seeking to Participate in Medicare and Medicaid 2/2778-Objectives of RO Certification Review CMS Certification Numbers for Medicaid Providers Effective Date of Provider Agreement, Form CMS-1561, and Supplier Approval Compliance with All Federal Requirements All Health and Safety Standards Are Not Met on the Day of the Survey CMS Authority to Terminate Medicare and Medicaid Participation Termination of Title XIX-Only NFs, ICFs/IID, Hospitals and Psychiatric Hospitals Termination Action Based Upon Onsite Survey by RO, or Validation Survey of a Deemed Provider or Supplier by RO or SA Services for which Federal Financial Participation (FFP) May Be Temporarily Continued After Termination of a Medicaid Provider or Nonrenewal or Cancellation of an ICF/IID Provider Agreement Processing of Immediate Jeopardy Terminations Termination Procedures – Substantial Noncompliance; No Immediate Jeopardy (Medicare) Termination of Psychiatric Hospitals Termination Action Based on Onsite Survey of Medicare Provider or Supplier (Excluding SNFs) Conducted by RO Staff Plan of Correction (PoC) General Information on IPPS Exclusion Deemed Providers and Suppliers Validation Surveys - General Objective of Validation Surveys

	Representative Sample Validation Surveys of Deemed Providers Suppliers Substantial Allegation Validation Surveys of Deemed Providers Suppliers SA Preparation for Validation Survey Provider Supplier Authorization for Validation Survey Provider Supplier Refusal to Permit Validation Survey Forwarding Validation Survey Records to RO Actions Following Validation Survey Providers Suppliers Found in Compliance Following Validation Survey 3/3254B-Providers Suppliers Found Not in Compliance with One or More Conditions Following Validation Survey and Noncompliance Constitutes Immediate Jeopardy Condition-level Deficiencies That Do Not Pose Immediate Jeopardy Plans of Correction Termination or Other Adverse Accreditation Action for a Deemed Provider or Supplier Reinstatement to Accrediting Accreditation Organization Jurisdiction RO Provision of Information to Accrediting Organizations Psychiatric Hospitals and Deemed Status Medicaid-Only Hospitals Initial Certification of Medicaid-Only Hospitals Certification Surveys of Medicaid-Only Hospitals Change in Certification Termination Complaint Investigation Determining Compliance with OASIS Transmission Requirements HHAs Seeking Initial Certification Participation through Deemed Status Exceptions to Demonstrating Compliance with OASIS Submission Requirements Prior to Approval Compliance Dates and PPS Instructions for Handling Medicare Patients in HHAs Seeking Initial Certification Instructions to New HHAs Concerning all Other Patients Survey Team Workload Completion Instructions for Certification and Transmittal, Form CMS-1539 RO Completion Instructions for Certification and Transmittal, Form CMS-1539, Items 19 - 32 Medicaid-Only Certification Change in Certification Medicaid NF and Medicaid Distinct Part NF Providers Seeking to Participate as Medicare SNF Provider Medicare- and Medicaid-Participating Hospitals Seeking to Become Medicaid-Only Hospital 2/2777D3-Medicaid-Only Hospitals Seeking to Participate in Medicare and Medicaid 2/2778-Objectives of RO Certification Review CMS Certification Numbers for Medicaid Providers Effective Date of Provider Agreement, Form CMS-1561, and Supplier Approval Compliance with All Federal Requirements All Health and Safety Standards Are Not Met on the Day of the Survey

	CMS Authority to Terminate Medicare and Medicaid Participation Termination of Title XIX-Only NFs, ICFs/IID, Hospitals and Psychiatric Hospitals Termination Action Based Upon Onsite Survey by RO, or Validation Survey of a Deemed Provider or Supplier by RO or SA Services for which Federal Financial Participation (FFP) May Be Temporarily Continued After Termination of a Medicaid Provider or Nonrenewal or Cancellation of an ICF/IID Provider Agreement Processing of Immediate Jeopardy Terminations Termination Procedures – Substantial Noncompliance; No Immediate Jeopardy (Medicare) Termination of Psychiatric Hospitals Termination Action Based on Onsite Survey of Medicare Provider or Supplier (Excluding SNFs) Conducted by RO Staff Plan of Correction (PoC) General Information on IPPS Exclusion Deemed Providers and Suppliers Validation Surveys - General Objective of Validation Surveys Representative Sample Validation Surveys of Deemed Providers Suppliers Substantial Allegation Validation Surveys of Deemed Providers Suppliers SA Preparation for Validation Survey Provider Supplier Authorization for Validation Survey Provider Supplier Refusal to Permit Validation Survey Forwarding Validation Survey Records to RO Actions Following Validation Survey Providers Suppliers Found in Compliance Following Validation Survey 3/3254B-Providers Suppliers Found Not in Compliance with One or More Conditions Following Validation Survey and Noncompliance Constitutes Immediate Jeopardy Condition-level Deficiencies That Do Not Pose Immediate Jeopardy Plans of Correction Termination or Other Adverse Accreditation Action for a Deemed Provider or Supplier Reinstatement to Accrediting Accreditation Organization Jurisdiction RO Provision of Information to Accrediting Organizations
124	Revisions to State Operations Manual (SOM), Appendix W, Interpretive Guidelines for Critical Access Hospitals
Medicare Program Integrity (CMS-Pub. 100-08)	
526	Issued to a specific audience not posted to Internet/ Intranet due to Confidentiality of Instruction
527	Provider Notice on MAC Web Sites
528	Proof of Delivery--Supplier Documentation
529	Issued to a specific audience not posted to Internet/ Intranet due to Confidentiality of Instruction
530	Cardiac Rehabilitation Programs for Chronic Heart Failure Cardiac Rehabilitation (CR) and Intensive Cardiac Rehabilitation (ICR)
531	Issued to a specific audience not posted to Internet/ Intranet due to Confidentiality of Instruction
532	Incorporation of Various Form CMS-855 Processing Activities into Pub. 100-08, Program Integrity Manual (PIM), Chapter 15
533	Documentation for Durable Medical Equipment Prosthetics, Orthotics and Supplies (DMEPOS) Repair Claims
534	Claims that are related
535	Issued to a specific audience not posted to Internet/ Intranet due to Confidentiality of Instruction
536	Issued to a specific audience not posted to Internet/ Intranet due to Confidentiality of Instruction
537	Issued to a specific audience not posted to Internet/ Intranet due to Confidentiality of Instruction
538	Issued to a specific audience not posted to Internet/ Intranet due to Confidentiality of Instruction
539	Cardiac Rehabilitation Programs for Chronic Heart Failure Cardiac Rehabilitation (CR) and Intensive Cardiac Rehabilitation (ICR)
540	Claims that are related Requesting Additional Documentation During Prepayment and Postpayment Review
541	Claims that are related
542	Issued to a specific audience not posted to Internet/ Intranet due to Confidentiality of Instruction
543	Defending Medical Review Decisions at Administrative Law Judge (ALJ) Hearings The ALJ Hearing Collaboration Participation in the ALJ Hearing Party in the ALJ Hearing Defending Medical Review Decisions at Administrative Law Judge (ALJ) Hearings
544	Issued to a specific audience not posted to Internet/ Intranet due to Confidentiality of Instruction
545	Issued to a specific audience not posted to Internet/ Intranet due to Confidentiality of Instruction
Medicare Contractor Beneficiary and Provider Communications (CMS-Pub. 100-09)	
	None
Medicare Quality Improvement Organization (CMS- Pub. 100-10)	
18	Update to Pub. 100-10, Chapters 04 and 07 to Provide Language-Only Changes for Updating ICD-10
Medicare End Stage Renal Disease Network Organizations (CMS Pub 100-14)	
	None
Medicaid Program Integrity Disease Network Organizations (CMS Pub 100-15)	
	None
Medicare Managed Care (CMS-Pub. 100-16)	
	None
Medicare Business Partners Systems Security (CMS-Pub. 100-17)	
	None
Demonstrations (CMS-Pub. 100-19)	
	None
One Time Notification (CMS-Pub. 100-20)	
1395	Implementation of a Prospective Payment System (PPS) for Federally Qualified Health Centers (FQHCs)
1396	Clarification of Remittance Advice Code Combination Reports Generated by

	Shared Systems
1397	Consolidation of HIGLAS Organizations for a MAC - Organization Merges
1398	Issued to a specific audience not posted to Internet/ Intranet due to Confidentiality of Instructions
1399	Federally Qualified Health Centers Prospective Payment System- Recurring File Updates
1400	Issued to a specific audience not posted to Internet/ Intranet due to Sensitivity of Instructions
1401	Fee for Service Beneficiary Data Streamlining (FFS BDS) - Phase II - Auxiliary Data
1402	Issued to a specific audience not posted to Internet/ Intranet due to Sensitivity of Instructions
1403	Change in Applying Co-insurance and Lifetime Reserve (LTR) Amounts on Informational Only Claims with Condition Code (CC) 04
1404	Modify the Daily Common Working File (CWF) to Medicare Beneficiary Database (MBD) File to no longer include Preventive Healthcare Common Procedure Coding System (HCPCS) Codes that have been terminated.
1405	Diagnosis Reporting on Home Health Claims Coding System (HCPCS) Codes that have been terminated.
1406	Add Smoking Cessation Initial Session Date to the Common Working File (CWF) to Medicare Beneficiary Database (MBD) Extract File.
1407	Inpatient Hospital Claims and Medicare Secondary Payer (MSP) Claims with Medicare Coinsurance Days and/or Medicare Lifetime Reserve Days Occurring in the Seventh or More Calendar Years – Analysis and Design Only
1408	Fee for Service Beneficiary Data Streamlining (FFS BDS) Updates to Operational Issues
1409	IDR Shared Systems Daily Claims Feeds Expansion to Accommodate Ambulance Data Elements
1410	Instructions for Removing Logic Involving the IUR Implemented with CR8271
1411	Removal of User-Controlled Effective Date to Apply Therapy Caps to Critical Access Hospital (CAH) Claims
1412	Modifying FISS Part B Claims Overlap Edits related to CMS-1599-F
1413	Medicare Remit Easy Print (MREP) Enhancement
1414	Health Insurance Portability and Accountability Act (HIPAA) EDI Front End Updates for January 2015
1415	Issued to a specific audience not posted to Internet/ Intranet due to Sensitivity of Instructions
1416	Issued to a specific audience not posted to Internet/ Intranet due to Sensitivity of Instructions
1417	Issued to a specific audience not posted to Internet/ Intranet due to Sensitivity of Instructions
1418	Implement Operating Rules - Phase III ERA EFT: CORE 360 Uniform Use of Claim Adjustment Reason Codes (CARC) and Remittance Advice Remark Codes (RARC) Rule - Update from CAQH CORE - July 1, 2014 version 3.1.1
1419	Clarification of Remittance Advice Code Combination Reports Generated by Shared Systems
1420	DMEPOS Competitive Bidding Program (CBP): Correction to VMS

	Processing of Wheelchair Accessory Claims for Round 2
1421	Revised Modification to the Medically Unlikely Edit (MUE) Program
1422	Specific Modifiers for Distinct Procedural Services
1423	International Classification of Diseases, 10th Revision (ICD-10) Testing – Acknowledgement Testing with Providers
1424	IDR Shared Systems Daily Claims Feeds Expansion to Accommodate Medical Review Data Element
1425	Issued to a specific audience, not posted to Internet/Intranet due to a Sensitivity of Instruction
1426	Issued to a specific audience, not posted to Internet/Intranet due to a Sensitivity of Instruction
1427	Issued to a specific audience, not posted to Internet/Intranet due to a Sensitivity of Instruction
1428	Correction to Hospice Notice of Revocation Processing
1429	Fee for Service Beneficiary Data Streamlining (FFS BDS) Updates to Operational Issues
Medicare Quality Reporting Incentive Programs (CMS- Pub. 100-22)	
25	Issued to a specific audience not posted to Internet/ Intranet due to Confidentiality of Instructions
26	Issued to a specific audience not posted to Internet/ Intranet due to Confidentiality of Instructions
27	Issued to a specific audience not posted to Internet/ Intranet due to Confidentiality of Instructions
28	Issued to a specific audience not posted to Internet/ Intranet due to Confidentiality of Instructions
29	Issued to a specific audience not posted to Internet/ Intranet due to Confidentiality of Instructions
30	Issued to a specific audience not posted to Internet/ Intranet due to Confidentiality of Instructions
31	Language-Only Changes for Updating ICD-10 and ASC X12 Language in Pub 100-22, Chapters 1 and 2
32	Coding and Reporting Principles for Claims-Based Reporting
33	Issued to a specific audience not posted to Internet/ Intranet due to Confidentiality of Instructions
34	Issued to a specific audience not posted to Internet/ Intranet due to Confidentiality of Instructions

Addendum II: Regulation Documents Published in the Federal Register (July through September 2014)

Regulations and Notices

Regulations and notices are published in the daily **Federal Register**. To purchase individual copies or subscribe to the **Federal Register,** contact GPO at www.gpo.gov/fdsys. When ordering individual copies, it is necessary to cite either the date of publication or the volume number and page number.

The **Federal Register** is available as an online database through GPO Access. The online database is updated by 6 a.m. each day the **Federal Register** is published. The database includes both text and graphics from Volume 59, Number 1 (January 2, 1994) through the present date and can be accessed at http://www.gpoaccess.gov/fr/index.html. The following website http://www.archives.gov/federal-register/ provides information on how to access electronic editions, printed editions, and reference copies.

This information is available on our website at: http://www.cms.gov/quarterlyproviderupdates/downloads/Regs-3Q14QPU.pdf

For questions or additional information, contact Terri Plumb (410-786-4481).

Addendum III: CMS Rulings

CMS Rulings are decisions of the Administrator that serve as precedent final opinions and orders and statements of policy and interpretation. They provide clarification and interpretation of complex or ambiguous provisions of the law or regulations relating to Medicare, Medicaid, Utilization and Quality Control Peer Review, private health insurance, and related matters.

The rulings can be accessed at http://www.cms.gov/Regulations-and-Guidance/Guidance/Rulings. For questions or additional information, contact Tiffany Lafferty (410-786-7548).

Addendum IV: Medicare National Coverage Determinations (July through September 2014)

Addendum IV includes completed national coverage determinations (NCDs), or reconsiderations of completed NCDs, from the quarter covered by this notice. Completed decisions are identified by the section of the NCD Manual (NCDM) in which the decision appears, the title, the date the publication was issued, and the effective date of the decision. An NCD is a determination by the Secretary for whether or not a particular item or service is covered nationally under the Medicare Program (title XVIII of the Act), but does not include a determination of the code, if any, that is assigned to a particular covered item or service, or payment determination for a particular covered item or service. The entries below include information concerning completed decisions, as well as sections on program and decision memoranda, which also announce decisions or, in some cases, explain why it was not appropriate to issue an NCD. Information on completed decisions as well as pending decisions has also been posted on the CMS website. For the purposes of this quarterly notice, we list only the specific updates that have occurred in the 3-month period. This information is available at: www.cms.gov/medicare-coverage-database/. For questions or additional information, contact Wanda Belle (410-786-7491).

Title	NCDM Section	Transmittal Number	Issue Date	Effective Date
Cardiac Rehabilitation Programs - Chronic Heart Failure	NCD 20.10	R171	07/18/2014	02/18/2014
VADs for Bridge-to-Transplant/ Destination Therapy	NCD20.9	R172	08/29/2014	10/30/2013
Screening Hepatitis C Virus in Adults	NCD210.13	R174	09/05/2014	06/02/2014

Addendum V: FDA-Approved Category B Investigational Device Exemptions (IDEs) (July through September 2014)

Addendum V includes listings of the FDA-approved investigational device exemption (IDE) numbers that the FDA assigns. The listings are organized according to the categories to which the devices are assigned (that is, Category A or Category B), and identified by the IDE number. For the purposes of this quarterly notice, we list only the specific updates to the Category B IDEs as of the ending date of the period covered by this notice and a contact person for questions or additional information. For questions or additional information, contact John Manlove (410-786-6877).

Under the Food, Drug, and Cosmetic Act (21 U.S.C. 360c) devices fall into one of three classes. To assist CMS under this categorization process, the FDA assigns one of two categories to each FDA-approved investigational device exemption (IDE). Category A refers to experimental IDEs, and Category B refers to non-experimental IDEs. To obtain more information about the classes or categories, please refer to the notice published in the April 21, 1997 **Federal Register** (62 FR 19328).

IDE	Device	Start Date
G140004	INFUSE Bone Graft	07/02/2014
G140016	Veniti Vici Venous Stet System 12mm x 60mm x 100cm, 12mm x 90mm x 100cm, 12mm x 120mm x 100cm, 14mm x 60mm x 100cm, 14mm x 60mm x 100cm, 14mm x 120mm x 100cm, 16mm x 60mm x 100cm, 16mm x 90mm x 100cm, 16mm x 120mm x 100cm	07/02/2014

G140121	DLBCL IHC Classification PARHMDX Assay	07/03/2014
G140106	TEOSYAL RHA Ultradeep (TPUL)	07/09/2014
G140108	Repair of Complex Abdominal Aortic Aneurysms Using Custom Made Device (CMD)	07/16/2014
G140110	Ancora LLC Interbody Fusion Device	07/14/2014
G140111	TransMedics Organ Care System-Heart; TransMedics Organ Care System Heart Console; TransMedics OCS Heart Perfusion Set; TransMedics OCS Heart Perfusion Module; TransMedics OCS Heart Solution Set	07/23/2014
G140113	THORATEC HEARTMATE III LEFT VENTRICULAR ASSIST SYSTEM (LVAS)	07/24/2014
G140114	VizAblate System	07/25/2014
G140116	Apollo Onyx Delivery Micro Catheter	07/25/2014
G140117	Protocol 2013-0232: Pilot Study of Robotic-Assisted Harvest Of The Latissimus Dorsi Muscles	07/31/2014
G140090	Lotus Valve System	08/01/2014
G140123	miraDry System	08/07/2014
G140079	Therakos Cellex Photopheresis System	08/07/2014
G140124	Abbott Sensor Based Glucose Monitoring System - Personal and Pro	08/08/2014
G140132	Low Dose External Beam Irradiation	08/15/2014
G140131	Heterotopic Implantatin of The Edwards-Sapien XT Transcatheter Valve in The Inferiro Vena Cava For The Treatment of Severe Tricuspid Regurgitation (Hover) Trial	08/20/2014
G140103	Boston Scientific Precision Plus Spinal Cord Stimulator System with Artisan Epidural Array	08/22/2014
G140135	NovoTTF-100A System	08/22/2014
G140138	LifeStream Balloon Expandable Vascular Covered Stent	08/27/2014
G140145	Barostim NEO Implantable Pulse Generator (IPG) Model 2102, Barostim NEO Carotid Sinus Lead (CSL) Model 1036 and 1037, Programmer System Model 9010	08/28/2014
G140139	Dako PD-L1 22C3 pharmDx kit	08/28/2014
G140140	Spincology Interbody Fusion System (SIFS)	08/28/2014
G140141	Turbo-Elite RX Laser Atherectomy Catheters 410-154, 4140159, 417-156, 420-159; Turbo-Elite OTW Laser Artherectomy Catheters 410-150, 414-152, 420-006, 423-001, 425-011	08/28/2014
G140136	The Mitral Trial	09/04/2014
G140037	Extremity Exsanguination Device (EED)	09/05/2014
G130154	Exatherm-TBH	09/05/2014
G130282	Samfilcon A Soft (hydrophilic) Contact Lens	09/05/2014
G140149	Bipolar-VT: Bipolar Catheter Ablation	09/08/2014
G140152	Novilase System	09/10/2014
G140098	Tablo Hemodialysis System	09/11/2014
G140153	High-Resolution Microendoscopy (HRME) in patients with adenocarcinoma in-situ (AIS) of the cervix	09/12/2014
G140155	EPI Procolon	09/17/2014
G140157	Glucoclear System	09/19/2014
G140159	St. Jude Medical Multiprogram Stimulator (MTS) System	09/19/2014

Addendum VI: Approval Numbers for Collections of Information (July through September 2014)

All approval numbers are available to the public at Reginfo.gov. Under the review process, approved information collection requests are assigned OMB control numbers. A single control number may apply to several related information collections. This information is available at www.reginfo.gov/public/do/PRAMain. For questions or additional information, contact Mitch Bryman (410-786-5258).

Addendum VII: Medicare-Approved Carotid Stent Facilities, (July through September 2014)

Addendum VII includes listings of Medicare-approved carotid stent facilities. All facilities listed meet CMS standards for performing carotid artery stenting for high risk patients. On March 17, 2005, we issued our decision memorandum on carotid artery stenting. We determined that carotid artery stenting with embolic protection is reasonable and necessary only if performed in facilities that have been determined to be competent in performing the evaluation, procedure, and follow-up necessary to ensure optimal patient outcomes. We have created a list of minimum standards for facilities modeled in part on professional society statements on competency. All facilities must at least meet our standards in order to receive coverage for carotid artery stenting for high risk patients. For the purposes of this quarterly notice, we are providing only the specific updates that have occurred in the 3-month period. This information is available at: http://www.cms.gov/MedicareApprovedFacilitie/CASF/list.asp#TopOfPage For questions or additional information, contact Lori Ashby (410-786-6322).

Facility	Provider Number	Effective Date	State
The following facilities are new listings for this quarter.			
Kearney Regional Medical Center 804 22nd Avenue Kearney, NE 68845	1265877567	06/24/2014	NE
St. David's Round Rock Medical Center 2400 Round Rock Avenue Round Rock, TX 78681	450718	09/24/2014	TX
Editorial changes (in bold) for this quarter.			
Memorial Hospital of Tampa 2901 Swann Avenue Tampa FL 33609-4057	**1871935072**	07/15/2011	FL
FROM: University Hospital **TO: UC Medical Center** 234 Goodman Street Cincinnati, OH 45219-2364	360003	10/11/2005	OH

Facility	Provider Number	Effective Date	State
FROM: St. John's Regional Medical Center **TO: Mercy Hospital Joplin** **2817 St. John's Boulevard Joplin, MO 64804**	260001	04/19/2005	MO

Addendum VIII: American College of Cardiology's National Cardiovascular Data Registry Sites (July through September 2014)

Addendum VIII includes a list of the American College of Cardiology's National Cardiovascular Data Registry Sites. We cover implantable cardioverter defibrillators (ICDs) for certain clinical indications, as long as information about the procedures is reported to a central registry. Detailed descriptions of the covered indications are available in the NCD. In January 2005, CMS established the ICD Abstraction Tool through the Quality Network Exchange (QNet) as a temporary data collection mechanism. On October 27, 2005, CMS announced that the American College of Cardiology's National Cardiovascular Data Registry (ACC-NCDR) ICD Registry satisfies the data reporting requirements in the NCD. Hospitals needed to transition to the ACC-NCDR ICD Registry by April 2006.

Effective January 27, 2005, to obtain reimbursement, Medicare NCD policy requires that providers implanting ICDs for primary prevention clinical indications (that is, patients without a history of cardiac arrest or spontaneous arrhythmia) report data on each primary prevention ICD procedure. Details of the clinical indications that are covered by Medicare and their respective data reporting requirements are available in the Medicare NCD Manual, which is on the CMS website at http://www.cms.hhs.gov/Manuals/IOM/itemdetail.asp?filterType=none&filterByDID=99&sortByDID=1&sortOrder=ascending&itemID=CMS014961

A provider can use either of two mechanisms to satisfy the data reporting requirement. Patients may be enrolled either in an Investigational Device Exemption trial studying ICDs as identified by the FDA or in the ACC-NCDR ICD registry. Therefore, for a beneficiary to receive a Medicare-covered ICD implantation for primary prevention, the beneficiary must receive the scan in a facility that participates in the ACC-NCDR ICD registry. The entire list of facilities that participate in the ACC-NCDR ICD registry can be found at www.ncdr.com/webncdr/common

For the purposes of this quarterly notice, we are providing only the specific updates that have occurred in the 3-month period. This information is available by accessing our website and clicking on the link for the American College of Cardiology's National Cardiovascular Data Registry at: www.ncdr.com/webncdr/common. For questions or additional information, contact Marie Casey, BSN, MPH (410-786-7861).

Facility	City	State
The following facilities are new listings for this quarter.		
Baptist Health Medical Center	North Little Rock	AR
Centinela Hospital Medical Center	Inglewood	CA
Providence Saint John's Health Center	Santa Monica	CA
Interfaith Medical Center	Brooklyn	NY
Putnam Community Medical Center	Palatka	FL
Kearney Regional Medical Center	Kearney	NE
Oak Bend Medical Center	Richmond	TX
West Valley Medical Center	Caldwell	ID
Texas Regional Medical Center at Sunnyvale	Sunnyvale	TX
Banner Ogallala Community Hospital	Ogallala	NE
Pinnacle Health System: West Shore Hospital	Harrisburg	PA
Emanuel Medical Center	Turlock	CA
Huntsville Memorial Hospital	Huntsville	TX
Kaiser Foundation Hospital-Santa Rosa	Santa Rosa	CA
Weirton Medical Center	Weirton	WV
Scott & White HealthCare-Round Rock	Round Rock	TX
Meadowview Regional Medical Center LLC	Maysville	KY
Beloit Memorial Hospital	Beloit	WI
Connecticut Children's Medical Center	Hartford	CT
SSM Cardinal Glennon Children's Medical	St. Louis	MO
Campbell County Memorial	Gillette	WY
Scott & White Hospital - College Station	College Station	TX
Guadalupe Regional Medical Center	Seguin	TX

Addendum IX: Active CMS Coverage-Related Guidance Documents (July through September 2014)

There were no CMS coverage-related guidance documents published in the July through September 2014 quarter. To obtain the document, visit the CMS coverage website at http://www.cms.gov/medicare-coverage-database/details/medicare-coverage-document-details.aspx?MCDId=23. For questions or additional information, contact JoAnna Baldwin (410-786-7205).

Addendum X: List of Special One-Time Notices Regarding National Coverage Provisions (July through September 2014)

There were no special one-time notices regarding national coverage provisions published in the July through September 2014 quarter.

This information is available at www.cms.hhs.gov/coverage. For questions or additional information, contact JoAnna Baldwin (410 786 7205).

Addendum XI: National Oncologic PET Registry (NOPR) (July through September 2014)

Addendum XI includes a listing of National Oncologic Positron Emission Tomography Registry (NOPR) sites. We cover positron emission tomography (PET) scans for particular oncologic indications when they are performed in a facility that participates in the NOPR.

In January 2005, we issued our decision memorandum on **positron emission tomography** (PET) scans, which stated that CMS would cover PET scans for particular oncologic indications, as long as they were performed in the context of a clinical study. We have since recognized the National Oncologic PET Registry as one of these clinical studies. Therefore, in order for a beneficiary to receive a Medicare-covered PET scan, the beneficiary must receive the scan in a facility that participates in the registry. There were no additions, deletions, or editorial changes to the listing of National Oncologic Positron Emission Tomography Registry (NOPR) in the July through September 2014 quarter. This information is available at http://www.cms.gov/MedicareApprovedFacilitie/NOPR/list.asp#TopOfPage. For questions or additional information, contact Stuart Caplan, RN, MAS (410-786-8564).

Addendum XII: Medicare-Approved Ventricular Assist Device (Destination Therapy) Facilities (July through September 2014)

Addendum XII includes a listing of Medicare-approved facilities that receive coverage for ventricular assist devices (VADs) used as destination therapy. All facilities were required to meet our standards in order to receive coverage for VADs implanted as destination therapy. On October 1, 2003, we issued our decision memorandum on VADs for the clinical indication of destination therapy. We determined that VADs used as destination therapy are reasonable and necessary only if performed in facilities that have been determined to have the experience and infrastructure to ensure optimal patient outcomes. We established facility standards and an application process. All facilities were required to meet our standards in order to receive coverage for VADs implanted as destination therapy.

For the purposes of this quarterly notice, we are providing only the specific updates that have occurred to the list of Medicare-approved facilities that meet our standards in the 3-month period. This information is available at http://www.cms.gov/MedicareApprovedFacilitie/VAD/list.asp#TopOfPage. For questions or additional information, contact Marie Casey, BSN, MPH (410-786-7861).

Facility	Provider Number	Date Approved	State
The following facilities are new listings for this quarter.			
Memorial Regional Hospital 3501 Johnson Street Hollywood, FL 33021	10-0038	8/20/2014	FL
PeaceHealth Medical Center 101 West 8th Avenue Spokane, WA 99220	50-0030	9/17/2014	WA

Addendum XIII: Lung Volume Reduction Surgery (LVRS) (July through September 2014)

Addendum XIII includes a listing of Medicare-approved facilities that are eligible to receive coverage for lung volume reduction surgery. Until May 17, 2007, facilities that participated in the National Emphysema Treatment Trial were also eligible to receive coverage. The following three types of facilities are eligible for reimbursement for Lung Volume Reduction Surgery (LVRS):

- National Emphysema Treatment Trial (NETT) approved (Beginning 05/07/2007, these will no longer automatically qualify and can qualify only with the other programs);
- Credentialed by the Joint Commission (formerly, the Joint Commision on Accreditation of Healthcare Organizations (JCAHO)) under their Disease Specific Certification Program for LVRS; and
- Medicare approved for lung transplants.

Only the first two types are in the list. There were no updates to the listing of facilities for lung volume reduction surgery published in the July through September 2014 quarter. This information is available at www.cms.gov/MedicareApprovedFacilitie/LVRS/list.asp#TopOfPage. For questions or additional information, contact Marie Casey, BSN, MPH (410-786-7861).

Addendum XIV: Medicare-Approved Bariatric Surgery Facilities (July through September 2014)

Addendum XIV includes a listing of Medicare-approved facilities that meet minimum standards for facilities modeled in part on professional society statements on competency. All facilities must meet our standards in order to receive coverage for bariatric surgery procedures. On February 21,

2006, we issued our decision memorandum on bariatric surgery procedures. We determined that bariatric surgical procedures are reasonable and necessary for Medicare beneficiaries who have a body-mass index (BMI) greater than or equal to 35, have at least one co-morbidity related to obesity and have been previously unsuccessful with medical treatment for obesity. This decision also stipulated that covered bariatric surgery procedures are reasonable and necessary only when performed at facilities that are: (1) certified by the American College of Surgeons (ACS) as a Level 1 Bariatric Surgery Center (program standards and requirements in effect on February 15, 2006); or (2) certified by the American Society for Bariatric Surgery (ASBS) as a Bariatric Surgery Center of Excellence (BSCOE) (program standards and requirements in effect on February 15, 2006).

There were no additions, deletions, or editorial changes to Medicare-approved facilities that meet CMS's minimum facility standards for bariatric surgery that have been certified by ACS and/or ASMBS in the July through September 2014 period. This information is available at www.cms.gov/MedicareApprovedFacilitie/BSF/list.asp#TopOfPage. For questions or additional information, contact Jamie Hermansen (410-786-2064).

Addendum XV: FDG-PET for Dementia and Neurodegenerative Diseases Clinical Trials (July through September 2014)

There were no FDG-PET for Dementia and Neurodegenerative Diseases Clinical Trials published in the July through September 2014 quarter.

This information is available on our website at www.cms.gov/MedicareApprovedFacilitie/PETDT/list.asp#TopOfPage. For questions or additional information, contact Stuart Caplan, RN, MAS (410-786-8564).

[FR Doc. 2014–26989 Filed 11–13–14; 8:45 am]

BILLING CODE 4120–01–C

DEPARTMENT OF HEALTH AND HUMAN SERVICES

Centers for Medicare & Medicaid Services

[CMS–6063–N]

Medicare Program; Prior Authorization of Repetitive Scheduled Nonemergent Ambulance Transports

AGENCY: Centers for Medicare & Medicaid Services (CMS), HHS.

ACTION: Notice.

SUMMARY: This notice announces a 3-year Medicare Prior Authorization model for repetitive scheduled nonemergent ambulance transport in the states of New Jersey, Pennsylvania, and South Carolina where there have been high incidences of improper payments for these services.

DATES: This model will begin on December 1, 2014 in South Carolina, New Jersey, and Pennsylvania.

FOR FURTHER INFORMATION CONTACT: Angela Gaston, (410) 786–7409. Questions regarding the Medicare Prior Authorization Model for Repetitive Scheduled Nonemergent Ambulance Transport should be sent to *AmbulancePA@cms.hhs.gov.*

SUPPLEMENTARY INFORMATION:

I. Background

Medicare covers ambulance services, including air ambulance (fixed wing and rotary wing) services, when furnished to a beneficiary whose medical condition is such that other means of transportation are contraindicated. The beneficiary's condition must require both the ambulance transportation itself and the level of service provided in order for the billed service to be considered medically necessary.

Nonemergent transportation by ambulance is appropriate if either—(1) the beneficiary is bed-confined and it is documented that the beneficiary's condition is such that other methods of transportation are contraindicated; or (2) the beneficiary's medical condition, regardless of bed confinement, is such that transportation by ambulance is medically required. Thus, bed confinement is not the sole criterion in determining the medical necessity of nonemergent ambulance transportation; rather, it is one factor that is considered in medical necessity determinations.[1]

A repetitive ambulance service is defined as medically necessary ambulance transportation that is furnished in 3 round trips or more times during a 10-day period, or at least once per week for at least 3 weeks.[2] Repetitive ambulance services are often needed by beneficiaries receiving dialysis, wound care, or cancer treatment.

Medicare may cover repetitive, scheduled, nonemergent transportation by ambulance if—(1) the medical necessity requirements described previously are met; and (2) the ambulance provider/supplier, before furnishing the service to the beneficiary, obtains a written order from the beneficiary's attending physician certifying that the medical necessity requirements are met (see 42 CFR 410.40(d)(1) and (2)).[3]

In addition to the medical necessity requirements, the service must meet all other Medicare coverage and payment requirements, including requirements relating to the origin and destination of the transportation, vehicle and staff, and billing and reporting. Additional information about Medicare coverage of ambulance services can be found in 42 CFR 410.40, 410.41, and in the Medicare Benefit Policy Manual, Chapter 10, at *http://www.cms.gov/Regulations-and-Guidance/Guidance/Manuals/downloads/bp102c10.pdf.*

According to a study published by the Government Accountability Office in October 2012, entitled ''Costs and Medicare Margins Varied Widely; Transports of Beneficiaries Have Increased'', the number of Basic Life Support (BLS) nonemergent transports for Medicare fee-for-service beneficiaries increased by 59 percent from 2004 to 2010. A similar finding published by the Department of Health and Human Services Office of Inspector General in a 2006 study, entitled ''Medicare Payments for Ambulance Transports'', indicated a 20 percent nationwide improper payment rate for nonemergent ambulance transport. Likewise, in June 2013, the Medicare Payment Advisory Commission published a report[4] that included an analysis of nonemergent ambulance transports to dialysis facilities and found that, during the 5-year period between 2007 and 2011, the volume of transports to and from a dialysis facility increased 20 percent, more than twice the rate of all other ambulance transports combined.

Section 1115A of the Act authorizes the Secretary to test innovative payment and service delivery models to reduce program expenditures, while preserving or enhancing the quality of care furnished to Medicare, Medicaid and Children's Health Insurance Program beneficiaries.

Section 1115A(d)(1) of the Act authorizes the Secretary to waive such requirements of Titles XI and XVIII and of sections 1902(a)(1), 1902(a)(13), and 1903(m)(2)(A)(iii) of the Act as may be necessary solely for purposes of carrying out section 1115A of the Act with respect to testing models described in section 1115A(b) of the Act. For these models, consistent with this standard, we will waive such provisions of sections 1834(a)(15) and 1869(h) of the Act that limit our ability to conduct prior authorization. While these provisions are specific to durable medical equipment and physician services, we will waive any portion of these sections as well as any portion of 42 CFR 410.20(d), which implements section 1869(h) of the Act, that could be construed to limit our ability to conduct prior authorization. We have determined that the implementation of this model does not require the waiver of any fraud and abuse law, including sections 1128A, 1128B, and 1877 of the Act. Thus, providers and suppliers affected by this model must comply with all applicable fraud and abuse laws.

II. Provisions of the Notice

We plan to implement a 3-year Medicare Prior Authorization process for repetitive scheduled nonemergent ambulance transport rendered by ambulance providers/suppliers garaged in 3 states (New Jersey, Pennsylvania, and South Carolina). These states were selected as the initial states for the model because of their high utilization and improper payment rates for these services. The model will begin in on December 1, 2014, in South Carolina, New Jersey, and Pennsylvania.

We plan to test whether prior authorization helps reduce expenditures, while maintaining or improving quality of care, using a model that would establish a prior authorization process for repetitive scheduled nonemergent ambulance transport to reduce utilization of services that do not comply with Medicare policy.

We plan to use this prior authorization process to ensure that all relevant clinical or medical documentation requirements are met before services are rendered to beneficiaries and before claims are

[1] 42 CFR 410.40(d)(1).

[2] Program Memorandum Intermediaries/Carriers, Transmittal AB–03–106.

[3] Per 42 CFR 410.40(d)(2), the physician's order must be dated no earlier than 60 days before the date the service is furnished.

[4] Medicare Payment Advisory Commission, June 2013, pages 167–193.

submitted for payment. This prior authorization process will further ensure that payment complies with Medicare documentation, coverage, payment, and coding rules.

The use of prior authorization will not create new clinical documentation requirements. Instead, it will require the same information that is already required to support Medicare payment, just earlier in the process. Prior authorization allows providers and suppliers to address issues with claims prior to rendering services.

The prior authorization process under this model will be available for the following codes for Medicare payment:

- A0425 Ambulance service, basic life support (BLS)/advanced life support (ALS) ground mileage (per statute mile).
- A0426 Ambulance service, advanced life support, nonemergency transport, Level 1 (ALS1).
- A0428 Ambulance service, basic life support (BLS), nonemergency transport.

Prior to the start of the model, we will conduct (and thereafter will continue to conduct) outreach and education to ambulance providers/suppliers, as well as beneficiaries, through such methods as open door forums, frequently asked questions (FAQs) on our Web site, other Web site postings, and educational materials issued by the Medicare Administrative Contractors (MACs). Additional information about the implementation of the prior authorization model is available on the CMS Web site at *http://go.cms.gov/PAAmbulance.*

Under this model, an ambulance provider/supplier or beneficiary will be encouraged to submit to the MAC a request for prior authorization along with all relevant documentation to support Medicare coverage of a repetitive scheduled nonemergent ambulance transport. Submitting a prior authorization request will be voluntary. (However, if prior authorization has not been requested before the fourth round trip in a 30-day period, the claims will be stopped for pre-payment review).

In order to be provisionally affirmed, the request for prior authorization must meet all applicable rules and policies, and any local coverage determination (LCD) requirements for ambulance transport claims. A provisional affirmation is a preliminary finding that a future claim submitted to Medicare for the service likely meets Medicare's coverage, coding, and payment requirements. After receipt of all relevant documentation, the MACs will make every effort to conduct a review and postmark the notification of their decision on a prior authorization request within 10 business days for an initial submission. Notification will be provided to the ambulance provider/supplier and to the beneficiary. If a subsequent prior authorization request is submitted after a nonaffirmative decision on an initial prior authorization request, the MACs will make every effort to conduct a review and postmark the notification of their decision on the request within 20 business days.

An ambulance provider/supplier or beneficiary may request an expedited review when the standard timeframe for making a prior authorization decision could jeopardize the life or health of the beneficiary. If the MAC agrees that the standard review timeframe would put the beneficiary at risk, the MAC will make reasonable efforts to communicate a decision within 2 business days of receipt of all applicable Medicare-required documentation. As this model is for nonemergent services only, we expect requests for expedited reviews to be extremely rare.

A provisional affirmative prior authorization decision may affirm a specified number of trips within a specific amount of time. The prior authorization decision, justified by the beneficiary's condition, may affirm up to 40 round trips (which equates to 80 one-way trips) per prior authorization request in a 60-day period. Alternatively, a provisional affirmative prior authorization decision may affirm less than 40 round trips in a 60-day period, or may affirm a request that seeks to provide a specified number of transports (40 round trips or less) in less than a 60-day period. A provisional affirmative decision can be for all or part of the requested number of trips. Transports exceeding 40 round trips (or 80 one-way trips) in a 60-day period will require an additional prior authorization request.

The following describes examples of various prior authorization scenarios:

- *Scenario 1:* When an ambulance provider/supplier or beneficiary submits a prior authorization request to the MAC with appropriate documentation and all relevant Medicare coverage and documentation requirements are met for the ambulance transport, the MAC will send a provisional affirmative prior authorization decision to the ambulance provider/supplier and to the beneficiary. When the claim is submitted to the MAC by the ambulance provider/supplier, it is linked to the prior authorization via the claims processing system and the claim will be paid so long as all Medicare coding, billing, and coverage requirements are met. However, after submission, the claim could be denied for technical reasons, such as the claim was a duplicate claim or the claim was for a deceased beneficiary. In addition, a claim denial could occur since certain documentation, such as the trip record, needed in support of the claim cannot be reviewed on a prior authorization request.
- *Scenario 2:* When an ambulance provider/supplier or beneficiary submits a prior authorization request, but all relevant Medicare coverage requirements are not met, the MAC will send a nonaffirmative prior authorization decision to the ambulance provider/supplier and to the beneficiary, advising them that Medicare will not pay for the service. The provider/supplier or beneficiary may then resubmit the request with documentation showing that Medicare requirements have been met. Alternatively, an ambulance provider/supplier could render the service, and submit a claim with a nonaffirmative prior authorization tracking number, at which point the MAC would deny the claim. The ambulance provider/supplier and/or the beneficiary would then have the Medicare denial for secondary insurance purposes and would have the opportunity to submit an appeal of the claim denial if they believe Medicare coverage was denied inappropriately.
- *Scenario 3:* When an ambulance provider/supplier or beneficiary submits a prior authorization request with incomplete documentation, a detailed decision letter will be sent to the ambulance provider/supplier and to the beneficiary, with an explanation of what information is missing. The ambulance provider/supplier or beneficiary can rectify the situation and resubmit the prior authorization request with appropriate documentation.
- *Scenario 4:* When an ambulance provider or supplier renders a service to a beneficiary that is subject to the prior authorization process, and the claim is submitted to the MAC for payment without requesting a prior authorization, the claim will be stopped for prepayment review and documentation will be requested.

++ If the claim is determined to be not medically necessary or to be insufficiently documented, the claim will be denied, and all current policies and procedures regarding liability for payment will apply. The ambulance provider/supplier or the beneficiary or both can appeal the claim denial if they believe the denial was inappropriate.

++ If the claim is determined to be payable, it will be paid.

Under the model, we will work to limit any adverse impact on

beneficiaries and to educate beneficiaries about the process. If a prior authorization request is not affirmed, and the claim is still submitted by the provider/supplier, the claim will be denied in full, but beneficiaries will continue to have all applicable administrative appeal rights.

Only one prior authorization request per beneficiary per designated time period can be provisionally affirmed. If the initial provider/supplier cannot complete the total number of prior authorized transports (for example, the initial ambulance company closes or no longer services that area), the initial request is cancelled. In this situation, a subsequent prior authorization request may be submitted for the same beneficiary and must include the required documentation in the submission. If multiple ambulance providers/suppliers are providing transports to the beneficiary during the same or overlapping time period, the prior authorization decision will only cover the provider/supplier indicated in the provisionally affirmed prior authorization request. Any provider/supplier submitting claims for repetitive scheduled nonemergent ambulance transports for which no prior authorization request is recorded will be subject to 100 percent prepayment medical review of those claims.

Additional information is available on the CMS Web site at *http://go.cms.gov/PAAmbulance.*

III. Collection of Information Requirements

Section 1115A(d)(3) of the Act, as added by section 3021 of the Affordable Care Act, states that chapter 35 of title 44, United States Code (the Paperwork Reduction Act of 1995), shall not apply to the testing and evaluation of models or expansion of such models under this section. Consequently, this document need not be reviewed by the Office of Management and Budget under the authority of the Paperwork Reduction Act of 1995 (44 U.S.C. 35).

Authority: Section 1115A of the Social Security Act.

Dated: October 8, 2014.

Marilyn Tavenner,

Administrator, Centers for Medicare & Medicaid Services.

[FR Doc. 2014–26987 Filed 11–13–14; 8:45 am]

BILLING CODE 4120–01–P

DEPARTMENT OF HEALTH AND HUMAN SERVICES

Food and Drug Administration

[Docket No. FDA–2011–N–0279]

Agency Information Collection Activities; Proposed Collection; Comment Request; Prescription Drug Marketing Act of 1987; Administrative Procedures, Policies, and Requirements

AGENCY: Food and Drug Administration, HHS.

ACTION: Notice.

SUMMARY: The Food and Drug Administration (FDA) is announcing an opportunity for public comment on the proposed collection of certain information by the Agency. Under the Paperwork Reduction Act of 1995 (the PRA), Federal Agencies are required to publish notice in the **Federal Register** concerning each proposed collection of information, including each proposed extension of an existing collection of information, and to allow 60 days for public comment in response to the notice. This notice solicits comments on the information collection in the regulations on the Prescription Drug Marketing Act of 1987; Administrative Procedures, Policies, and Requirements.

DATES: Submit either electronic or written comments on the collection of information by January 13, 2015.

ADDRESSES: Submit electronic comments on the collection of information to: *http://www.regulations.gov.* Submit written comments on the collection of information to the Division of Dockets Management (HFA 305), Food and Drug Administration, 5630 Fishers Lane, Rm. 1061, Rockville, MD 20852. All comments should be identified with the docket number found in brackets in the heading of this document.

FOR FURTHER INFORMATION CONTACT: FDA PRA Staff, Office of Operations, Food and Drug Administration, 8455 Colesville Rd., COLE–14526, Silver Spring, MD 20993–0002, *PRAStaff@fda.hhs.gov.*

SUPPLEMENTARY INFORMATION: Under the PRA (44 U.S.C. 3501–3520), Federal Agencies must obtain approval from the Office of Management and Budget (OMB) for each collection of information they conduct or sponsor. ''Collection of information'' is defined in 44 U.S.C. 3502(3) and 5 CFR 1320.3(c) and includes Agency requests or requirements that members of the public submit reports, keep records, or provide information to a third party. Section 3506(c)(2)(A) of the PRA (44 U.S.C. 3506(c)(2)(A)) requires Federal Agencies to provide a 60-day notice in the **Federal Register** concerning each proposed collection of information, including each proposed extension of an existing collection of information, before submitting the collection to OMB for approval. To comply with this requirement, FDA is publishing notice of the proposed collection of information set forth in this document.

With respect to the following collection of information, FDA invites comments on these topics: (1) Whether the proposed collection of information is necessary for the proper performance of FDA's functions, including whether the information will have practical utility; (2) the accuracy of FDA's estimate of the burden of the proposed collection of information, including the validity of the methodology and assumptions used; (3) ways to enhance the quality, utility, and clarity of the information to be collected; and (4) ways to minimize the burden of the collection of information on respondents, including through the use of automated collection techniques, when appropriate, and other forms of information technology.

Prescription Drug Marketing Act of 1987; Administrative Procedures, Policies, and Requirements—21 CFR Part 203—(OMB Control Number 0910–0435)—Extension

FDA is requesting OMB approval under the PRA (44 U.S.C. 3501–3520) for the reporting and recordkeeping requirements contained in the regulations implementing the Prescription Drug Marketing Act of 1987 (PDMA). PDMA was intended to ensure that drug products purchased by consumers are safe and effective and to avoid an unacceptable risk that counterfeit, adulterated, misbranded, subpotent, or expired drugs are sold.

PDMA was enacted by Congress because there were insufficient safeguards in the drug distribution system to prevent the introduction and retail sale of substandard, ineffective, or counterfeit drugs, and that a wholesale drug diversion submarket had developed that prevented effective control over the true sources of drugs.

Congress found that large amounts of drugs had been reimported into the United States as U.S. goods returned causing a health and safety risk to U.S. consumers because the drugs may become subpotent or adulterated during foreign handling and shipping. Congress also found that a ready market for prescription drug reimports had been the catalyst for a continuing series of

frauds against U.S. manufacturers and had provided the cover for the importation of foreign counterfeit drugs.

Congress also determined that the system of providing drug samples to physicians through manufacturers' representatives had resulted in the sale to consumers of misbranded, expired, and adulterated pharmaceuticals.

The bulk resale of below-wholesale priced prescription drugs by health care entities for ultimate sale at retail also helped to fuel the diversion market and was an unfair form of competition to wholesalers and retailers who had to pay otherwise prevailing market prices.

FDA is requesting OMB approval for the following existing reporting and recordkeeping requirements:

TABLE 1—REPORTING REQUIREMENTS

21 CFR section	Requirement
203.11	Applications for re-importation to provide emergency medical care.
203.30(a)(1) and (b)	Drug sample requests (drug samples distributed by mail or common carrier).
203.30(a)(3), (a)(4), and (c)	Drug sample receipts (receipts for drug samples distributed by mail or common carrier).
203.31(a)(1) and (b)	Drug sample requests (drug samples distributed by means other than the mail or a common carrier).
203.31(a)(3), (a)(4), and (c)	Drug sample receipts (drug samples distributed by means other than the mail or a common carrier).
203.37(a)	Investigation of falsification of drug sample records.
203.37(b)	Investigation of a significant loss or known theft of drug samples.
203.37(c)	Notification that a representative has been convicted of certain offenses involving drug samples.
203.37(d)	Notification of the individual responsible for responding to a request for information about drug samples.
203.39(g)	Preparation by a charitable institution of a reconciliation report for donated drug samples.

TABLE 2—RECORDKEEPING REQUIREMENTS

21 CFR section	Requirement
203.23(a) and (b)	Credit memo for returned drugs.
203.23(c)	Documentation of proper storage, handling, and shipping conditions for returned drugs.
203.30(a)(2) and 203.31(a)(2)	Verification that a practitioner requesting a drug sample is licensed or authorized by the appropriate State authority to prescribe the product.
203.31(d)(1) and (d)(2)	Contents of the inventory record and reconciliation report required for drug samples distributed by representatives.
203.31(d)(4)	Investigation of apparent discrepancies and significant losses revealed through the reconciliation report.
203.31(e)	Lists of manufacturers' and distributors' representatives.
203.34	Written policies and procedures describing administrative systems.
203.37(a)	Report of investigation of falsification of drug sample records.
203.37(b)	Report of investigation of significant loss or known theft of drug samples.
203.38(b)	Records of drug sample distribution identifying lot or control numbers of samples distributed. (The information collection in 21 CFR 203.38(b) is already approved under OMB control number 0910–0139).
203.39(d)	Records of drug samples destroyed or returned by a charitable institution.
203.39(e)	Record of drug samples donated to a charitable institution.
203.39(f)	Records of donation and distribution or other disposition of donated drug samples.
203.39(g)	Inventory and reconciliation of drug samples donated to charitable institutions.
203.50(a)	Drug origin statement.
203.50(b)	Retention of drug origin statement for 3 years.
203.50(d)	List of authorized distributors of record.

The reporting and recordkeeping requirements are intended to help achieve the following goals: (1) To ban the reimportation of prescription drugs produced in the United States, except when reimported by the manufacturer or under FDA authorization for emergency medical care; (2) to ban the sale, purchase, or trade, or the offer to sell, purchase, or trade, of any prescription drug sample; (3) to limit the distribution of drug samples to practitioners licensed or authorized to prescribe such drugs or to pharmacies of hospitals or other health care entities at the request of a licensed or authorized practitioner; (4) to require licensed or authorized practitioners to request prescription drug samples in writing; (5) to mandate storage, handling, and recordkeeping requirements for prescription drug samples; (6) to prohibit, with certain exceptions, the sale, purchase, or trade of, or the offer to sell, purchase, or trade, prescription drugs that were purchased by hospitals or other health care entities, or which were donated or supplied at a reduced price to a charitable organization; (7) to require unauthorized wholesale distributors to provide, prior to the wholesale distribution of a prescription drug to another wholesale distributor or retail pharmacy, a statement identifying each prior sale, purchase, or trade of the drug.

FDA estimates the burden of this collection of information as follows:

TABLE 1—ESTIMATED ANNUAL REPORTING BURDEN [1]

21 CFR section	Number of respondents	Number of responses per respondent	Total annual respondents	Average burden per response	Total hours
203.11 Re-importation	1	1	1	.50 (30 minutes)	1
203.30(a)(1) and (b) Drug sample requests	61,961	12	743,532	.06 (4 minutes)	44,612

TABLE 1—ESTIMATED ANNUAL REPORTING BURDEN [1]—Continued

21 CFR section	Number of respondents	Number of responses per respondent	Total annual respondents	Average burden per response	Total hours
203.30(a)(3), (a)(4), (c) Drug sample receipts	61,961	12	743,532	.06 (4 minutes)	44,612
203.31(a)(1) and (b) Drug sample requests	232,355	135	31,367,925	.04 (2 minutes)	1,254,717
203.31(a)(3), (a)(4),(c) Drug sample receipts	232,355	135	31,367,925	.03 (2 minutes)	941,038
203.37(a) Falsification of records	50	4	200	.25 (15 minutes)	50
203.37(b) Loss or theft of samples	50	40	2000	.25 (15 minutes)	500
203.37(c) Convictions	1	1	1	1	1
203.37(d) Contact person	50	1	50	.08 (5 minutes)	4
203.39(g) Reconciliation report	1	1	1	1	1
Total					2,285,536

[1] There are no capital costs or operating and maintenance costs associated with this collection of information.

TABLE 2—ESTIMATED ANNUAL RECORDKEEPING BURDEN [1]

21 CFR section	Number of recordkeepers	Number of records per recordkeeper	Total annual records	Average burden per record-keeping	Total hours
203.23(a) and (b) Returned drugs	31,676	5	158,380	.25 (15 minutes)	39,595
203.23(c) Returned drugs documentation	31,676	5	158,380	.08 (5 minutes)	12,670
203.30(a)(2) and 203.31(a)(2) Practitioner verification.	2,208	100	220,800	.50 (30 minutes)	110,400
203.31(d)(1) and (d)(2) Inventory record and reconciliation report.	2,208	1	2,208	40	88,320
203.31(d)(4) Investigation of discrepancies and losses.	442	1	442	24	10,608
203.31(e) Representatives lists	2,208	1	2,208	1	2,208
203.34 Administrative systems	90	1	90	40	3,600
203.37(a) Falsification of drug sample records	50	4	200	6	1200
203.37(b) Loss or theft of drug samples	50	40	2000	6	12,000
203.39(d) Destroyed or returned drug samples	65	1	65	1	65
203.39(e) Donated drug samples	3,221	1	3,221	.50 (30 minutes)	1,611
203.39(f) Distribution of donated drug samples	3,221	1	3,221	8	25,768
203.39(g) Drug samples donated to charitable institutions.	3,221	1	3,221	8	25,768
203.50(a) Drug origin statement	125	100	12,500	.17 (10 minutes)	2,125
203.50(b) Drug origin statement retention	125	100	12,500	.50 (30 minutes)	6,250
203.50(d) Authorized distributors of record	691	1	691	2	1,382
Total					343,570

[1] There are no capital costs or operating and maintenance costs associated with this collection of information.

Dated: November 7, 2014.

Leslie Kux,

Assistant Commissioner for Policy.

[FR Doc. 2014–26917 Filed 11–13–14; 8:45 am]

BILLING CODE 4164–01–P

DEPARTMENT OF HEALTH AND HUMAN SERVICES

Food and Drug Administration

[Docket No. FDA–2013–N–0878]

Agency Information Collection Activities; Proposed Collection; Comment Request; Premarket Notification for a New Dietary Ingredient

AGENCY: Food and Drug Administration, HHS.

ACTION: Notice.

SUMMARY: The Food and Drug Administration (FDA) is announcing an opportunity for public comment on the proposed collection of certain information by the Agency. Under the Paperwork Reduction Act of 1995 (the PRA), Federal Agencies are required to publish notice in the **Federal Register** concerning each proposed collection of information, including each proposed extension of an existing collection of information, and to allow 60 days for public comment in response to the notice. This notice solicits comments on the procedure by which a manufacturer or distributor of a new dietary ingredient or of a dietary supplement containing a new dietary ingredient is to submit to FDA information upon which it has based its conclusion that a dietary supplement containing the new dietary ingredient will reasonably be expected to be safe. The notice also invites comments on two new forms FDA is developing to allow manufacturers and distributors to submit this information electronically via FDA's Unified Registration and Listing System (FURLS).

DATES: Submit either electronic or written comments on the collection of information by January 13, 2015.

ADDRESSES: Submit electronic comments on the collection of information to *http://www.regulations.gov.* Submit written comments on the collection of information to the Division of Dockets Management (HFA–305), Food and Drug Administration, 5630 Fishers Lane, Rm. 1061, Rockville, MD 20852. All comments should be identified with the

docket number found in brackets in the heading of this document.

FOR FURTHER INFORMATION CONTACT: FDA PRA Staff, Office of Operations, Food and Drug Administration, 8455 Colesville Rd., COLE–14526, Silver Spring, MD 20993–0002, *PRAStaff@fda.hhs.gov.*

SUPPLEMENTARY INFORMATION: Under the PRA (44 U.S.C. 3501–3520), Federal Agencies must obtain approval from the Office of Management and Budget (OMB) for each collection of information they conduct or sponsor. ''Collection of information'' is defined in 44 U.S.C. 3502(3) and 5 CFR 1320.3(c) and includes Agency requests or requirements that members of the public submit reports, keep records, or provide information to a third party. Section 3506(c)(2)(A) of the PRA (44 U.S.C. 3506(c)(2)(A)) requires Federal Agencies to provide a 60-day notice in the **Federal Register** concerning each proposed collection of information, including each proposed extension of an existing collection of information, before submitting the collection to OMB for approval. To comply with this requirement, FDA is publishing notice of the proposed collection of information set forth in this document.

With respect to the following collection of information, FDA invites comments on these topics: (1) Whether the proposed collection of information is necessary for the proper performance of FDA's functions, including whether the information will have practical utility; (2) the accuracy of FDA's estimate of the burden of the proposed collection of information, including the validity of the methodology and assumptions used; (3) ways to enhance the quality, utility, and clarity of the information to be collected; and (4) ways to minimize the burden of the collection of information on respondents, including through the use of automated collection techniques, when appropriate, and other forms of information technology.

Premarket Notification for a New Dietary Ingredient—21 CFR 190.6 (OMB Control Number 0910–0330)—Extension

Section 413(a) of the Federal Food, Drug, and Cosmetic Act (the FD&C Act) (21 U.S.C. 350b(a)) provides that at least 75 days before the introduction or delivery for introduction into interstate commerce of a dietary supplement that contains a new dietary ingredient, the manufacturer or distributor of the dietary supplement or of the new dietary ingredient is to submit to FDA (as delegate for the Secretary of Health and Human Services) information upon which the manufacturer or distributor has based its conclusion that a dietary supplement containing the new dietary ingredient will reasonably be expected to be safe. FDA's implementing regulation, 21 CFR 190.6, requires this information to be submitted to the Office of Nutrition, Labeling, and Dietary Supplements (ONLDS) in the form of a notification. Under § 190.6(b), the notification must include the following: (1) The name and complete address of the manufacturer or distributor, (2) the name of the new dietary ingredient, (3) a description of the dietary supplement(s) that contain the new dietary ingredient, including the level of the new dietary ingredient in the dietary supplement and the dietary supplement's conditions of use, (4) the history of use or other evidence of safety establishing that the new dietary ingredient will reasonably be expected to be safe when used under the conditions recommended or suggested in the labeling of the dietary supplement, and (5) the signature of a responsible person designated by the manufacturer or distributor.

These premarket notification requirements are designed to enable us to monitor the introduction into the marketplace of new dietary ingredients and dietary supplements that contain new dietary ingredients in order to protect consumers from ingredients and products whose safety is unknown. FDA is the information collected in new dietary ingredient notifications to evaluate the safety of new dietary ingredients in dietary supplements and to support regulatory action against ingredients and products that are potentially unsafe.

FDA is developing an electronic portal that interested persons will be able to use to electronically submit their notifications to ONLDS via FURLS. Firms that prefer to submit a paper notification in a format of their own choosing will still have the option to do so; however, Form FDA 3880 prompts a submitter to input the elements of a new dietary ingredient notification (NDIN) in a standard format and helps the submitter organize its NDIN to focus on the information needed for FDA's safety review. Safety information will be submitted via a supplemental form entitled ''New Dietary Ingredient Safety Information.'' This form provides a standard format to describe the history of use or other evidence of safety on which the manufacturer or distributor bases its conclusion that the new dietary ingredient will be reasonably expected to be safe under the conditions of use recommended or suggested in the labeling of the dietary supplement, as well as related identity information that is necessary to demonstrate safety by showing that the new dietary ingredient and dietary supplement(s) that are the subject of the notification are the same or similar to the ingredients and products for which safety data and information have been provided. Draft screenshots of Form FDA 3880 and the supplemental safety information form are available for comment at *http://www.fda.gov/Food/DietarySupplements/NewDietaryIngredientsNotificationProcess/ucm356620.htm.*

Description of Respondents: The respondents to this collection of information are manufacturers and distributors in the dietary supplement industry; specifically, firms that manufacture or distribute new dietary ingredients or dietary supplements that contain a new dietary ingredient.

FDA estimates the burden of this collection of information as follows:

TABLE 1—ESTIMATED ANNUAL REPORTING BURDEN [1]

21 CFR section	Number of respondents	Number of responses per respondent	Total annual responses	Average burden per response	Total hours
190.6	55	1	55	20	1,100

[1] There are no capital costs or operating and maintenance costs associated with this collection of information.

FDA believes that the burden of the premarket notification requirement on industry is limited and reasonable because FDA is requesting only safety and identity information that the manufacturer or distributor should already have developed to satisfy itself that a dietary supplement containing a new dietary ingredient is in compliance

with the FD&C Act. In the past, commenters have argued that FDA's burden estimate is too low. FDA carefully considered the issue and believes that burden estimates of greater than 20 hours are likely to include the burden associated with researching and generating safety data for a new dietary ingredient. Under section 413(a)(2) of the FD&C Act, a dietary supplement that contains a new dietary ingredient is deemed to be adulterated unless there is a history of use or other evidence of safety establishing that the new dietary ingredient will reasonably be expected to be safe under the conditions of use recommended or suggested in the labeling of the dietary supplement. This requirement is separate from and additional to the requirement to submit a premarket notification for the new dietary ingredient. FDA's regulation on new dietary ingredient notifications, § 190.6(a), requires the manufacturer or distributor of the dietary supplement or of the new dietary ingredient to submit to FDA the information that forms the basis for its conclusion that a dietary supplement containing the new dietary ingredient will reasonably be expected to be safe. Thus, § 190.6 only requires the manufacturer or distributor to extract and summarize information that should have already been developed to meet the safety requirement in section 413(a)(2) of the FD&C Act. FDA estimates that extracting and summarizing the relevant information from what exists in the company's files and presenting it in a format that meets the requirements of § 190.6 will take approximately 20 hours of work per notification. However, FDA seeks comments on this estimate. FDA encourages comments offering alternative burden estimates to include documentation to support the alternative estimate.

FDA further estimates that 55 respondents will submit 1 premarket notification each. FDA bases its estimate of the number of respondents on notifications received over the past 3 years, which averaged about 55 notifications per year.

Dated: November 10, 2014.

Leslie Kux,

Assistant Commissioner for Policy.

[FR Doc. 2014–26998 Filed 11–13–14; 8:45 am]

BILLING CODE 4164–01–P

DEPARTMENT OF HEALTH AND HUMAN SERVICES

Food and Drug Administration

[Docket No. FDA–2010–N–0161]

Agency Information Collection Activities; Proposed Collection; Comment Request; Export of Food and Drug Administration Regulated Products: Export Certificates

AGENCY: Food and Drug Administration, HHS.

ACTION: Notice.

SUMMARY: The Food and Drug Administration (FDA) is announcing an opportunity for public comment on the proposed collection of certain information by the Agency. Under the Paperwork Reduction Act of 1995 (the PRA), Federal Agencies are required to publish notice in the **Federal Register** concerning each proposed collection of information, including each proposed extension of an existing collection of information, and to allow 60 days for public comment in response to the notice. This notice solicits comments on information collection requirements imposed on firms that intend to export to countries that require an export certificate as a condition of entry for FDA regulated products, pharmaceuticals, biologics, and devices as indicated in the Federal Food, Drug, and Cosmetic Act (the FD&C Act) as amended.

DATES: Submit either electronic or written comments on the collection of information by January 13, 2015.

ADDRESSES: Submit electronic comments on the collection of information to *http://www.regulations.gov.* Submit written comments on the collection of information to the Division of Dockets Management (HFA–305), Food and Drug Administration, 5630 Fishers Lane, Rm. 1061, Rockville, MD 20852. All comments should be identified with the docket number found in brackets in the heading of this document.

FOR FURTHER INFORMATION CONTACT: FDA PRA Staff, Office of Operations, Food and Drug Administration, 8455 Colesville Rd., COLE–14526, Silver Spring, MD 20993–0002, *PRAStaff@fda.hhs.gov.*

SUPPLEMENTARY INFORMATION: Under the PRA (44 U.S.C. 3501–3520), Federal Agencies must obtain approval from the Office of Management and Budget (OMB) for each collection of information they conduct or sponsor. ''Collection of information'' is defined in 44 U.S.C. 3502(3) and 5 CFR 1320.3(c) and includes Agency requests or requirements that members of the public submit reports, keep records, or provide information to a third party. Section 3506(c)(2)(A) of the PRA (44 U.S.C. 3506(c)(2)(A)) requires Federal Agencies to provide a 60-day notice in the **Federal Register** concerning each proposed collection of information, including each proposed extension of an existing collection of information, before submitting the collection to OMB for approval. To comply with this requirement, FDA is publishing notice of the proposed collection of information set forth in this document.

With respect to the following collection of information, FDA invites comments on these topics: (1) Whether the proposed collection of information is necessary for the proper performance of FDA's functions, including whether the information will have practical utility; (2) the accuracy of FDA's estimate of the burden of the proposed collection of information, including the validity of the methodology and assumptions used; (3) ways to enhance the quality, utility, and clarity of the information to be collected; and (4) ways to minimize the burden of the collection of information on respondents, including through the use of automated collection techniques, when appropriate, and other forms of information technology.

Export of Food and Drug Administration Regulated Products: Export Certificates (OMB Control Number 0910–0498)—Extension

In April 1996, a law entitled ''The FDA Export Reform and Enhancement Act of 1996'' (FDAERA) amended sections 801(e) and 802 of the FD&C Act (21 U.S.C. 381(e) and 382). It was designed to ease restrictions on exportation of unapproved pharmaceuticals, biologics, and devices regulated by FDA. Section 801(e)(4) of the FDAERA provides that persons exporting certain FDA regulated products may request FDA to certify that the products meet the requirements of 801(e) and 802 or other requirements of the FD&C Act. This section of the law requires FDA to issue certification within 20 days of receipt of the request and to charge firms up to $175 for the certifications.

This section of the FD&C Act authorizes FDA to issue export certificates for regulated pharmaceuticals, biologics, and devices that are legally marketed in the United States, as well as for these same products that are not legally marketed but are acceptable to the importing country, as specified in sections 801(e)

and 802 of the FD&C Act. FDA has developed five types of certificates that satisfy the requirements of section 801(e)(4)(B) of the FD&C Act: (1) Certificates to Foreign Governments, (2) Certificates of Exportability, (3) Certificates of a Pharmaceutical Product, and (4) Non-Clinical Research Use Only Certificates. Table 1 of this document lists the different certificates and details their use:

TABLE 1—CERTIFICATES AND USES

Type of certificate	Use
''Supplementary Information Certificate to Foreign Government Requests''. ''Exporter's Certification Statement Certificate to Foreign Government (For Human Tissue Intended for Transplantation)''.	For the export of products legally marketed in the United States. ''Exporter's Certification Statement Certificate to Foreign Government.''
''Supplementary Information Certificate of Exportability Requests'' ..... Exporter's Certification Statement Certificate of Exportability''	For the export of products not approved for marketing in the United States (unapproved products) that meet the requirements of sections 801(e) or 802 of the FD&C Act.
''Supplementary Information Certificate of a Pharmaceutical Product'' ... ''Exporter's Certification Statement Certificate of a Pharmaceutical Product''.	Conforms to the format established by the World Health Organization and is intended for use by the importing country when the product in question is under consideration for a product license that will authorize its importation and sale or for renewal, extension, amending, or reviewing a license.
''Supplementary Information Non-Clinical Research Use Only Certificate''. ''Exporter's Certification Statement (Non-Clinical Research Use Only).''	For the export of a non-clinical research use only product, material, or component that is not intended for human use which may be marketed in, and legally exported from the United States under the FD&C Act.

FDA will continue to rely on self-certification by manufacturers for the first three types of certificates listed in table 1 of this document. Manufacturers are requested to self-certify that they are in compliance with all applicable requirements of the FD&C Act, not only at the time that they submit their request to the appropriate center, but also at the time that they submit the certification to the foreign government.

The appropriate FDA centers will review product information submitted by firms in support of their certificate and any suspected case of fraud will be referred to FDA's Office of Criminal Investigations for follow up. Making or submitting to FDA false statements on any documents may constitute violations of 18 U.S.C. 1001, with penalties including up to $250,000 in fines and up to 5 years imprisonment.

FDA estimates the burden of this collection of information as follows:

TABLE 2—ESTIMATED ANNUAL REPORTING BURDEN [1]

FDA center	Number of respondents	Number of responses per respondent	Total annual responses	Average burden per response	Total hours
Center for Biologics Evaluation and Research	2,114	1	2,114	1	2,114
Center for Devices and Radiological Health	6,463	1	6,463	2	12,926
Center for Veterinary Medicine	855	1	855	1	855
Total	.....	.....	.....	.....	15,895

[1] There are no capital costs or operating and maintenance costs associated with this collection of information.

Dated: November 10, 2014.

Leslie Kux,

Assistant Commissioner for Policy.

[FR Doc. 2014–26999 Filed 11–13–14; 8:45 am]

BILLING CODE 4164–01–P

DEPARTMENT OF HEALTH AND HUMAN SERVICES

Food and Drug Administration

[Docket No. FDA–2014–N–1819]

Agency Information Collection Activities; Proposed Collection; Comment Request; Spousal Influence on Consumer Understanding of and Response to Direct-To-Consumer Prescription Drug Advertisements

AGENCY: Food and Drug Administration, HHS.

ACTION: Notice.

SUMMARY: The Food and Drug Administration (FDA) is announcing an opportunity for public comment on the proposed collection of certain information by the Agency. Under the Paperwork Reduction Act of 1995 (the PRA), Federal Agencies are required to publish notice in the **Federal Register** concerning each proposed collection of information and to allow 60 days for public comment in response to the notice. This notice solicits comments on research entitled, ''Spousal Influence on Consumer Understanding of and Response to Direct-To-Consumer (DTC) Prescription Drug Advertisements.'' This study will examine differences between consumers viewing prescription drug ads with a spouse or partner versus alone through empirical research.

DATES: Submit either electronic or written comments on the collection of information by January 13, 2015.

ADDRESSES: Submit electronic comments on the collection of information to *http://www.regulations.gov.* Submit written comments on the collection of information to the Division of Dockets Management (HFA–305), Food and Drug Administration, 5630 Fishers Lane, Rm. 1061, Rockville, MD 20852. All comments should be identified with the docket number found in brackets in the heading of this document.

FOR FURTHER INFORMATION CONTACT: FDA PRA Staff, Office of Operations, Food and Drug Administration, 8455 Colesville Rd., COLE–14526, Silver Spring, MD 20993–0002, *PRAStaff@fda.hhs.gov.*

SUPPLEMENTARY INFORMATION: Under the PRA (44 U.S.C. 3501–3520), Federal Agencies must obtain approval from the Office of Management and Budget (OMB) for each collection of information they conduct or sponsor. ''Collection of information'' is defined in 44 U.S.C. 3502(3) and 5 CFR 1320.3(c) and includes Agency requests or requirements that members of the public submit reports, keep records, or provide information to a third party. Section 3506(c)(2)(A) of the PRA (44 U.S.C. 3506(c)(2)(A)) requires Federal Agencies to provide a 60-day notice in the **Federal Register** concerning each proposed collection of information before submitting the collection to OMB for approval. To comply with this requirement, FDA is publishing notice of the proposed collection of information set forth in this document.

With respect to the following collection of information, FDA invites comments on these topics: (1) Whether the proposed collection of information is necessary for the proper performance of FDA's functions, including whether the information will have practical utility; (2) the accuracy of FDA's estimate of the burden of the proposed collection of information, including the validity of the methodology and assumptions used; (3) ways to enhance the quality, utility, and clarity of the information to be collected; and (4) ways to minimize the burden of the collection of information on respondents, including through the use of automated collection techniques, when appropriate, and other forms of information technology.

Spousal Influence on Consumer Understanding of and Response to DTC Prescription Drug Advertisements—(OMB Control Number 0910–NEW)

Section 1701(a)(4) of the Public Health Service Act (42 U.S.C. 300u(a)(4)) authorizes the FDA to conduct research relating to health information. Section 1003(d)(2)(C) of the Federal Food, Drug, and Cosmetic Act (the FD&C Act) (21 U.S.C. 393(b)(2)(c)) authorizes FDA to conduct research relating to drugs and other FDA regulated products in carrying out the provisions of the FD&C Act.

Consumers are often thought of as individual targets for prescription drug advertisements (ads), as if they are always exposed to DTC ads individually and subsequently make judgments about advertised products on their own. However, judgments about prescription drugs portrayed in DTC ads are likely made in social contexts much of the time. For example, a potential consumer and his or her spouse (e.g., marital or domestic partner) may view an ad together and discuss drug benefits, side effects, and risks. These social interactions may result in unique reactions relative to consumers who view DTC prescription drug ads alone. For example, spouses may influence their partner by expressing concern about risks and side effects that might occur, or pressuring their partner to consider the drug despite its risks and side effects. These outcomes have important public health implications. The Office of Prescription Drug Promotion plans to examine differences between consumers viewing prescription drug ads with a spouse versus alone through empirical research.

The main study will be preceded by pretesting, designed to delineate the procedures and measures used in the main study. Pretest and main study participants will be couples who are married or in a marital-like living arrangement in which one member (consumer) has asthma and the other does not (spouse). All participants will be 18 years of age or older. We will exclude individuals who work in healthcare or marketing settings because their knowledge and experiences may not reflect those of the average consumer. Data collection will take place in person.

Participants will be randomly assigned to one of four experimental conditions in a 2 × 2 design, as depicted in Table 1. We will compare one version of an ad that depicts a low-benefit and low-risk drug with a second version that depicts a high-benefit and high-risk drug. Participants will be randomly assigned to view the ad alone or together with their spouse. Participants in both viewing conditions will individually complete a prequestionnaire. In the ''together'' condition, participants will view the ad with their spouse and then engage in a brief discussion together about the ad. In the ''alone'' condition, participants will view the ad without their spouse, take a short break, and then respond to a postquestionnaire consisting of questions about information in the ad. The short break in the ''alone'' condition will facilitate reflection about the ad to mirror discussion engaged in by those in the ''together'' condition. The consumer in the ''together'' condition will complete the same postquestionnaire administered to those in the ''alone'' condition, and the spouse will complete a slightly different questionnaire that assesses key measures that relate to consumer reactions. These procedures are depicted in Table 2. Participation is estimated to take approximately 60 minutes.

Preliminary measures are designed to assess memory and understanding of risk and benefit information as well as other ad content, intention to seek more information about the product, and variables pertaining to the consumer-spouse relationship such as relationship closeness and communication style. The draft questionnaire is available upon request.

TABLE 1—EXPERIMENTAL STUDY DESIGN

Viewing condition	Risk/Benefit condition	
	Low risk/low benefit	High risk/high benefit
Alone	Condition A	Condition B.
Together	Condition C	Condition D.

TABLE 2—OVERVIEW OF DATA COLLECTION PROCESS FOR ALONE AND TOGETHER CONDITIONS

Steps	Viewing condition	
	Alone	Together
1	Consumer completes prequestionnaire	Consumer and spouse complete prequestionnaire separately (spouse completes selected measures).
2	Consumer views advertising stimuli alone	Consumer and spouse view advertising stimuli together.
3	Break	Couples engage in a 5-minute semistructured conversation related to the advertising stimuli.
4	Consumer completes postquestionnaire	Consumer and spouse complete postquestionnaire separately (spouse completes selected measures).

To examine differences between experimental conditions, we will conduct inferential statistical tests such as analysis of variance. With the sample size described below, we will have sufficient power to detect small-to-medium sized effects in the main study.

FDA estimates the burden of this collection of information as follows:

TABLE 3—ESTIMATED ANNUAL REPORTING BURDEN [1]

Activity	Number of respondents	Number of responses per respondent	Total annual responses	Average burden per response	Total hours
Pretesting					
Number to complete the screener	700	1	700	0.08 (5 minutes)	56
Number of completes	120	1	120	1	120
Main study					
Number to complete the screener	4,060	1	4,060	0.08 (5 minutes)	325
Number of completes	792	1	792	1	792
Total					1,293

[1] There are no capital costs or operating and maintenance costs associated with this collection of information.

Dated: November 7, 2014.

Leslie Kux,

Assistant Commissioner for Policy.

[FR Doc. 2014–26918 Filed 11–13–14; 8:45 am]

BILLING CODE 4164–01–P

DEPARTMENT OF HEALTH AND HUMAN SERVICES

Food and Drug Administration

[Docket No. FDA–2014–N–1617]

Blood Products Advisory Committee; Amendment of Notice

AGENCY: Food and Drug Administration, HHS.

ACTION: Notice.

SUMMARY: The Food and Drug Administration (FDA) is announcing an amendment to the notice of the meeting of the Blood Products Advisory Committee. This meeting was announced in the **Federal Register** of October 22, 2014. The amendment is being made to reflect a change in the *Agenda* portion of the document. There are no other changes.

FOR FURTHER INFORMATION CONTACT: Bryan Emery or Joanne Lipkind, Center for Biologics Evaluation and Research, Food and Drug Administration, 10903 New Hampshire Ave., Bldg. 71, Rm. 6132, Silver Spring, MD 20993, 240–402–8054 or 240–402–8129, or FDA Advisory Committee Information Line, 1–800–741–8138 (301–443–0572 in the Washington, DC area). A notice in the **Federal Register** about last minute modifications that impact a previously announced advisory committee meeting cannot always be published quickly enough to provide timely notice. Therefore, you should always check the Agency's Web site at *http://www.fda.gov/AdvisoryCommittees/default.htm* and scroll down to the appropriate advisory committee meeting link, or call the advisory committee information line to learn about possible modifications before coming to the meeting.

SUPPLEMENTARY INFORMATION: In the **Federal Register** of October 22, 2014 (79 FR 63131), FDA announced that a meeting of the Blood Products Advisory Committee would be held on December 2 and 3, 2014. On page 63131, in the third column, the *Agenda* portion of the document is changed to read as follows:

Agenda: On December 2, 2014, the Committee will meet in open session to hear scientific data related to reconsideration of the current blood donor deferral policy for men who have had sex with another man (MSM) even one time since 1977. The Committee will be presented with an update on the November 13, 2014, meeting of the U.S. Department of Health and Human Services Advisory Committee on Blood and Tissue Safety and Availability where the MSM blood donor deferral policy will be discussed. In the afternoon, the Committee will hear an informational presentation on Ebola virus, the potential implications for blood safety in the United States and FDA's considerations on the collection of convalescent plasma for investigational use.

On December 3, 2014, the Blood Products Advisory Committee will be seated as a device classification panel. In open session, the panel will discuss the appropriate device classification of

blood establishment computer software (BECS) and accessories to BECS. Blood establishment computer software is currently subject to the premarket notification (510(k)) provisions of the Federal Food, Drug, and Cosmetic Act. In the afternoon, an informational presentation will be made regarding the emergence of chikungunya virus infections in the Western Hemisphere and potential implications for blood transfusion safety. The Committee will also hear an informational presentation on the first survey of the Rapid Donor Surveillance (RapidDOS) project on Middle Eastern Respiratory Syndrome coronavirus (MERS-CoV)

This notice is issued under the Federal Advisory Committee Act (5 U.S.C. app. 2) and 21 CFR part 14, relating to the advisory committees.

Dated: November 10, 2014.

Jill Hartzler Warner,

Associate Commissioner for Special Medical Programs.

[FR Doc. 2014–26969 Filed 11–13–14; 8:45 am]

BILLING CODE 4164–01–P

DEPARTMENT OF HEALTH AND HUMAN SERVICES

National Institutes of Health

National Institute of Environmental Health Sciences; Notice of Closed Meetings

Pursuant to section 10(d) of the Federal Advisory Committee Act, as amended (5 U.S.C. App.), notice is hereby given of the following meetings.

The meetings will be closed to the public in accordance with the provisions set forth in sections 552b(c)(4) and 552b(c)(6), Title 5 U.S.C., as amended. The grant applications and the discussions could disclose confidential trade secrets or commercial property such as patentable material, and personal information concerning individuals associated with the grant applications, the disclosure of which would constitute a clearly unwarranted invasion of personal privacy.

Name of Committee: National Institute of Environmental Health Sciences Special Emphasis Panel; Biomonitoring Technologies.

Date: December 3–4, 2014.

Time: 8:00 a.m. to 5:00 p.m.

Agenda: To review and evaluate grant applications.

Place: National Institute of Environmental Health Sciences, 530 Davis Drive, Keystone Building, Research Triangle Park, NC 27709 (Virtual Meeting).

Contact Person: Sally Eckert-Tilotta, Ph.D. Scientific Review Officer, Nat. Institute of Environmental Health Sciences, Office of Program Operations, Scientific Review Branch, P.O. Box 12233, Research Triangle Park, NC 27709, (919) 541–1446, *eckertt1@niehs.nih.gov.*

Name of Committee: National Institute of Environmental Health Sciences Special Emphasis Panel, Mitochondrial and Nuclear Induced Cross-Talk Perturbations in Response to Environmental Insults.

Date: December 4–5, 2014.

Time: 8:00 a.m. to 3:00 p.m.

Agenda: To review and evaluate grant applications.

Place: Sheraton Imperial Hotel, 4700 Emperor Boulevard, Durham, NC 27703.

Contact Person: Leroy Worth, Ph.D., Scientific Review Officer, Scientific Review Branch, Division of Extramural Research and Training, Nat. Institute of Environmental Health Sciences, P. O. Box 12233, MD EC–30/Room 3171, Research Triangle Park, NC 27709, 919/541–0670 *worth@niehs.nih.gov.*

(Catalogue of Federal Domestic Assistance Program Nos. 93.115, Biometry and Risk Estimation—Health Risks from Environmental Exposures; 93.142, NIEHS Hazardous Waste Worker Health and Safety Training; 93.143, NIEHS Superfund Hazardous Substances—Basic Research and Education; 93.894, Resources and Manpower Development in the Environmental Health Sciences; 93.113, Biological Response to Environmental Health Hazards; 93.114, Applied Toxicological Research and Testing, National Institutes of Health, HHS)

Dated: November 6, 2014.

Carolyn Baum,

Program Analyst, Office of Federal Advisory Committee Policy.

[FR Doc. 2014–26909 Filed 11–13–14; 8:45 am]

BILLING CODE 4140–01–P

DEPARTMENT OF HEALTH AND HUMAN SERVICES

National Institutes of Health

National Institute of Diabetes and Digestive and Kidney Diseases; Notice of Closed Meeting

Pursuant to section 10(d) of the Federal Advisory Committee Act, as amended (5 U.S.C. App.), notice is hereby given of the following meeting.

The meeting will be closed to the public in accordance with the provisions set forth in sections 552b(c)(4) and 552b(c)(6), Title 5 U.S.C., as amended. The grant applications and the discussions could disclose confidential trade secrets or commercial property such as patentable material, and personal information concerning individuals associated with the grant applications, the disclosure of which would constitute a clearly unwarranted invasion of personal privacy.

Name of Committee: National Institute of Diabetes and Digestive and Kidney Diseases Special Emphasis Panel, PAR12–265 Ancillary Clinical Studies in Diabetes Complications.

Date: December 11, 2014.

Time: 2:00 p.m. to 4:00 p.m.

Agenda: To review and evaluate grant applications.

Place: National Institutes of Health, Two Democracy Plaza, 6707 Democracy Boulevard, Bethesda, MD 20892, (Telephone Conference Call).

Contact Person: ANN A. JERKINS, Ph.D., SCIENTIFIC REVIEW OFFICER, REVIEW BRANCH, DEA, NIDDK, NATIONAL INSTITUTES OF HEALTH, ROOM 759, 6707 DEMOCRACY BOULEVARD, BETHESDA, MD 20892–5452, 301–594–2242, *jerkinsa@niddk.nih.gov.*

(Catalogue of Federal Domestic Assistance Program Nos. 93.847, Diabetes, Endocrinology and Metabolic Research; 93.848, Digestive Diseases and Nutrition Research; 93.849, Kidney Diseases, Urology and Hematology Research, National Institutes of Health, HHS).

Dated: November 7, 2014.

David Clary,

Program Analyst, Office of Federal Advisory Committee Policy.

[FR Doc. 2014–26908 Filed 11–13–14; 8:45 am]

BILLING CODE 4140–01–P

DEPARTMENT OF HEALTH AND HUMAN SERVICES

National Institutes of Health

National Library of Medicine; Notice of Closed Meeting

Pursuant to section 10(d) of the Federal Advisory Committee Act, as amended (5 U.S.C. App), notice is hereby given of the following meeting.

The meeting will be closed to the public in accordance with the provisions set forth in sections 552b(c)(4) and 552b(c)(6), Title 5 USC, as amended. The grant applications and the discussions could disclose confidential trade secrets or commercial property such as patentable materials, and personal information concerning individuals associated with the grant applications, the disclosure of which would constitute a clearly unwarranted invasion of personal privacy.

Name of Committee: National Library of Medicine Special Emphasis Panel; Conflicts R01/R21/K01.

Date: December 10, 2014.

Time: 12:00 p.m. to 3:30 p.m.

Agenda: To review and evaluate grant applications.

Place: National Library of Medicine, 6705 Rockledge Drive, Suite 301, Bethesda, MD 20817, (Telephone Conference Call).

Contact Person: Zoe E. Huang, MD, Scientific Review Officer, Extramural Programs, National Library of Medicine, NIH, 6705 Rockledge Drive, Suite 301, Bethesda, MD 20892–7968, 301–594–4937, *huangz@mail.nih.gov.*

(Catalogue of Federal Domestic Assistance Program No. 93.879, Medical Library Assistance, National Institutes of Health, HHS)

Dated: November 7, 2014.

Michelle Trout,

Program Analyst, Office of the Federal Advisory Committee Policy.

[FR Doc. 2014–26906 Filed 11–13–14; 8:45 am]

BILLING CODE 4140–01–P

DEPARTMENT OF HEALTH AND HUMAN SERVICES

National Institutes of Health

Center for Scientific Review; Notice of Closed Meetings

Pursuant to section 10(d) of the Federal Advisory Committee Act, as amended (5 U.S.C. App.), notice is hereby given of the following meetings.

The meetings will be closed to the public in accordance with the provisions set forth in sections 552b(c)(4) and 552b(c)(6), Title 5 U.S.C., as amended. The grant applications and the discussions could disclose confidential trade secrets or commercial property such as patentable material, and personal information concerning individuals associated with the grant applications, the disclosure of which would constitute a clearly unwarranted invasion of personal privacy.

Name of Committee: Center for Scientific Review Special Emphasis Panel; Member Conflict: Topics in Infectious Diseases.

Date: December 4, 2014.

Time: 11:00 a.m. to 3:00 p.m.

Agenda: To review and evaluate grant applications.

Place: National Institutes of Health, 6701 Rockledge Drive, Bethesda, MD 20892, (Virtual Meeting).

Contact Person: Liangbiao Zheng, Ph.D., Scientific Review Officer, Center for Scientific Review, National Institutes of Health, 6701 Rockledge Drive, Room 3202, MSC 7808, Bethesda, MD 20892, 301–996–5819, *zhengli@csr.nih.gov*.

Name of Committee: Center for Scientific Review Special Emphasis Panel; Synapses and Myelination.

Date: December 9, 2014.

Time: 1:00 p.m. to 4:00 p.m.

Agenda: To review and evaluate grant applications.

Place: National Institutes of Health, 6701 Rockledge Drive, Bethesda, MD 20892 (Telephone Conference Call).

Contact Person: Carole L Jelsema, Ph.D., Chief and Scientific Review Officer, Center for Scientific Review, National Institutes of Health, 6701 Rockledge Drive, Room 4176, MSC 7850, Bethesda, MD 20892, (301) 435–1248, *jelsemac@csr.nih.gov*.

Name of Committee: Center for Scientific Review Special Emphasis Panel; Biophysics.

Date: December 9, 2014.

Time: 12:00 p.m. to 2:30 p.m.

Agenda: To review and evaluate grant applications.

Place: National Institutes of Health, 6701 Rockledge Drive, Bethesda, MD 20892 (Telephone Conference Call).

Contact Person: Richard D Crosland, Ph.D., Scientific Review Officer, Center for Scientific Review, National Institutes of Health, 6701 Rockledge Drive, Room 4190, MSC 7850, Bethesda, MD 20892, 301–435–1220, *crosland@nih.gov*.

(Catalogue of Federal Domestic Assistance Program Nos. 93.306, Comparative Medicine; 93.333, Clinical Research, 93.306, 93.333, 93.337, 93.393–93.396, 93.837–93.844, 93.846–93.878, 93.892, 93.893, National Institutes of Health, HHS)

Dated: November 7, 2014.

Anna Snouffer,

Deputy Director, Office of Federal Advisory Committee Policy.

[FR Doc. 2014–26907 Filed 11–13–14; 8:45 am]

BILLING CODE 4140–01–P

DEPARTMENT OF HEALTH AND HUMAN SERVICES

National Institutes of Health

National Cancer Institute: Amended Notice of Meeting

Notice is hereby given of a change in the meeting of the National Cancer Advisory Board, December 01, 2014, 06:00 p.m. to December 02, 2014, 06:00 p.m., National Institutes of Health, Building 31, 31 Center Drive, Bethesda, MD, 20892 which was published in the **Federal Register** on November 03, 2014, 79FR65221.

This meeting is being amended to cancel the ad Hoc Subcommittee on Global Cancer Research meeting being held on December 1, 2014 from 06:00 p.m. to 07:30 p.m. The meeting is partially closed to the public.

Dated: November 10, 2014.

Melanie J. Gray,

Program Analyst, Office of Federal Advisory Committee Policy.

[FR Doc. 2014–27057 Filed 11–13–14; 8:45 am]

BILLING CODE 4140–01–P

DEPARTMENT OF HEALTH AND HUMAN SERVICES

National Institutes of Health

Center for Scientific Review; Notice of Closed Meetings

Pursuant to section 10(d) of the Federal Advisory Committee Act, as amended (5 U.S.C. App.), notice is hereby given of the following meetings.

The meetings will be closed to the public in accordance with the provisions set forth in sections 552b(c)(4) and 552b(c)(6), Title 5 U.S.C., as amended. The grant applications and the discussions could disclose confidential trade secrets or commercial property such as patentable material, and personal information concerning individuals associated with the grant applications, the disclosure of which would constitute a clearly unwarranted invasion of personal privacy.

Name of Committee: Center for Scientific Review Special Emphasis Panel; Fellowships: AIDS and AIDS Related Applications.

Date: November 18, 2014.

Time: 10:00 a.m. to 6:00 p.m.

Agenda: To review and evaluate grant applications.

Place: National Institutes of Health, 6701 Rockledge Drive, Bethesda, MD 20892.

Contact Person: Mary Clare Walker, Ph.D., Scientific Review Officer, Center for Scientific Review, National Institutes of Health, 6701 Rockledge Drive, Room 5208, MSC 7852, Bethesda, MD 20892, (301) 435–1165, *walkermc@csr.nih.gov.*

This notice is being published less than 15 days prior to the meeting due to the timing limitations imposed by the review and funding cycle.

Name of Committee: Center for Scientific Review Special Emphasis Panel; Member Conflict: Electrical Signaling, Ion Transport, and Arrhythmias.

Date: December 2, 2014.

Time: 1:00 p.m. to 5:00 p.m.

Agenda: To review and evaluate grant applications.

Place: National Institutes of Health, 6701 Rockledge Drive, Bethesda, MD 20892 (Telephone Conference Call).

Contact Person: Delvin Knight, Ph.D., Scientific Review Officer, Center for Scientific Review, National Institutes of Health, 6701 Rockledge Drive, Room 6194, MSC 4128, Bethesda, MD 20892–7814, 301–435–1850, *knightdr@csr.nih.gov*

Name of Committee: Center for Scientific Review Special Emphasis Panel; Mechanisms of Neurodegenerative and Neurometabolic Disease and Injury.

Date: December 9, 2014.

Time: 2:30 p.m. to 5:30 p.m.

Agenda: To review and evaluate grant applications.

Place: National Institutes of Health, 6701 Rockledge Drive, Bethesda, MD 20892 (Telephone Conference Call).

Contact Person: Christine A. Piggee, Ph.D., Scientific Review Officer, Center for Scientific Review, National Institutes of Health, 6701 Rockledge Drive, Room 4186, MSC 7850, Bethesda, MD 20892, 301–435–0657, *christine.piggee@nih.gov*.

Name of Committee: Center for Scientific Review Special Emphasis Panel; PAR Panel: Latent Tuberculosis in HIV Co-infection.

Date: December 12, 2014.

Time: 11:00 a.m. to 4:00 p.m.

Agenda: To review and evaluate grant applications.

Place: National Institutes of Health, 6701 Rockledge Drive, Bethesda, MD 20892 (Virtual Meeting).

Contact Person: Eduardo A. Montalvo, Ph.D., Scientific Review Officer, Center for Scientific Review, National Institutes of Health, 6701 Rockledge Drive, Room 5108, MSC 7852, Bethesda, MD 20892, (301) 435–1168, *montalve@csr.nih.gov.*

(Catalogue of Federal Domestic Assistance Program Nos. 93.306, Comparative Medicine; 93.333, Clinical Research, 93.306, 93.333, 93.337, 93.393–93.396, 93.837–93.844, 93.846–93.878, 93.892, 93.893, National Institutes of Health, HHS).

Dated: November 6, 2014.

Carolyn A. Baum,

Program Analyst, Office of Federal Advisory Committee Policy.

[FR Doc. 2014–26910 Filed 11–13–14; 8:45 am]

BILLING CODE 4140–01–P

DEPARTMENT OF HOMELAND SECURITY

U.S. Citizenship and Immigration Services

[OMB Control Number 1615–0100]

Agency Information Collection Activities: Request for the Return of Original Documents, Form G–884; Extension, Without Change, of a Currently Approved Collection

ACTION: 30-Day Notice.

SUMMARY: The Department of Homeland Security (DHS), U.S. Citizenship and Immigration Services (USCIS) will be submitting the following information collection request to the Office of Management and Budget (OMB) for review and clearance in accordance with the Paperwork Reduction Act of 1995. The information collection notice was previously published in the **Federal Register** on August 6, 2014, at 79 FR 45831, allowing for a 60-day public comment period. USCIS did not receive any comment(s) in connection with the 60-day notice.

DATES: The purpose of this notice is to allow an additional 30 days for public comments. Comments are encouraged and will be accepted until December 15, 2014. This process is conducted in accordance with 5 CFR 1320.10.

ADDRESSES: Written comments and/or suggestions regarding the item(s) contained in this notice, especially regarding the estimated public burden and associated response time, must be directed to the OMB USCIS Desk Officer via email at *oira_submission@omb.eop.gov.* Comments may also be submitted via fax at (202) 395–5806. All submissions received must include the agency name and the OMB Control Number 1615–0100.

You may wish to consider limiting the amount of personal information that you provide in any voluntary submission you make. For additional information please read the Privacy Act notice that is available via the link in the footer of *http://www.regulations.gov.*

SUPPLEMENTARY INFORMATION:

Comments

Note: The address listed in this notice should only be used to submit comments concerning this information collection. Please do not submit requests for individual case status inquiries to this address. If you are seeking information about the status of your individual case, please check ''My Case Status'' online at: *https://egov.uscis.gov/cris/Dashboard.do,* or call the USCIS National Customer Service Center at 1–800–375–5283.

Written comments and suggestions from the public and affected agencies should address one or more of the following four points:

(1) Evaluate whether the proposed collection of information is necessary for the proper performance of the functions of the agency, including whether the information will have practical utility;

(2) Evaluate the accuracy of the agency's estimate of the burden of the proposed collection of information, including the validity of the methodology and assumptions used;

(3) Enhance the quality, utility, and clarity of the information to be collected; and

(4) Minimize the burden of the collection of information on those who are to respond, including through the use of appropriate automated, electronic, mechanical, or other technological collection techniques or other forms of information technology, e.g., permitting electronic submission of responses.

Overview of This Information Collection

(1) *Type of Information Collection Request:* Extension, Without Change, of a Currently Approved Collection.

(2) *Title of the Form/Collection:* Request for the Return of Original Documents.

(3) *Agency form number, if any, and the applicable component of the DHS sponsoring the collection:* G–884; USCIS.

(4) *Affected public who will be asked or required to respond, as well as a brief abstract: Primary:* Individuals or households. The information will be used by USCIS to determine whether a person is eligible to obtain original documents(s) contained in an alien file.

(5) *An estimate of the total number of respondents and the amount of time estimated for an average respondent to respond:* The estimated total number of respondents for the information collection, G–884, is 7,500 and the estimated burden hours per response is 0.5 hours.

(6) *An estimate of the total public burden (in hours) associated with the collection:* The total estimated annual hour burden associated with this collection is 3,750 hours.

If you need a copy of the information collection instrument with supplementary documents, or need additional information, please visit *http://www.regulations.gov.* We may also be contacted at: USCIS, Office of Policy and Strategy, Regulatory Coordination Division, 20 Massachusetts Avenue NW., Washington, DC 20529–2134; Telephone 202–272–8377.

Dated: November 4, 2014.

Laura Dawkins,

Chief, Regulatory Coordination Division, Office of Policy and Strategy, U.S. Citizenship and Immigration Services, Department of Homeland Security.

[FR Doc. 2014–26926 Filed 11–13–14; 8:45 am]

BILLING CODE 9111–97–P

DEPARTMENT OF HOMELAND SECURITY

U.S. Citizenship and Immigration Services

[OMB Control Number 1615–0090]

Agency Information Collection Activities: Application for Status as Temporary Resident Under Section 245A of the INA, Form I–687; Form I–687WS; Extension, Without Change, of a Currently Approved Collection

ACTION: 30-Day notice.

SUMMARY: The Department of Homeland Security (DHS), U.S. Citizenship and Immigration Services (USCIS) will be submitting the following information collection request to the Office of Management and Budget (OMB) for review and clearance in accordance with the Paperwork Reduction Act of 1995. The information collection notice was previously published in the **Federal Register** on August 6, 2014, at 79 FR 45829, allowing for a 60-day public comment period. USCIS did not receive any comment(s) in connection with the 60-day notice.

DATES: The purpose of this notice is to allow an additional 30 days for public comments. Comments are encouraged and will be accepted until December 15,

2014. This process is conducted in accordance with 5 CFR 1320.10.

ADDRESSES: Written comments and/or suggestions regarding the item(s) contained in this notice, especially regarding the estimated public burden and associated response time, must be directed to the OMB USCIS Desk Officer via email at *oira_submission@omb.eop.gov.* Comments may also be submitted via fax at (202) 395–5806. All submissions received must include the agency name and the OMB Control Number 1615–0090.

You may wish to consider limiting the amount of personal information that you provide in any voluntary submission you make. For additional information please read the Privacy Act notice that is available via the link in the footer of *http://www.regulations.gov.*

SUPPLEMENTARY INFORMATION:

Comments:

Note: The address listed in this notice should only be used to submit comments concerning this information collection. Please do not submit requests for individual case status inquiries to this address. If you are seeking information about the status of your individual case, please check ''My Case Status'' online at: *https://egov.uscis.gov/cris/Dashboard.do,* or call the USCIS National Customer Service Center at 1–800–375–5283.

Written comments and suggestions from the public and affected agencies should address one or more of the following four points:

(1) Evaluate whether the proposed collection of information is necessary for the proper performance of the functions of the agency, including whether the information will have practical utility;

(2) Evaluate the accuracy of the agency's estimate of the burden of the proposed collection of information, including the validity of the methodology and assumptions used;

(3) Enhance the quality, utility, and clarity of the information to be collected; and

(4) Minimize the burden of the collection of information on those who are to respond, including through the use of appropriate automated, electronic, mechanical, or other technological collection techniques or other forms of information technology, e.g., permitting electronic submission of responses.

Overview of this Information Collection:

(1) *Type of Information Collection Request:* Extension, Without Change, of a Currently Approved Collection.

(2) *Title of the Form/Collection:* Application for Status as a Temporary Resident under Section 245A of the INA.

(3) *Agency form number, if any, and the applicable component of the DHS sponsoring the collection:* I–687; I–687WS; USCIS.

(4) *Affected public who will be asked or required to respond, as well as a brief abstract: Primary:* Individuals or households. The information collection on Form I–687 is required to verify the applicant's eligibility for temporary status, and if the applicant is deemed eligible, to grant the benefit sought.

(5) *An estimate of the total number of respondents and the amount of time estimated for an average respondent to respond:* The estimated total number of respondents for the information collection I–687 and I–687WS combined is 30 and the estimated hour burden per response is 1.167 hours. For the biometric collection that is a part of this information collection, the estimated total number of respondents is 30 and the estimated hour per response is 1.167 hours.

(6) *An estimate of the total public burden (in hours) associated with the collection:* The total estimated burden hour associated with this information collection is 70 hours.

If you need a copy of the information collection instrument with supplementary documents, or need additional information, please visit *http://www.regulations.gov.* We may also be contacted at: USCIS, Office of Policy and Strategy, Regulatory Coordination Division, 20 Massachusetts Avenue NW., Washington, DC 20529–2134; Telephone 202–272–8377.

Dated: November 4, 2014.

Laura Dawkins,

Chief, Regulatory Coordination Division, Office of Policy and Strategy, U.S. Citizenship and Immigration Services, Department of Homeland Security.

[FR Doc. 2014–26925 Filed 11–13–14; 8:45 am]

BILLING CODE 9111–97–P

DEPARTMENT OF HOMELAND SECURITY

U.S. Customs and Border Protection

Notice of Issuance of Final Determination Concerning Outdoor Unit

AGENCY: U.S. Customs and Border Protection, Department of Homeland Security.

ACTION: Notice of final determination.

SUMMARY: This document provides notice that U.S. Customs and Border Protection (''CBP'') has issued a final determination concerning the country of origin of Outdoor Units used in HVAC systems. Based upon the facts presented, CBP has concluded in the final determination that the U.S. is the country of origin of the Outdoor Units for purposes of U.S. Government procurement and country of origin marking.

DATES: The final determination was issued on November 7, 2014. A copy of the final determination is attached. Any party-at-interest, as defined in 19 CFR 177.22(d), may seek judicial review of this final determination on or before December 15, 2014.

FOR FURTHER INFORMATION CONTACT: Karen S. Greene, Valuation and Special Programs Branch: (202) 325–0041.

SUPPLEMENTARY INFORMATION: Notice is hereby given that on November 7, 2014, pursuant to subpart B of Part 177, Customs and Border Protection Regulations (19 CFR Part 177, subpart B), CBP issued a final determination concerning the country of origin of Outdoor Units, which may be offered to the U.S. Government under an undesignated government procurement contract. This final determination, in HQ H248850, was issued at the request of Mitsubishi Electric US Inc., under procedures set forth at 19 CFR Part 177, subpart B, which implements Title III of the Trade Agreements Act of 1979, as amended (19 U.S.C. 2511–18). In the final determination CBP concluded that, based upon the facts presented, the Outdoor Units were substantially transformed in the U.S. such that the U.S. is the country of origin of the Outdoor Units for purposes of U.S. Government procurement and country of origin marking.

Section 177.29, CBP Regulations (19 CFR 177.29), provides that a notice of final determination shall be published in the **Federal Register** within 60 days of the date the final determination is issued. Section 177.30, CBP Regulations (19 CFR 177.30), provides that any party-at-interest, as defined in 19 CFR 177.22(d), may seek judicial review of a final determination within 30 days of publication of such determination in the **Federal Register**.

Dated: November 7, 2014.

Glen E. Vereb,

Acting Executive Director, Regulations and Rulings, Office of International Trade.

Attachment

HQ H248850

November 7, 2014

OT:RR:CTF:VS H248850 KSG

Stuart P. Seidel, Esq.
Baker & McKenzie LLP
815 Connecticut Avenue NW.

Washington, DC 20006–4078

RE: Government Procurement; Country of Origin of Outdoor Unit of CITY MULTI VRF System; substantial transformation

Dear Mr. Seidel:

This is in response to your letter dated December 13, 2013, and additional submission and information dated May 12 and October 31, 2014, requesting a final determination on behalf of Mitsubishi Electric US, Inc. (''Mitsubishi''), pursuant to subpart B of part 177 of the U.S. Customs and Border Protection (''CBP'') Regulations (19 CFR Part 177). Under these regulations, which implement Title III of the Trade Agreements Act of 1979 (''TAA'') as amended (19 U.S.C. 2511 et seq.), CBP issues country of origin advisory rulings and final determinations as to whether an article is or would be a product of a designated country or instrumentality for the purposes of granting waivers of certain ''Buy American'' restrictions in U.S. law or practice for products offered for sale to the U.S. Government.

The final determination concerns the country of origin of an Outdoor Unit for a CITY MULTI Variable Refrigerant Flow (''VRF'') multi-split heating, ventilation and air conditioning system (''HVAC System''). We note that as a U.S. importer, Mitsubishi is a party-at-interest within the meaning of 19 CFR 177.22(d)(1) and is entitled to request this final determination. A conference was held on this matter on April 8, 2014.

FACTS:

The HVAC System is comprised of Outdoor Units; Indoor Units; Branch Circuit (BC) Controllers; system controllers; and vertical air handlers. This final determination pertains to the Outdoor Units of the system. You listed various types of Outdoor Units, including the R2 Series, the Y Series, the H2i hyper–Heat Series, the WY Series, and the WR2 Series.

In the U.S., the base from Japan is unpacked. The base pan contains the compressor and accumulator. An appropriate flat heat exchanger (HEX) with aluminum fins and copper tubing and copper headers is selected for the particular Outdoor Unit and the HEX is moved with a mechanical lift to coil bending equipment. The HEX is placed in coil bending equipment to form the coil with two 90 degree bends. The HEX is then removed from the bender and positioned on the base pan. Some Outdoor Units utilize two coils and each must be formed before being placed on the unit base pan. The refrigerant tubing from the headers of the HEX is connected to the refrigerant tubing on the unit base connecting compressors, reversing valves, the accumulator and other components depending on the model type. The tubing is filled with nitrogen. The six to ten connections between the refrigerant tubing from the headers on the HEX are brazed to the refrigerant tubing on the base unit. The unit is moved into a leak test chamber to test for leaks. Photographs which show the complex machinery and segments involved in the HEX bending and brazing processes were submitted.

Although there are various types of Outdoor Units, you state that in the U.S., the fan motor, fan, fan-motor mount, unit top panel, fan orifice, and fan guard cover are installed onto the unit base. The vacuum pump is also attached to the unit process tube. Next, an appropriate control box is placed into the programming fixture. The compressor, outdoor fan motor, reversing valve, pressure switches and sensors are wired to the appropriate location in the control box. Software is loaded onto the printed circuit board (PCB) which separates the PCB specification for Y Series and R2 Series Outdoor Units. It is stated that the software used for the Outdoor Unit was developed in the U.S.

Various tests are performed to ensure the Outdoor Unit functions. You have provided the costs of the various materials and labor used to produce the Outdoor Units in Japan and the U.S.

The mechanical contractor brings all the components of the system together to install them as laid out by the design engineer. The Outdoor Unit itself is ground or roof mounted and is connected to the BC Controller.

ISSUE:

What is the country of origin of the Outdoor Unit for U.S. Government procurement and country of origin marking.

LAW AND ANALYSIS:

Pursuant to subpart B of part 177, 19 CFR 177.21 *et seq.,* which implements Title III of the Trade Agreements Act of 1979, as amended (19 U.S.C. 2511 *et seq.*), CBP issues country of origin advisory rulings and final determinations as to whether an article is or would be a product of a designated country or instrumentality for the purposes of granting waivers of certain ''Buy American'' restrictions in U.S. law or practice for products offered for sale to the U.S. Government.

Under the rule of origin set forth under 19 U.S.C. 2518(4)(B):

An article is a product of a country or instrumentality only if (i) it is wholly the growth, product, or manufacture of that country or instrumentality, or (ii) in the case of an article which consists in whole or in part of materials from another country or instrumentality, it has been substantially transformed into a new and different article of commerce with a name, character, or use distinct from that of the article or articles from which it was so transformed.

See also 19 CFR 177.22(a).

In rendering advisory rulings and final determinations for purposes of U.S. government procurement, CBP applies the provisions of subpart B of Part 177 consistent with the Federal Acquisition Regulations. *See* 19 CFR 177.21. In this regard, CBP recognizes that the Federal Acquisition Regulations restrict the U.S. Government's purchase of products to U.S.-made or designated country end products for acquisitions subject to the TAA. *See* 48 CFR 25.403(c)(1). The Federal Acquisition Regulations define ''U.S.-made end product'' as:

. . .an article that is mined, produced, or manufactured in the United States or that is substantially transformed in the United States into a new and different article of commerce with name, character, or use distinct from that of the article or articles from which it was transformed.

48 CFR 25.003.

In order to determine whether a substantial transformation occurs when components of various origins are assembled into completed products, CBP considers the totality of the circumstances and makes such determinations on a case-by-case basis. The country of origin of the item's components, extent of the processing that occurs within a country, and whether such processing renders a product with a new name, character, and use are primary considerations in such cases. Additionally, factors such as the resources expended on product design and development, the extent and nature of post-assembly inspection and testing procedures, and the degree of skill required during the manufacturing process may be relevant when determining whether a substantial transformation has occurred. No one factor is determinative. The same standard is applicable to determinations of the country of origin for marking purposes under 19 U.S.C. 1304.

In determining whether the combining of parts or materials constitutes a substantial transformation, the determinative issue is the extent of operations performed and whether the parts lose their identity and become an integral part of the new article. *Belcrest Linens v. United States,* 573 F. Supp. 1149 (CIT 1983), *aff'd* 741 F. 2d 1368 (Fed. Cir. 1984). Assembly operations that are minimal or simple, as opposed to complex or meaningful, will generally not result in a substantial transformation. In *Carlson Furniture Industries v. United States,* 65 Cust. Ct 474 (1970), the U.S. Customs Court (predecessor to the U.S. Court of International Trade), held that the assembly of finished and unfinished chair parts into finished chairs in the U.S. was a substantial transformation. The court did acknowledge that more than the assembly of chairs took place; the legs were cut to length and in some cases, the seats were upholstered.

It is your position that the country of origin of the Outdoor Unit is the U.S. because the final assembly in the U.S. is complex.

In New York Ruling Letter (NYRL) 808608 dated April 13, 1995, Customs considered whether imported heat exchanger cores were required to be individually marked with their country of origin if they were later processed in the U.S. by a U.S. manufacturer. The heat exchanger core was a heat exchanger subassembly constructed of 25 steel tubes with attached aluminum fins. The tubes were evacuated and filled with a small amount of water which made them into ''heat pipes'' (a two-phase heat transfer system). The final subassembly had a protective aluminum housing that surrounded the fins. After importation into the U.S., two fans, a wire harness and a gasket were installed on the heat exchanger core. The completed unit was then marketed as a cabinet cooler. It was determined that the imported heat exchanger cores were substantially transformed as a result of the U.S. processing, and therefore the U.S. manufacturer was the ultimate purchaser under 19 CFR 134.35.

We find that the processing in the U.S. of the Outdoor Unit is similar to the processes considered in NYRL 808608. Similar to NYRL 808608, the HEX is bent and assembled with the fan motor and vacuum pump to complete the Outdoor Unit. Substantial processing is performed in the U.S., including bending of the HEX, brazing of the various connections, and installation of the control box which includes software developed in the U.S. to complete the Outdoor Unit. We find that these are complex operations requiring skilled workers. Based on the totality of the circumstances, we find that the Outdoor Units are substantially transformed as a result of the processing in the U.S. Accordingly, we find that the Outdoor Unit may be considered a product of the U.S. for purposes of U.S. Government procurement.

Section 304 of the Tariff Act of 1930, as amended (19 U.S.C. 1304), provides that unless excepted, every article of foreign origin imported into the U.S. shall be marked in a conspicuous place as legibly, indelibly, and permanently as the nature of the article (or its container) will permit, in such a manner as to indicate to the ultimate purchaser in the U.S. the English name of the country of origin of the article. Congressional intent in enacting 19 U.S.C. 1304 was ''that the ultimate purchaser should be able to know by an inspection of the marking on the imported goods the country of which the goods is the product. The evident purpose is to mark the goods so that at the time of purchase the ultimate purchaser may, by knowing where the goods were produced, be able to buy or refuse to buy them, if such marking should influence his will.'' *United States v. Friedlaender & Co.,* 27 C.C.P.A. 297 at 302; C.A.D. 104 (1940).

Part 134, Customs Regulations (19 CFR Part 134), implements the country of origin marking requirements and the exceptions of 19 U.S.C. 1304. Section 134.1(b), Customs Regulations (19 CFR 134.1(b)), defines ''country of origin'' as the country of manufacture, production or growth of any article of foreign origin entering the U.S. Further work or material added to an article in another country must effect a substantial transformation in order to render such other country the ''country of origin'' within the meaning of the marking laws and regulations. The case of *United States v. Gibson-Thomsen Co., Inc.,* 27 C.C.P.A. 267 (C.A.D. 98) (1940), provides that an article used in manufacture which results in an article having a name, character or use differing from that of the constituent article will be considered substantially transformed. In such circumstances the U.S. manufacturer is the ultimate purchaser. The imported article is excepted from individual marking and only the outermost container is required to be marked. *See* 19 CFR 134.35.

As Mitsubishi Electric US, Inc. will be considered the ultimate purchaser of the Outdoor Units, the imported components used in the manufacture of the Outdoor Units may be excepted from country of origin marking, provided their outer containers in which they are imported are marked with their country of origin pursuant to 19 U.S.C. 1304(a)(3)(D).

HOLDING:

Based on the facts provided, the Outdoor Unit is considered a product of the U.S. for U.S. Government procurement purposes, and Mitsubishi Electric US, Inc. will be considered the ultimate purchaser of the Outdoor Unit.

Notice of this final determination will be given in the **Federal Register**, as required by 19 CFR 177.29. Any party-at-interest other than the party which requested this final determination may request, pursuant to 19 CFR 177.31, that CBP reexamine the matter a new and issue a new final determination. Pursuant to 19 CFR 177.30, any party-at-interest may, within 30 days after publication of the **Federal Register** notice referenced above, seek judicial review of this final determination before the Court of International Trade.

Sincerely,

Glen E. Vereb

Acting Executive Director, Regulations and Rulings Office of International Trade

[FR Doc. 2014–26955 Filed 11–13–14; 8:45 am]

BILLING CODE 9111–14–P

DEPARTMENT OF HOUSING AND URBAN DEVELOPMENT

[Docket No. FR–5750–N–46]

Federal Property Suitable as Facilities To Assist the Homeless

AGENCY: Office of the Assistant Secretary for Community Planning and Development, HUD.

ACTION: Notice.

SUMMARY: This Notice identifies unutilized, underutilized, excess, and surplus Federal property reviewed by HUD for suitability for use to assist the homeless.

FOR FURTHER INFORMATION CONTACT: Juanita Perry, Department of Housing and Urban Development, 451 Seventh Street SW., Room 7266, Washington, DC 20410; telephone (202) 402–3970; TTY number for the hearing- and speech-impaired (202) 708–2565 (these telephone numbers are not toll-free), or call the toll-free Title V information line at 800–927–7588.

SUPPLEMENTARY INFORMATION: In accordance with 24 CFR part 581 and section 501 of the Stewart B. McKinney Homeless Assistance Act (42 U.S.C. 11411), as amended, HUD is publishing this Notice to identify Federal buildings and other real property that HUD has reviewed for suitability for use to assist the homeless. The properties were reviewed using information provided to HUD by Federal landholding agencies regarding unutilized and underutilized buildings and real property controlled by such agencies or by GSA regarding its inventory of excess or surplus Federal property. This Notice is also published in order to comply with the December 12, 1988 Court Order in *National Coalition for the Homeless* v. *Veterans Administration,* No. 88–2503–OG (D.D.C.).

Properties reviewed are listed in this Notice according to the following categories: Suitable/available, suitable/unavailable, and suitable/to be excess, and unsuitable. The properties listed in the three suitable categories have been reviewed by the landholding agencies, and each agency has transmitted to HUD: (1) Its intention to make the property available for use to assist the homeless, (2) its intention to declare the property excess to the agency's needs, or (3) a statement of the reasons that the property cannot be declared excess or made available for use as facilities to assist the homeless.

Properties listed as suitable/available will be available exclusively for homeless use for a period of 60 days from the date of this Notice. Where property is described as for ''off-site use only'' recipients of the property will be required to relocate the building to their own site at their own expense. Homeless assistance providers interested in any such property should send a written expression of interest to HHS, addressed to Theresa Ritta, Ms. Theresa M. Ritta, Chief Real Property Branch, the Department of Health and Human Services, Room 5B–17, Parklawn Building, 5600 Fishers Lane, Rockville, MD 20857, (301) 443–6672 (This is not a toll-free number.) HHS will mail to the interested provider an application packet, which will include instructions for completing the application. In order to maximize the opportunity to utilize a suitable property, providers should submit their written expressions of interest as soon as possible. For complete details concerning the processing of applications, the reader is encouraged to refer to the interim rule governing this program, 24 CFR part 581.

For properties listed as suitable/to be excess, that property may, if subsequently accepted as excess by GSA, be made available for use by the homeless in accordance with applicable law, subject to screening for other Federal use. At the appropriate time, HUD will publish the property in a Notice showing it as either suitable/available or suitable/unavailable.

For properties listed as suitable/unavailable, the landholding agency has decided that the property cannot be declared excess or made available for use to assist the homeless, and the property will not be available.

Properties listed as unsuitable will not be made available for any other purpose for 20 days from the date of this Notice. Homeless assistance providers interested in a review by HUD of the determination of unsuitability should call the toll free information line at 1–800–927–7588 for detailed instructions or write a letter to Ann Marie Oliva at the address listed at the beginning of this Notice. Included in the request for review should be the property address (including zip code), the date of publication in the **Federal Register**, the landholding agency, and the property number.

For more information regarding particular properties identified in this Notice (i.e., acreage, floor plan, existing sanitary facilities, exact street address), providers should contact the appropriate landholding agencies at the following addresses: AIR FORCE: Mr. Robert E. Moriarty, P.E., AFCE/CI, 2261 Hughes Avenue, Ste. 155, JBSA Lackland, TX, 78236–9853, (210) 395–9503; COAST GUARD: Commandant, United States Coast Guard, Attn: Jennifer Stomber, 2100 Second St. SW., Stop 7901, Washington, DC 20593–0001; (202) 475–5609; COE: Ms. Brenda John-Turner, Army Corps of Engineers, Real Estate, HQUSACE/CEMP–CR, 441 G Street NW., Washington, DC 20314; (202) 761–5222; INTERIOR: Mr. Michael Wright, Acquisition & Property Management, Department of the Interior, 3960 N. 56th Ave. #104, Hollywood, FL 33021; (443) 223–4639; NASA: Mr. Frank T. Bellinger, Facilities Engineering Division, National Aeronautics & Space Administration, Code JX, Washington, DC 20546, (202) 358–1124; NAVY: Mr. Steve Matteo, Department of the Navy, Asset Management Division, Naval Facilities Engineering Command, Washington Navy Yard, 1330 Patterson Ave. SW., Suite 1000, Washington, DC 20374, (202) 685–9426; (These are not toll-free numbers).

Dated: November 6, 2014.

Brian P. Fitzmaurice,

Director, Division of Community Assistance, Office of Special Needs Assistance Programs.

TITLE V, FEDERAL SURPLUS PROPERTY PROGRAM FEDERAL REGISTER REPORT FOR 11/14/2014

Suitable/Available Properties

Building

Idaho

Building R0456032000B
3933 SV Hwy 26
Irwin ID 83428
Landholding Agency: Interior
Property Number: 61201440013
Status: Underutilized
Comments: off-site removal only; no future agency need; relocation may be difficult due to size/type; 385 sq. ft.; comfort station;57+ yrs.-old; fair conditions; leaky roof; mold; contact Interior for more info.

Massachusetts

3 Buildings
USCG Base Cape Cod
Bourne MA 02542
Landholding Agency: Coast Guard
Property Number: 88201440001
Status: Excess
Directions: 5206; 5412; 5386
Comments: off-site removal only; relocation may be difficult due to size/type; sq. ft. varies; housing; poor conditions; contact Coast Guard for more information.

Missouri

2 Restrooms
Mark Twain Lake Project Office
Monroe City MO 63456
Landholding Agency: COE
Property Number: 31201440007
Status: Underutilized
Comments: 62 & 72 sq. ft.; seasonal use; poor conditions; contact COE for more information.

Unsuitable Properties

Buildings

California

Buildings 2537, 2538, & 2540
6425 & 4790 B St./17430 Dolittle
Beale CA 95903
Landholding Agency: Air Force
Property Number: 18201440005
Status: Excess
Comments: public access denied and no alternative method to gain access w/out compromising national security.
Reasons: Secured Area

Building 1226
8464 Arnold
Beale CA 95903
Landholding Agency: Air Force
Property Number: 18201440006
Status: Unutilized
Comments: public access denied and no alternative method to gain access w/out compromising national security.
Reasons: Secured Area

Building 1152
Beale AFB
Beale CA 95903
Landholding Agency: Air Force
Property Number: 18201440007
Status: Unutilized
Comments: public access denied and no alternative method to gain access w/out compromising national security.
Reasons: Secured Area

6 Buildings
Wren & Tern Courts
Beale CA 95903
Landholding Agency: Air Force
Property Number: 18201440008
Status: Unutilized
Directions: 5109; 5110; 5111; 5112; 5113; 5116
Comments: public access denied and no alternative method to gain access w/out compromising national security.
Reasons: Secured Area

Security Station (#N253A)
700 R.T. Jones Rd.
Moffet Field CA 94035
Landholding Agency: NASA
Property Number: 71201440015
Status: Unutilized
Comments: public access denied and no alternative method to gain access w/out compromising national security.
Reasons: Secured Area

Missouri

U.S. Army Corps of Engineers,
St. Louis District
Wappapello Lake Project Office
Wappapello MO 63966
Landholding Agency: COE
Property Number: 31201440008
Status: Unutilized
Comments: entire property located in floodway where is has not been contained or corrected.
Reasons: Floodway

Virginia

Building 395
17320 Dahlgren Rd.
Dahlgren VA
Landholding Agency: Navy
Property Number: 77201440018
Status: Unutilized
Comments: public access denied and no alternative method to gain access w/out compromising national security.
Reasons: Secured Area

[FR Doc. 2014–26765 Filed 11–13–14; 8:45 am]

BILLING CODE 4210–67–P

DEPARTMENT OF THE INTERIOR

Office of the Secretary

[AAK6006201 1562100DD AOR3030.999900]

National Environmental Policy Act: Implementing Procedures; Additions to Categorical Exclusions for Bureau of Indian Affairs (516 DM 10)

AGENCY: Department of the Interior.

ACTION: Notice.

SUMMARY: This notice announces proposed additions to the categorical exclusions (CE) included in the Departmental Manual 516 DM 10. The three proposed CEs pertain to limited timber harvesting on Indian lands.

DATES: Comments are due by December 15, 2014.

ADDRESSES: Send comments to Marvin Keller, NEPA Coordinator—Bureau of Indian Affairs, 12220 Sunrise Valley Drive, Reston, VA 20191, email: *Marv.Keller@bia.gov.*

FOR FURTHER INFORMATION CONTACT: Marvin Keller, NEPA Coordinator—Indian Affairs, (406) 247–7963 or (703) 390–6470.

SUPPLEMENTARY INFORMATION:

Background

The National Environmental Policy Act (NEPA) requires Federal agencies to consider the potential environmental consequences of their decisions before deciding whether and how to proceed. The Council on Environmental Quality (CEQ) encourages Federal agencies to use categorical exclusions (CE) to protect the environment more efficiently by reducing the resources spent analyzing proposals which generally do not have potentially significant environmental impacts, thereby allowing those resources to be focused on proposals that may have significant environmental impacts. The appropriate use of categorical exclusions allow the NEPA review, in the absence of extraordinary circumstances that merit further consideration, to be concluded without preparing either an environmental assessment (EA) or an environmental impact statement (EIS) (40 CFR 1500.4(p) and 40 CFR 1508.4).

Harvesting timber on Indian lands, as defined in 25 CFR 163.1 allows landowners to realize value from lands held in trust for them by the Federal Government or subject to restrictions against alienation. The National Indian Forest Resources Management Act, and its implementing regulations, require the Secretary, with the participation of the landowners, to undertake forest land management activities on Indian forest lands, including the approval of timber harvests. As a result of the need for federal permits and contracts, such projects are federal actions that require compliance with the NEPA. The Bureau of Indian Affairs (BIA) has typically conducted NEPA reviews of actions associated with timber harvesting by preparing EAs. The addition of CEs to cover these three categories of small actions will allow for a more efficient NEPA review because those EAs resulted in findings of no significant impacts which were substantiated over time. The three proposed CEs were developed based on CEs currently used by the United States Forest Service (FS), as described in FS regulations 36 CFR 220, and adopted by the Bureau of Land Management (BLM), as described the Departmental Manual, 516 DM 11. The BIA relied on the experience of the FS and BLM and applied its expertise to benchmark these CEs and determined these are appropriate to establish as BIA CEs.

Proposed Categorical Exclusions

The Department of the Interior (DOI) proposes to add three CEs to the BIA chapter of the Departmental Manual 516 DM 10.5. The CEs are for limited timber harvest and cover the following actions: (1) Harvesting live trees not to exceed 70 acres, requiring no more than 0.5 mile of temporary road construction; (2) Salvaging dead or dying trees not to exceed 250 acres, requiring no more than 0.5 mile of temporary road construction; and (3) Commercial and non-commercial sanitation harvest to control insects or disease not to exceed 250 acres, requiring no more than 0.5 miles of temporary road construction. The intent of these CEs is to improve the efficiency of routine environmental review process for small scale timber projects on Indian land. Each proposed action must be reviewed for extraordinary circumstances that would preclude use of this categorical exclusion. The DOI list of extraordinary circumstances under which a normally excluded action would require further analysis and documentation in an EA or EIS is found at 43 CFR 46.215. If a proposed forest management project is within the activity described in one of these proposed CEs, then these 12 DOI listed ''extraordinary circumstances'' will be considered in the context of the proposed project to determine if they indicate the potential for effects that merit additional consideration in an EA or an EIS. If any of the DOI 12 extraordinary circumstances indicate such potential, the CE would not be used.

Analysis

The BIA forestry and environmental staff reviewed the NEPA procedures of both the BLM and the FS, who have similar forest management practices, which have similar environmental effects. The BIA, BLM, and FS often manage lands within the same landscape or watershed. Similar soils and climates on forest lands result in the agencies managing the same forest species. Each agency employs similar management policies with respect to meeting requirements for NEPA and other environmental statutes.

While the agencies have separate enabling legislation and missions, each requires that forest lands be managed according to sustainedyield and multiple use principles. The BIA has the additional responsibility of assisting their tribal partners in reaching their objectives of self-determination on Indian lands. As part of their land management responsibilities, the agencies are further required to meet the requirements of environmental laws including NEPA, Clean Water Act, Clean Air Act, Endangered Species Act, and the National Historic Preservation Act when making decisions. Additionally, regulations for each agency require preparation of forest or land management plans designed to achieve the goals and objectives of environmental laws and regulations prior to initiating actions such as those contained in these proposed CEs. The similarities of the forest management practices of the BIA, BLM, and FS, make the adoption of the CEs a logical step to ensure consistency in NEPA compliance across the three agencies. The review for extraordinary circumstances, which BIA normally conducts for all CEs, ensures that measures would continue to be taken to identify and reduce any significant impacts.

The BIA review team examined previous analyses conducted by FS and BLM when they developed their CEs. The FS revised its NEPA procedures to include these three CEs on July 29, 2003. The FS codified its NEPA procedures on July 24, 2008, and the CEs are now included in 36 CFR Section 220.6. The BLM reviewed the FS administrative record that was relied upon when the FS changed its NEPA procedures and adopted the same three CEs on August 4, 2007.

The BLM and FS found that the three categories of actions covered by the CEs do not individually or cumulatively have significant effects on the human environment. The BLM and FS findings were predicated on data representing the expert judgment of the responsible officials who made the original findings and determinations for the 154 FS projects reviewed, the resource specialists who validated the predicted effects of the 154 reviewed activities after the projects were completed, and a belief that the profile of past timber harvest activities drawn from their database represented the agency's past practices and was indicative of their future activities. Following the CEQ guidance published in the **Federal Register** on December 6, 2010, the BIA analyzed the FS information, as well as the review conducted by BLM, and determined that based on the comparability of the actions the expected effects of BIA forestry activities should be comparable to those of the FS and BLM.

Public Comments

To be considered, any comments on this proposed addition to the list of categorical exclusions in the Departmental Manual must be received by the date listed in the **DATES** section of this notice at the location listed in the **ADDRESSES** section. Comments received after that date will be considered only to the extent practicable. Comments, including names and addresses of respondents, will be part of the public

record and available for public review at the BIA address shown in the **ADDRESSES** section, during business hours, 8 a.m. to 4:30 p.m., Monday through Friday, except holidays. Before including your address, telephone number, email address, or other personal identifying information in your comment, you should be aware that your entire comment—including your personal identifying information—may be made publicly available at any time. While you can ask us in your comment to withhold your personal identifying information from public review, we cannot guarantee that we will be able to do so.

Text of Proposed Addition to 516 DM 10

10.5 Categorical Exclusions

H. Forestry.

(11) Harvesting live trees not to exceed 70 acres, requiring no more than 0.5 mile of temporary road construction. Such activities:

(a) Shall not include even-aged regeneration harvests or vegetation type conversions.

(b) May include incidental removal of trees for landings, skid trails, and road clearing.

(c) May include temporary roads which are defined as roads authorized by contract, permit, lease, other written authorization, or emergency operation not intended to be part of the BIA or Tribal transportation systems and not necessary for long-term resource management. Temporary roads shall be designed to standards appropriate for the intended uses, considering safety, cost of transportation, and impacts on land and resources and

(d) Shall require the treatment of temporary roads constructed or used so as to permit the reestablishment by artificial or natural means, of vegetative cover on the roadway and areas where the vegetative cover was disturbed by the construction or use of the road, as necessary to minimize erosion from the disturbed area. Such treatment shall be designed to reestablish vegetative cover as soon as practicable, but at least within 10 years after the termination of the contract.

Examples include, but are not limited to:

(a) Removing individual trees for sawlogs, specialty products, or fuelwood.

(b) Commercial thinning of overstocked stands to achieve the desired stocking level to increase health and vigor.

(12) Salvaging dead or dying trees not to exceed 250 acres, requiring no more than 0.5 mile of temporary road construction. Such activities:

(a) May include incidental removal of live or dead trees for landings, skid trails, and road clearing.

(b) May include temporary roads which are defined as roads authorized by contract, permit, lease, other written authorization, or emergency operation not intended to be part of the BIA or Tribal transportation systems and not necessary for long-term resource management. Temporary roads shall be designed to standards appropriate for the intended uses, considering safety, cost of transportation, and impacts on land and resources and

(c) Shall require the treatment of temporary roads constructed or used so as to permit the reestablishment, by artificial or natural means, of vegetative cover on the roadway and areas where the vegetative cover was disturbed by the construction or use of the road, as necessary to minimize erosion from the disturbed area. Such treatment shall be designed to reestablish vegetative cover as soon as practicable, but at least within 10 years after the termination of the contract.

(d) For this CE, a dying tree is defined as a standing tree that has been severely damaged by forces such as fire, wind, ice, insects, or disease, such that in the judgment of an experienced forest professional or someone technically trained for the work, the tree is likely to die within a few years.

Examples include, but are not limited to:

(a) Harvesting a portion of a stand damaged by a wind or ice event.

(b) Harvesting fire damaged trees.

(13) Commercial and non-commercial sanitation harvest of trees to control insects or disease not to exceed 250 acres, requiring no more than 0.5 miles of temporary road construction. Such activities:

(a) May include removal of infested/infected trees and adjacent live uninfested/uninfected trees as determined necessary to control the spread of insects or disease and

(b) May include incidental removal of live or dead trees for landings, skid trails, and road clearing.

(c) May include temporary roads which are defined as roads authorized by contract, permit, lease, other written authorization, or emergency operation not intended to be part of the BIA or tribal transportation systems and not necessary for long-term resource management. Temporary roads shall be designed to standards appropriate for the intended uses, considering safety, cost of transportation, and impacts on land and resources and

(d) Shall require the treatment of temporary roads constructed or used so as to permit the reestablishment, by artificial or natural means, of vegetative cover on the roadway and areas where the vegetative cover was disturbed by the construction or use of the road, as necessary to minimize erosion from the disturbed area. Such treatment shall be designed to reestablish vegetative cover as soon as practicable, but at least within 10 years after the termination of the contract.

Examples include, but are not limited to:

(a) Felling and harvesting trees infested with mountain pine beetles and immediately adjacent uninfested trees to control expanding spot infestations (a buffer) and

(b) Removing or destroying trees infested or infected with a new exotic insect or disease, such as emerald ash borer, Asian longhorned beetle, or sudden oak death pathogen.

Dated: October 29, 2014.

Willie R. Taylor,

Director, Office of Environmental Policy and Compliance.

[FR Doc. 2014–27015 Filed 11–13–14; 8:45 am]

BILLING CODE 4310–W7–P

DEPARTMENT OF THE INTERIOR

Fish and Wildlife Service

[FWS–R1–ES–2014–N131; FXES11120100000–145–FF01E00000]

Draft Multi-Species General Conservation Plan and Draft Environmental Assessment; Douglas County, Washington

AGENCY: Fish and Wildlife Service, Interior.

ACTION: Notice of availability; request for comments.

SUMMARY: We, the U.S. Fish and Wildlife Service (Service), announce the availability of a draft multi-species general conservation plan (MSGCP) for Douglas County, Washington. The Service and the Foster Creek Conservation District (FCCD) developed the draft MSGCP as a programmatic approach to streamline the development of individual farm plans by non-Federal agricultural landowners and operators to facilitate their applying for incidental take permits (ITPs) under the Endangered Species Act of 1973, as amended (Act). The ITPs would authorize take of the federally endangered Columbia Basin pygmy rabbit and three other nonlisted species, should they become listed, resulting from otherwise lawful activities on non-

Federal agricultural lands within Douglas County. The Service also announces the availability of a draft environmental assessment (EA) for public review and comment.

DATES: To ensure consideration, please send your written comments by January 13, 2015.

ADDRESSES: To request further information or submit written comments, please use one of the following methods, and note that your information request or comments are in reference to the Douglas County MSGCP:

- *Internet:* Documents may be viewed on the Internet at *http://www.fws.gov/wafwo/.*
- *In-Person Viewing or Pickup:* Documents will be available for public inspection by appointment during normal business hours at the U.S. Fish and Wildlife Service's Eastern Washington Field Office, 11103 E. Montgomery Dr., Spokane Valley, WA 99206; and at the Foster Creek Conservation District Office, Douglas County Courthouse–3rd Floor, 203 Rainier, Waterville, WA 98858.
- *Email: FW1DouglasCountyGCP@fws.gov.* Include ''Douglas County MSGCP'' in the subject line of the message.
- *U.S. Mail:* U.S. Fish and Wildlife Service, Eastern Washington Field Office, 11103 E. Montgomery Dr., Spokane Valley, WA 99206.
- *Fax:* Eastern Washington Field Office, 509–891–6748, Attn.: Douglas County MSGCP.

FOR FURTHER INFORMATION CONTACT: Michelle Eames, Project Manager, Eastern Washington Field Office (see **ADDRESSES**), telephone: 509–893–8010. If you use a telecommunications device for the deaf, please call the Federal Information Relay Service at 800–877–8339.

SUPPLEMENTARY INFORMATION:

Background

Section 9 of the Endangered Species Act of 1973, as amended (Act; 16 U.S.C. 1531 *et seq.*) prohibits take of fish and wildlife species listed as endangered or threatened under section 4 of the Act. Under the Act, the term ''take'' means to harass, harm, pursue, hunt, shoot, wound, kill, trap, capture, or collect, or to attempt to engage in any such conduct (16 U.S.C. 1532(19)). The term ''harm,'' as defined in our regulations, includes significant habitat modification or degradation that results in death or injury to listed species by significantly impairing essential behavioral patterns, including breeding, feeding, or sheltering (50 CFR 17.3). The term ''harass'' is defined in our regulations as to carry out actions that create the likelihood of injury to listed species to such an extent as to significantly disrupt normal behavioral patterns, which include, but are not limited to, breeding, feeding, or sheltering (50 CFR 17.3).

However, under specified circumstances, the Service may issue permits that allow take of federally listed species, provided that the take that occurs is incidental to, but not the purpose of, an otherwise lawful activity. Regulations governing permits for endangered and threatened species are at 50 CFR 17.22 and 17.32, respectively. Section 10(a)(1)(B) of the Act contains provisions for issuing such incidental take permits to non-Federal entities for the take of endangered and threatened species, provided the following criteria are met:

(1) The taking will be incidental;

(2) The applicant will, to the maximum extent practicable, minimize and mitigate the impact of such taking;

(3) The applicant will ensure that adequate funding for the plan will be provided;

(4) The taking will not appreciably reduce the likelihood of the survival and recovery of the species in the wild; and

(5) The applicant will carry out any other measures that the Service may require as being necessary or appropriate for the purposes of the plan.

Proposed Action

The Service and the FCCD developed the proposed MSGCP for Douglas County, Washington, as a programmatic approach to streamline the development of individual farm plans to support ITP applications under section 10(a)(1)(B) of the Act. The MSGCP would expedite Service review of such permit applications. The MSGCP is a type of programmatic conservation plan, under which multiple section 10 permits can be issued. The proposed MSGCP provides land management guidance for protecting the federally endangered Columbia Basin pygmy rabbit (*Brachylagus idahoensis*) and three nonlisted wildlife species, over approximately 879,000 acres of private agricultural lands in Douglas County, Washington, for the next 50 years. The three nonlisted species include the greater sage-grouse (*Centrocercus urophasianus*), Washington ground squirrel (*Urocitellus washingtoni*), and the sharp-tailed grouse (*Tympanuchus phasianellus*). Collectively these four species are hereafter referred to as the ''covered species.'' The MSGCP does not cover private, nonagricultural land uses within Douglas County, and it does not cover activities on Federal land. It also does not cover State-owned land, unless those lands are leased for agricultural production to private operators, as can occur with lands managed by the Washington Department of Natural Resources.

The Douglas County MSGCP will streamline the development of future ITP applications, which, if approved, would authorize the incidental take of federally endangered or threatened species resulting from otherwise lawful activities on non-Federal agricultural lands within Douglas County. Should any of the nonlisted covered species become federally listed as endangered or threatened under the Act during the term of an ITP, take authorization for those species would become effective upon listing, as long as the permittee is in compliance with the terms of the MSGCP and ITP. Agricultural landowners and operators participating in the Douglas County MSGCP under an ITP would be provided with legal authority to conduct covered agricultural activities that cause incidental take of listed species. The MSGCP covers numerous activities associated with dryland farming, ranching, and some irrigated farming in Douglas County. Farmers and ranchers in Douglas County may voluntarily apply for ITPs under the MSGCP. The Service will publish notice of the receipt of applications in the **Federal Register** and request public comments. If an application is consistent with expectations of the MSGCP, the EA and related documents and all other applicable Federal laws and regulations, the USFWS will issue the ITP. An ITP is needed to authorize the incidental take of federally endangered and threatened species that may occur as a result of covered agricultural activities.

The proposed Douglas County MSGCP includes measures to minimize and mitigate, to the maximum extent practicable, the impacts of farming and ranching activities that may incidentally take the covered species. Avoidance, minimization, and mitigation measures in the MSGCP include development of farm plans, implementation of best management practices, and an adaptive management and monitoring plan. The draft MSGCP and draft EA address and analyze the impacts of incidental take of the covered species resulting from agricultural activities.

The purpose of developing a MSGCP is to allow potential applicants for an ITP to use the provisions in the MSGCP instead of developing their own individual habitat conservation plans. Under this scenario, the MSGCP allows multiple applicants to conduct similar

activities within a predetermined area, while jointly conserving the covered species and their habitats. Implementation of the Douglas County MSGCP, rather than a species-by-species or plan-by-plan approach, will maximize the benefits of conservation measures for covered species at a larger landscape scale and facilitate future review of multiple individual ITPs.

National Environmental Policy Act Compliance

The development of the draft MSGCP for Douglas County and the proposed issuance of ITPs under this plan is a Federal action that triggers the need for compliance with the National Environmental Policy Act of 1969, as amended (42 U.S.C. 4321 *et seq.;* NEPA). We have prepared a draft EA to analyze the environmental impacts of three alternatives related to the issuance of ITPs and implementation of the conservation program under the proposed MSGCP. The three alternatives include the proposed action, a no-action alternative, and an expanded conservation lands alternative.

The proposed action alternative is the implementation of the MSGCP and issuance of ITPs to participating agricultural landowners and operators in Douglas County.

Under the no-action alternative, the proposed MSGCP would not be implemented and no ITPs would be issued to agricultural landowners and operators in Douglas County to cover the incidental take of covered species resulting from farming and ranching activities. The no-action alternative would not give agricultural landowners and operators regulatory certainty, and actions that could result in take of listed species on non-Federal lands would be prohibited under section 9 of the Act.

The expanded conservation lands alternative would include many of the same features as described for the proposed action alternative, including the same covered activities, covered species, and monitoring and adaptive management. The key difference would be in the approach to managing conservation lands. In recent years, the conservation of all wildlife species in Douglas County has been considerably improved by implementation of the Natural Resources Conservation Service's Conservation Reserve Program (CRP). Prior to 2009, about 33 percent of the ''eligible lands'' in Douglas County (186,144 acres) were enrolled in the CRP. This expanded conservation lands alternative involves an increase in the extent of lands enrolled in the CRP or similar protected lands by 100,000 acres above the 2009 benchmark of 186,144 acres over the next 10 years, to a level of about 50 percent of the eligible lands in Douglas County. This would be a voluntary commitment on the part of landowners.

Public Comments

You may submit your comments and materials by one of the methods listed in the **ADDRESSES** section. We specifically request information, views, and opinions from the public on our proposed Federal action, including identification of any other aspects of the human environment not already identified in the draft EA pursuant to NEPA regulations in the Code of Federal Regulations (CFR) at 40 CFR 1506.6. Further, we specifically solicit information regarding the adequacy of the MSGCP pursuant to the requirements for ITPs at 50 CFR parts 13 and 17.

Public Availability of Comments

All comments and materials we receive become part of the public record associated with this action. Before including your address, phone number, email address, or other personally identifiable information (PII) in your comments, you should be aware that your entire comment—including your PII—may be made publicly available at any time. While you can ask us in your comment to withhold your PII from public review, we cannot guarantee that we will be able to do so. Comments and materials we receive, as well as supporting documentation we use in preparing the EA, will be available for public inspection by appointment, during normal business hours, at our Eastern Washington Field Office (see **ADDRESSES**).

Next Steps

After completion of the EA, we will determine whether adoption of the Douglas County MSGCP warrants a finding of no significant impact or whether an environmental impact statement should be prepared. We will evaluate the Douglas County MSGCP and its potential use by future ITP applicants, as well as any comments we receive, to determine whether the MSGCP, when used by ITP applicants, would meet the requirements for issuance of ITPs under section 10(a)(1)(B) of the Act. We will also evaluate whether issuance of section 10(a)(1)(B) ITPs under the MSGCP would comply with section 7 of the Act by conducting an intra-Service section 7 consultation on anticipated ITP actions.

Authority

We provide this notice in accordance with the requirements of section 10 of the Act (16 U.S.C. 1531 *et seq.*) and NEPA regulations (40 CFR 1501.7, 1506.6, and 1508.22).

Dated: October 21, 2014.

Richard Hannan,

Deputy Regional Director, Pacific Region, U.S. Fish and Wildlife Service, Portland, Oregon.

[FR Doc. 2014–27021 Filed 11–13–14; 8:45 am]

BILLING CODE 4310–55–P

DEPARTMENT OF THE INTERIOR

Bureau of Indian Affairs

[DR.5B711.IA000815]

Indian Gaming

AGENCY: Bureau of Indian Affairs, Interior.

ACTION: Notice of extension of Tribal-State Class III Gaming Compact.

SUMMARY: This publishes notice of the extension of the Class III gaming compact between the Yankton Sioux Tribe and the State of South Dakota.

DATES: *Effective Date:* November 14, 2014.

FOR FURTHER INFORMATION CONTACT: Paula L. Hart, Director, Office of Indian Gaming, Office of the Deputy Assistant Secretary—Policy and Economic Development, Washington, DC 20240, (202) 219–4066.

SUPPLEMENTARY INFORMATION: Pursuant to 25 CFR 293.5, an extension to an existing tribal-state Class III gaming compact does not require approval by the Secretary if the extension does not include any amendment to the terms of the compact. The Yankton Sioux Tribe and the State of South Dakota have reached an agreement to extend the expiration of their existing Tribal-State Class III gaming compact to April 23, 2015. This publishes notice of the new expiration date of the compact.

Dated: November 4, 2014.

Kevin K. Washburn,

Assistant Secretary—Indian Affairs.

[FR Doc. 2014–27004 Filed 11–13–14; 8:45 am]

BILLING CODE 4310–4N–P

DEPARTMENT OF THE INTERIOR

Bureau of Indian Affairs

[AAK4000000 A0A3A0000.999900 13XA2100DD]

Privacy Act of 1974, as Amended; Notice To Amend an Existing System of Records

AGENCY: Bureau of Indian Affairs, Interior.

ACTION: Notice of amendment to an existing system of records.

SUMMARY: Pursuant to the provisions of the Privacy Act of 1974, as amended, the Department of the Interior is issuing a public notice of its intent to amend the Bureau of Indian Affairs Privacy Act system of records titled, Trust Asset and Accounting Management System—Interior, BIA–04. The amendment would update the system location, categories of individuals covered, categories of records, authority for maintenance, storage, safeguards, retention and disposal, system manager and address, notification procedures, records access and contesting procedures, records source categories. It would also update the routine uses to include activities related to land consolidation of fractionated lands. The system provides the Bureau of Indian Affairs and tribal users access to trust asset data and trust asset management tools to create, modify, and maintain records relating to land ownership, contracts and leases, and beneficial owners.

DATES: Comments must be received by December 24, 2014. The amendments to the system will be effective December 24, 2014.

ADDRESSES: Any person interested in commenting on this notice may do so by: Submitting comments in writing to Scott Christenson, Indian Affairs Acting Privacy Act Officer, 5600 American Boulevard West, Ste. 500, Bloomington, Minnesota 55437; hand-delivering comments to Scott Christenson, Indian Affairs Acting Privacy Act Officer, 5600 American Boulevard West, Ste. 500, Bloomington, Minnesota 55437; or emailing comments to *biaprivacy@bia.gov.*

FOR FURTHER INFORMATION CONTACT: Deputy Bureau Director, Bureau of Indian Affairs, Office of Trust Services, U.S. Department of the Interior, 1849 C Street NW., MS–4620–MIB, Washington, DC 20240, or by telephone at 202–208–5831.

SUPPLEMENTARY INFORMATION:

I. Background

The Department of the Interior (DOI), Bureau of Indian Affairs (BIA), maintains the ''Trust Asset and Accounting Management System—Interior, BIA–04,'' system of records. The purpose of this system is to provide BIA and Tribal users access to trust asset data and trust asset management tools to create, modify, and maintain records relating to land ownership, contracts and leases, and beneficial owners. The amendments to the system will include updating the system location, categories of individuals covered by the system, categories of records in the system, authority for maintenance of the system, storage, safeguards, retention and disposal, system manager and address, notification procedures, records access and contesting procedures, records source categories, and updating the routine uses to include activities related to land consolidation of fractionated lands. This system notice was last published in the **Federal Register** on February 27, 2007, 72 FR 8772–8776.

The amendments to the system will be effective as proposed at the end of the comment period (the comment period will end 40 days after the publication of this notice in the **Federal Register**), unless comments are received which would require a contrary determination. DOI will publish a revised notice if changes are made based upon a review of the comments received.

II. Privacy Act

The Privacy Act of 1974, as amended (5 U.S.C. 552a), embodies fair information practice principles in a statutory framework governing the means by which Federal Agencies collect, maintain, use, and disseminate individuals' personal information. The Privacy Act applies to records about individuals that are maintained in a ''system of records.'' A ''system of records'' is a group of any records under the control of an agency for which information is retrieved by the name of an individual or by some identifying number, symbol, or other identifying particular assigned to the individual. In the Privacy Act, an individual is defined as a U.S. citizen or lawful permanent resident. As a matter of policy, DOI extends administrative Privacy Act protections to all individuals. Individuals may request access to their own records that are maintained in a system of records in the possession or under the control of DOI by complying with DOI Privacy Act regulations, 43 CFR part 2.

The Privacy Act requires each agency to publish in the **Federal Register** a description denoting the type and character of each system of records that the agency maintains, the routine uses that are contained in each system in order to make agency record keeping practices transparent, to notify individuals regarding the uses of their records, and to assist individuals to more easily find such records within the agency. Below is the description of the Bureau of Indian Affairs, Trust Asset and Accounting Management System—Interior, BIA–04, system of records.

In accordance with 5 U.S.C. 552a(r), DOI has provided a report of this system of records to the Office of Management and Budget and to Congress.

III. Public Disclosure

Before including your address, phone number, email address, or other personal identifying information in your comment, you should be aware that your entire comment including your personal identifying information—may be made publicly available at any time. While you can ask us in your comment to withhold your personal identifying information from public review, we cannot guarantee that we will be able to do so.

Dated: November 10, 2014.

Teri Barnett,

DOI Privacy Act Officer.

SYSTEM NAME:

Trust Asset and Accounting Management System—Interior, BIA–04.

SECURITY CLASSIFICATION:

Unclassified.

SYSTEM LOCATION:

Records are maintained in office systems and databases at the Bureau of Indian Affairs, Office of Trust Services, U.S. Department of the Interior, 1849 C Street NW., Washington, DC 20240; other DOI program offices; BIA regional and field locations; and at DOI contractor facilities.

CATEGORIES OF INDIVIDUALS COVERED BY THE SYSTEM:

Individuals, non-Indians and Indians, and Indian tribal entities who are owners of land held in trust or restricted status by the Federal Government.

Individuals, non-Indians and Indian, Indian tribal entities, private businesses and financial institutions that have a permit, lease, contract, right-of-way, or other legal instrument approved by the Secretary of the Interior that allows them to use trust or restricted land, or to extract resources from the trust or restricted land.

This system may also contain information regarding DOI and BIA employees and officials who are acting in their official capacity to administer program activities, or who are involved in land title and resource management functions.

CATEGORIES OF RECORDS IN THE SYSTEM:

Records in this system include: (a) A legal land description, current ownership, probate and history of Indian trust lands, including title and beneficial ownership, and resources management, classification for all land held in trust or restricted status by the Federal Government for the benefit of Indian tribes and individual Indians; (b) any encumbrances against the title to land; (c) name, address, BIA identification number, phone number, information about parents of landowners for identification purposes, and Social Security number for each Indian or non-Indian land owner; (d) name, address, phone number and Federal tax identification number of each person or entity who has a permit, lease, contract, right-of-way, or other legal instrument approved by the Secretary of the Interior that allows such entity to use the trust or restricted land, or to extract renewable or non-renewable resources from such land; (e) name, address, phone number and Federal taxpayer identification number of any company that has a permit, lease, contract, right-of-way or other legal instrument approved by the Secretary of the Interior that allows such company to use the trust or restricted land or to extract renewable or nonrenewable resources from such land; (f) the term of the permit, lease, contract, right-of-way or other legal instrument; (g) records concerning individuals which have arisen as a result of that individual's receipt of overpayment(s) relative to land disposal, leases, sales and rentals; (h) the trust income collected and distributed for such permit, lease, contract, right-of-way or other legal instrument; and (i) official correspondence, appraisals, maps, purchase offers, and other documents related to land consolidation efforts or other program activities that may include name, address, email address, phone number, age, date of birth, Social Security number, Tribal enrollment number, BIA identification number, land ownership interests in restricted or fractioned lands, and other information related to these program activities.

AUTHORITY FOR MAINTENANCE OF THE SYSTEM:

25 CFR Part 150, Land records and title documents; 25 CFR Part 151, Land Acquisitions; 25 CFR Part 152, Issuance of patents in fee, certificates of competency, removal of restrictions, and sale of certain Indian lands; 25 U.S.C. 311 (The Act of March 3, 1901), 31 Stat. 1084, Public Law 56–382; 25 U.S.C. 393 (The Act of March 3, 1921), 41 Stat. 1232, Public Law. 66–359; 25 U.S.C. 2201 et. seq. (Indian Land Consolidation Act), 96 Stat. 2515, Public Law 97–459; 98 Stat. 3171, Public Law 98–608, Public Law 102–238; 25 U.S.C. 415 as amended by P.L. 112–151 (HEARTH Act of 2012); 43 U.S.C. 1601 (The Alaska Native Claims Settlement Act), 106 Stat. 2112–2125, Public Law 92–203; 25 U.S.C. 406 and 407 (The Act of June 25, 1910): 36 Stat. 857; 61–313, 78 Stat. 186–187; 25 U.S.C. 413 (The Act of February 14, 1920), 41 Stat. 415; 47 Stat. 1417; and 25 U.S.C. 2106 (Indian Mineral Development Act of 1982): 86 Stat. 1940, Public Law 97–382.

ROUTINE USES OF RECORDS MAINTAINED IN THE SYSTEM, INCLUDING CATEGORIES OF USERS AND THE PURPOSES OF SUCH USES:

TAAMS is the system of record for title and land resource management of Indian Trust and Restricted Land within the Department of the Interior (DOI) and the Bureau of Indian Affairs (BIA). TAAMS provides DOI and Tribal users access to trust asset data and trust asset management tools to create, modify and maintain records for land ownership, contracts, leases, and beneficial owners. TAAMS functionalities include title, leasing, accounting and reporting modules to maintain and track land title documents, contracts, right of way, revenue distributions, invoicing, collections, acquisitions, legal details relating to land transactions, receipt and distribution of trust funds, title status, owner inventory, chain of title, and oil and gas royalty distributions. TAAMS also supports DOI land consolidation activities, and provides an interface to Trust Funds Accounting System (TFAS), an accounting system used to meet DOI's fiduciary trust responsibilities to manage the receipt, investment, and disbursement of monies held in trust for individual Indians, Alaskan Natives, and Tribes.

In addition to those disclosures generally permitted under 5 U.S.C. 552a(b) of the Privacy Act, all or a portion of the records or information contained in this system may be disclosed outside DOI as a routine use pursuant to 5 U.S.C. 552a(b)(3) as follows:

(1)(a) To any of the following entities or individuals, when the circumstances set forth in paragraph (b) are met:

(i) The U.S. Department of Justice (DOJ);

(ii) A court or an adjudicative or other administrative body;

(iii) A party in litigation before a court or an adjudicative or other administrative body; or

(iv) Any DOI employee acting in his or her individual capacity if DOI or DOJ has agreed to represent that employee or pay for private representation of the employee;

(b) When:

(i) One of the following is a party to the proceeding or has an interest in the proceeding:

(A) DOI or any component of DOI;

(B) Any other Federal agency appearing before the Office of Hearings and Appeals;

(C) Any DOI employee acting in his or her official capacity;

(D) Any DOI employee acting in his or her individual capacity if DOI or DOJ has agreed to represent that employee or pay for private representation of the employee;

(E) The United States, when DOJ determines that DOI is likely to be affected by the proceeding; and

(ii) DOI deems the disclosure to be:

(A) Relevant and necessary to the proceeding; and

(B) Compatible with the purpose for which the records were compiled.

(2) To a congressional office in response to a written inquiry that an individual covered by the system, or the heir of such individual if the covered individual is deceased, has made to the office.

(3) To any criminal, civil, or regulatory law enforcement authority (whether Federal, state, territorial, local, tribal or foreign) when a record, either alone or in conjunction with other information, indicates a violation or potential violation of law—criminal, civil, or regulatory in nature, and the disclosure is compatible with the purpose for which the records were compiled.

(4) To an official of another Federal agency to provide information needed in the performance of official duties related to reconciling or reconstructing data files or to enable that agency to respond to an inquiry by the individual to whom the record pertains.

(5) To Federal, state, territorial, local, tribal, or foreign agencies that have requested information relevant or necessary to the hiring, firing or retention of an employee or contractor, or the issuance of a security clearance, license, contract, grant or other benefit, when the disclosure is compatible with the purpose for which the records were compiled.

(6) To representatives of the National Archives and Records Administration to

conduct records management inspections under the authority of 44 U.S.C. 2904 and 2906.

(7) To state, territorial and local governments, and tribal organizations to provide information needed in response to court order and/or discovery purposes related to litigation, when the disclosure is compatible with the purpose for which the records were compiled.

(8) To an expert, consultant, or contractor (including employees of the contractor) of DOI that performs services requiring access to these records on DOI's behalf to carry out the purposes of the system.

(9) To appropriate agencies, entities, and persons when:

(a) It is suspected or confirmed that the security or confidentiality of information in the system of records has been compromised; and

(b) The Department has determined that as a result of the suspected or confirmed compromise there is a risk of harm to economic or property interest, identity theft or fraud, or harm to the security or integrity of this system or other systems or programs (whether maintained by the Department or another agency or entity) that rely upon the compromised information; and

(c) The disclosure is made to such agencies, entities and persons who are reasonably necessary to assist in connection with the Department's efforts to respond to the suspected or confirmed compromise and prevent, minimize, or remedy such harm.

(10) To the Office of Management and Budget during the coordination and clearance process in connection with legislative affairs as mandated by OMB Circular A–19.

(11) To the Department of the Treasury to recover debts owed to the United States.

(12) To the news media and the public, with the approval of the Public Affairs Officer in consultation with Counsel and the Senior Agency Official for Privacy, where there exists a legitimate public interest in the disclosure of the information, except to the extent it is determined that release of the specific information in the context of a particular case would constitute an unwarranted invasion of personal privacy.

(13) To a consumer reporting agency if the disclosure requirements of the Debt Collection Act, as outlined at 31 U.S.C. 3711(e) (1), have been met.

(14) To any of the following entities or individuals, when the entity or individual makes a written request for names or mailing addresses of owners of any interest in trust or restricted lands, and information on the location of the parcel and the percentage of undivided interest owned by each individual:

(i) Other owners of interests in trust or restricted lands within the same reservation;

(ii) The tribe that exercises jurisdiction over the land where the parcel is located or any person who is eligible for membership in that tribe; and

(iii) Any person that is leasing, using, or consolidating, or is applying to lease, use, or consolidate, such trust or restricted land or the interest in trust or restricted lands.

(15) To Indian tribes entering into a contract or compacts of real estate or title functions under the Indian Self-Determination and Education Assistance Act, as amended.

(16) To Indian tribes (including tribal employees) that (1) operate, or are eligible to operate, land consolidation activities on behalf of the Department of the Interior (DOI), (2) agree to non-disclosure, and (3) submit a request in writing, upon a determination by the Department that such activities shall occur on the tribe's reservation and when the information relates to owners of fractionated land. Information disclosed may include but not be limited to the following:

(a) Contact information;

(b) Relevant personal characteristics of the owner, including age, tribal membership, and whether alive or deceased;

(c) Details regarding the type of ownership, such as the type of interest and whether the interest is purchasable; and

(d) Status information on or about transactions, such as whether an offer has been sent, accepted or rejected, and whether the owner is a willing seller.

DISCLOSURE TO CONSUMER REPORTING AGENCIES:

Pursuant to 5 U.S.C. 552a(b)(12), disclosures may be made to a consumer reporting agency as defined in the Fair Credit Reporting Act (15 U.S.C. 1681a(f)) or the Federal Claims Collection Act of 1996 (31 U.S.C. 3701(a)(3)).

POLICIES AND PRACTICES FOR STORING, RETRIEVING, ACCESSING, RETAINING AND DISPOSING OF RECORDS IN THE SYSTEM:

STORAGE:

Paper records are maintained in file folders stored in file cabinets, and electronic records are maintained in password-protected systems, removable drives, computer servers, email and databases, and on media such as magnetic disk, diskette, compact discs and computer tapes.

RETRIEVABILITY:

Records are retrieved using either: (a) An identifier linked to a parcel; (b) an identifier for a property interest owner, such as name, Social Security number, tribe, tribal enrollment number, or census number; or (c) identifiers linked to encumbrances on ownership such as mortgages and rights-of-way.

SAFEGUARDS:

Records are maintained in accordance with 43 CFR 2.226 and other applicable security and privacy policies and standards. Access to records is provided on a need-to-know basis only. During working hours, paper records are maintained in locked file cabinets under the control of authorized personnel.

Electronic records are safeguarded by permissions set to ''Authenticated Users'' which requires password login. The computer servers in which records are stored are located at a secured Department of the Interior and contractor facilities. Access to servers is granted to authorized personnel with the requisite security clearance and is based on business necessity in the performance of official duties. The Security Plan addresses the Department's Privacy Act safeguard requirements for Privacy Act systems at 43 CFR 2.226. A Privacy Impact Assessment was conducted to ensure that Privacy Act safeguard requirements are met. The assessment verified that appropriate controls and safeguards are in place. Personnel authorized to access the system must complete all Security, Privacy, and Records Management training and sign the Rules of Behavior.

RETENTION AND DISPOSAL:

Paper records are covered by Indian Affairs Records Schedule records series, 4600, and have been scheduled as permanent records under National Archives and Records Administration (NARA) Job No. N1–075–06–7, approved March 23, 2006 and NARA Job No. N1–075–04–4, approved November 21, 2003. Records are maintained for a maximum of 5 years or when no longer needed for current business operations and then retired to the American Indian Records Repository, which is a Federal Records Center. In accordance with the Indian Affairs Records Schedule, the subsequent legal transfer of records to the National Archives of the United States will be as jointly agreed to between the United States Department of the Interior and the NARA.

Electronic records in this system are covered by Indian Affairs Records Schedules records series 2200–TAAMS, and have been scheduled as permanent

records under NARA Job No. N1–075–09–8, approved on February 13, 2013. Records are maintained for a maximum of 2 years or when no longer needed for current business operations and then retired to the American Indian Records Repository.

SYSTEM MANAGER AND ADDRESS:

Deputy Bureau Director, Bureau of Indian Affairs, Office of Trust Services, U.S. Department of the Interior, 1849 C Street NW., MS 4620–MIB, Washington, DC 20240.

NOTIFICATION PROCEDURES:

An individual requesting notification of the existence of records on himself or herself should send a signed, written inquiry to the System Manager at the address identified above. To ensure proper handling of your request, the request envelope and letter should both be clearly marked ''PRIVACY ACT INQUIRY.'' A request for notification must meet the requirements of 43 CFR 2.235 and include the following information:

(a) Proof of your identity;

(b) List of all of the names by which you have been known, such as maiden name or alias;

(c) Your Social Security number;

(d) Mailing address;

(e) Tribe, tribal enrollment or census number;

(f) BIA home agency; and

(g) Time period(s) that records belonging to you may have been created or maintained, to the extent known by you.

RECORDS ACCESS PROCEDURES:

An individual requesting records on himself or herself should send a signed, written inquiry to the System Manager at the address identified above. To ensure proper handling of your request, the request envelope and letter should both be clearly marked ''PRIVACY ACT REQUEST FOR ACCESS.'' A request for access must meet the requirements of 43 CFR 2.238 and include the following information:

(a) Proof of your identity;

(b) List of all of the names by which you have been known, such as maiden name or alias;

(c) Your Social Security number;

(d) Mailing address;

(e) Tribe, tribal enrollment or census number;

(f) BIA home agency; and

(g) Time period(s) that records belonging to you may have been created or maintained, to the extent known by you.

Your request should specify whether you are seeking all of the records about you that may be maintained by the system, or only a specific portion of them. If you are only seeking a portion of them, you should describe those records you are seeking with sufficient detail to enable the records to be located with a reasonable amount of effort.

CONTESTING RECORDS PROCEDURES:

An individual requesting corrections or the removal of material from his or her records should send a signed, written inquiry to the System Manager at the address identified above. To ensure proper handling of your request, the request envelope and letter should both be clearly marked ''PRIVACY ACT REQUEST FOR AMENDMENT.'' A request for access must meet the requirements of 43 CFR 2.246 and include the following information:

(a) Proof of your identity;

(b) List of all of the names by which you have been known, such as maiden name or alias;

(c) Your Social Security number;

(d) Mailing address;

(e) Tribe, tribal enrollment or census number;

(f) BIA home agency; and

(g) Time period(s) that records belonging to you may have been created or maintained, to the extent known by you.

Before you make such a request, you must have requested access to your records and have either inspected them or obtained copies of them as described above. You must also identify which record or portion thereof you are contesting, indicate why you believe that it is not accurate, relevant, timely, or complete, and provide a copy of any documents in your possession that support your claim with your letter. You may also propose specific language to implement the changes sought.

RECORD SOURCE CATEGORIES:

Records in the system are obtained from: (a) DOI Bureaus and Offices including Bureau of Indian Affairs, Office of the Special Trustee for American Indians, Office of Natural Resources Revenue, Bureau of Land Management, Office of Hearings and Appeals, and other Bureaus and Office programs; (b) other Federal, state and local agencies; (c) Tribal offices if the title or realty function is contracted or compacted under the Indian Self Determination and Education Assistance Act, Public Law 93–638; (d) Courts of competent jurisdiction, including tribal courts; (e) private, financial and business institutions, and entities; and (f) correspondents, participants, beneficiaries, land owners, and members of the public.

EXEMPTIONS CLAIMED FOR THE SYSTEM:

None.

[FR Doc. 2014–27033 Filed 11–13–14; 8:45 am]

BILLING CODE 4334–12–P

DEPARTMENT OF THE INTERIOR

Bureau of Land Management

[LLNMP00000 L13110000.PP0000 15XL1109PF]

Notice of Public Meeting, Pecos District Resource Advisory Council Meeting, Lesser Prairie-Chicken Habitat Preservation Area of Critical Environmental Concern (LPC ACEC) Livestock Grazing Subcommittee, New Mexico

AGENCY: Bureau of Land Management, Interior.

ACTION: Notice of Public Meeting.

SUMMARY: In accordance with the Federal Land Policy and Management Act and the Federal Advisory Committee Act, Bureau of Land Management's (BLM) Pecos District Resource Advisory Council's (RAC) Lesser Prairie-Chicken (LPC) Habitat Preservation Area of Critical Environmental Concerns (ACEC) Livestock Grazing Subcommittee will meet as indicated below.

DATES: The LPC ACEC Subcommittee will meet on December 11, 2014, at 1:00 p.m. in the Roswell Field Office, 2909 West Second Street, Roswell, NM 88201. The public may send written comments to the Subcommittee at the BLM Pecos District Office, 2909 West 2nd Street, Roswell, New Mexico, 88201.

FOR FURTHER INFORMATION CONTACT: Adam Ortega, Range Management Specialist, Roswell Field Office, Bureau of Land Management, 2909 West 2nd Street, Roswell, New Mexico 88201, 575–627–0204. Persons who use a telecommunications device for the deaf (TDD) may call the Federal Information Relay Service (FIRS) at 1–800–877–8229 to contact the above individual during normal business hours. The FIRS is available 24 hours a day, 7 days a week, to leave a message or question with the above individual. You will receive a reply during normal business hours.

SUPPLEMENTARY INFORMATION: The 10-member Pecos District RAC elected to create a subcommittee to advise the Secretary of the Interior, through the BLM, about possible livestock grazing within the LPC ACEC. The planned

agenda includes a discussion of prescribed burning within the ACEC.

Michael H. Tupper,

Deputy State Director, Lands and Resources.

[FR Doc. 2014–27016 Filed 11–13–14; 8:45 am]

BILLING CODE 4310–FB–P

DEPARTMENT OF THE INTERIOR

National Park Service

[NPS–WASO–NRNHL–17080; PPWOCRADI0, PCU00RP14.R50000]

National Register of Historic Places; Notification of Pending Nominations and Related Actions

Nominations for the following properties being considered for listing or related actions in the National Register were received by the National Park Service before October 25, 2014. Pursuant to section 60.13 of 36 CFR Part 60, written comments are being accepted concerning the significance of the nominated properties under the National Register criteria for evaluation. Comments may be forwarded by United States Postal Service, to the National Register of Historic Places, National Park Service, 1849 C St. NW., MS 2280, Washington, DC 20240; by all other carriers, National Register of Historic Places, National Park Service, 1201 Eye St. NW., 8th Floor, Washington, DC 20005; or by fax, 202–371–6447. Written or faxed comments should be submitted by December 1, 2014. Before including your address, phone number, email address, or other personal identifying information in your comment, you should be aware that your entire comment—including your personal identifying information—may be made publicly available at any time. While you can ask us in your comment to withhold your personal identifying information from public review, we cannot guarantee that we will be able to do so.

Dated: October 31, 2014.

J. Paul Loether,

Chief, National Register of Historic Places/National Historic Landmarks Program.

ALABAMA

Jefferson County

Downtown Birmingham Historic District (Boundary Increase III), Portions of 1st, 2nd, 3rd, 4th, 5th, 20th, 22nd, 23rd, 24th & 25th Sts. N., Richard Arrington Jr. Blvd., Birmingham, 14001001

Powell Avenue Steam Plant, 1800 Powell Ave. S., Birmingham, 14001002

Limestone County

Cotton Hill, 23789 Huntsville-Brownsferry Rd. E., Athens, 14001003

Mobile County

Lafayette Heights Historic District, Bounded by Dr. Martin Luther King Jr. & Spring Hill Aves., Rylands & Basil Sts., Mobile, 14001004

Oakdale Historic District, Bounded by I–10, Preston Ave., Virginia & Ann Sts., Mobile, 14001005

IOWA

Kossuth County

Algona Junior and Senior High School Building and High School Building Annex, 213 & 301 S. Harlan St., Algona, 14001006

MICHIGAN

Mason County

Cartier, William A. and Catherine, House, 409 E. Ludington Ave., Ludington, 14001007

Monroe County

Wing—Allore House, 203 E. Elm Ave., Monroe, 14001008

Presque Isle County

ETRURIA (bulk freighter) Shipwreck Site, Address Restricted, Presque Isle, 14001009

M.F. MERRICK (schooner) Shipwreck Site, Address Restricted, Presque Isle, 14001010

Wayne County

Amity Lodge No. 335 Temple—Spiritual Israel Church and Its Army Temple, 9375 Amity St., Detroit, 14001011

NEBRASKA

Buffalo County

Lowe and Fair Commercial Bank, 2001–2003 Central Ave., 10–12 E. Railroad St., Kearney, 14001012

Hall County

Burlington Railroad Depot, 603 N. Plum St., Grand Island, 14001013

Lancaster County

Koop, Amel H., House, 1401 S. 15th St., Lincoln, 14001014

NEW MEXICO

Lincoln County

Hurd, Peter and Henriette Wyeth, House, 129 La Mancha Ln., San Patricio, 14001015

Jimenez, Luis A. and Susan B., House and Studios, Address Restricted, Hondo, 14001016

Los Alamos County

Bandelier National Monument Archeological and Historic District (Boundary Increase), Address Restricted, Los Alamos, 14001017

United States Post Office—Los Alamos, New Mexico, 199 Central Park Sq., Los Alamos, 14001018

NEW YORK

Delaware County

Maxbilt Theatre, 932 Main St., Fleischmanns, 14001019

Niagara County

Niagara Falls School District Administration Building, 607 Walnut St., Niagara Falls, 14001020

Schuyler County

Second Baptist Church of Wayne, 69 NY 230, Wayne, 14001021

NORTH CAROLINA

Ashe County

Cockerham Mill, 1580 Dog Creek Rd. Extension, Crumpler, 14001022

Wake County

Stevens, Wayland H. and Mamie Burt, House, (Wake County MPS) 408 N. Ennis St., Fuquay Varina, 14001023

Tucker, Garland Scott and Toler Moore, House, 418 N. Person St., Raleigh, 14001024

Wachovia Building Company Contemporary Ranch House, (Post-World War II and Modern Architecture in Raleigh, North Carolina 1945–1965 MPS) 823 Bryan St., Raleigh, 14001025

OKLAHOMA

Cleveland County

Union School District 19 1/2, SW. corner of 149th St. & S. Luther Rd., Newalla, 14001026

Muskogee County

Bacone College Historic District, Old Bacone Rd., Muskogee, 14001027

Oklahoma County

Main Street Arcade, 629 W. Main, Oklahoma City, 14001028

Miller's Boulevard Historic District, Bounded by NW. 16th St., W. Park Place, N. May & N. Villa Aves., Oklahoma City, 14001029

Town House Hotel, 627 Northwest 5th St., Oklahoma City, 14001031

Okmulgee County

Kennedy Mansion, 502 S. Okmulgee Ave., Okmulgee, 14001032

Payne County

Oklahoma A and M College Dairy Barn, 2624 W. McElroy Rd., Stillwater, 14001030

Tulsa County

Fox Hotel, 201 W. W.C. Rogers Blvd., Skiatook, 14001033

TENNESSEE

Knox County

Murphy Springs Farm, 4508 Murphy Rd., Knoxville, 14001034

TEXAS

Tarrant County

Sanger Brothers Building, 515 Houston St., Fort Worth, 14001035

VERMONT

Windsor County

Windsor Village Historic District (Boundary Increase II), Along Main & State Sts., Depot Ave., Village Green, Connecticut R., Paradise Park, Windsor, 14001036

A request for removal has been received for the following resource:

IOWA

Linn County

Bertram Bridge, Ely St. over Big Cr., Bertram, 14001006

[FR Doc. 2014–26928 Filed 11–13–14; 8:45 am]

BILLING CODE 4312–51–P

DEPARTMENT OF THE INTERIOR

Bureau of Reclamation

[RR83570000, 156R5065C6, RX.59389832.1009676]

Agency Information Collection Activities; Proposed Renewal of a Currently Approved Information Collection (OMB Control Number 1006–0003)

AGENCY: Bureau of Reclamation, Interior.

ACTION: Notice and request for comments.

SUMMARY: We, the Bureau of Reclamation, intend to seek approval of the following information collection set to expire on September 30, 2015: Bureau of Reclamation Use Authorization Application, 43 CFR 429 (Form 7–2540), OMB Control Number 1006–0003. Before submitting the information collection request to the Office of Management and Budget (OMB) for approval, we are soliciting comments on specific aspects of the information collection.

DATES: Submit written comments on this information collection request on or before January 13, 2015.

ADDRESSES: Send written comments to Greek Taylor, Bureau of Reclamation, Office of Policy and Administration, 84–57000, P.O. Box 25007, Denver, CO 80225–0007; or via email to *gtaylor@usbr.gov.*

FOR FURTHER INFORMATION CONTACT: Greek Taylor at (303) 445–2895.

SUPPLEMENTARY INFORMATION:

I. Abstract

The Bureau of Reclamation (Reclamation) is responsible for approximately 6.5 million acres of land which directly support Reclamation's Federal water projects in the 17 western states. Individuals or entities wanting to use Reclamation's lands, facilities, or waterbodies must submit an application to gain permission for such uses. Examples of such uses are:

—Agricultural uses such as grazing and farming;
—commercial or organized recreation and sporting activities;
—other commercial activities such as ''guiding and outfitting'' and ''filming and photography;'' and
—resource exploration and extraction, including sand and gravel removal and timber harvesting.

Reclamation reviews applications to determine whether granting individual use authorizations is compatible with Reclamation's present or future uses of the lands, facilities, or waterbodies. When we find a proposed use compatible, we advise the applicant of the estimated administrative costs and estimated application processing time. In addition to the administrative costs, we require the applicant to pay a use fee based on a valuation or by competitive bidding. If the application is for construction of a bridge, building, or other significant construction project, Reclamation may require that all plans and specifications be signed and sealed by a licensed professional engineer.

II. Data

OMB Control Number: 1006–0003.

Title: Bureau of Reclamation Use Authorization Application.

Form Number: Form 7–2540.

Frequency: Each time a use authorization is requested.

Respondents: Individuals, corporations, companies, and State and local entities who want to sue Reclamation lands, facilities, or waterbodies.

Estimated Annual Total Number of Respondents: 175.

Estimated Number of Responses per Respondent: 1.

Estimated Total Number of Annual Responses: 175.

Estimated Total Annual Burden on Respondents: 350 hours.

Estimated Completion Time per Respondent: 2 hours.

III. Request for Comments

We invite your comments on:

(a) Whether the collection of information is necessary for the proper performance of our functions, including whether the information will have practical use;

(b) The accuracy of our estimated time and cost burden of the collection of information, including the validity of the methodology and assumptions used;

(c) Ways to enhance the quality, usefulness, and clarity of the information to be collected; and

(d) Ways to minimize the burden of the collection of information on respondents, including increased use of automated collection techniques or other forms of information technology.

We will summarize all comments received regarding this notice. We will publish that summary in the **Federal Register** when the information collection request is submitted to OMB for review and approval.

Before including your address, phone number, email address, or other personal identifying information in your comment, you should be aware that your entire comment—including your personal identifying information—may be made publicly available at any time. While you can ask us in your comment to withhold your personal identifying information from public review, we cannot guarantee that we will be able to do so.

Dated: November 28, 2014.

Roseann Gonzales,

Director, Policy and Administration.

[FR Doc. 2014–27014 Filed 11–13–14; 8:45 am]

BILLING CODE 4332–90–P

DEPARTMENT OF THE INTERIOR

Office of Surface Mining Reclamation and Enforcement

[S1D1S SS08011000 SX066A000 67F 134S180110; S2D2S SS08011000 SX066A00 33F 13xs501520]

Notice of Proposed Information Collection; Request Comments for 1029–0047

AGENCY: Office of Surface Mining Reclamation and Enforcement, Interior.

ACTION: Notice and request for comments.

SUMMARY: In compliance with the Paperwork Reduction Act of 1995, the Office of Surface Mining Reclamation and Enforcement (OSMRE) has forwarded the information collection renewal request relating to the permanent program performance standards—surface mining activities and underground mining activities, to the Office of Management and Budget (OMB) for review and approval. The information collection request describes the nature of the information collection and the expected burden and cost. This information collection activity was previously approved by OMB and assigned control number 1029–0047.

DATES: OMB has up to 60 days to approve or disapprove the information collection but may respond after 30 days. Therefore, public comments should be submitted to OMB by December 15, 2014, in order to be assured of consideration.

ADDRESSES: Submit comments to the Office of Information and Regulatory Affairs, Office of Management and Budget, Attention: Department of the

Interior Desk Officer, by telefax at (202) 395–5806 or via email to *OIRA_Submission@omb.eop.gov.* Also, please send a copy of your comments to John Trelease, Office of Surface Mining Reclamation and Enforcement, 1951 Constitution Ave. NW., Room 203—SIB, Washington, DC 20240, or electronically to *jtrelease@osmre.gov.* Please refer to OMB Control Number 1029–0047 in your correspondence.

FOR FURTHER INFORMATION CONTACT: To receive a copy of the information collection request contact John Trelease at (202) 208–2783, or electronically at *jtrelease@osmre.gov.* You may also review this information collection request by going to *http://www.reginfo.gov* (Information Collection Review, Currently Under Review, Agency is Department of the Interior, DOI–OSMRE).

SUPPLEMENTARY INFORMATION: OMB regulations at 5 CFR 1320, which implement provisions of the Paperwork Reduction Act of 1995 (Pub. L. 104–13), require that interested members of the public and affected agencies have an opportunity to comment on information collection and recordkeeping activities [see 5 CFR 1320.8(d)]. OSMRE has submitted a request to OMB to renew its approval for the collection of information in 30 CFR parts 816 and 817—Permanent Program Performance Standards—Surface and Underground Mining Activities. OSMRE is requesting a 3-year term of approval for this information collection activity.

An agency may not conduct or sponsor, and a person is not required to respond to, a collection of information unless it displays a currently valid OMB control number. The OMB control number for this collection of information is 1029–0047.

As required under 5 CFR 1320.8(d), a **Federal Register** notice soliciting comments on this collection of information was published on August 5, 2014 (79 FR 45459). No comments were received. This notice provides the public with an additional 30 days in which to comment on the following information collection activities:

Title: 30 CFR 816 and 817—Permanent Program Performance Standards—Surface and Underground Mining Activities.

OMB Control Number: 1029–0047.

Summary: Sections 515 and 516 of the Surface Mining Control and Reclamation Act of 1977 provide that permittees conducting coal mining operations shall meet all applicable performance standards of the Act. The information collected is used by the regulatory authority in monitoring and inspecting surface coal mining activities to ensure that they are conducted in compliance with the requirements of the Act.

Bureau Form Number: None.

Frequency of Collection: Once, on occasion, and quarterly.

Description of Respondents: Coal mining operators and State regulatory authorities.

Total Annual Responses: 389,822 responses by the coal mining industry and 1,259 responses by State regulatory authorities.

Total Annual Burden Hours: 1,963,782.

Total Annual Non-Wage Burden Cost: $8,662,409.

Send comments on the need for the collection of information for the performance of the functions of the agency; the accuracy of the agency's burden estimates; ways to enhance the quality, utility and clarity of the information collection; and ways to minimize the information collection burden on respondents, such as use of automated means of collection of the information, to the addresses listed under **ADDRESSES**. Please refer to the appropriate OMB control number 1029–0047 in your correspondence.

Before including your address, phone number, email address, or other personal identifying information in your comment, you should be aware that your entire comment, including your personal identifying information, may be made publicly available at any time. While you can ask us in your comment to withhold your personal identifying information from public review, we cannot guarantee that we will be able to do so.

Dated: November 7, 2014.

Harry J. Payne,

Chief, Division of Regulatory Support.

[FR Doc. 2014–27005 Filed 11–13–14; 8:45 am]

BILLING CODE 4310–05–P

INTERNATIONAL TRADE COMMISSION

[Investigation No. 337–TA–912]

Certain Earpiece Devices Having Positioning and Retaining Structure and Components Thereof; Commission Decision Not To Review an Initial Determination Terminating the Investigation Based on a Settlement Agreement; Termination of the Investigation

AGENCY: U.S. International Trade Commission.

ACTION: Notice.

SUMMARY: Notice is hereby given that the U.S. International Trade Commission has determined not to review the presiding administrative law judge's (''ALJ'') initial determination (''ID'') (Order No. 16) terminating the investigation based on a settlement agreement.

FOR FURTHER INFORMATION CONTACT: Robert Needham, Office of the General Counsel, U.S. International Trade Commission, 500 E Street SW., Washington, DC 20436, telephone (202) 708–5468. Copies of non-confidential documents filed in connection with this investigation are or will be available for inspection during official business hours (8:45 a.m. to 5:15 p.m.) in the Office of the Secretary, U.S. International Trade Commission, 500 E Street SW., Washington, DC 20436, telephone (202) 205–2000. General information concerning the Commission may also be obtained by accessing its Internet server (*http://www.usitc.gov*). The public record for this investigation may be viewed on the Commission's electronic docket (EDIS) at *http://edis.usitc.gov.* Hearing-impaired persons are advised that information on this matter can be obtained by contacting the Commission's TDD terminal on (202) 205–1810.

SUPPLEMENTARY INFORMATION: The Commission instituted this investigation on April 3, 2014, based on a complaint filed on behalf of Bose Corporation of Framingham, Massachusetts (''Bose''). 79 FR 18696 (April 3, 2014). The complaint alleges violations of section 337 based upon the importation into the United States, the sale for importation, and the sale within the United States after importation of certain earpiece devices having positioning and retaining structure and components thereof by reason of infringement of certain claims of U.S. Patent No. 8,311,253. *Id.* The notice of investigation named as respondents Monster, Inc. of Brisbane, California; Monster, LLC of Las Vegas, Nevada; and Monster Technology International, Ltd. of Ennis, Ireland (collectively ''Monster''). *Id.* The Office of Unfair Import Investigations is not participating in this investigation. *Id.*

On October 24, 2014, Bose and Monster filed a joint motion to terminate the investigation based on a settlement agreement. The parties submitted the settlement agreement, and indicated that there are no other agreements, written or oral, express or implied, between the parties concerning the subject matter of this investigation. The parties also stated that terminating the investigation was in the public

interest to conserve the parties' and the Commission's resources.

On October 28, 2014, the ALJ issued the subject ID, granting the parties' motion and terminating the investigation. The ALJ found that the motion complied with the Commission's rules and that terminating the investigation was in the public interest. No petitions of the ID were filed.

The Commission has determined not to review the subject ID. This determination terminates the investigation, and renders moot the ALJ's initial determination on Monster's inequitable conduct defense. *See* Order No. 15 (Oct. 6, 2014).

The authority for the Commission's determination is contained in section 337 of the Tariff Act of 1930, as amended (19 U.S.C. 1337), and in Part 210 of the Commission's Rules of Practice and Procedure (19 CFR Part 210).

Issued: November 10, 2014.

By order of the Commission.

Lisa R. Barton,

Secretary to the Commission.

[FR Doc. 2014–26973 Filed 11–13–14; 8:45 am]

BILLING CODE 7020–02–P

INTERNATIONAL TRADE COMMISSION

[Investigation Nos. 337–TA–867/861 (Advisory Opinion Proceeding)]

Certain Cases for Portable Electronic Devices; Termination of an Advisory Opinion Proceeding

AGENCY: U.S. International Trade Commission.

ACTION: Notice.

SUMMARY: Notice is hereby given that the U.S. International Trade Commission has determined to terminate an advisory opinion proceeding in the above-captioned investigation.

FOR FURTHER INFORMATION CONTACT: Panyin A. Hughes, Office of the General Counsel, U.S. International Trade Commission, 500 E Street SW., Washington, DC 20436, telephone (202) 205–3042. Copies of non-confidential documents filed in connection with this investigation are or will be available for inspection during official business hours (8:45 a.m. to 5:15 p.m.) in the Office of the Secretary, U.S. International Trade Commission, 500 E Street SW., Washington, DC 20436, telephone (202) 205–2000. General information concerning the Commission may also be obtained by accessing its Internet server at *http://www.usitc.gov.* The public record for this investigation may be viewed on the Commission's electronic docket (EDIS) at *http://edis.usitc.gov.* Hearing-impaired persons are advised that information on this matter can be obtained by contacting the Commission's TDD terminal on (202) 205–1810.

SUPPLEMENTARY INFORMATION: The Commission instituted Inv. No. 337–TA–861 on November 16, 2012, based on a complaint filed by Speculative Product Design, LLC of Mountain View, California (''Speck''). 77 FR 68828 (Nov. 16, 2012). The complaint alleged violations of section 337 of the Tariff Act of 1930 (19 U.S.C. 1337) in the importation into the United States, the sale for importation, and the sale within the United States after importation of certain cases for portable electronic devices by reason of infringement of various claims of United States Patent No. 8,204,561 (''the '561 patent''). The complaint named several respondents.

The Commission instituted Inv. No. 337–TA–867 on January 31, 2013, based on a complaint filed by Speck. 78 FR 6834 (Jan. 31, 2013). That complaint also alleged violations of section 337 of the Tariff Act of 1930 (19 U.S.C. 1337) in the importation into the United States, the sale for importation, and the sale within the United States after importation of certain cases for portable electronic devices by reason of infringement of various claims of the '561 patent. The complaint named several respondents. On January 31, 2013, the Commission consolidated the two investigations. *Id.*

All the participating respondents were terminated from the consolidated investigations as a result of settlement agreements, consent motion stipulations, or withdrawal of the complaint as to them. A number of the named respondents defaulted. On February 21, 2014, the ALJ issued his final initial determination finding a violation of section 337 as to claims 4, 5, 9, and 11 of the '561 patent by the defaulting respondents and recommended issuance of a general exclusion order (''GEO''). Based on evidence of a pattern of violation and difficulty ascertaining the source of the infringing produces, the Commission agreed with the ALJ and issued a GEO directed to cases for portable electronic devices that infringe one of claims 4, 5, 9, and 11 of the '561 patent.

On September 4, 2014, Otter Products, LLC of Fort Collins, Colorado (''Otter'') filed a request with the Commission asking for institution of an advisory opinion proceeding to declare that its Symmetry Series Products are not covered by the general exclusion order. On October 1, 2014, complainant Speck filed an opposition to Otter's request. On October 22, 2014, the Commission determined to institute advisory proceedings to determine whether Otter's Symmetry Series products infringe one or more of claims 4, 5, 9, and 11 of the '561 patent. On October 24, 2014, Otter filed a motion to withdraw its request for an advisory opinion. Notice of the proceeding was published in the **Federal Register** on October 28, 2014. 79 FR. 64214–15 (Oct. 28, 2014).

The Commission has determined to grant Otter's request and has terminated the advisory proceeding.

The authority for the Commission's determination is contained in sections 335 and 337 of the Tariff Act of 1930, as amended (19 U.S.C. 1335, 1337), and in Part 210 of the Commission's Rules of Practice and Procedure (19 CFR Part 210).

Issued: November 7, 2014.

By order of the Commission.

Lisa R. Barton,

Secretary to the Commission.

[FR Doc. 2014–26971 Filed 11–13–14; 8:45 am]

BILLING CODE 7020–02–P

INTERNATIONAL TRADE COMMISSION

[Investigation Nos. 701–TA–456 and 731–TA–1151–1152 (Review)]

Citric Acid and Certain Citrate Salts From Canada and China; Scheduling of Full Five-Year Reviews

AGENCY: United States International Trade Commission.

ACTION: Notice.

SUMMARY: The Commission hereby gives notice of the scheduling of full reviews pursuant to section 751(c)(5) of the Tariff Act of 1930 (19 U.S.C. 1675(c)(5)) (the Act) to determine whether revocation of the antidumping duty and countervailing duty orders on citric acid and certain citrate salts from Canada and China would be likely to lead to continuation or recurrence of material injury within a reasonably foreseeable time. The Commission has determined to exercise its authority to extend the review period by up to 90 days pursuant to 19 U.S.C. § 1675(c)(5)(B). For further information concerning the conduct of these reviews and rules of general application, consult the Commission's Rules of Practice and Procedure, part 201, subparts A through E (19 CFR part

201), and part 207, subparts A, D, E, and F (19 CFR part 207).

DATES: *Effective Date:* November 5, 2014.

FOR FURTHER INFORMATION CONTACT: Joanna Lo (202–205–1888), Office of Investigations, U.S. International Trade Commission, 500 E Street SW., Washington, DC 20436. Hearing-impaired persons can obtain information on this matter by contacting the Commission's TDD terminal on 202–205–1810. Persons with mobility impairments who will need special assistance in gaining access to the Commission should contact the Office of the Secretary at 202–205–2000. General information concerning the Commission may also be obtained by accessing its internet server (*http://www.usitc.gov*). The public record for these reviews may be viewed on the Commission's electronic docket (EDIS) at *http://edis.usitc.gov.*

SUPPLEMENTARY INFORMATION:

Background.—On July 7, 2014, the Commission determined that responses to its notice of institution of the subject five-year reviews were such that full reviews pursuant to section 751(c)(5) of the Act should proceed (79 FR 42049, July 18, 2014). A record of the Commissioners' votes, the Commission's statement on adequacy, and any individual Commissioner's statements are available from the Office of the Secretary and at the Commission's Web site.

Participation in the reviews and public service list.—Persons, including industrial users of the subject merchandise and, if the merchandise is sold at the retail level, representative consumer organizations, wishing to participate in these reviews as parties must file an entry of appearance with the Secretary to the Commission, as provided in section 201.11 of the Commission's rules, by 45 days after publication of this notice. A party that filed a notice of appearance following publication of the Commission's notice of institution of the reviews need not file an additional notice of appearance. The Secretary will maintain a public service list containing the names and addresses of all persons, or their representatives, who are parties to the reviews.

Limited disclosure of business proprietary information (BPI) under an administrative protective order (APO) and BPI service list.—Pursuant to section 207.7(a) of the Commission's rules, the Secretary will make BPI gathered in these reviews available to authorized applicants under the APO issued in the reviews, provided that the application is made by 45 days after publication of this notice. Authorized applicants must represent interested parties, as defined by 19 U.S.C. 1677(9), who are parties to the reviews. A party granted access to BPI following publication of the Commission's notice of institution of the reviews need not reapply for such access. A separate service list will be maintained by the Secretary for those parties authorized to receive BPI under the APO.

Staff report.—The prehearing staff report in the reviews will be placed in the nonpublic record on Wednesday, March 4, 2015, and a public version will be issued thereafter, pursuant to section 207.64 of the Commission's rules.

Hearing.—The Commission will hold a hearing in connection with the reviews beginning at 9:30 a.m. on Wednesday, March 25, 2015, at the U.S. International Trade Commission Building. Requests to appear at the hearing should be filed in writing with the Secretary to the Commission on or before Monday, March 16, 2015. A nonparty who has testimony that may aid the Commission's deliberations may request permission to present a short statement at the hearing. All parties and nonparties desiring to appear at the hearing and make oral presentations should attend a prehearing conference to be held at 9:30 a.m. on Thursday, March 19, 2015, at the U.S. International Trade Commission Building. Oral testimony and written materials to be submitted at the public hearing are governed by sections 201.6(b)(2), 201.13(f), 207.24, and 207.66 of the Commission's rules. Parties must submit any request to present a portion of their hearing testimony *in camera* no later than 7 business days prior to the date of the hearing.

Written submissions.—Each party to the reviews may submit a prehearing brief to the Commission. Prehearing briefs must conform with the provisions of section 207.65 of the Commission's rules; the deadline for filing is Friday, March 13, 2015. Parties may also file written testimony in connection with their presentation at the hearing, as provided in section 207.24 of the Commission's rules, and posthearing briefs, which must conform with the provisions of section 207.67 of the Commission's rules. The deadline for filing posthearing briefs is Friday, April 3, 2015. In addition, any person who has not entered an appearance as a party to the reviews may submit a written statement of information pertinent to the subject of the reviews on or before Friday, April 3, 2015. On Thursday, April 30, 2015, the Commission will make available to parties all information on which they have not had an opportunity to comment. Parties may submit final comments on this information on or before Monday, May 4, 2015, but such final comments must not contain new factual information and must otherwise comply with section 207.68 of the Commission's rules. All written submissions must conform with the provisions of section 201.8 of the Commission's rules; any submissions that contain BPI must also conform with the requirements of sections 201.6, 207.3, and 207.7 of the Commission's rules. The Commission's Handbook on E-Filing, available on the Commission's Web site at *http://edis.usitc.gov,* elaborates upon the Commission's rules with respect to electronic filing.

Additional written submissions to the Commission, including requests pursuant to section 201.12 of the Commission's rules, shall not be accepted unless good cause is shown for accepting such submissions, or unless the submission is pursuant to a specific request by a Commissioner or Commission staff.

In accordance with sections 201.16(c) and 207.3 of the Commission's rules, each document filed by a party to the reviews must be served on all other parties to the reviews (as identified by either the public or BPI service list), and a certificate of service must be timely filed. The Secretary will not accept a document for filing without a certificate of service.

Authority: These reviews are being conducted under authority of title VII of the Tariff Act of 1930; this notice is published pursuant to section 207.62 of the Commission's rules.

By order of the Commission.

Issued: November 7, 2014.

Lisa R. Barton,

Secretary to the Commission.

[FR Doc. 2014–26972 Filed 11–13–14; 8:45 am]

BILLING CODE 7020–02–P

DEPARTMENT OF JUSTICE

Notice of Lodging of Consent Decree Pursuant to the Resource Conservation and Recovery Act and the Clean Water Act

On November 5, 2014, the Department of Justice lodged a proposed Consent Decree (''Decree'') in the United States District Court for the Northern District of Alabama, Southern Division, in the lawsuit entitled *United States of America and State of Alabama* v.*Bessemer Petroleum, Inc., Tri-State Petroleum Products, LLC, and Twin States Petroleum Products, LLC.,*

(collectively ''Defendants'') Civil Action No.2:12–cv–01141–RDP. The Plaintiffs in this case are the United States on behalf of the United States Environmental Protection Agency and the State of Alabama Department of Environmental Management (''ADEM'') (collectively referred to as ''Plaintiffs'').

This Decree represents a settlement of claims against the Defendants for failure to comply with administrative orders issued pursuant to the Resource Conservation and Recovery Act (''RCRA'') and the Clean Water Act (''CWA''), for violations of the Solid Waste Disposal Act (''SWDA''), as amended by RCRA, 42 U.S.C. 6901–6992k, and, pursuant to Section 311 of the CWA, 33. U.S.C. 1321, for the recovery of costs incurred by the United States Coast Guard in responding to the discharge or threat of discharge of oil at the Defendants' facility in Jefferson County, Alabama.

The Consent Decree provides for the injunctive relief sought by the United States that Plaintiffs submit is necessary to address the Defendants' violations to protect human health and the environment. The injunctive relief that the Defendants must perform is set forth in Section VI. (Work to be Performed) of the Consent Decree, and in Appendix B to the Consent Decree (Statement of Work).

The work set forth in the Statement of Work includes: (1) Providing site security; (2) removing and disposing/recycling of all free liquids or sludges from any containers on site; (3) removing or permanently closing all above-ground storage tanks (''ASTs'') at the facility; (4) permanently closing the underground storage tanks (''USTs'') at the facility in accordance with Alabama Department of Environmental Management (''ADEM'') Admin. Code Chapter 335–6–15 (40 CFR Part 280 (Subpart G)); (5) performing a site assessment of soil and groundwater contamination at and around the facility or off-site, as necessary; (6) excavating oil-contaminated soils and disposing of all waste materials; and (7) performing all necessary remediation activities to address contamination exceeding applicable screening or cleanup levels. The Consent Decree requires financial assurance in the form of an escrow account, trust fund, surety bond, letter of credit, or insurance in an amount sufficient to cover the cost of the work outlined in the Statement of Work.

The Consent Decree also requires the Defendants to reimburse the United States Coast Guard for costs incurred in the amount of $239,285.47. In addition, the Consent Decree requires the payment of a $20,000 penalty, to be divided equally between the Plaintiffs. The Consent Decree contains provisions for stipulated penalties for failure to comply with the requirements of the Decree.

The publication of this notice opens a period for public comment on the Consent Decree. Comments should be addressed to the Assistant Attorney General, Environment and Natural Resources Division, and should refer to *United States and State of Alabama* v. *Bessemer Petroleum, Inc., et al,* Civil Action No. 2:12–cv–01141–RDP, D. J. Ref. No. 90–7–1–09700. All comments must be submitted no later than thirty (30) days after the publication date of this notice. Comments may be submitted either by email or by mail:

To submit comments:	Send them to:
By email	*pubcomment-ees.enrd@usdoj.gov.*
By mail	Assistant Attorney General, U.S. DOJ—ENRD, P.O. Box 7611, Washington, DC 20044–7611.

During the public comment period, the Consent Decree may be examined and downloaded at this Justice Department Web site: *http://www.usdoj.gov/enrd/Consent_Decrees.html.* We will provide a paper copy of the Consent Decree upon written request and payment of reproduction costs. Please mail your request and payment to: Consent Decree Library, U.S. DOJ—ENRD, P.O. Box 7611, Washington, DC 20044–7611.

Please enclose a check or money order for $12.00 (25 cents per page reproduction cost) payable to the United States Treasury for the Consent Decree and Exhibits thereto.

Henry S. Friedman,

Assistant Section Chief, Environmental Enforcement Section, Environment and Natural Resources Division.

[FR Doc. 2014–26888 Filed 11–13–14; 8:45 am]

BILLING CODE 4410–15–P

DEPARTMENT OF JUSTICE

Antitrust Division

Notice Pursuant to the National Cooperative Research and Production Act of 1993; Open Platform for NVF Project, Inc.

Notice is hereby given that, on October 17, 2014, pursuant to Section 6(a) of the National Cooperative Research and Production Act of 1993, 15 U.S.C. 4301 *et seq.* (''the Act''), Open Platform for NVF Project, Inc. (''Open Platform for NVF Project'') has filed written notifications simultaneously with the Attorney General and the Federal Trade Commission disclosing (1) the identities of the parties to the venture and (2) the nature and objectives of the venture. The notifications were filed for the purpose of invoking the Act's provisions limiting the recovery of antitrust plaintiffs to actual damages under specified circumstances.

Pursuant to Section 6(b) of the Act, the identities of the parties to the venture are: 6Wind SA, Montigny-le-Bretonneux, FRANCE; Alcatel-Lucent, Murray Hill, NJ; ARM Limited, Cambridge, UNITED KINGDOM; AT&T, Dallas, TX; Broadcom Corporation, Irvine, CA; Brocade Communications, San Jose, CA; Cable Television Laboratories, Inc., Louisville, CO; Cavium, Inc., San Jose, CA; CenturyLink, Monroe, LA; China Mobile Communication Co., Ltd. Research Institute, Beijing, PEOPLE'S REPUBLIC OF CHINA; Ciena Corporation, San Jose, CA; Cisco Systems, Inc., San Jose, CA; Citrix, Santa Clara, CA; ClearPath Networks, El Segundo, CA; Contextream, Inc., Mountain View, CA; Coriant GmbH, Munich, GERMANY; Cyan, Inc., Petaluma, CA; Dell USA, LP, Round Rock, TX; Dorado Software, Inc., El Dorado Hills, CA; Ericsson AB, Kista, SWEDEN; Hewlett-Packard Co., Palo Alto, CA; Huawei Technologies Co., Ltd., Shenzhen, PEOPLE'S REPUBLIC OF CHINA; International Business Machines Corporation, New York, NY; Intel Corporation, Santa Clara, CA; Ixia, Calabasas, CA; Juniper Networks, Sunnyvale, CA; Metaswitch Networks, Ltd., Enfield, UNITED KINGDOM; Mirantis, Inc., Mountain View, CA; NEC Corporation, Tokyo, JAPAN; Nokia Networks, Espoo, FINLAND; NTT DOCOMO, Inc., Tokyo, JAPAN; Ooredoo Group, Doha, QATAR; Orange S.A., Paris, FRANCE; Overture Networks, Inc., Morrisville, NC; Red Hat, Inc., Raleigh, NC; Sandvine Incorporated ULC, Waterloo, Ontario, CANADA; Sprint Corporation, Overland Park, KS; Telecom Italia S.p.a., Torino, ITALY; Vodafone Group PLC, Newbury, UNITED KINGDOM; and Wind River Systems, Alameda, CA.

The general area of Open Platform for NVF Project's planned activity is to drive the evolution of Network Function Virtualization (''NFV'') by (a) developing an integrated and tested open software platform (including interfaces to hardware) capable of providing NVF functionality (the ''Platform''); (b) contributing changes to and influencing upstream projects leveraging the Platform; (c) building

new open source components within the Platform where needed; (d) leveraging open implementations to drive an open standards and open-source-based ecosystem for NFV solutions; (e) supporting and maintaining the strategic framework of the Platform through the technologies made available by the organization to make the Platform a success; (f) promoting the Platform worldwide as the preferred NFV reference platform; (g) coordinating the promotion of the Platform among members and non-members; and (h) undertaking such other activities as may from time to time be appropriate to further the purposes and achieve the goals set forth above.

Patricia A. Brink,

Director of Civil Enforcement, Antitrust Division.

[FR Doc. 2014–26942 Filed 11–13–14; 8:45 am]

BILLING CODE P

DEPARTMENT OF JUSTICE

Antitrust Division

Notice Pursuant to the National Cooperative Research and Production Act of 1993; Telemanagement Forum

Notice is hereby given that, on October 3, 2014, pursuant to Section 6(a) of the National Cooperative Research and Production Act of 1993, 15 U.S.C. 4301 *et seq.* (''the Act''), Telemanagement Forum (''The Forum'') has filed written notifications simultaneously with the Attorney General and the Federal Trade Commission disclosing changes in its membership. The notifications were filed for the purpose of extending the Act's provisions limiting the recovery of antitrust plaintiffs to actual damages under specified circumstances. Specifically, the following parties have been added as members to this venture: Telecom, Giza, EGYPT; AISSI TECH Ltd., Moulineaux, FRANCE; OPT Nouvelle Calédonie, New Caledonia, FRANCE; Righteous Technologies, Andhra Pradesh, INDIA; Persistent Systems Ltd., Pune, INDIA; Mastercom TechServices Pvt Ltd., Karnataka, INDIA; TEO LT, AB, Vilnius, LITHUANIA; Telenor Montenegro, Podgorica, MONTENEGRO; Urbatech Group FZE, Casablanca, MOROCCO; Northpower Fibre, Whangarei, NEW ZEALAND; one2tribe Sp. z o.o., Warsaw, POLAND; NOS Comunicações, Lisboa, PORTUGAL; SATEC GROUP, Madrid, SPAIN; Netka System, Bangkok, THAILAND; Jastorrie.com, Maidenhead, UNITED KINGDOM; BearingPoint, London, UNITED KINGDOM; Kaiser Permanente, Pleasanton, CA; PCCW Global, Herndon, VA; Fulcrum Technologies, Inc., Seattle, WA; Velocity, San Francisco, CA; Tonex, Inc., Richardson, TX; and Integrated Research, Inc., Denver, CO.

The following members have changed their names: Telecom Corporation of New Zealand to Spark New Zealand, Auckland, NEW ZEALAND; AsiaInfo-Linkage, Inc. to AsiaInfo, Inc., Beijing, PEOPLE'S REPUBLIC OF CHINA; National Communication System to Office of Emergency Communications, McLean, VA; Eastek Pty Ltd to ArenaCore Pty Ltd., Melbourne, AUSTRALIA; and Wataniya Telecom Maldives Private Limited to Ooredoo Maldives Pvt Ltd., Male, MALDIVES.

The following members have withdrawn as parties to this venture: Empresa De Telecomunicaciones De Bogota S.A. E.S.P, Bogota, COLOMBIA; BI Telecom, Moscow, RUSSIA; PricewaterhouseCoopers LLP, London, UNITED KINGDOM; Bakcell LTD, Baku, AZERBAIJAN; O2 Czech Republic, a.s., Prague, CZECH REPUBLIC; ServiceFrame, Dublin, IRELAND; Computaris, Essex, UNITED KINGDOM; MTN SA (Pty) Ltd., Randburg, SOUTH AFRICA; New Generation Management Consulting Pty Ltd., Johannesburg, SOUTH AFRICA; Abiba Systems Private Limited, Bangalore, INDIA; MTN Nigeria Communications Ltd., Lagos, NIGERIA; MTN Cameroon, Douala, CAMEROON; Telefonica Moviles Soluciones y Aplicaciones S.A., Santiago, CHILE; Finserve Africa Limited, Nairobi, KENYA; Phone Wave, Ontario, CANADA; ACBIS, Quebec, CANADA; Scancom Ltd., Ridge-Accra, GHANA; Gilgamesh OSS Services, Weybridge, UNITED KINGDOM; AIRCOM International Ltd., Leatherhead, UNITED KINGDOM; Comware C&C International, Corp., Taiwan, PEOPLE'S REPUBLIC OF CHINA; GFI INFORMATIQUE, Saint-Ouen, FRANCE; GTA Teleguam, Tamuning, GUAM; Perform IT Limited, Dublin, IRELAND; Telefonica Ireland, Dublin 2, IRELAND; Meditelecom, Casablanca, MOROCCO; Spark New Zealand Limited, Auckland, NEW ZEALAND; Suntech S.A., Warszawa, POLAND; Asteros Labs, Moscow, RUSSIA; Bercut LLC, Saint Petersburg, RUSSIA; O2 Slovakia, Bratislava, SLOVAK REPUBLIC; Pictor Consulting, Danderyd, SWEDEN; KIBO FZC, Ras Al Kaimah, UNITED ARAB EMIRATES; A&K Telecoms Consulting Services (UK) Limited, Slough, UNITED KINGDOM; Neul Ltd., Cambridge, UNITED KINGDOM; Aerospace Corporation, El Segundo, CA; e*Tezeract, Inc., Murrieta, CA; ETI Software Solutions, Norcross, GA; Guavus, San Mateo, CA; Johns Hopkins University Applied Physics Lab, Laurel, MD; Model Advisors, West Linn, OR; Orchestral Networks, Atherton, CA; Stamey Consulting, LLC, Seattle, WA; Valtira LLC, Minneapolis, MN; Ventraq, Inc., Mount Laurel, NJ; Bank of America, New York, NY; and ComScore, Reston, VA.

No other changes have been made in either the membership or planned activity of the group research project. Membership in this group research project remains open, and The Forum intends to file additional written notifications disclosing all changes in membership.

On October 21, 1988, The Forum filed its original notification pursuant to Section 6(a) of the Act. The Department of Justice published a notice in the **Federal Register** pursuant to Section 6(b) of the Act on December 8, 1988 (53 FR 49615).

The last notification was filed with the Department on September 16, 2014. A notice was published in the **Federal Register** pursuant to Section 6(b) of the Act on October 22, 2014 (79 FR 63167).

Patricia A. Brink,

Director of Civil Enforcement, Antitrust Division.

[FR Doc. 2014–26941 Filed 11–13–14; 8:45 am]

BILLING CODE P

LABOR DEPARTMENT

Employment and Training Administration

Federal-State Unemployment Compensation Program: Certifications for 2014 Under the Federal Unemployment Tax Act

AGENCY: Employment and Training Administration.

ACTION: Notice.

SUMMARY: The Secretary of Labor signed the annual certifications under the Federal Unemployment Tax Act, 26 U.S.C. 3301 *et seq.,* thereby enabling employers who make contributions to state unemployment funds to obtain certain credits against their liability for the federal unemployment tax. By letter, the certifications were transmitted to the Secretary of the Treasury. The letter and certifications are printed below.

Signed in Washington, DC, October 31, 2014.

Portia Wu,

Assistant Secretary, Employment and Training Administration.

October 31, 2014

The Honorable Jacob J. Lew, Secretary of the Treasury, Department of the Treasury, 1500 Pennsylvania Avenue NW., Washington, DC 20220

Dear Secretary Lew: Transmitted herewith are an original and one copy of the certifications of the states and their unemployment compensation laws for the 12-month period ending on October 31, 2014. One is required with respect to the normal federal unemployment tax credit by Section 3304 of the Internal Revenue Code of 1986 (IRC), and the other is required with respect to the additional tax credit by Section 3303 of the IRC. Both certifications list all 53 jurisdictions.

Sincerely,

THOMAS E. PEREZ

Enclosures

UNITED STATES DEPARTMENT OF LABOR

OFFICE OF THE SECRETARY

WASHINGTON, D.C.

CERTIFICATION OF STATES TO THE SECRETARY OF THE TREASURY PURSUANT TO SECTION 3304(c) OF THE INTERNAL REVENUE CODE OF 1986

In accordance with the provisions of Section 3304(c) of the Internal Revenue Code of 1986 (26 U.S.C. 3304(c)), I hereby certify the following named states to the Secretary of the Treasury for the 12-month period ending on October 31, 2014, in regard to the unemployment compensation laws of those states, which heretofore have been approved under the Federal Unemployment Tax Act:

Alabama	Louisiana
Alaska	Maine
Arizona	Maryland
Arkansas	Massachusetts
California	Michigan
Colorado	Minnesota
Connecticut	Mississippi
Delaware	Missouri
District of Columbia	Montana
Florida	Nebraska
Georgia	Nevada
Hawaii	New Hampshire
Idaho	New Jersey
Illinois	New Mexico
Indiana	New York
Iowa	North Carolina
Kansas	North Dakota
Kentucky	Ohio
Oklahoma	Utah
Oregon	Vermont
Pennsylvania	Virginia
Puerto Rico	Virgin Islands
Rhode Island	Washington
South Carolina	West Virginia
South Dakota	Wisconsin
Tennessee	Wyoming
Texas	

This certification is for the maximum normal credit allowable under Section 3302(a) of the Code.

Signed at Washington, DC, on October 31, 2014.

THOMAS E. PEREZ

UNITED STATES DEPARTMENT OF LABOR

OFFICE OF THE SECRETARY

WASHINGTON, DC

CERTIFICATION OF STATE UNEMPLOYMENT COMPENSATION LAWS TO THE SECRETARY OF THE TREASURY PURSUANT TO SECTION 3303(b)(1) OF THE INTERNAL REVENUE CODE OF 1986

In accordance with the provisions of paragraph (1) of Section 3303(b) of the Internal Revenue Code of 1986 (26 U.S.C. 3303(b)(1)), I hereby certify the unemployment compensation laws of the following named states, which heretofore have been certified pursuant to paragraph (3) of Section 3303(b) of the Code, to the Secretary of the Treasury for the 12-month period ending on October 31, 2014:

Alabama	Louisiana
Alaska	Maine
Arizona	Maryland
Arkansas	Massachusetts
California	Michigan
Colorado	Minnesota
Connecticut	Mississippi
Delaware	Missouri
District of Columbia	Montana
Florida	Nebraska
Georgia	Nevada
Hawaii	New Hampshire
Idaho	New Jersey
Illinois	New Mexico
Indiana	New York
Iowa	North Carolina
Kansas	North Dakota
Kentucky	Ohio
Oklahoma	Utah
Oregon	Vermont
Pennsylvania	Virginia
Puerto Rico	Virgin Islands
Rhode Island	Washington
South Carolina	West Virginia
South Dakota	Wisconsin
Tennessee	Wyoming
Texas	

This certification is for the maximum additional credit allowable under Section 3302(b) of the Code, subject to the limitations of Section 3302(c) of the Code.

Signed at Washington, DC, on October 31, 2014.

THOMAS E. PEREZ

[FR Doc. 2014–26958 Filed 11–13–14; 8:45 am]

BILLING CODE 4510–30–P

LEGAL SERVICES CORPORATION

Sunshine Act Meeting Notice

DATE AND TIME: The Legal Services Corporation's Board of Directors and Governance and Performance Review Committee will meet telephonically on November 17, 2014. The meeting will commence at 3:30 p.m., Eastern Time, and will continue until the conclusion of the Board's agenda.

LOCATION: F. William McCalpin Conference Center, Legal Services Corporation Headquarters, 3333 K Street NW., Washington, DC 20007.

PUBLIC OBSERVATION: Members of the public who are unable to attend in person but wish to listen to the public proceedings may do so by following the telephone call-in directions provided below.

CALL-IN DIRECTIONS FOR OPEN SESSIONS:

- Call toll-free number: 1–866–451–4981;
- When prompted, enter the following numeric pass code: 5907707348
- When connected to the call, please immediately ''MUTE'' your telephone. Members of the public are asked to keep their telephones muted to eliminate background noises. To avoid disrupting the meeting, please refrain from placing the call on hold if doing so will trigger recorded music or other sound. From time to time, the presiding Chair may solicit comments from the public.

STATUS OF MEETINGS: Open.

MATTERS TO BE CONSIDERED:

Governance and Performance Review Committee

1. Approval of agenda
2. Consider and act on adoption of a Health Reimbursement Arrangement Plan and delegation to the LSC President of authority to amend employee health benefits
3. Public Comment
4. Consider and act on adjournment of meeting

Board of Directors

1. Approval of agenda
2. Consider and act on the Board of Directors' transmittal to accompany the Inspector General's Semiannual Report to Congress for the period of April 1, 2014 to September 30, 2014
3. Public Comment
4. Consider and act on other business
5. Consider and act on adjournment of meeting

CONTACT PERSON FOR INFORMATION: Katherine Ward, Executive Assistant to the Vice President & General Counsel, at (202) 295–1500. Questions may be sent by electronic mail to *FR_NOTICE_QUESTIONS@lsc.gov.*

ACCESSIBILITY: LSC complies with the Americans with Disabilities Act and Section 504 of the 1973 Rehabilitation Act. Upon request, meeting notices and materials will be made available in alternative formats to accommodate individuals with disabilities. Individuals who need other accommodations due to disability in order to attend the meeting in person or telephonically should contact Katherine Ward, at (202) 295–1500 or *FR_NOTICE_QUESTIONS@lsc.gov,* at least 2 business days in advance of the meeting. If a request is made without advance notice, LSC will make every effort to accommodate the request but cannot guarantee that all requests can be fulfilled.

Dated: November 10, 2014.

Atitaya C. Rok,

Staff Attorney.

[FR Doc. 2014–27062 Filed 11–12–14; 11:15 am]

BILLING CODE 7050–01–P

NATIONAL AERONAUTICS AND SPACE ADMINISTRATION

[Notice: (14–116)]

NASA Advisory Council; Aeronautics Committee; Meeting

AGENCY: National Aeronautics and Space Administration.

ACTION: Notice of Meeting.

SUMMARY: In accordance with the Federal Advisory Committee Act, Public Law 92–463, as amended, the National Aeronautics and Space Administration (NASA) announces a meeting of the Aeronautics Committee of the NASA Advisory Council. The meeting will be held for the purpose of soliciting, from the aeronautics community and other persons, research and technical information relevant to program planning.

DATES: Thursday, December 4, 2014, 9:00 a.m. to 3:45 p.m.; Local Time.

ADDRESSES: NASA Ames Research Center, NASA Ames Conference Center, Building 3, 500 Severyns Road, NASA Research Park, Moffett Field, California 95035–1000.

FOR FURTHER INFORMATION CONTACT: Ms. Susan L. Minor, Executive Secretary for the Aeronautics Committee, NASA Headquarters, Washington, DC 20546, (202) 358–0566, or *susan.l.minor@nasa.gov.* Any person interested in participating in the meeting by Webex and telephone should contact Ms. Susan L. Minor at (202) 358–0566 for the web link, toll-free number and passcode.

SUPPLEMENTARY INFORMATION: The meeting will be open to the public up to the capacity of the room. The agenda for the meeting includes the following topics:

- NASA Ames Research Center Overview
- Verification and Validation Research Update
- Umanned Aircraft Systems (UAS) Traffic Management
- Federal Aviation Administration UAS Center of Excellence overview
- NASA Aeronautics Research Mission Directorate Strategic Implementation Plan Discussion

Attendees will be requested to comply with NASA Ames Research Center security requirements, including the presentation of a valid picture ID before receiving an access badge. U.S. Citizens will need to show valid, officially-issued picture identification such as driver's license to enter into the NASA Research Park, and must state they are attending the NASA Advisory Council Aeronautics Committee session in the NASA Ames Conference Center. Permanent Residents (green card holders) will need to show residency status (valid green card) and must state they are attending the Aeronautics Committee session in the NASA Ames Conference Center. Foreign Nationals must submit, no less than 10 working days prior to the meeting, their full name, gender, current address, citizenship, company affiliation (if applicable) to include address, telephone number, and their title, place of birth, date of birth, U.S. visa information to include type, number and expiration date, U.S. Social Security Number (if applicable), and an electronically scanned or faxed copy of their passport and visa via email to *carolina.rudisel@nasa.gov* or fax to 650–604–6104. For questions, please contact Ms. Carolina Rudisel, Protocol Specialist, Office of the Center Director, NASA Ames Research Center, Moffett Field, CA at (650) 604–2476 or *carolina.rudisel@nasa.gov.* It is imperative that these meetings be held on this date to accommodate the scheduling priorities of the key participants.

Patricia D. Rausch,

Advisory Committee Management Officer, National Aeronautics and Space Administration.

[FR Doc. 2014–26993 Filed 11–13–14; 8:45 am]

BILLING CODE 7510–13–P

NATIONAL AERONAUTICS AND SPACE ADMINISTRATION

[Notice: 14–115]

NASA Advisory Council; Science Committee; Meeting

AGENCY: National Aeronautics and Space Administration.

ACTION: Notice of meeting.

SUMMARY: In accordance with the Federal Advisory Committee Act, Public Law 92–463, as amended, the National Aeronautics and Space Administration (NASA) announces a meeting of the Science Committee of the NASA Advisory Council (NAC). This Committee reports to the NAC. The meeting will be held for the purpose of soliciting, from the scientific community and other persons, scientific and technical information relevant to program planning.

DATES: Monday, December 1, 2014, 8:00 a.m. to 5:00 p.m.; Tuesday, December 2, 2014, 8:00 a.m. to 6:00 p.m.; and Wednesday, December 3, 2014, 8:00 a.m. to 12:30 p.m.; Local Time.

ADDRESSES: This meeting will take place at NASA Headquarters, Room 7H41 (December 1 through 12:00 noon December 2); Room 9H40 (1:00 p.m. December 2 through 12:30 p.m. December 3); 300 E Street SW., Washington, DC 20546.

FOR FURTHER INFORMATION CONTACT: Ms. Ann Delo, Science Mission Directorate, NASA Headquarters, Washington, DC 20546, (202) 358–0750, fax (202) 358–2779, or *ann.b.delo@nasa.gov.*

SUPPLEMENTARY INFORMATION: The meeting will be open to the public up to the capacity of the room. The meeting will also be available telephonically and by WebEx. To participate in this meeting by telephone, any interested person may call the USA toll free conference call numbers: 800–988–9663, passcode 8015 for December 1 through 12:00 noon December 2, and 888–469–0647, passcode 5106584 for 1:00 p.m. December 2 through December 3. The WebEx link is *https://nasa.webex.com/*; the meeting number on December 1 is 990 382 858, and the password is Science@Dec1. The meeting number on December 2 through noon is 997 582 153, and the password is Science@Dec2. The meeting number on December 2 beginning at 1:00 p.m. through December 3, is 993 284 327 and the password is December2–3! The agenda for the meeting includes the following topics:

—Research and Analysis
—Ad Hoc Task Force on Big Data
—Technology Infusion

—Subcommittee Reports
—Joint Session with NAC Human Exploration and Operations Committee
—Radiation Environment and Countermeasures for Human Exploration to Mars
—Human Exploration and Operations Mission Directorate/Science Mission Directorate Joint Activities
—Evolvable Mars Campaign
—Asteroid Redirect Mission and Sustainable Human Exploration

Attendees will be requested to sign a register and to comply with NASA security requirements, including the presentation of a valid picture ID before receiving access to NASA Headquarters. Foreign nationals attending this meeting will be required to provide a copy of their passport and visa in addition to providing the following information no less than 10 working days prior to the meeting: full name; gender; date/place of birth; citizenship; passport information (number, country, telephone); visa information (number, type, expiration date); employer/affiliation information (name of institution, address, country, telephone); title/position of attendee. To expedite admittance, attendees with U.S. citizenship and Permanent Residents (green card holders) can provide full name and citizenship status 3 working days prior to the meeting to Ann Delo via email at *ann.b.delo@nasa.gov* or by fax at (202) 358–2779.

It is imperative that the meeting be held on these dates to accommodate the scheduling priorities of the key participants.

Patricia D. Rausch,

Advisory Committee Management Officer, National Aeronautics and Space Administration.

[FR Doc. 2014–26992 Filed 11–13–14; 8:45 am]

BILLING CODE 7510–13–P

NATIONAL ARCHIVES AND RECORDS ADMINISTRATION

[NARA–2015–010]

Agency Information Collection Activities: Proposed Collection; Comment Request

AGENCY: National Archives and Records Administration (NARA).

ACTION: Notice of Information Collection Proposed Extension Request.

SUMMARY: NARA is giving public notice that the agency proposes to request extension of a currently approved information collection used to permit the public and other Federal agencies to use its official seal(s) and/or logo(s). The public is invited to comment on the proposed information collection pursuant to the Paperwork Reduction Act of 1995.

DATES: Written comments must be received on or before January 13, 2015 to be assured of consideration.

ADDRESSES: Comments should be sent to: Paperwork Reduction Act Comments (ISSD), Room 4400, National Archives and Records Administration, 8601 Adelphi Rd, College Park, MD 20740–6001; or faxed to 301–713–7409; or electronically mailed to *tamee.fechhelm@nara.gov.*

FOR FURTHER INFORMATION CONTACT: Requests for additional information or copies of the proposed information collections and supporting statements should be directed to Tamee Fechhelm at telephone number 301–837–1694, or fax number 301–713–7409.

SUPPLEMENTARY INFORMATION: Pursuant to the Paperwork Reduction Act of 1995 (Pub. L. 104–13), NARA invites the general public and other Federal agencies to comment on proposed information collections. The comments and suggestions should address one or more of the following points: (a) Whether the proposed collection information is necessary for the proper performance of the functions of NARA; (b) the accuracy of NARA's estimate of the burden of the proposed information collections; (c) ways to enhance the quality, utility, and clarity of the information to be collected; (d) ways to minimize the burden of the collection of information on respondents, including the use of information technology; and (e) whether small businesses are affected by this collection. The comments that are submitted will be summarized and included in the NARA request for Office of Management and Budget (OMB) approval. All comments will become a matter of public record. In this notice, NARA is soliciting comments concerning the following information collection:

Title: Use of NARA Official Seals and/or Logos.

OMB number: 3095–0052.

Agency form number: N/A.

Type of review: Regular.

Affected public: Business or other for-profit, Not-for-profit institutions, Federal government.

Estimated number of respondents: 10.

Estimated time per response: 20 minutes.

Frequency of response: On occasion.

Estimated total annual burden hours: 3 hours.

Abstract: The authority for this information collection is contained in 36 CFR 1200.8. NARA's three official seals are the National Archives and Records Administration seal; the National Archives seal; and the Nationals Archives Trust Fund Board seal. The official seals are used to authenticate various copies of official records in our custody and for other official NARA business. Occasionally, when criteria are met, we will permit the public and other Federal agencies to use our official seals. A written request must be submitted to use the official seals, which we approve or deny using specific criteria.

Dated: November 6, 2014.

Swarnali Haldar,

Executive for Information Services/CIO.

[FR Doc. 2014–26934 Filed 11–13–14; 8:45 am]

BILLING CODE 7515–01–P

NATIONAL FOUNDATION ON THE ARTS AND THE HUMANITIES

Arts Advisory Panel Meeting

AGENCY: National Endowment for the Arts, National Foundation on the Arts and Humanities.

ACTION: Notice of meeting.

SUMMARY: Pursuant to Section 10(a)(2) of the Federal Advisory Committee Act (Pub. L. 92–463), as amended, notice is hereby given that 14 meetings of the Arts Advisory Panel to the National Council on the Arts will be held by teleconference from the National Endowment for the Arts, Constitution Center, 400 7th St. SW., Washington, DC 20506 as follows (all meetings are Eastern time and ending times are approximate):

Museums (application review): This meeting will be closed.

Dates: December 1, 2014. 2:30 p.m. to 5:00 p.m.

Museums (application review): This meeting will be closed.

Dates: December 2, 2014. 11:30 a.m. to 2:00 p.m.

Museums (application review): This meeting will be closed.

Dates: December 2, 2014. 2:30 p.m. to 5:00 p.m.

Presenting & Multidisciplinary Works (application review): This meeting will be closed.

Dates: December 2, 2014. 2:00 p.m. to 4:00 p.m.

Presenting & Multidisciplinary Works (application review): This meeting will be closed.

Dates: December 3, 2014. 3:00 p.m. to 5:00 p.m.

Arts Education (application review): This meeting will be closed.

Dates: December 5, 2014. 1:30 p.m. to 3:30 p.m.

Media Arts (application review): This meeting will be closed.

Dates: December 8, 2014. 2:00 p.m. to 4:30 p.m.

Media Arts (application review): This meeting will be closed.

Dates: December 9, 2014. 2:00 p.m. to 4:30 p.m.

Presenting & Multidisciplinary Works (application review): This meeting will be closed.

Dates: December 10, 2014. 2:00 p.m. to 4:00 p.m.

Literature (application review): This meeting will be closed.

Dates: December 10, 2014. 3:00 p.m. to 5:00 p.m.

Literature (application review): This meeting will be closed.

Dates: December 11, 2014. 3:00 p.m. to 5:00 p.m.

Arts Education (application review): This meeting will be closed.

Dates: December 12, 2014. 1:30 p.m. to 3:30 p.m.

Arts Education (application review): This meeting will be closed.

Dates: December 17, 2014. 1:30 p.m. to 3:30 p.m.

Arts Education (application review): This meeting will be closed.

Dates: December 18, 2014. 1:30 p.m. to 3:30 p.m.

FOR FURTHER INFORMATION CONTACT: Further information with reference to these meetings can be obtained from Ms. Kathy Plowitz-Worden, Office of Guidelines & Panel Operations, National Endowment for the Arts, Washington, DC 20506; *plowitzk@arts.gov,* or call 202/682–5691.

SUPPLEMENTARY INFORMATION: The closed portions of meetings are for the purpose of Panel review, discussion, evaluation, and recommendations on financial assistance under the National Foundation on the Arts and the Humanities Act of 1965, as amended, including information given in confidence to the agency. In accordance with the determination of the Chairman of February 15, 2012, these sessions will be closed to the public pursuant to subsection (c)(6) of section 552b of Title 5, United States Code.

Dated: November 10, 2014.

Kathy Plowitz-Worden,

Panel Coordinator, National Endowment for the Arts.

[FR Doc. 2014–26957 Filed 11–13–14; 8:45 am]

BILLING CODE 7537–01–P

NATIONAL SCIENCE FOUNDATION

Sunshine Act Meetings

AGENCY: National Science Board, National Science Foundation.

The National Science Board, pursuant to NSF regulations (45 CFR Part 614), the National Science Foundation Act, as amended (42 U.S.C. 1862n–5), and the Government in the Sunshine Act (5 U.S.C. 552b), hereby gives notice of the scheduling of meetings for the transaction of National Science Board business, as follows:

DATES AND TIME: November 19, 2014 from 8:30 a.m. to 5:00 p.m., and November 20 from 8:30 a.m. to 3:00 p.m. (EST).

PLACE: These meetings will be held at the National Science Foundation, 4201Wilson Blvd., Rooms 1235, Arlington, VA 22230. All visitors must contact the Board Office (call 703–292–7000 or send an email message to *nationalsciencebrd@nsf.gov*) at least 24 hours prior to the meeting and provide name and organizational affiliation. Visitors must report to the NSF visitor desk located in the lobby at the 9th and N. Stuart Streets entrance to receive a visitor's badge.

WEBCAST INFORMATION: Public meetings and public portions of meetings will be Webcast. To view the meetings, go to *http://www.tvworldwide.com/events/nsf/140917/* and follow the instructions.

UPDATES: Please refer to the National Science Board Web site for additional information. Meeting information and schedule updates (time, place, subject matter or status of meeting) may be found at *http://www.nsf.gov/nsb/notices/.*

AGENCY CONTACT: Jennie L. Moehlmann, *jmoehlma@nsf.gov,* (703) 292–7000.

PUBLIC AFFAIRS CONTACT: Nadine Lymn, *nlymn@nsf.gov,* (703) 292–2490.

STATUS: Portions open; portions closed.

OPEN SESSIONS:

November 19, 2014

8:30–8:35 a.m. (Chairman's introduction)
8:35–9:30 a.m. (SCF)
9:30–10:30 a.m. (CEH)
1:00–2:15 p.m. (CPP)
2:15–3:30 p.m. (A&O)

November 20, 2014

8:45–9:00 a.m. (CSB)
9:00–10:30 a.m. (SEI)
10:45–11:45 a.m. (CPP)
1:15–3:00 p.m. (Plenary)

CLOSED SESSIONS:

November 19, 2014

10:45–11:30 a.m. (CPP)
3:30–3:45 p.m. (A&O)
3:45–5:00 p.m. (Plenary)

November 20, 2014

8:30–8:45 a.m. (CSB)
12:45–1:15 p.m. (Plenary)

MATTERS TO BE DISCUSSED:

Wednesday, November 19, 2014

CSB Subcommittee on Facilities (SCF)

Open Session: 8:35–9:30 a.m.

- Committee Chairman's remarks
- Approval of the September 2014 teleconference minutes
- Information Item: Update on the large facilities office
- Discussion on status of recommendations from FY 2013 Annual Portfolio Review (APR): large facilities synopses; other recommendations
- Discussion of Regional Class Research Vessels (RCRVs)

Committee on Education and Human Resources (CEH)

Open Session: 9:30–10:30 a.m.

- Committee Chairman's remarks
- Approval of open CEH minutes for August 2013 meeting
- Presentation: NSF Investments in STEM Education
- Discussion of NSF's education portfolio with the NSF Assistant Directors

Committee on Programs and Plans (CPP)

Closed Session: 10:45–11:30 a.m.

- Approval of closed CPP minutes for August 2014
- Committee Chairman's remarks
- NSB Action Item: The iPlant Collaborative: Cyberinfrastructure for the Life Sciences

Committee on Programs and Plans (CPP)

Open Session: 1:00–2:15 p.m.

- Committee Chairman's remarks
- Science briefing at the Poles: overview of polar science—Antarctic and Arctic; NSB Members site visit report

Audit and Oversight Committee (A&O)

Open Session: 2:15–3:30 p.m.

- Approval of August 2014 meeting minutes
- Committee Chairman's opening remarks
- Transmittal of OIG Semi-annual report
- Inspector General's update: update on data analytics; OIG FY 2015 audit plan

- Briefing on OIG and NSF management roles and responsibilities related to audit resolution
- Chief Financial Officer's update
- Committee Chairman's closing remarks

Audit and Oversight Committee

Closed Session: 3:30–3:45 p.m.

- Committee Chairman's opening remarks
- Approval of August 2014 closed committee minutes
- NSF relocation update
- Chairman's closing remarks

Plenary Board Meeting

Closed Session: 3:45–5:00 p.m.

- Approval of closed session minutes, August 2014
- Discussion on risks to NSF
- Awards and Agreements/CPP action item: the iPlant Collaborative—Cyberinfrastructure for the Life Sciences
- Closed committee reports
- Chairman's remarks

Thursday, November 20, 2014

Committee on Strategy and Budget (CSB)

Closed Session: 8:30–8:45.m.

- Approval of CSB closed minutes for August 2014
- NSF FY 2016 budget update
- Strategic reviews to inform 2017 budget development

Committee on Strategy and Budget (CSB)

Open Session: 8:45–9:00 a.m.

- Committee Chairman's remarks
- Approval of CSB open minutes for August 2014
- NSF FY 2015 NSB budget update

Committee on Science & Engineering Indicators (SEI)

Open Session: 9:00–10:30 a.m.

- Chairman's remarks, approval of the August 2014 meeting minutes and the September 2014 teleconference minutes
- Approval of *Science and Engineering Indicators 2016* narrative outlines
- Discussion of the ''field of degree'' question on the American Community Survey
- Discussion of the Companion to *Indicators* 2014
- Discussion on demographic data in the 2014 version of the STEM education online resource
- Chairman's closing remarks

CPP

Open session: 10:45–11:45 a.m.

- Approval of open CPP minutes for August 2014
- Committee Chairman's remarks: CY 2015 tentative schedule of action and information items for NSB review; updates on Blue Waters and NSF strategic planning for high performance computing (HPC)
- NSB Information Item: MPS Advisory Committee, subcommittee on NSF response to strategic plan for particle physics outlined in the May 2014 Particle Physics Project Prioritization Panel (P5) report
- Discussion on research program development

Plenary

Executive Closed Session: 12:45–1:15 p.m.

- Approval of executive closed session minutes, May 2014
- Approval of Honorary Awards recommendations
- Chairman's remarks 2014

Plenary Board Meeting

Open Session: 1:15–3:00 p.m.

- Approval of open session minutes, August 2014
- Chairman's report
- Director's report
- Open committee reports
- Chairman's remarks

Meeting Adjourns: 3:00 p.m.

Ann Bushmiller,

Senior Counsel to the National Science Board.

[FR Doc. 2014–27123 Filed 11–12–14; 4:15 pm]

BILLING CODE 7555–01–P

NUCLEAR REGULATORY COMMISSION

[Docket No. 50–483; NRC–2012–0001]

License Renewal Application for Callaway Plant, Unit 1

AGENCY: Nuclear Regulatory Commission.

ACTION: Supplemental environmental impact statement.

SUMMARY: The U.S. Nuclear Regulatory Commission (NRC) is making available a final plant-specific supplement, Supplement 51, to NUREG–1437, ''Generic Environmental Impact Statement for License Renewal of Nuclear Plants'' (GEIS), regarding the renewal of Union Electric Company's Operating License NPF–30 for an additional 20 years of operation for Callaway Plant, Unit 1 (Callaway).

DATES: The final Supplement 51 to the GEIS is available as of November 14, 2014.

ADDRESSES: Please refer to Docket ID NRC–2012–0001 when contacting the NRC about the availability of information regarding this document. You may obtain publicly-available information related to this document using any of the following methods:

- Federal Rulemaking Web site: Go to *http://www.regulations.gov* and search for Docket ID NRC–2012–0001. Address questions about NRC dockets to Carol Gallagher; telephone: 301–287–3422; email: *Carol.Gallagher@nrc.gov.* For technical questions, contact the individual listed in the **FOR FURTHER INFORMATION CONTACT** section of this document.
- NRC's Agencywide Documents Access and Management System (ADAMS): You may obtain publicly-available documents online in the ADAMS Public Documents collection at *http://www.nrc.gov/reading-rm/adams.html.* To begin the search, select *''ADAMS Public Documents''* and then select *''Begin Web-based ADAMS Search.''* For problems with ADAMS, please contact the NRC's Public Document Room (PDR) reference staff at 1–800–397–4209, 301–415–4737, or by email to *pdr.resource@nrc.gov.* The ADAMS accession number for the final Supplement 51 to the GEIS is ML14289A140.
- NRC's PDR: You may examine and purchase copies of public documents at the NRC's PDR, Room O1–F21, One White Flint North, 11555 Rockville Pike, Rockville, Maryland 20852.
- Callaway County Public Library: The final Supplement 51 to the GEIS is available for public inspection at 710 Court Street, Callaway County, MO, 65251.

FOR FURTHER INFORMATION, CONTACT: Tam Tran, Office of Nuclear Reactor Regulation, telephone: 800–368–5692, ext. 3617, email: *Tam.Tran@nrc.gov,* U.S. Nuclear Regulatory Commission, Washington, DC 20555–0001.

SUPPLEMENTARY INFORMATION:

I. Background

The NRC is making available final Supplement 51 to the GEIS regarding the renewal of Union Electric Company's Operating License NPF–30 for an additional 20 years of operation for Callaway. The Callaway site is located in Callaway County, MO. The draft Supplement 51 to the GEIS was issued for public comment on February 21, 2014.

II. Discussion

As discussed in Section 9.4 of the final Supplement 51 to the GEIS, the NRC staff determined that the adverse environmental impacts of license renewal for Callaway are not so great that preserving the option of license renewal for energy-planning decisionmakers would be unreasonable. This recommendation is based on: (1) The analysis and findings in the GEIS; (2) information provided in the environmental report and other documents submitted by Union Electric Company; (3) consultation with Federal, state, local, and Tribal agencies; (4) the NRC staff's independent environmental review; and (5) consideration of public comments received during the scoping process and on the draft Supplemental Environmental Impact Statement.

Dated at Rockville, Maryland, this 5th day of November, 2014.

For the Nuclear Regulatory Commission.

Brian D. Wittick,

Chief, Projects Branch 2, Division of License Renewal, Office of Nuclear Reactor Regulation.

[FR Doc. 2014–26788 Filed 11–13–14; 8:45 am]

BILLING CODE 7590–01–P

NUCLEAR REGULATORY COMMISSION

[NRC–2014–0004]

Aging Management of Loss of Coating or Lining Integrity for Internal Coatings/Linings on In-Scope Piping, Piping Components, Heat Exchangers, and Tanks

AGENCY: Nuclear Regulatory Commission.

ACTION: Interim staff guidance; issuance.

SUMMARY: The U.S. Nuclear Regulatory Commission (NRC) is issuing the final License Renewal Interim Staff Guidance (LR–ISG), LR–ISG–2013–01, ''Aging Management of Loss of Coating or Lining Integrity for Internal Coatings/Linings on In-Scope Piping, Piping Components, Heat Exchangers, and Tanks.'' This LR–ISG provides changes to NRC staff-recommended aging management programs (AMPs), aging management review (AMR) items, and definitions in NUREG–1801, Revision 2, ''Generic Aging Lessons Learned (GALL) Report,'' and the NRC staff's Final Safety Analysis Report Supplement program descriptions and AMR items contained in NUREG–1800, Revision 2, ''Standard Review Plan for Review of License Renewal Applications for Nuclear Power Plants'' (SRP–LR).

ADDRESSES: Please refer to Docket ID NRC–2014–0004 when contacting the NRC about the availability of information regarding this document. You may obtain publicly-available information related to this document using any of the following methods:

- Federal Rulemaking Web site: Go to *http://www.regulations.gov* and search for Docket ID NRC–2014–0004. Address questions about NRC dockets to Carol Gallagher; telephone: 301–287–3422; email: *Carol.Gallagher@nrc.gov*. For technical questions, contact the individual listed in the **FOR FURTHER INFORMATION CONTACT** section of this document.
- NRC's Agencywide Document Access and Management System (ADAMS): You may obtain publicly-available documents online in the NRC Library at *http://www.nrc.gov/reading-rm/doc-collections*. For problems with ADAMS, please contact the NRC's Public Document Room (PDR) reference staff at 1–800–397–4209, 301–415–4737, or by email to *pdr.resource@nrc.gov*. The final LR–ISG–2013–01 is available electronically in ADAMS under Accession No. ML14225A059. The SRP–LR and GALL Report are available in ADAMS under Accession Nos. ML103490036 and ML103490041, respectively.
- NRC's PDR: You may examine and purchase copies of public documents at the NRC's PDR, Room O1–F21, One White Flint North, 11555 Rockville Pike, Rockville, Maryland 20852.
- NRC's Interim Staff Guidance Web site: LR–ISG documents are also available online under the ''License Renewal'' heading at *http://www.nrc.gov/reading-rm/doc-collections/isg/license-renewal.html*.

FOR FURTHER INFORMATION CONTACT: William Holston, Office of Nuclear Reactor Regulation, U.S. Nuclear Regulatory Commission, Washington, DC 20555–0001; telephone: 301–415–8573; email: *William.Holston@nrc.gov*.

SUPPLEMENTARY INFORMATION

Background

The NRC issues LR–ISGs to communicate insights and lessons learned and to address emergent issues not covered in license renewal guidance documents, such as the GALL Report and SRP–LR. In this way, the NRC staff and stakeholders may use the guidance in an LR–ISG document before it is incorporated into a formal license renewal guidance document revision. The NRC staff issues LR–ISGs in accordance with the LR–ISG Process, Revision 2 (ADAMS Accession No. ML100920158), for which a notice of availability was published in the **Federal Register** on June 22, 2010 (75 FR 35510).

The NRC staff has developed LR–ISG–2013–01 to address loss of coating or lining integrity for internal coatings applied to the internal surfaces of piping, piping components, heat exchangers, and tanks within the scope of license renewal. On January 10, 2014 (79 FR 1904), the NRC requested public comments on draft LR–ISG–2013–01 (ADAMS Accession No. ML13262A442).

These changes address new recommendations related to managing loss of coating integrity for coatings applied to the internal surfaces of piping, piping components, heat exchangers, and tanks within the scope of part 54 of Title 10 of the *Code of Federal Regulations* (10 CFR), ''Requirements for Renewal of Operating Licenses for Nuclear Power Plants.'' The NRC published Revision 2 of the SRP–LR and the GALL Report in December 2010, and they are available in ADAMS under Accession Nos. ML103490036 and ML103490041, respectively.

The NRC received comments from the Nuclear Energy Institute by letter dated February 24, 2014 (ADAMS Accession No. ML14058A181), and Daniel L. Cox, PE, by letter dated February 7, 2014 (ADAMS Accession No. ML14055A250). No other comments were submitted. The NRC considered these comments in developing the final LR–ISG. Detailed responses to the comments can be found in Appendix E of the final LR–ISG.

The final LR–ISG–2013–01 is approved for NRC staff and stakeholder use and will be incorporated into NRC's next formal license renewal guidance document revision.

Backfitting and Issue Finality

Issuance of this final LR–ISG does not constitute backfitting as defined in 10 CFR 50.109 (the Backfit Rule) and is not otherwise inconsistent with the issue finality provisions in 10 CFR Part 52, ''Licenses, Certifications, and Approvals for Nuclear Power Plants.'' As discussed in the ''Backfitting and Issue Finality'' section of the final LR–ISG–2013–01, the LR–ISG is directed to holders of operating licenses or combined licenses who are currently in the license renewal process. The LR–ISG is not directed to holders of operating licenses or combined licenses until they apply for license renewal. The LR–ISG is also not directed to licensees who already hold renewed operating or combined licenses.

Dated at Rockville, Maryland, this 6th day of November, 2014.

For the Nuclear Regulatory Commission.

Christopher G. Miller,

Director, Division of License Renewal, Office of Nuclear Reactor Regulation.

[FR Doc. 2014–27042 Filed 11–13–14; 8:45 am]

BILLING CODE 7590–01–P

NUCLEAR REGULATORY COMMISSION

Advisory Committee on Reactor Safeguards (ACRS), Meeting of the ACRS Subcommittee on Fukushima; Notice of Meeting

The ACRS Subcommittee on Fukushima will hold a meeting on November 20–21, 2014, Room T–2B1, 11545 Rockville Pike, Rockville, Maryland.

The meeting will be open to public attendance with the exception of portions that may be closed to protect unclassified safeguards information pursuant to 5 U.S.C. 552b(c)(3). The agenda for the subject meeting shall be as follows:

Thursday, November 20, 2014–8:30 a.m. Until 5:00 p.m.; Friday, November 21, 2014–8:30 a.m. Until 12:00 p.m.

The Subcommittee will discuss with the NRC staff and industry representatives their experience reviewing and responding to Order EA–12–049, ''Order Modifying Licenses with Regard to Requirements for Mitigation Strategies for Beyond-Design-Basis External Events.'' In addition, the Subcommittee will review draft proposed rule language and associated bases for codifying Order EA–12–049 as part of the Mitigation of Beyond-Design-Basis Events Rulemaking. The Subcommittee will hear presentations by and hold discussions with the NRC staff and other interested persons regarding this matter. The Subcommittee will gather information, analyze relevant issues and facts, and formulate proposed positions and actions, as appropriate, for deliberation by the Full Committee.

Members of the public desiring to provide oral statements and/or written comments should notify the Designated Federal Official (DFO), Michael Snodderly (Telephone 301–415–2241 or Email: *Michael.Snodderly@nrc.gov*) five days prior to the meeting, if possible, so that appropriate arrangements can be made. Thirty-five hard copies of each presentation or handout should be provided to the DFO thirty minutes before the meeting. In addition, one electronic copy of each presentation should be emailed to the DFO one day before the meeting. If an electronic copy cannot be provided within this timeframe, presenters should provide the DFO with a CD containing each presentation at least thirty minutes before the meeting. Electronic recordings will be permitted only during those portions of the meeting that are open to the public. Detailed procedures for the conduct of and participation in ACRS meetings were published in the **Federal Register** on October 13, 2014 (79 FR 59307–59308).

Detailed meeting agendas and meeting transcripts are available on the NRC Web site at *http://www.nrc.gov/reading-rm/doc-collections/acrs.* Information regarding topics to be discussed, changes to the agenda, whether the meeting has been canceled or rescheduled, and the time allotted to present oral statements can be obtained from the Web site cited above or by contacting the identified DFO. Moreover, in view of the possibility that the schedule for ACRS meetings may be adjusted by the Chairman as necessary to facilitate the conduct of the meeting, persons planning to attend should check with these references if such rescheduling would result in a major inconvenience.

If attending this meeting, please enter through the One White Flint North Building, 11555 Rockville Pike, Rockville, MD. After registering with security, please contact Mr. Theron Brown (Telephone 240–888–9835) to be escorted to the meeting room.

Dated: November 5, 2014.

Cayetano Santos,

Chief, Technical Support Branch, Advisory Committee on Reactor Safeguards.

[FR Doc. 2014–27035 Filed 11–13–14; 8:45 am]

BILLING CODE 7590–01–P

SECURITIES AND EXCHANGE COMMISSION

[Release No. 34–73562; File No. SR–NASDAQ–2014–020]

Self-Regulatory Organizations; The NASDAQ Stock Market LLC; Notice of Filing of Amendment No. 1 and Order Granting Accelerated Approval of a Proposed Rule Change, as Modified by Amendment No. 1 Thereto, Relating to Listing and Trading of Exchange-Traded Managed Fund Shares

November 7, 2014.

I. Introduction

On February 26, 2014, The NASDAQ Stock Market LLC (''Nasdaq'' or ''Exchange'') filed with the Securities and Exchange Commission (''Commission''), pursuant to Section 19(b)(1) of the Securities Exchange Act of 1934 (''Act'' or ''Exchange Act'') [1] and Rule 19b–4 thereunder,[2] a proposed rule change to adopt Nasdaq Rule 5745, which would govern the listing and trading of Exchange-Traded Managed Fund Shares (''ETMF Shares'' or ''ETMFs''), and to amend related references under Nasdaq Rules 4120, 5615, IM–5615–4, and 5940. The proposed rule change was published for comment in the **Federal Register** on March 12, 2014.[3] The Commission initially received four comment letters on the proposal.[4] On April 23, 2014, pursuant to Section 19(b)(2) of the Act,[5] the Commission designated a longer period within which to either approve the proposed rule change, disapprove the proposed rule change, or institute proceedings to determine whether to disapprove the proposed rule change.[6] On June 9, 2014, the Commission instituted proceedings to determine whether to approve or disapprove the proposed rule change.[7] In response to the Order Instituting Proceedings, the Commission received one comment letter on the proposal.[8] On September 4,

[1] 15 U.S.C. 78s(b)(1).

[2] 17 CFR 240.19b–4.

[3] *See* Securities Exchange Act Release No. 71657 (Mar. 6, 2014), 79 FR 14092 (Mar. 12, 2014) (SR–NASDAQ–2014–020) (''Notice'').

[4] *See* Letters to the Commission from Christopher Davis, President, Money Management Institute, dated March 27, 2014 (''MMI Letter''); Robert Tull, President, Robert Tull & Co., dated March 31, 2014 (''Tull Letter''); Avi Nachmany, Co-Founder, Director of Research, E.V.P., Strategic Insight, dated Apr. 1, 2014 (''Strategic Insight Letter''); and Eric Noll, President and Chief Executive Officer, ConvergEx Group, LLC, dated Apr. 1, 2014 (''ConvergEx Letter'').

[5] 15 U.S.C. 78s(b)(2).

[6] *See* Securities Exchange Act Release No. 72007 (Apr. 23, 2014), 79 FR 24045 (Apr. 29, 2014) (SR–NASDAQ–2014–020). The Commission determined that it was appropriate to designate a longer period within which to take action on the proposed rule change so that it had sufficient time to consider the proposed rule change. Accordingly, the Commission designated June 10, 2014 as the date by which it should approve, disapprove, or institute proceedings to determine whether to disapprove the proposed rule change.

[7] *See* Securities Exchange Act Release No. 72350 (Jun. 9, 2014), 79 FR 33959 (Jun. 13, 2014) (SR–NASDAQ–2014–020) (''Order Instituting Proceedings''). In the Order Instituting Proceedings, the Commission noted, among other things, that questions remained as to whether the Exchange's proposal is consistent with the requirements of Section 6(b)(5) of the Act, specifically whether it is designed to prevent fraudulent and manipulative acts and practices, promotes just and equitable principles of trade, and protects investors and the public interest.

[8] *See* Letter to the Commission from Thomas E. Faust, Jr., Chairman and Chief Executive Officer, on behalf of Eaton Vance Corporation and its subsidiaries Eaton Vance Management and Navigate Fund Solution LLC (collectively, ''Eaton Vance''), dated July 3, 2014 (''Eaton Vance Letter''). Eaton Vance Management and the Eaton Vance ETMF

Continued

2014, the Commission issued a notice of designation of a longer period for Commission action on proceedings to determine whether to approve or disapprove the proposed rule change.[9] On September 12, 2014, the Exchange filed Amendment No. 1 to the proposed rule change.[10] Thereafter, the Commission received two additional comment letters on the proposed rule change.[11] The Commission is publishing this notice to solicit comments from interested persons on Amendment No. 1 to the proposed rule change and is approving the proposed rule change, as modified by Amendment No. 1 thereto, on an accelerated basis.

II. Description of the Proposal [12]

The Exchange proposes to adopt new Nasdaq Rule 5745 to govern the listing and trading of ETMF Shares.[13] At this time, Nasdaq is not proposing to list any ETMF Shares under new Nasdaq Rule 5745.[14] Unlike actively-managed exchange-traded funds, ETMFs will not be required under Nasdaq Rule 5745 to disclose their holdings on a daily basis.[15] The Exchange states that, as required for traditional open-end investment companies, ETMFs will disclose their full portfolio positions at least quarterly, with a delay (not to exceed 60 days). Nasdaq will deem ETMF Shares to be equity securities, thus rendering trading in ETMF Shares subject to Nasdaq's existing rules governing the trading of equity securities.

ETMF Shares will trade on Nasdaq using a new trading protocol called ''NAV-Based Trading.'' [16] In NAV-Based Trading, as described in Nasdaq Rule 5745(b)(3), all bids, offers, and execution prices will be expressed as a premium/discount (which may be zero) to the ETMF's next-determined net asset value, or NAV [17] (*e.g.,* NAV-$0.01; NAV+$0.01). An ETMF's NAV will be determined each business day, normally as of 4:00 p.m. Eastern Time. Executions using NAV-Based Trading will be binding at the time orders are matched on Nasdaq's facilities, with the transaction prices contingent upon the determination of the ETMF's NAV at the end of the business day.[18]

Member firms will utilize existing order types and interfaces to transmit ETMF Share bids and offers to Nasdaq, which will process ETMF Share trades like trades in shares of ETFs and other listed securities. Nasdaq represents that an ETMF's next-determined NAV will be represented by a proxy price (*e.g.,* 100.00) and a premium/discount of a stated amount to the next-determined NAV to be represented by the same increment/decrement from the proxy price used to denote NAV (*e.g.,* NAV − $0.01 would be represented as 99.99; NAV+$0.01 as 100.01).[19] To avoid potential investor confusion, Nasdaq will work with member firms and providers of market data services to seek to ensure that representations of intraday bids, offers, and execution prices for ETMFs that are made available to the investing public follow the ''NAV − $0.01/NAV+$0.01'' (or similar) display format, rather than displaying proxy prices.

Nasdaq will report intraday bids, offers, and trades for ETMFs in real-time to the Consolidated Tape using the proxy price format. In addition, Nasdaq will disseminate intraday ETMF bids, offers, and trades through a proprietary exchange data feed using the NAV + $.01/NAV − $.01 format.[20] The Exchange will also provide the member firms participating in each ETMF Share trade with a contemporaneous notice of trade execution, indicating the number of ETMF Shares bought or sold and the executed premium/discount to NAV.[21]

After the Reporting Authority (defined below) calculates an ETMF's NAV and provides this information to the Exchange, Nasdaq will price each ETMF Share trade entered into during the day at the ETMF's NAV plus/minus the trade's executed premium/discount. Using the final trade price, each ETMF Share trade will then be disseminated through a proprietary exchange data feed and confirmed to the member firms

Trust have, as co-applicants, filed an application with the Commission seeking relief from certain provisions of the Investment Company Act of 1940 (''1940 Act'') to permit them to offer ETMFs. The Commission published notice of this application (''Notice of Application for Exemptive Relief'') on November 6, 2014. *See* Investment Company Act Release No. 31333 (Nov. 6, 2014) (Eaton Vance Management, et al.; Notice of Application). Navigate Fund Solutions LLC (''Navigate'') owns patent rights and other protected intellectual property relating to ETMFs and NAV-Based Trading that it intends to license to Nasdaq to support the listing and trading of ETMFs that have themselves entered into license agreements with Navigate.

[9] *See* Securities Exchange Act Release No. 72987 (Sept. 4, 2014), 79 FR 53808 (Sept. 10, 2014) (SR–NASDAQ–2014–020).

[10] In Amendment No. 1, Nasdaq confirmed that all ETMFs listed on the Exchange will have a unique identifier associated with their ticker symbols and that, in the systems used to transmit and process transactions in ETMF Shares, an ETMF's next-determined NAV will be represented by a proxy price. Previously, the filing stated that Nasdaq expects all ETMFs listed on the Exchange to have a unique identifier associated with their ticker symbols and that Nasdaq expects an ETMF's next-determined NAV to be represented by a proxy price. Additionally, the Exchange removed references to ETMF entry and annual fees as the Exchange intends to address such fees in a separate filing.

[11] *See* Letters to the Commission from Daniel J. McCabe, Chief Executive Officer, Precidian Investments LLC (''Precidian''), dated October 30, 2014 (''Precidian Letter'') and Thomas E. Faust, Jr., Chairman and Chief Executive Officer, on behalf of Eaton Vance, dated October 31, 2014 (''Eaton Vance Response Letter'').

[12] The Commission notes that more detailed information regarding the proposal is included in the Notice. *See* Notice, *supra* note 3.

[13] Nasdaq intends to enter into a license agreement to allow for the listing and trading of ETMF Shares on the Exchange. The Exchange states that aspects of ETMFs and NAV-Based Trading (described below) are protected intellectual property subject to issued and pending U.S. patents held by Navigate, a wholly owned subsidiary of Eaton Vance Corporation. Nasdaq will enter into a license agreement with Navigate to allow for NAV-Based Trading on the Exchange of ETMFs that have themselves entered into license agreements with Navigate.

[14] Nasdaq Rule 5745(b)(1) provides that Nasdaq will file separate proposals under Section 19(b) of the Act before the listing of any specific ETMF Shares.

[15] Nasdaq lists actively-managed funds under Nasdaq Rule 5735, which requires the identities and quantities of the securities and other assets held by a fund to be disseminated at least once daily. *See* Nasdaq Rule 5735 (d)(2)(B)(i).

[16] Nasdaq represents that all ETMFs listed on the Exchange will have a unique identifier associated with their ticker symbols, which would indicate that their Shares are traded using NAV-Based Trading. *See* Amendment No. 1, *supra* note 10.

[17] As with other registered open-end investment companies, the NAV of ETMF Shares generally would be calculated daily Monday through Friday as of the close of regular trading on the New York Stock Exchange, normally 4:00 p.m. Eastern Time. NAV would be calculated by dividing the ETMF's net asset value by the number of ETMF Shares outstanding. *See* Notice at note 9, *supra* note 3.

[18] Because, in NAV-Based Trading, prices of executed trades are not determined until the reference NAV is calculated, buyers and sellers of ETMF Shares during the trading day will not know the final value of their purchases and sales until the end of the trading day.

[19] *See* Amendment No. 1, *supra* note 10. Order transmission and processing systems currently in common use by exchanges and member firms are generally not designed to accommodate pricing arrangements, such as NAV-Based Trading, in which bids, offers, and execution prices are determined by reference to a price or value that is unknown at the time of trade execution. Compared to the alternative of building and maintaining (and requiring member firms to build and maintain) a dedicated NAV-Based Trading order transmission and processing system, the Exchange believes that the proposed approach (using, for processing purposes, a proxy price to represent next-determined NAV) offers major advantages in terms of cost, efficiency, and time to implement. To convert proxy prices used to represent intraday bids, offers, and execution prices into prices expressed in relation to the next-determined NAV, member firms would subtract from the reported proxy price (*e.g.,* 99.99) the proxy for NAV (*e.g.,* 100.00) and insert ''NAV'' in front of the calculated number expressed in dollars (*e.g.,* 99.99 − 100.00 = −0.01, expressed as ''NAV − $0.01'').

[20] The ETMF bid, offer, and trade information disseminated to the Consolidated Tape will be the same information disseminated though a proprietary Nasdaq data feed and will differ only in the format in which the information is provided (proxy price format on the Consolidated Tape versus NAV plus or minus format on the proprietary Nasdaq data feed).

[21] All orders to buy or sell an ETMF Share that are not executed on the day the order is submitted would be automatically cancelled as of the close of trading on such day.

participating in the trade, supplementing the previously provided information with final pricing information. After the final trade price is determined, Nasdaq will deliver the ETMF Share trading data to the National Securities Clearing Corporation (''NSCC'') for clearance and settlement, following the same processes used for the clearance and settlement of trades in other exchange-traded securities.

Proposed Listing Rules for Exchange-Traded Managed Fund Shares

Nasdaq Rule 5745(b)(1) provides that Nasdaq will file separate proposals under Section 19(b) of the Act before the listing of any specific ETMF Shares. Nasdaq Rule 5745(b)(2) provides that transactions in ETMF Shares will occur during Nasdaq's Regular Market Session through 4:00 p.m.[22] Nasdaq Rule 5745(b)(3) provides that ETMF Shares will trade on Nasdaq at market-determined premiums or discounts to the next-determined NAV, and that the minimum price variation for quoting and entry of orders in ETMF Shares will be $0.01. Nasdaq Rule 5745(b)(4) provides that Nasdaq will implement written surveillance procedures for ETMF Shares. Nasdaq Rule 5745(b)(5) provides that, for ETMF Shares based on an international or global portfolio, the statutory prospectus or the application for exemption from provisions of the 1940 Act for such series of ETMF Shares must state that such series must comply with the federal securities laws in accepting securities for deposit and satisfying redemptions with securities, including that the securities accepted for deposit and the securities used to satisfy redemption requests are sold in transactions that would be exempt from registration under the Securities Act of 1933 (''Securities Act'').

Definitions. Nasdaq Rule 5745(c)(1) defines the term ''ETMF Share'' as a security that: (1) Represents an interest in a registered investment company organized as an open-end management investment company that invests in a portfolio of securities and other assets selected and managed by the ETMF's investment adviser consistent with the ETMF's investment objectives and policies; (2) is issued in specified aggregate unit quantities in return for a deposit of a specified portfolio of securities and/or a cash amount with a value per Share equal to the ETMF's NAV; (3) when aggregated in the same specified unit quantities, may be redeemed in exchange for a specified portfolio of securities and/or cash with a value per Share equal to the ETMF's NAV; and (4) is traded on Nasdaq or another national securities exchange using NAV-Based Trading, including pursuant to unlisted trading privileges.

In addition, Nasdaq Rule 5745(c)(2) defines the term ''Intraday Indicative Value'' (''IIV'') as the estimated indicative value of an ETMF Share based on current information regarding the value of the securities and other assets held by the ETMF. Nasdaq Rule 5745(c)(3) defines the term ''Composition File'' as the specified portfolio of securities and/or cash that an ETMF will accept as a deposit in issuing ETMF Shares and the specified portfolio of securities and/or cash that an ETMF will deliver in a redemption of ETMF Shares. The current Composition File will be disseminated through the NSCC once each business day before the open of trading in ETMF Shares on Nasdaq on such day. To maintain the confidentiality of current portfolio trading, an ETMF's Composition File generally will not be a pro rata reflection of the ETMF's securities positions. Each security included in the Composition File will be a current holding of the ETMF, but the Composition File generally will not include all of the securities in the ETMF's portfolio or match the weightings of the included securities in the portfolio. The Composition File also may consist entirely of cash, in which case it would not include any of the securities in the ETMF's portfolio.

Nasdaq Rule 5745(c)(4) defines the term ''Reporting Authority'' as Nasdaq, an institution or a reporting service designated by Nasdaq as the official source for calculating and reporting information relating to such series of ETMF Shares, including, but not limited to, the IIV, the amount of any cash distribution to holders of ETMF Shares, NAV, the Composition File, or other information relating to the issuance, redemption, or trading of ETMF Shares. A series of ETMF Shares may have more than one Reporting Authority, each having different functions.

Initial and Continued Listing. Nasdaq Rule 5745(d) sets forth the initial and continued listing criteria applicable to ETMF Shares. Nasdaq Rule 5745(d)(1)(A) provides that, for each series of ETMF Shares, Nasdaq will establish a minimum number of ETMF Shares required to be outstanding at the time of commencement of trading. In addition, under Nasdaq Rule 5745(d)(1)(B), Nasdaq will obtain a representation from the issuer of each series of ETMF Shares that the NAV for such series will be calculated on each business day that the New York Stock Exchange is open for trading and that the NAV will be made available to all market participants at the same time. Under Nasdaq Rule 5745(d)(1)(C), the Reporting Authority that provides the Composition File must implement and maintain, or be subject to, procedures designed to prevent the use and dissemination of material, non-public information regarding the ETMF's portfolio positions and changes in positions.

Nasdaq Rule 5745(d)(2)(A) provides that each series of ETMF Shares could continue to be listed and traded if the IIV for the ETMF Shares is widely disseminated by one or more major market data vendors at intervals of not more than 15 minutes during the Regular Market Session when the ETMF Shares trade on Nasdaq. As stated in the Notice, the purpose of IIVs in NAV-Based Trading is to enable investors to determine the number of ETMF Shares to buy or sell if they want to transact in an approximate dollar amount. For this purpose, Nasdaq believes that dissemination of IIVs at intervals of not more than 15 minutes should generally be sufficient. The Exchange states that more frequent dissemination of IIVs may increase fund costs without apparent benefit and could focus unwarranted investor attention on these disclosures. Moreover, for certain strategies, more frequent IIV disclosure could provide unintended information about current portfolio trading activity to market participants who possess the requisite analytical capabilities, computation power, and motivation to reverse engineer the ETMF's portfolio positions. An ETMF will be permitted to disseminate IIVs at intervals of less than 15 minutes, but would not be required to do so to maintain trading on the Exchange.

Nasdaq Rule 5745(d)(2)(B) provides that Nasdaq will consider the suspension of trading in, or removal from listing of, a series of ETMF Shares under any of the following circumstances: (1) If, following the initial twelve-month period after commencement of trading on the Exchange of a series of ETMF Shares, there are fewer than 50 beneficial holders of the series of ETMF Shares for 30 or more consecutive trading days; (2) if the ETMF's IIV or NAV is no longer calculated or if its IIV, NAV, or Composition File is no longer available to all market participants at the same time; (3) if the ETMF has failed to submit any filings required by the Commission or if Nasdaq is aware that the ETMF is not in compliance with the

[22] Nasdaq Rule 4120(b)(4) defines the Regular Market Session as the trading session from 9:30 a.m. to 4:00 p.m. or 4:15 p.m. ETMF Shares would trade until 4:00 p.m.

conditions of any exemptive order or no-action relief granted by the Commission with respect to the series of ETMF Shares; or (4) if such other event shall occur or condition exists which, in the opinion of Nasdaq, makes further dealings on Nasdaq inadvisable.

Nasdaq Rule 5745(d)(2)(C) provides that, if the IIV of a series of ETMF Shares is not being disseminated as required, Nasdaq may halt trading during the day in which the interruption to the dissemination of the IIV occurs. If the interruption to the dissemination of the IIV persists past the trading day in which it first occurred, Nasdaq will halt trading no later than the beginning of the trading day following the interruption. In addition, if the Exchange becomes aware that the NAV with respect to a series of ETMF Shares is not calculated on each business day that the New York Stock Exchange is open for trading and disseminated to all market participants at the same time, it will halt trading in such series until such time as the NAV is available to all market participants at the same time. If Nasdaq becomes aware that the Composition File with respect to a series of ETMF Shares is not disseminated to all market participants at the same time, it will halt trading in such series until such time as the Composition File is available to all market participants at the same time.

In addition, Nasdaq Rule 5745(d)(2)(D) provides that, upon termination of an ETMF, the ETMF Shares issued in connection with such entity must be removed from listing on Nasdaq. Nasdaq Rule 5745(d)(2)(E) provides that voting rights must be as set forth in the applicable ETMF prospectus.

Additional Provisions. Nasdaq Rule 5745(e) provides that neither Nasdaq, the Reporting Authority, nor any agent of Nasdaq shall have any liability for damages, claims, losses, or expenses caused by any errors, omissions, or delays in calculating or disseminating any of the following: The current portfolio value; the current value of the securities and other assets required to be deposited in connection with the issuance of ETMF Shares; the amount of any dividend-equivalent payment or cash distribution to holders of ETMF Shares; NAV; the Composition File; or other information relating to the purchase, redemption, or trading of ETMF Shares, resulting from any negligent act or omission by Nasdaq, the Reporting Authority, or any agent of Nasdaq, or any act, condition, or cause beyond the reasonable control of Nasdaq, its agent, or the Reporting Authority, including, but not limited to, an act of God, fire, flood, extraordinary weather conditions, war, insurrection, riot, strike, accident, action of government, communications or power failure, equipment or software malfunction, or any error, omission, or delay in the reports of transactions in one or more underlying securities.

Nasdaq Rule 5745(f) applies only to series of ETMF Shares that are the subject of an order by the Commission exempting such series from certain prospectus delivery requirements under Section 24(d) of the 1940 Act and are not otherwise subject to prospectus delivery requirements under the Securities Act. Nasdaq will inform its members regarding application of Nasdaq Rule 5745(f) to a particular series of ETMF Shares by means of an information circular prior to commencement of trading in such series. Under the rule, Nasdaq requires that members provide to all purchasers of a series of ETMF Shares a written description of the terms and characteristics of those securities, in a form prepared by the open-end management investment company issuing such securities, not later than the time a confirmation of the first transaction in such series is delivered to such purchaser. In addition, members shall include such a written description with any sales material relating to a series of ETMF Shares that is provided to customers or the public. Any other written materials provided by a member to customers or the public making specific reference to a series of ETMF Shares as an investment vehicle must include a statement in substantially the following form: ''A circular describing the terms and characteristics of (the series of ETMF Shares) has been prepared by the (open-end management investment company name) and is available from your broker. It is recommended that you obtain and review such circular before purchasing (the series of ETMF Shares).'' A member carrying an omnibus account for a non-member broker-dealer is required to inform such non-member that execution of an order to purchase a series of ETMF Shares for such omnibus account would be deemed to constitute agreement by the non-member to make such a written description available to its customers on the same terms as are directly applicable to members under this rule. Upon request of a customer, a member shall also provide a prospectus for the particular series of ETMF Shares.

Nasdaq Rule 5745(g) provides that, if the investment adviser to an ETMF issuing Shares is a registered broker-dealer or affiliated with a broker-dealer, such investment adviser shall erect a ''fire wall'' between the investment adviser and the broker-dealer personnel or broker-dealer affiliate, as applicable, with respect to access to information concerning the composition and/or changes to such ETMF's portfolio holdings. Personnel who make decisions on the ETMF's portfolio composition must be subject to procedures designed to prevent the use and dissemination of material, non-public information regarding the applicable ETMF portfolio.

Other Rule Changes

The Exchange is also making conforming changes to: (1) Nasdaq Rule 4120(a)(9) and (10) to add provisions applicable to ETMF Shares with respect to trading halts; (2) Nasdaq Rule 4120(b)(4)(A) and (E) to modify certain defined terms to include references to ETMF Shares; and (3) Nasdaq Rule 5615(a)(5) and IM–5615–4 to add references to ETMFs for purposes of certain corporate governance requirements.[23]

III. Summary of Comment Letters

As noted above, the Commission received a total of seven comment letters from six commenters concerning the Exchange's proposal.[24] Five of the commenters support the proposal, and one commenter opposes the proposal. Generally, the supporting commenters believe that ETMFs could offer investment managers and investors a tax-efficient alternative to today's mutual funds.[25] In addition to the benefits of tax-efficiency, some commenters state their belief that ETMFs would offer the benefits of lower costs to investors as a result of lower expenses,[26] and one commenter states its belief that a benefit would be transparency of ETMF transaction costs.[27] The same commenter also states its view that the non-disclosed nature of the ETMF portfolio would serve as a barrier to front-running of portfolio trades of actively managed funds and that the proposed ETMFs would promote renewed competition in the fund marketplace by encouraging investment managers concerned about

[23] The Exchange also is making certain other minor technical changes to these rules unrelated to ETMFs. Specifically, the Exchange is amending Rules 4120(a)(9), (b)(4)(A), and (b)(4)(E) to include appropriate references to various derivative securities defined in Rule 5711, and to make certain other typographical corrections and clarifications.

[24] *See supra* notes 4, 8, and 11.

[25] *See* MMI Letter; Tull Letter; Strategic Insight Letter; ConvergEx Letter at 1; and Eaton Vance Letter at 2, *supra* notes 4 and 8.

[26] *See* Tull Letter; Strategic Insight Letter; and ConvergEx Letter at 1, *supra* note 4.

[27] *See* Tull Letter, *supra* note 4.

maintaining the confidentiality of their portfolio trading to offer their leading strategies in a better performing product structure.[28] The opposing commenter, however, believes that ETMFs would likely not provide tax benefits and may cost more to operate than existing ETFs, because the ETMF will be forced to rebalance its portfolio every time there is a creation or redemption causing the fund to incur additional costs.[29] In response to the opposing commenter, Eaton Vance, the sponsor of ETMFs, states its view that the more relevant comparison for ETMFs is mutual funds and that it expects ETMFs to achieve significant performance and tax efficiency advantages over similar mutual funds by utilizing in-kind purchases and redemptions and by imposing Creation Unit transaction fees to offset the associated processing and trading costs to the fund.[30] The opposing commenter also states its view that NAV-Based Trading provides no discernable benefit to investors and would likely add to investor confusion because the proposal would allow the listing of products on an exchange that would not trade at current market prices.[31] In response, Eaton Vance acknowledges that ETMF Shares will not trade at prices determined intraday, but notes that each ETMF's registration statement, Web site, and any advertising or marketing materials will include prominent disclosure of this fact.[32] Eaton Vance further responds with its view that ETMFs provide several advantages over traditional mutual funds [33] and actively managed ETFs.[34]

In addition, several commenters state their belief about the potential positive impact the proposed ETMF product may have on arbitrage and pricing. Specifically, one commenter states its view that NAV-Based Trading for ETMFs should expand market maker opportunities as the arbitrage moves towards order management control and away from sophisticated arbitrage pricing models using real-time pricing that makes it difficult for an investor to calculate personal market entry and exit costs.[35] Another commenter states its view that, because ETMFs could promote competition in the fund marketplace, such competition might enable ETMFs to trade close to the underlying fund value on a consistent basis.[36] The opposing commenter, however, believes that market professionals will be unable to effectively hedge their ETMF positions due to a stale and possibly inaccurate IIV that is published every 15 minutes.[37] Eaton Vance responds to the opposing commenter by stating that the sole purpose of the IIV is to help investors determine the number of ETMF Shares to buy or sell if they want to transact in an approximate dollar amount and that market makers will never have any reason to refer to the IIV in connection with their market making function.[38] In response to the need for a market maker to hedge their ETMF positions, Eaton Vance asserts that a market maker holding positions in ETMF Shares is not exposed to intraday market risk, and, as such, there would be no need for market makers to hedge their positions intraday.[39]

One commenter states its view that the promise of ETMFs can be realized if a ''common Chassis'' is adopted by multiple fund managers, who would then simultaneously educate the marketplace about the benefits of ETMFs.[40] The same commenter also believes that the adoption curve of ETMFs might parallel the acceleration in the use of mutual funds triggered by the introduction in the early 1990s of the Schwab's Mutual Fund OneSource® supermarket, when numerous fund managers articulated the benefit of a common administrative platform.[41] The commenter concludes that ETMFs have the potential to significantly improve returns to investors in actively-managed funds, and to encourage additional investment and savings by millions of American over the coming decades.[42]

In response to the questions raised in the Order Instituting Proceedings regarding the ability of market participants to fully understand NAV-Based Trading and the public availability of information for ETMFs, Eaton Vance submitted a comment letter stating that the Exchange intends to provide members with a detailed explanation of NAV-Based Trading through a Trading Alert and will inform members of the special characteristics and risks associated with trading ETMF Shares in an information circular—both to be issued prior to the commencement of ETMF trading.[43] Additionally, Eaton Vance states that, in conjunction with the Exchange's communications to its members, it will also educate the marketplace through its Web site materials and disclosures in fund prospectuses and marketing literature by focusing on the key distinctions of ETMF investing which will include: (a) How to enter orders; (b) how to use IIV to help size ETMF orders; (c) the portfolio disclosures of ETMFs; and (d) the risks of NAV-Based Trading.[44] Further, Eaton Vance emphasizes that it would make available an extensive library of ETMF educational materials and would maintain a Web site to provide a comprehensive, one-stop source of market information and investor education regarding ETMFs and NAV-Based Trading.[45] Eaton Vance believes that these methods will provide adequate information to support NAV-Based Trading.[46]

In response to the Commission's concerns regarding public availability of ETMF trading information, Eaton Vance states that NAV-Based trade prices, best bids and offers for ETMF Shares, volume of ETMF Shares traded, and other intraday trading information will be continuously available for ETMFs on a real-time basis throughout each trading day on brokers' computer terminals and electronic market data services.[47] In addition, Eaton Vance represents that it and Nasdaq will work with the Exchange's members and providers of market data services to ensure that representation of intraday bids, offers, and trade prices for ETMFs follow a ''NAV − $0.01/NAV+$0.01''

[28] *Id.*

[29] *See* Precidian Letter at 5–6, *supra* note 11. Precidian states its view that the fewer securities contained in the creation or redemption basket, the worse the problem becomes.

[30] *See* Eaton Vance Response Letter at 6, *supra* note 11.

[31] *See* Precidian Letter at 2, *supra* note 11. Precidian states its belief that intraday liquidity is a foundational principle of exchanges and the secondary market as a whole.

[32] *See* Eaton Vance Response Letter at 3, *supra* note 11. Eaton Vance also responded to concerns about investor confusion in its first comment letter. *See infra* notes 43–51 and accompanying text.

[33] Eaton Vance believes that the potential advantages ETMFs have over mutual funds are: (a) Protecting fund shareholders from the dilutive effects of other shareholders' transactions; (b) protecting fund shareholders from tax realizations in connection with other shareholders' transactions; (c) realizing savings in shareholder servicing and other fund expenses; and (d) enhancing the competitiveness of fund distribution. *See* Eaton Vance Response Letter at 3–4, *supra* note 11.

[34] Eaton Vance believes that the potential advantages ETMFs have over actively managed ETFs are: (a) Maintaining the confidentiality of portfolio trading activity; (b) providing trade execution cost transparency and quality control to fund investors; and (c) facilitating tight bid-ask spreads and narrow premiums/discounts in secondary market trading. *See* Eaton Vance Response Letter at 3–4, *supra* note 11.

[35] *See* Tull Letter, *supra* note 4.

[36] *See* ConvergEx Letter at 2, *supra* note 4.

[37] *See* Precidian Letter at 5, *supra* note 11.

[38] *See* Eaton Vance Response Letter at 5, *supra* note 11.

[39] *See* Eaton Vance Response Letter at 6, *supra* note 11.

[40] *See* Strategic Insight Letter, *supra* note 4.

[41] *Id.*

[42] *Id.*

[43] *See* Eaton Vance Letter at 3, *supra* note 8.

[44] *Id.*

[45] *See* Eaton Vance Letter at 4, *supra* note 8.

[46] *Id.*

[47] *Id.*

display format in an effort to avoid investor confusion.[48] Eaton Vance further states that all ETMFs listed on Nasdaq will have a unique identifier associated with their ticker symbols indicating that the Shares are trading using NAV-Based Trading.[49] Finally, Eaton Vance states that it will maintain a public Web site for ETMFs that will disclose, among other things, detailed fund information and contain links to current fund documents, including a fact sheet, summary and full prospectuses, statement of additional information, and shareholder reports for each fund.[50] According to Eaton Vance, this Web site will also display per Share, the prior trading day's NAV and the following trading information for such day: (a) Intraday high, low, average, and closing prices of Shares in exchange trading; (b) the midpoint of the highest bid and lowest offer prices as of the close of exchange trading (expressed as a premium/discount to NAV); (c) the spread between highest bid and lowest offer prices as of the close of exchange trading; and (d) volume of Shares traded. Eaton Vance believes that such trading information will provide useful guidance to current buyers and sellers of Shares and accordingly believes there will be minimal risk of investor confusion.[51]

The opposing commenter raises several other concerns.[52] The opposing commenter states its belief that a market professional buying ETMF Shares from an investor would have an economic interest in providing the worst price to the investor.[53] In response, Eaton Vance states that ETMF Shares are no different from other traded securities and that market forces exert pressure on market professionals to offer competitive prices to investors, so that a market maker who seeks to trade ETMF Shares at uncompetitive prices will not attract the volume of trading required to earn meaningful profits.[54] The opposing commenter also states its view that traders who accumulate large ETMF positions will be incentivized to move the NAV in their favor.[55] Eaton Vance responds with its view that this is ''completely false,'' as the amount of profit a market maker or other trader earns by trading ETMFs is not affected by movements in the NAV.[56] Eaton Vance argues that it doesn't matter whether an ETMF's NAV has moved higher or lower intraday as no level of NAV provides market makers with more profit than any other NAV.[57]

The opposing commenter also argues that because an ETMF's trade price is not determined until the end of the day, there may be significant problems for brokers and investors with respect to determining the buying power of an investor's account.[58] For example, the commenter argues that an investor with a cash account may not have sufficient funds in the account to cover a purchase of an ETMF entered into during the day if the ETMF's NAV at the end of the day is higher than the investor expected.[59] In response, Eaton Vance states that, based on extensive discussions with multiple broker-dealers and a review of broker-dealer account funding guidelines, Eaton Vance believes that broker-dealer account control procedures are adequate to accommodate trading of ETMF Shares and to mitigate the associated risks of inadequate investor account funding.[60] The opposing commenter further questions how brokers will be able to calculate their net capital at any point in time during the day, noting its view that a firm with ETMF positions would not be able to determine the value of its ETMF positions during the day as quotes and last-sale prices are based on a future price, and the IIV is only published at 15 minute intervals.[61] In response, Eaton Vance states its belief that ETMFs are likely not the only asset held by broker-dealers that does not lend itself to minute-by-minute intraday updated valuations.[62] Eaton Vance further states that, based on how it expects ETMF market making to function, it does not believe that market makers will hold large ETMF inventory positions and that an ETMF market maker operating within relatively tight limits of its net capital requirement may build a buffer into the valuation of its ETMF positions to ensure continued capital adequacy.[63]

Further, the opposing commenter states its view that inclusion of foreign stocks in an ETMF's portfolio will create problems in calculating the ETMF's NAV.[64] The opposing commenter argues that if a portfolio includes stocks that trade in different time zones, it may be impossible to accurately set the NAV until the foreign market opens for trading.[65] The opposing commenter believes that this would require the NSCC to reduce the settlement cycle for the portfolio's securities and would lessen the time that brokers can prepare confirmations, resulting in a delay in calculating margin calls and other time critical problems, such as stale pricing of the IIV.[66] In response, Eaton Vance states that mutual funds holding foreign securities routinely apply fair value pricing procedures to determine their daily NAV, and it expects ETMFs to do the same.[67]

Finally, the opposing commenter raises the concern that brokerage firms, vendors, the Consolidated Tape, and quote system operators will have to alter their systems to support the ETMFs' price quotations of NAV+/NAV− notations.[68] With regard to the Consolidated Tape, Eaton Vance does not believe that this is a valid concern, stating that ETMF trading prices and quotes will be reported in proxy price format requiring no special changes to the Consolidated Tape.[69] Eaton Vance further states that the process of buying and selling ETMFs will be similar to buying and selling other exchange-traded securities, with the only significant distinction being that the price limits for limit orders will be expressed relative to NAV rather than as an absolute dollar price.[70] Further, according to Eaton Vance, the execution, reporting, clearance, and

[48] *Id.* The opposing commenter believes that ETMF pricing displayed in proxy prices will be confusing to investors. *See* Precidian Letter at 5, *supra* note 11. In response, Eaton Vance reiterates that it and the Exchange are working with member firms and providers of market data to ensure that representations of intraday bids, offers, and execution prices for ETMFs that are available to the public consistently follow the NAV + $.01/NAV − $.01 display format. *See* Eaton Vance Response Letter at 5, *supra* note 11.

[49] *See* Eaton Vance Letter at 5, *supra* note 8. *See also* Eaton Vance Response Letter at 5, *supra* note 11.

[50] *See* Eaton Vance Letter at 5, *supra* note 8.

[51] *Id.*

[52] The opposing commenter states its belief that ETMFs are not redeemable securities. *See* Precidian Letter at 2, *supra* note 11. In response, Eaton Vance states that it believes ETMFs satisfy the definition of a ''redeemable security'' as defined in the 1940 Act, but because the shares would not be individually redeemable, Eaton Vance has requested exemptive relief under the 1940 Act. *See* Eaton Vance Response Letter at 2, *supra* note 11. Eaton Vance's request for exemptive relief is currently before the Commission. *See supra* note 8.

[53] *See* Precidian Letter at 2, *supra* note 11.

[54] *See* Eaton Vance Response Letter at 3, *supra* note 11.

[55] *See* Precidian Letter at 2, *supra* note 11.

[56] *See* Eaton Vance Response Letter at 3, *supra* note 11.

[57] *Id.* Eaton Vance's response does not appear to take into account a trader holding a position overnight or longer. *See infra* notes 82–83 and accompanying text.

[58] *See* Precidian Letter at 3, *supra* note 11.

[59] *See id.*

[60] *See* Eaton Vance Response Letter at 4, *supra* note 11.

[61] *See* Precidian Letter at 4, *supra* note 11.

[62] *See* Eaton Vance Response Letter at 4, *supra* note 11.

[63] *Id.*

[64] *See* Precidian Letter at 3–4, *supra* note 11.

[65] *See id.* at 3, *supra* note 11.

[66] *See id.* at 4, *supra* note 11.

[67] *See* Eaton Vance Response Letter at 4, *supra* note 11.

[68] *See* Precidian Letter at 4, *supra* note 11.

[69] *See* Eaton Vance Response Letter at 5, *supra* note 11.

[70] *See id.*

settlement of ETMF trades will be substantially the same as for other exchange-traded securities. Separately, based on discussions with broker-dealers and providers of market data services, Eaton Vance believes that any systems modifications to accommodate ETMFs will be relatively modest and can readily be achieved in a timely manner.[71]

IV. Discussion and Commission Findings

After careful review, the Commission finds that the proposed rule change is consistent with the requirements of the Act and the rule and regulations thereunder applicable to a national securities exchange.[72] In particular, the Commission finds that the proposed rule change is consistent with Section 6(b)(5) of the Act,[73] which requires that the rules of an exchange be designed, among other things, to prevent fraudulent and manipulative acts and practices, to promote just and equitable principles of trade, and to protect investors and the public interest. The Commission finds that Nasdaq's proposal contains adequate rules and procedures to govern the listing and trading of ETMFs on the Exchange. Except for certain requirements relating to the daily disclosure of the fund portfolio, dissemination of the IIV, and NAV-Based trading (as discussed further below), the proposed listing standards of new Nasdaq Rule 5745 are substantively identical to the provisions of Nasdaq Rule 5735, which governs the listing of Managed Fund Shares on the Exchange. Further, all securities listed under proposed Nasdaq Rule 5745 will be subject to the full panoply of Nasdaq rules and procedures that currently govern the trading of equity securities on the Exchange, except that ETMFs will trade using NAV-Based Trading.

As noted, ETMF Shares will not provide a ''Disclosed Portfolio'' on a daily basis.[74] According to the Exchange, the purpose of the daily portfolio disclosure requirement for actively-managed ETFs is to provide market makers in those products with the portfolio information needed to hedge the intraday market risk they assume as they take inventory positions in the ETF shares in connection with their market making activities. Nasdaq states that, in ETF trading, a condition to maintaining a tight relationship between market-based trading prices for the ETF shares and contemporaneous ETF underlying portfolio values is that market makers have sufficient information regarding portfolio positions to enable them to earn reliable arbitrage profits by entering into long (or short) positions in ETF shares and offsetting short (or long) positions in the underlying holdings (or a suitable proxy). Nasdaq states that, in ETMF trading, by contrast, a market maker will assume no intraday market risk in connection with its inventory positions in ETMF shares because all ETMF Share transaction prices are based on the next-determined NAV.[75] According to the Exchange, the process that connects ETMF trading prices to the NAV of the shares of ETMFs is effected at the end of each trading day when a market maker creates (redeems) Creation Units of ETMF Shares through an Authorized Participant to offset the net amount of ETMF Shares it has sold (bought) over the course of the trading day, and buys (sells) the quantity of Composition File instruments corresponding to the number of Creation Units created (redeemed).[76]

The Exchange states that, different from actively-managed ETFs, ETMFs offer market makers a profit opportunity that does not depend on either corresponding intraday adjustments in ETMF Share and underlying portfolio positions or the use of a hedge portfolio to manage intraday market risk.[77] According to the Exchange, because the mechanism that underlies ETMF trading is simpler, more reliable, and exposes market makers to less risk than actively-managed ETF arbitrage, market makers should require less profit inducement to establish and maintain markets in ETMF Shares than for actively-managed ETFs, thereby enabling ETMFs to routinely trade at smaller premiums/discounts and narrower bid-ask spreads.

The Commission agrees that ETMFs will offer market makers a profit opportunity that does not require intraday hedging of ETMF Share price movements or changes in the value of the underlying portfolio positions. Because market makers will not need to engage in intraday hedging, the Commission believes that daily portfolio disclosure is not necessary. The Commission believes that NAV-Based Trading removes the need for market makers to hedge their ETMF positions intraday. Because all ETMF Share transaction prices are based on the next-determined NAV, a market maker will assume no intraday market risk in connection with its ETMF inventory positions and will not need to hedge the position. At the end of each day, a market maker will be able to offset its position of ETMF Shares by creating or redeeming through an authorized participant.[78]

The opposing commenter also raises a concern that market professionals will have an economic incentive to provide the worst price to an investor for ETMF Shares.[79] In response, Eaton Vance states that ETMF Shares are no different from other traded securities and that market forces exert pressure on market professionals to offer competitive prices to investors, so that a market maker who seeks to trade ETMF Shares at uncompetitive prices will not attract the volume of trading required to earn

[71] *See id.*

[72] In approving this proposed rule change, the Commission has considered the proposed rule's impact on efficiency, competition, and capital formation. *See* 15 U.S.C. 78c(f).

[73] 15 U.S.C. 78f(b)(5).

[74] In contrast, Nasdaq Rule 5735 requires Managed Fund Shares to disclose publicly their full portfolio positions at least once daily.

[75] According to the Exchange, whether an ETMF's underlying value goes up or down over the course of a trading day would not affect how much profit a market maker earns by selling (or buying) ETMF Shares in the market at a net premium (discount) to NAV, and then creating (redeeming) an offsetting number of ETMF Shares at the end of the day in transactions with the ETMF. The Exchange states that no intraday market risk means no requirement for intraday hedging, and therefore no associated requirement for portfolio disclosure to maintain a tight relationship between ETMF Share trading prices and the NAV of the ETMF.

[76] The Exchange states that an ETMF market maker that creates (redeems) a Creation Unit at the end of a trading day to offset its net intraday sales (purchases) of a Creation Unit quantity of ETMF Shares would earn profits to the extent that it either sells (buys) Shares at an aggregate premium (discount) to NAV or buys (sells) a Creation Unit-equivalent quantity of Composition File instruments at an aggregate discount (premium) to their end-of-day values, and the net amount of ETMF premium (discount) plus Composition File instruments discount (premium) exceeds the transaction fee that applies to a creation (redemption) of a Creation Unit of ETMF Shares. Nasdaq further states that this process is simplified for cash creations and redemptions, stating that an ETMF market maker that creates (or redeems) a Creation Unit in cash to offset its net intraday sales (purchases) of a Creation Unit quantity of ETMF Shares would earn profits to the extent that it sells (buys) ETMF Shares in the secondary market at an aggregate premium (discount) to NAV that exceeds the transaction fee that applies to a cash creation (redemption) of a Creation Unit of ETMF Shares.

[77] According to the Exchange, market makers are expected generally to seek to minimize their exposure to price risk in ETMF Shares by holding little or no overnight inventory. The Exchange states that establishing Creation Unit sizes for ETMFs that are somewhat smaller (*i.e.,* in a range of 5,000 to 50,000 Shares) than is customary for ETFs should facilitate tighter market maker inventory management. To the extent that market makers hold small positions in ETMF Shares overnight, they are expected to aggregate such holdings with other risk positions and transact at or near the market close to buy or sell offsetting positions in appropriate, broad-based hedging instruments. Nasdaq states that such hedging of overnight inventory risk on a macro basis does not require disclosure of non-Composition File portfolio positions.

[78] *See supra* notes 76 and 77 and accompanying text.

[79] *See* Precidian Letter at 2, *supra* note 11.

meaningful profits.[80] The Commission believes that competitive forces will provide incentives for market professionals to provide competitive prices to investors and that ETMFs, in this respect, are not any different than other exchange-traded securities.

The opposing commenter also raises a concern that traders who accumulate large ETMF positions will be incentivized to move the NAV in their favor.[81] Eaton Vance responds with its view that the amount of profit a market maker or other trader will earn by trading ETMFs will not be affected by movements in the NAV.[82] Eaton Vance explains that it does not matter whether an ETMF's NAV has moved higher or lower intraday, as no level of NAV provides market makers with more profit than any other NAV.[83] The Commission agrees with Eaton Vance's response with respect to a trader's incentives on an intraday basis because the amount of profit a trader could earn on an intraday basis will not be affected by movements in the NAV. However, traders that hold a large ETMF position overnight or longer could have an incentive to move the NAV in their favor (i.e., to move the NAV up so that they can sell their position at a profit). This, however, is not any different than the incentive a trader would have holding a large position in any exchange-traded security or mutual fund. Under the proposal, Nasdaq Rule 5745(b)(4) requires that Nasdaq implement written surveillance procedures for ETMF Shares. Exchanges routinely conduct surveillance activities to identify manipulative trading activity such as that described by the opposing commenter.[84] And, with an ETMF, a trader would have less ability to influence the ETMF's NAV by trading in the underlying securities because of the lack of daily portfolio disclosure.

Nasdaq Rule 5745(d)(2)(A) requires that the IIV for ETMF Shares be widely disseminated by one or more major market data vendors at intervals of not more than 15 minutes during the Regular Market Session when the ETMF Shares trade on Nasdaq.[85] According to the Exchange, the purpose of IIVs in NAV-Based Trading is to enable investors to estimate the number of ETMF Shares to buy or sell if they want to transact in an approximate dollar amount. For this purpose, Nasdaq believes that dissemination of IIVs at intervals of not more than 15 minutes should generally be sufficient. An ETMF will be permitted to disseminate IIVs at intervals of less than 15 minutes, but will not be required to do so to maintain trading on the Exchange. The Commission agrees that IIV dissemination in intervals of not more than 15 minutes should be sufficient to permit investors to determine the number of ETMF Shares they want to buy or sell associated with an approximate dollar amount.

As noted above, the opposing commenter believes that market professionals will be unable to effectively hedge their ETMF positions due to a stale and possibly inaccurate IIV that is published every 15 minutes.[86] Eaton Vance responds to the opposing commenter by stating that the sole purpose of the IIV is to help investors determine the number of ETMF Shares roughly corresponding to a given dollar amount and that market makers will never have any reason to refer to the IIV in connection with their market making function.[87] In response to the need for market makers to hedge their ETMF positions, Eaton Vance asserts that market makers holding positions in ETMF Shares are not exposed to intraday market risk, and, as such, there would be no need for market makers to hedge their positions intraday.[88] As detailed above, ETMFs will trade intraday at prices based on NAV and, unlike ETFs, ETMFs would not provide pricing signals for market intermediaries or other buyers or sellers of ETMF Shares seeking to estimate the difference between the value of the ETMF's portfolio and the price at which ETMF Shares are currently trading. As such, the Commission believes that a more frequently-disseminated IIV is not necessary for market participants to estimate the value of the ETMF's underlying portfolio for hedging purposes or the management of intraday market risk.

The Commission believes that the proposed listing standards under new Nasdaq Rule 5745 are designed to promote just and equitable principles of trade and to protect investors and the public interest. Under proposed Nasdaq Rule 5745(d)(1)(B), the Exchange will obtain a representation from the issuer of each series of ETMF Shares that the NAV per share for the series will be calculated on each business day that the New York Stock Exchange is open for trading and that the NAV per share will be made available to all market participants at the same time. In addition, under Nasdaq Rule 5745(d)(1)(C), the Reporting Authority (as defined in proposed Nasdaq Rule 5745(c)(4)) [89] must implement and maintain or be subject to procedures designed to prevent the use and dissemination of material, non-public information regarding the ETMF's portfolio positions and changes in the positions.

Under Nasdaq Rule 5745(d)(2)(B)(ii), the Exchange will consider suspension of trading in, or removal from listing of, a series of ETMF Shares if the IIV or the NAV is no longer calculated, or if the IIV, NAV, or Composition File is no longer available to all market participants at the same time. In addition, Nasdaq Rule 5745(d)(2)(C) provides additional circumstances that could result in a trading halt of ETMF Shares on the Exchange. If the IIV of a series of ETMF Shares is not being disseminated as required, Nasdaq may halt trading during the day in which the interruption to the dissemination of the IIV occurs. If the interruption to the dissemination of the IIV persists past the trading day in which it first occurred, Nasdaq will halt trading no later than the beginning of the trading day following the interruption. If Nasdaq becomes aware that the NAV per share with respect to a series of ETMF Shares is not calculated on each business day that the New York Stock Exchange is open for trading and disseminated to all market participants at the same time, it will halt trading in such series until such time as the NAV per share is available to all market participants. In addition, if Nasdaq becomes aware that the Composition File with respect to a series of ETMF Shares is not disseminated to all market participants at the same time, it will halt trading in such series until such time as

[80] *See* Eaton Vance Response Letter at 3, *supra* note 11.

[81] *See* Precidian Letter at 2, *supra* note 11.

[82] *See* Eaton Vance Response Letter at 3, *supra* note 11.

[83] *Id.*

[84] The Commission also notes that the Exchange Act and the rules thereunder prohibit manipulative trading activity. *See e.g.,* 15 U.S.C. 78j(b) and 17 CFR 240.10b–5.

[85] In contrast, Nasdaq Rule 5735 requires the IIV for Managed Fund Shares to be widely disseminated by one or more major market data vendors at least every 15 seconds during the time when the Managed Fund Shares trade on Nasdaq.

[86] *See* Precidian Letter at 5, *supra* note 11.

[87] *See* Eaton Vance Response Letter at 5, *supra* note 11.

[88] *See* Eaton Vance Response Letter at 6, *supra* note 11.

[89] The term ''Reporting Authority'' in respect of a particular series of ETMF Shares means Nasdaq, an institution, or a reporting service designated by Nasdaq as the official source for calculating and reporting information relating to such series of ETMF Shares, including, but not limited to, the IIV, the amount of any cash distribution to holders of ETMF Shares, NAV per share, and the Composition File or other information relating to the issuance, redemption, or trading of ETMF Shares. A series of ETMF Shares may have more than one Reporting Authority, each having different functions. *See* Nasdaq Rule 5745(c)(4).

the Composition File is available to all market participants.[90]

Further, under Nasdaq Rule 5745(g), if the investment adviser to an ETMF issuing ETMF Shares is a registered broker-dealer or is affiliated with a broker-dealer, such investment adviser must erect a ''fire wall'' between the investment adviser and the broker-dealer personnel or broker-dealer affiliate, as applicable, with respect to access to information concerning the composition and/or changes to such ETMF's portfolio holdings. Nasdaq Rule 5745(g) further requires personnel who make decisions on the ETMF's portfolio composition to be subject to procedures designed to prevent the use and dissemination of material, non-public information regarding the applicable ETMF portfolio. Lastly, Nasdaq Rule 5745(b)(4) requires that Nasdaq implement written surveillance procedures for ETMF Shares.

As explained in more detail above, ETMFs will be traded using a novel and unique trading protocol called NAV-Based Trading. Orders to buy and sell ETMFs will be submitted to, and processed by, the Exchange in the customary manner for other exchange-traded securities, with the exception that the price limits for limit orders will be expressed relative to NAV rather than as an absolute dollar price. Further, the execution, reporting, clearance, and settlement of ETMF trades will be substantially the same as for other exchange-traded securities, except that the price of an execution will be expressed relative to NAV rather than as an absolute dollar price until the actual price is determined at the end of the day. Specifically, in NAV-Based Trading, all bids, offers, and execution prices will be expressed as a premium/discount (which may be zero) to the ETMF's next-determined NAV. Trades using NAV-Based Trading will be binding at the time orders are matched on Nasdaq's facilities, with the transaction prices contingent upon the determination of the ETMF's NAV at the end of the business day. All ETMF bids, offers, and trades will be reported intraday in real-time by the Exchange to the Consolidated Tape and separately disseminated to member firms and market data services through a proprietary Nasdaq data feed.

The opposing commenter raises several concerns about the potential for NAV-Based Trading to lead to investor confusion. Specifically, the opposing commenter believes that investors will be confused because they will not be trading at current market prices.[91] In addition, the opposing commenter believes that investors will be confused by the proxy price format.[92] The Commission believes that Nasdaq and Eaton Vance have made a number of representations regarding steps that will be taken to diminish the risk of investor confusion. For example, Nasdaq has committed to providing certain information regarding NAV-Based Trading to Nasdaq's members and other market participants. The Exchange will provide members with a detailed explanation of NAV-Based Trading through a Trading Alert and will inform members of the special characteristics and risks associated with trading ETMF Shares in an information circular—both to be issued prior to the commencement of ETMF trading.[93]

Also with regard to the public availability of ETMF trading information, the Exchange represents that information regarding NAV-Based Trading prices and volumes will be continuously available for ETMFs on a real-time basis throughout each trading day on brokers' computer terminals and through established electronic market data services.[94] Additionally, to avoid investor confusion, the Exchange and organizations offering ETMFs will work with the Exchange's member firms and providers of market data services to ensure that representations of intraday bids, offers, and execution prices consistently follow an ''NAV plus or minus'' display format.[95] Further, the Commission notes that Nasdaq has represented that all ETMFs listed on the Exchange will have a unique identifier associated with their ticker symbols to clearly indicate that the Shares are traded using NAV-Based Trading.

With regard to the public availability of information on ETMFs for investors and other market participants, Eaton Vance represents that it will educate market participants about the features of ETMFs, the potential risks and benefits of investing in ETMFs, the features of NAV-Based Trading, and the distinction between IIV and NAV by posting educational materials on its Web site and by including disclosure in fund prospectuses and marketing literature.[96] Further, Eaton Vance states that it is committed, along with distribution partners among major broker-dealers, registered investment advisors, and other fund sponsors to support and provide the marketplace with the materials, education, and training to ensure a successful ETMF investor experience.[97]

The Commission acknowledges the concerns expressed by the opposing commenter regarding investor understanding of how ETMFs will be priced and how they will trade.[98] As described above, however, the Exchange makes detailed representations regarding the education and information that will be available regarding ETMFs and the manner in which NAV-Based Trading will occur. Given all of the above representations, which are designed to address concerns about investor understanding of the products and how they will trade, the Commission believes that the proposal to allow for the listing and trading of ETMFs is consistent with the protection of investors and the public interest.

The opposing commenter also believes that NAV-Based Trading will cause all brokerage firms, vendors, the Consolidated Tape, and quotation system operators to have to significantly alter their systems.[99] The Commission recognizes that the implementation of NAV-Based Trading will necessitate some system modifications. Eaton Vance states its view, based on its extensive discussions with broker-dealers and providers of market data services, that system modifications to accommodate the introduction of ETMF trading will be modest and can be achieved in a timely manner.[100] Nasdaq represents that the use of a proxy price format to facilitate NAV-Based Trading and to report intraday bids, offers, and trades for ETMFs to the Consolidated Tape will help to minimize the number of system modifications needed.[101] As such, the Commission notes that the Consolidated Tape should not require any changes to accommodate the trading of ETMFs. With respect to customer and brokerage order entry screens, the Commission notes that participating in ETMF trading is voluntary and only broker-dealers and market participants

[90] *See* Nasdaq Rule 5745(d)(2)(C).

[91] *See* Precidian Letter at 2, *supra* note 11.

[92] *See* Precidian Letter at 4–5, *supra* note 11.

[93] *See* Notice, *supra* note 3.

[94] *Id.*

[95] *Id.*

[96] *See* Eaton Vance Letter at 3, *supra* note 8.

[97] *See* Eaton Vance Letter at 4, *supra* note 8.

[98] As noted above, the opposing commenter also stated its belief that ETMFs would likely not provide tax benefits and may cost more to operate than existing ETFs, while other commenters stated their views that ETMFs could offer investors a tax-efficient alternative to mutual funds and lower costs. *See supra* notes 25–30 and accompanying text. Similar to other investment decisions, investors will need to determine whether the tax-efficiency and costs are appropriate for them based on the particular facts and circumstances.

[99] *See* Precidian Letter at 5, *supra* note 11.

[100] *See* Eaton Vance Response Letter at 5, *supra* note 11.

[101] *See* Notice at notes 12–13 and accompanying text, *supra* note 3.

interested in trading ETMF Shares will need to perform any system changes.

The opposing commenter raises a concern that the pricing of ETMF Shares at the end of the day may cause funding problems for investor brokerage accounts and may cause difficulties for broker-dealers in calculating their net capital.[102] While the Commission recognizes that NAV-Based Trading presents certain issues for brokers to address with respect to managing their customer accounts and their net capital, the Commission does not believe that these issues are unique or insurmountable. For example, there are current order types, such as the market-on-close order type, where the final trade price is not determined until the end of the trading day, and broker-dealers have been able to implement procedures to manage their customer accounts and their net capital, despite the lack of an intraday trade price.

Finally, the opposing commenter raises a concern that inclusion of foreign stocks in an ETMF's portfolio will create problems in calculating the ETMF's NAV.[103] The opposing commenter states its view that, if a portfolio includes stocks that trade in different time zones, it may be impossible to accurately set the NAV until the foreign market opens for trading.[104] In response, Eaton Vance states that, comparable to mutual funds that contain foreign securities, ETMFs holding foreign securities would use fair value pricing procedures to determine the NAV.[105] The Commission agrees that ETMFs holding foreign securities would be able to use fair value pricing procedures to determine the NAV. However, the Commission notes that Nasdaq is not, at this time, proposing to list and trade any specific ETMF Shares under its ETMF listing standards and that, as required under proposed Nasdaq Rule 5745(b)(1), the Exchange must file separate proposals under Section 19(b) of the Act to list and trade ETMF Shares on Nasdaq.

The Commission further believes that the corresponding changes to other existing Nasdaq Rules appropriately accommodate the listing and trading of ETMF Shares on the Exchange and provide additional clarity regarding the applicability of Nasdaq Rules and therefore are consistent with the Act.

For the foregoing reasons, the Commission finds that the proposed rule change is consistent with the requirements of the Act and the rule and regulations thereunder applicable to a national securities exchange.

V. Solicitation of Comments

Interested persons are invited to submit written data, views, and arguments concerning the foregoing, including whether Amendment No. 1 to the proposed rule change is consistent with the Act. Comments may be submitted by any of the following methods:

Electronic Comments

- Use the Commission's Internet comment form (*http://www.sec.gov/rules/sro.shtml*); or
- Send an email to *rule-comments@sec.gov. Please include File Number SR–NASDAQ–2014–020 on the subject line.*

Paper Comments

- Send paper comments in triplicate to Brent J. Fields, Secretary, Securities and Exchange Commission, 100 F Street NE., Washington, DC 20549–1090.

All submissions should refer to File Number SR–NASDAQ–2014–020. This file number should be included on the subject line if email is used. To help the Commission process and review your comments more efficiently, please use only one method. The Commission will post all comments on the Commission's Internet Web site (*http://www.sec.gov/rules/sro.shtml*). Copies of the submission, all subsequent amendments, all written statements with respect to the proposed rule change that are filed with the Commission, and all written communications relating to the proposed rule change between the Commission and any person, other than those that may be withheld from the public in accordance with the provisions of 5 U.S.C. 552, will be available for Web site viewing and printing in the Commission's Public Reference Room, 100 F Street NE., Washington, DC 20549, on official business days between the hours of 10:00 a.m. and 3:00 p.m. Copies of the filing also will be available for inspection and copying at the principal office of the Exchange. All comments received will be posted without change; the Commission does not edit personal identifying information from submissions. You should submit only information that you wish to make available publicly. All submissions should refer to File Number SR–NASDAQ–2014–020 and should be submitted on or before December 5, 2014.

VI. Accelerated Approval of Proposed Rule Change, as Modified by Amendment No. 1

As discussed above, the Exchange submitted Amendment No. 1 to confirm that all ETMFs listed on the Exchange will have a unique identifier associated with their ticker symbols and that, in the systems used to transmit and process transactions in ETMF Shares, an ETMF's next-determined NAV will be represented by a proxy price.[106] Previously, the filing stated that Nasdaq expects all ETMFs listed on the Exchange to have a unique identifier associated with their ticker symbols and that Nasdaq expects an ETMF's next-determined NAV to be represented by a proxy price. Additionally, the Exchange removed references to ETMF entry and annual fees as the Exchange intends to address such fees in a separate filing.[107] The Commission believes that Amendment No. 1 provides certainty with respect to the ticker symbol and proxy price aspects of the proposed rule change. The Commission further believes that Amendment No. 1 does not materially affect the substance of the proposed rule change or raise any novel or unique regulatory issues. Accordingly, the Commission finds good cause, pursuant to Section 19(b)(2) of the Act,[108] for approving the proposed rule change, as modified by Amendment No. 1, prior to the 30th day after the date of publication of notice in the **Federal Register**.

VII. Conclusion

It is therefore ordered, pursuant to Section 19(b)(2) of the Act,[109] that the proposed rule change (SR–NASDAQ–2014–020), as modified by Amendment No. 1 thereto, be, and it hereby is, approved on an accelerated basis.

By the Commission.

Kevin M. O'Neill,

Deputy Secretary.

[FR Doc. 2014–26949 Filed 11–13–14; 8:45 am]

BILLING CODE 8011–01–P

[102] *See* Precidian Letter at 3–4, *supra* note 11.

[103] *See* Precidian Letter at 3–4, *supra* note 11.

[104] *See id.* at 3, *supra* note 11.

[105] *See* Eaton Vance Response Letter at 4, *supra* note 11.

[106] *See supra* note 10.

[107] *See id.*

[108] 15 U.S.C. 78s(b)(2).

[109] 15 U.S.C. 78s(b)(2).

SECURITIES AND EXCHANGE COMMISSION

[Release No. 34–73558; File No. SR–NASDAQ–2014–098)]

Self-Regulatory Organizations; The NASDAQ Stock Market LLC; Notice of Filing and Immediate Effectiveness of Proposed Rule Change Relating to Routing

November 7, 2014.

Pursuant to Section 19(b)(1) of the Securities Exchange Act of 1934 (''Act''),[1] and Rule 19b–4 thereunder,[2] notice is hereby given that on October 31, 2014, The NASDAQ Stock Market LLC (''NASDAQ'' or ''Exchange'') filed with the Securities and Exchange Commission (''SEC'' or ''Commission'') the proposed rule change as described in Items I, II, and III below, which Items have been prepared by NASDAQ. The Commission is publishing this notice to solicit comments on the proposed rule change from interested persons.

I. Self-Regulatory Organization's Statement of the Terms of Substance of the Proposed Rule Change

NASDAQ proposes to modify Chapter XV, entitled ''Options Pricing,'' at Section 2 governing pricing for NASDAQ members using the NASDAQ Options Market (''NOM''), NASDAQ's facility for executing and routing standardized equity and index options. Specifically, NOM proposes to amend its Routing Fees.

While the changes proposed herein are effective upon filing, the Exchange has designated that the amendments be operative on November 3, 2014.

The text of the proposed rule change is available on the Exchange's Web site at *http://www.nasdaq.cchwallstreet.com*, at the principal office of the Exchange, and at the Commission's Public Reference Room.

II. Self-Regulatory Organization's Statement of the Purpose of, and Statutory Basis for, the Proposed Rule Change

In its filing with the Commission, the Exchange included statements concerning the purpose of and basis for the proposed rule change and discussed any comments it received on the proposed rule change. The text of these statements may be examined at the places specified in Item IV below. The Exchange has prepared summaries, set forth in sections A, B, and C below, of the most significant aspects of such statements.

A. Self-Regulatory Organization's Statement of the Purpose of, and Statutory Basis for, the Proposed Rule Change

1. Purpose

The purpose of this filing is to amend the Routing Fees in Chapter XV, Section 2(3) to recoup costs incurred by the Exchange to route orders to away markets.

Today, the Exchange assesses a Non-Customer a $0.97 per contract Routing Fee to any options exchange. The Customer[3] Routing Fee for option orders routed to NASDAQ OMX PHLX LLC (''PHLX'') is a $0.12 per contract Fixed Fee in addition to the actual transaction fee assessed. The Customer Routing Fee for option orders routed to NASDAQ OMX BX, Inc. (''BX Options'') is $0.12 per contract. The Customer Routing Fee for option orders routed to all other options exchanges[4] (excluding PHLX and BX Options) is a fixed fee of $0.22 per contract (''Fixed Fee'') in addition to the actual transaction fee assessed. If the away market pays a rebate, the Routing Fee is $0.12 per contract.

With respect to the fixed costs, the Exchange incurs a fee when it utilizes Nasdaq Execution Services LLC (''NES''), a member of the Exchange and the Exchange's affiliated broker-dealer exclusive order router.[5] Each time NES routes an order to an away market, NES is charged a clearing fee[6] and, in the case of certain exchanges, a transaction fee is also charged in certain symbols, which fees are passed through to the Exchange. The Exchange currently recoups clearing and transaction charges incurred by the Exchange as well as certain other costs incurred by the Exchange when routing to away markets, such as administrative and technical costs associated with operating NES, membership fees at away markets, Options Regulatory Fees (''ORFs''), staffing and technical costs associated with routing options. The Exchange assesses the actual away market fee at the time that the order was entered into the Exchange's trading system. This transaction fee is calculated on an order-by-order basis since different away markets charge different amounts.

The Exchange is proposing to increase its Non-Customer Routing Fees from $0.97 to $0.99 per contract to any options exchange. The Exchange is proposing to increase its Customer Routing Fixed Fees to PHLX from $0.12 to $0.13 per contract, in addition to the actual transaction fee assessed to recoup an additional portion of the costs incurred by the Exchange for routing these orders. The Exchange is proposing to increase its Customer Routing Fixed Fees to BX Options from $0.12 to $0.13 per contract. The Exchange is proposing to increase its Customer Routing Fixed Fees to all other options exchanges (excluding PHLX and BX Options) from $0.22 to $0.23 per contract, in addition to actual transaction fees assessed. The Exchange would also increase the Customer Routing Fee to all other options exchanges if the away market pays a rebate from a fee of $0.12 to $0.13 per contract, because the Exchange would continue to retain the rebate to offset the cost to route orders to offset the cost to route orders to these away markets. The Exchange desires to recoup additional costs at this time.

2. Statutory Basis

NASDAQ believes that its proposal to amend its fees is consistent with Section 6(b) of the Act[7] in general, and furthers the objectives of Section 6(b)(4) and (b)(5) of the Act[8] in particular, in that it provides for the equitable allocation of reasonable dues, fees and other charges among members and issuers and other persons using any facility or system which NASDAQ operates or controls, and is not designed to permit unfair discrimination between customers, issuers, brokers, or dealers.

The Exchange believes that amending the Non-Customer Routing Fee for orders routed to any options exchange from a fee of $0.97 to $0.99 per contract, is reasonable because the Exchange desires to recoup an additional portion of the cost it incurs when routing Non-Customer orders. The Exchange is proposing to increase the Fixed Fee to

[1] 15 U.S.C. 78s(b)(1).

[2] 17 CFR 240.19b–4.

[3] The term ''Customer'' or (''C'') applies to any transaction that is identified by a Participant for clearing in the Customer range at The Options Clearing Corporation (''OCC'') which is not for the account of broker or dealer or for the account of a ''Professional'' (as that term is defined in Chapter I, Section 1(a)(48)).

[4] Including BATS Exchange, Inc. (''BATS''), BOX Options Exchange LLC (''BOX''), the Chicago Board Options Exchange, Incorporated (''CBOE''), C2 Options Exchange, Incorporated (''C2''), International Securities Exchange, LLC (''ISE''), the Miami International Securities Exchange, LLC (''MIAX''), NYSE Arca, Inc. (''NYSE Arca''), NYSE MKT LLC (''NYSE Amex'') and ISE Gemini, LLC (''Gemini'').

[5] *See* Securities Exchange Act Release No. 71419 (January 28, 2014), 79 FR 6253 (February 3, 2014) (SR–NASDAQ–2014–007) (an immediately effective rule change to utilize NES for outbound order routing from NOM).

[6] The Options Clearing Corporation (''OCC'') assesses $0.01 per contract side.

[7] 15 U.S.C. 78f(b).

[8] 15 U.S.C. 78f(b)(4), (5).

recoup additional costs that are incurred by the Exchange in connection with routing these orders on behalf of its members.

The Exchange believes that amending the Customer Routing Fee for orders routed to PHLX from a Fixed Fee of $0.12 to $0.13 per contract, in addition to the actual transaction fee, is reasonable because the Exchange desires to recoup an additional portion of the cost it incurs when routing Customer orders to PHLX. Today, the Exchange assesses orders routed to PHLX a lower Fixed Fee for routing Customer orders as compared to the Fixed Fee assessed to other options exchanges. The Exchange is proposing to increase the Fixed Fee to recoup additional costs that are incurred by the Exchange in connection with routing these orders on behalf of its members.

The Exchange believes that amending the Customer Routing Fee for orders routed to BX Options from a Fixed Fee of $0.12 to $0.13 per contract is reasonable because the Exchange desires to recoup an additional portion of the cost it incurs when routing Customer orders to BX Options, similar to the amount of Fixed Fee it proposes to assess for orders routed to PHLX. The Exchange is proposing to assess a Fixed Fee to recoup additional costs that are incurred by the Exchange in connection with routing these orders on behalf of its members. While the Exchange would continue to retain any rebate paid by BX Options,[9] the Exchange does not assess the actual transaction fee that is charged by BX Options for Customer orders.

The Exchange believes that continuing to assess lower Fixed Fees to route Customer orders to PHLX and BX Options, as compared to other options exchanges, is reasonable as the Exchange is able to leverage certain infrastructure to offer those markets lower fees as explained further below.

The Exchange believes that amending the Customer Routing Fee to other away markets, other than PHLX and BX Options, from a Fixed Fee of $0.22 to $0.23 per contract, in addition to the actual transaction fee, is reasonable because the Exchange desires to recoup an additional portion of the cost it incurs when routing orders to these away markets. The Fixed Fee for Customer orders is an approximation of the costs the Exchange will be charged for routing orders to away markets. While each destination market's transaction charge varies and there is a cost incurred by the Exchange when routing orders to away markets, including, OCC clearing costs, administrative and technical costs associated with operating NES, membership fees at away markets, ORFs and technical costs associated with routing options, the Exchange believes that the proposed Routing Fees will enable it to recover the costs it incurs to route Customer orders to away markets.

The Exchange believes that amending the Customer Routing Fee to other away markets, other than PHLX and BX Options, if the away market pays a rebate, from $0.12 to $0.13 per contract is reasonable because the Exchange desires to recoup an additional portion of the cost it incurs when routing Customer orders to away markets, similar to the amount of Fixed Fee it proposes to assess for orders routed to PHLX and BX Options. The Exchange is proposing to assess a Fixed Fee to recoup additional costs that are incurred by the Exchange in connection with routing these orders on behalf of its members. While the Exchange would continue to retain any rebate paid by away markets, the Exchange does not assess the actual transaction fee that is charged by away markets for Customer orders. As a general matter, the Exchange believes that the proposed fees for Customer orders routed to markets which pay a rebate would allow it to recoup and cover a portion of the costs of providing optional routing services for Customer orders because it better approximates the costs incurred by the Exchange for routing such orders.

The Exchange believes that amending the Non-Customer Routing Fee for orders routed to any options exchange from a fee of $0.97 to $0.99 per contract, is equitable and not unfairly discriminatory because the Exchange would assess the same $0.99 per contract fee to all market participants utilizing routing for Non-Customer orders.

The Exchange believes that amending the Customer Routing Fee for orders routed to PHLX from a Fixed Fee of $0.12 to $0.13 per contract, in addition to the actual transaction fee, is equitable and not unfairly discriminatory because the Exchange would assess the same Fixed Fee to all orders routed to PHLX in addition to the transaction fee assessed by that market.

The Exchange believes that increasing the Customer Routing Fee for orders routed to BX Options from a Fixed Fee from $0.12 to $0.13 per contract is equitable and not unfairly discriminatory because the Exchange would uniformly increase the Fixed Fee, similar to PHLX, for all orders routed to BX Options and would continue to uniformly not assess the actual transaction fee, as is the case today.

The Exchange would uniformly assess a $0.13 per contract Fixed Fee to orders routed to NASDAQ OMX exchanges because the Exchange is passing along the saving realized by leveraging NASDAQ OMX's infrastructure and scale to market participants when those orders are routed to PHLX or BX Options and is providing those savings to all market participants. Furthermore, it is important to note that when orders are routed to an away market they are routed based on price first.[10] The Exchange believes that it is equitable and not unfairly discriminatory to assess a fixed cost of $0.13 per contract to route orders to PHLX and BX Options because the cost, in terms of actual cash outlays, to the Exchange to route to those markets is lower. For example, costs related to routing to PHLX and BX Options are lower as compared to other away markets because NES is utilized by all three exchanges to route orders.[11] NES and the three NASDAQ OMX options markets have a common data center and staff that are responsible for the day-to-day operations of NES. Because the three exchanges are in a common data center, Routing Fees are reduced because costly expenses related to, for example, telecommunication lines to obtain connectivity are avoided when routing orders in this instance. The costs related to connectivity to route orders to other NASDAQ OMX exchanges are lower than the costs to route to a non-NASDAQ OMX exchange. When routing orders to non-NASDAQ OMX exchanges, the Exchange incurs costly connectivity charges related to telecommunication lines, membership and access fees, and other related costs when routing orders.

The Exchange believes that amending the Customer Routing Fee to other away markets, other than PHLX and BX Options, from a Fixed Fee of $0.22 to $0.23 per contract is equitable and not unfairly discriminatory because the Exchange would assess the same Fixed Fee to all orders routed to away markets other than PHLX and BX Options in addition to the transaction fee, provided the away market does not pay a rebate.

The Exchange's proposal to increase the Customer Routing Fee to all other options exchanges that pay a rebate, other than PHLX and BX Options, from $0.12 to $0.13 per contract is equitable

[9] BX Options pays a Customer Rebate to Remove Liquidity as follows: Customers are paid $0.35 per contract in All Other Penny Pilot Options (excluding BAC, IWM, QQQ, SPY and VXX) and $0.70 per contract in Non-Penny Pilot Options. *See* BX Options Rules at Chapter XV, Section 2(1).

[10] *See* NASDAQ Rules at Chapter VI, Section 11(e) (Order Routing).

[11] *See* Chapter VI, Section 11 of the BX Options. *See also* PHLX Rule 1080(m)(iii)(A).

and not unfairly discriminatory because the Exchange would assess the same Fixed Fee that is proposed when routing Customer orders to a NASDAQ OMX exchange. All market participants that route an order to an away market, other than PHLX or BX Options, would be assessed a uniform fee of $0.13 per contract if the away market (non-NASDAQ OMX exchange) pays a rebate. These proposals would apply uniformly to all market participants when routing to an away market that pays a rebate, other than PHLX and BX Options.

Finally, market participants may submit orders to the Exchange as ineligible for routing or ''DNR'' to avoid Routing Fees.[12] Also, orders are routed to an away market based on price first.[13]

B. Self-Regulatory Organization's Statement on Burden on Competition

NASDAQ does not believe that the proposed rule change will impose any burden on competition not necessary or appropriate in furtherance of the purposes of the Act. The Exchange does not believe that the proposal creates a burden on intra-market competition because the Exchange is applying the same Routing Fees to all market participants in the same manner dependent on the routing venue, with the exception of Customers. The Exchange will continue to assess separate Customer Routing Fees. Customers will continue to receive the lowest fees as compared to non-Customers when routing orders, as is the case today. Other options exchanges also assess lower Routing Fees for customer orders as compared to non-customer orders.[14]

The Exchange's proposal would allow the Exchange to continue to recoup its costs when routing Customer orders to PHLX or BX Options as well as away markets that pay a rebate when such orders are designated as available for routing by the market participant. The Exchange continues to pass along savings realized by leveraging NASDAQ OMX's infrastructure and scale to market participants when Customer orders are routed to PHLX and BX Options and is providing those savings to all market participants. Today, other options exchanges also assess fixed routing fees to recoup costs incurred by the exchange to route orders to away markets.[15]

Market participants may submit orders to the Exchange as ineligible for routing or ''DNR'' to avoid Routing Fees.[16] It is important to note that when orders are routed to an away market they are routed based on price first.[17]

C. Self-Regulatory Organization's Statement on Comments on the Proposed Rule Change Received From Members, Participants, or Others

No written comments were either solicited or received.

III. Date of Effectiveness of the Proposed Rule Change and Timing for Commission Action

The foregoing rule change has become effective pursuant to Section 19(b)(3)(A)(ii) of the Act.[18] At any time within 60 days of the filing of the proposed rule change, the Commission summarily may temporarily suspend such rule change if it appears to the Commission that such action is necessary or appropriate in the public interest, for the protection of investors, or otherwise in furtherance of the purposes of the Act. If the Commission takes such action, the Commission shall institute proceedings to determine whether the proposed rule should be approved or disapproved.

IV. Solicitation of Comments

Interested persons are invited to submit written data, views, and arguments concerning the foregoing, including whether the proposed rule change is consistent with the Act. Comments may be submitted by any of the following methods:

Electronic Comments

- Use the Commission's Internet comment form (*http://www.sec.gov/rules/sro.shtml);* or
- Send an email to *rule-comments@sec.gov.* Please include File Number SR–NASDAQ–2014–098 on the subject line.

Paper Comments

- Send paper comments in triplicate to Brent J. Fields, Secretary, Securities and Exchange Commission, 100 F Street NE., Washington, DC 20549–1090.

All submissions should refer to File Number *SR–NASDAQ–2014–098.* This file number should be included on the subject line if email is used. To help the Commission process and review your comments more efficiently, please use only one method. The Commission will post all comments on the Commission's Internet Web site (*http://www.sec.gov/rules/sro.shtml).* Copies of the submission, all subsequent amendments, all written statements with respect to the proposed rule change that are filed with the Commission, and all written communications relating to the proposed rule change between the Commission and any person, other than those that may be withheld from the public in accordance with the provisions of 5 U.S.C. 552, will be available for Web site viewing and printing in the Commission's Public Reference Room, 100 F Street NE., Washington, DC 20549, on official business days between the hours of 10:00 a.m. and 3:00 p.m. Copies of the filing also will be available for inspection and copying at the principal office of the Exchange. All comments received will be posted without change; the Commission does not edit personal identifying information from submissions. You should submit only information that you wish to make available publicly. All submissions should refer to File Number *SR–NASDAQ–2014–098* and should be submitted on or before December 5, 2014.

For the Commission, by the Division of Trading and Markets, pursuant to delegated authority.[19]

Kevin M. O'Neill,

Deputy Secretary.

[FR Doc. 2014–26946 Filed 11–13–14; 8:45 am]

BILLING CODE 8011–01–P

[12] *See* NASDAQ Rules at Chapter VI, Section 11(e) (Order Routing).

[13] *See* Chapter VI, Section 11 of the BX Options and NOM Rules.

[14] BATS assesses lower customer routing fees as compared to non-customer routing fees per the away market. For example BATS assesses ISE customer routing fees of $0.52 per contract and an ISE non-customer routing fee of $0.65 per contract. *See* BATS BZX Exchange Fee Schedule.

[15] *See* CBOE's Fees Schedule and ISE's Fee Schedule.

[16] *See* note 12.

[17] *See* note 13.

[18] 15 U.S.C. 78s(b)(3)(A)(ii).

[19] 17 CFR 200.30–3(a)(12).

SECURITIES AND EXCHANGE COMMISSION

[Release No. 34–73557; File No. SR–NYSEArca–2014–131]

Self-Regulatory Organizations; NYSE Arca, Inc.; Notice of Filing of Proposed Rule Change Amending the NYSE Arca Options Fee Schedule Relating to Qualified Contingent Cross (''QCC'') Transactions Fees, Effective November 1, 2014

November 7, 2014.

Pursuant to Section 19(b)(1) of the Securities Exchange Act of 1934 (the ''Act''),[1] and Rule 19b–4 thereunder,[2] notice is hereby given that on October 31, 2014, NYSE Arca, Inc. (the ''Exchange'' or ''NYSE Arca'') filed with the Securities and Exchange Commission (the ''Commission'') a

[1] 15 U.S.C. 78s(b)(1).

[2] 17 CFR 240.19b–4.

proposed rule change as described in Items I, II and III below, which Items have been prepared by the Exchange. The Commission is publishing this notice to solicit comments on the proposed rule change from interested persons.

I. Self-Regulatory Organization's Statement of the Terms of Substance of the Proposed Rule Change

The Exchange proposes to amend the NYSE Arca Options Fee Schedule relating to Qualified Contingent Cross transaction fees, effective November 1, 2014. The text of the proposed rule change is available on the Exchange's Web site at *www.nyse.com,* at the principal office of the Exchange, and at the Commission's Public Reference Room.

II. Self-Regulatory Organization's Statement of the Purpose of, and Statutory Basis for, the Proposed Rule Change

In its filing with the Commission, the self-regulatory organization included statements concerning the purpose of, and basis for, the proposed rule change and discussed any comments it received on the proposed rule change. The text of those statements may be examined at the places specified in Item IV below. The Exchange has prepared summaries, set forth in sections A, B, and C below, of the most significant parts of such statements.

A. Self-Regulatory Organization's Statement of the Purpose of, and the Statutory Basis for, the Proposed Rule Change

1. Purpose

The purpose of this filing is to modify the Exchange's fees for QCC transactions. The Exchange proposes to implement the fee changes on November 1, 2014.

Currently, the Exchange charges $0.10 per contract side for QCC transactions, regardless of whether a Customer is part of the transaction. The Exchange proposes to adopt a differentiated fee schedule and to instead charge $0.00 per contract side for Customers and $0.20 per contract side for non-Customers.

As is the case today, the Exchange would continue to offer a Floor Broker rebate of $0.035 per contract side for executed QCC orders, but proposes to introduce one exception: there would be no Floor Broker rebate for executions of QCC orders where there are Customers on both sides of the transaction. For example, a QCC transaction where a Customer buying 1,000 ABC Dec 40 Calls trades with a different Customer selling 1,000 ABC Dec 40 Calls would be ineligible for the Floor Broker rebate. However, a QCC transaction with a Customer on only one side, executed by a Floor Broker, would continue to receive the rebate.

The Exchange believes that restructuring the QCC fees as proposed would allow OTP Holders and OTP Firms to compete on a more equal footing with other exchanges offering similar QCC fees.

The Exchange is also proposing a non-substantive, formatting change to the section of the fee schedule that applies to QCC transactions. The Exchange is proposing to re-format the ''QUALIFIED CONTINGENT CROSS TRANSACTION FEES'' section of the Fee Schedule as a table with distinct rows and columns to make the Fee Schedule easier for participants to navigate.

2. Statutory Basis

The Exchange believes that the proposed rule change is consistent with Section 6(b) of the Act,[3] in general, and furthers the objectives of Sections 6(b)(4) and (5) of the Act,[4] in particular, because it provides for the equitable allocation of reasonable dues, fees, and other charges among its members, issuers and other persons using its facilities and does not unfairly discriminate between customers, issuers, brokers or dealers.

The Exchange believes that the proposed rates are reasonable, equitable and not unfairly discriminatory as they are consistent with those charged by other markets.[5] The Exchange believes that proposed rates are likewise not unreasonable, inequitable or unfairly discriminatory because the same fee would be charged to all non-Customers alike. It is also not unreasonable, inequitable or unfairly discriminatory to impose no charge on Customers for QCC transactions because this change would enable non-Customers to better compete for (and, thus, to better attract) Customer business.

In addition, the Exchange believes that it is not unreasonable, inequitable or unreasonably discriminatory to exempt from the Floor Broker rebate those QCC transactions where there are Customers on both sides of the transaction. A rebate is the refunding of a portion of an assessed fee; however, when there are Customers on both sides of a QCC transaction, the Exchange is not assessing any fees. Accordingly, the Exchange believes that not offering a rebate for QCC transactions on which a fee that [sic] was never assessed in the first instance, cannot be viewed as unreasonable, inequitable or unreasonably discriminatory.

For these reasons, the Exchange believes that the proposal is consistent with the Act.

B. Self-Regulatory Organization's Statement on Burden on Competition

In accordance with Section 6(b)(8) of the Act,[6] the Exchange does not believe that the proposed rule change will impose any burden on competition that is not necessary or appropriate in furtherance of the purposes of the Act. The Exchange believes the proposed fee change is reasonably designed to be fair and equitable, and therefore, will not unduly burden any particular group of market participants trading on the Exchange vis-à-vis another group. The Exchange believes the proposed change to offer QCC transactions to Customers free of charge may enhance the competitive position of Non-Customers and allow OTP Holders and OTP Firms to compete more effectively for Customer QCC orders. In addition, the Exchange believes that the proposed changes will enhance the competiveness of the Exchange relative to other exchanges which offer comparable differentiated fees for QCC transactions.[7]

The Exchange notes that it operates in a highly competitive market in which market participants can readily favor competing venues. In such an environment, the Exchange must continually review, and consider adjusting, its fees and credits to remain competitive with other exchanges. For the reasons described above, the Exchange believes that the proposed fee change reflects this competitive environment.

C. Self-Regulatory Organization's Statement on Comments on the Proposed Rule Change Received From Members, Participants, or Others

No written comments were solicited or received with respect to the proposed rule change.

III. Date of Effectiveness of the Proposed Rule Change and Timing for Commission Action

The foregoing rule change is effective upon filing pursuant to Section 19(b)(3)(A)[8] of the Act and

[3] 15 U.S.C. 78f(b).

[4] 15 U.S.C. 78f(b)(4) and (5).

[5] *See e.g.,* NASDAQ OMX LLC [sic] Pricing Schedule, *available here, http://www.nasdaqtrader.com/Micro.aspx?id=PHLXPricing.*

[6] 15 U.S.C. 78f(b)(8).

[7] *See supra* n. 5.

[8] 15 U.S.C. 78s(b)(3)(A).

subparagraph (f)(2) of Rule 19b–4 [9] thereunder, because it establishes a due, fee, or other charge imposed by the Exchange.

At any time within 60 days of the filing of such proposed rule change, the Commission summarily may temporarily suspend such rule change if it appears to the Commission that such action is necessary or appropriate in the public interest, for the protection of investors, or otherwise in furtherance of the purposes of the Act. If the Commission takes such action, the Commission shall institute proceedings under Section 19(b)(2)(B) [10] of the Act to determine whether the proposed rule change should be approved or disapproved.

IV. Solicitation of Comments

Interested persons are invited to submit written data, views, and arguments concerning the foregoing, including whether the proposed rule change is consistent with the Act. Comments may be submitted by any of the following methods:

Electronic Comments

- Use the Commission's Internet comment form (*http://www.sec.gov/rules/sro.shtml*); or
- Send an email to *rule-comments@sec.gov.* Please include File Number SR–NYSEArca–2014–131 on the subject line.

Paper Comments

- Send paper comments in triplicate to Secretary, Securities and Exchange Commission, 100 F Street NE., Washington, DC 20549–1090.

All submissions should refer to File Number SR–NYSEArca–2014–131. This file number should be included on the subject line if email is used. To help the Commission process and review your comments more efficiently, please use only one method. The Commission will post all comments on the Commission's Internet Web site (*http://www.sec.gov/rules/sro.shtml*). Copies of the submission, all subsequent amendments, all written statements with respect to the proposed rule change that are filed with the Commission, and all written communications relating to the proposed rule change between the Commission and any person, other than those that may be withheld from the public in accordance with the provisions of 5 U.S.C. 552, will be available for Web site viewing and printing in the Commission's Public Reference Room, 100 F Street NE., Washington, DC 20549 on official business days between the hours of 10:00 a.m. and 3:00 p.m. Copies of such filing also will be available for inspection and copying at the principal offices of the Exchange. All comments received will be posted without change; the Commission does not edit personal identifying information from submissions. You should submit only information that you wish to make available publicly. All submissions should refer to File Number SR–NYSEArca–2014–131, and should be submitted on or before December 5, 2014.

For the Commission, by the Division of Trading and Markets, pursuant to delegated authority.[11]

Kevin M. O'Neill,

Deputy Secretary.

[FR Doc. 2014–26945 Filed 11–13–14; 8:45 am]

BILLING CODE 8011–01–P

[9] 17 CFR 240.19b–4(f)(2).

[10] 15 U.S.C. 78s(b)(2)(B).

[11] 17 CFR 200.30–3(a)(12).

SECURITIES AND EXCHANGE COMMISSION

[Release No. 34–73559; File No. SR–BATS–2014–018)

Self-Regulatory Organizations; BATS Exchange, Inc.; Order Disapproving a Proposed Rule Change To Adopt Rule 14.11(k) to List Managed Portfolio Shares and to List and Trade Shares of Certain Funds of the Spruce ETF Trust

November 7, 2014

On August 4, 2014, BATS Exchange, Inc. (''Exchange'' or ''BATS'') filed with the Securities and Exchange Commission (''Commission''), pursuant to Section 19(b)(1) of the Securities Exchange Act of 1934 (''Exchange Act'') [1] and Rule 19b–4 thereunder,[2] a proposed rule change to adopt new BATS Rule 14.11(k), which would permit the Exchange to list Managed Portfolio Shares, which are shares of actively managed exchange-traded funds (''ETFs'') for which the portfolio is disclosed quarterly, and to list and trade shares of certain funds of the Spruce ETF Trust (''Trust'') [3] under proposed BATS Rule 14.11(k). The proposed rule change was published for comment in the **Federal Register** on August 13, 2014.[4] The Commission received one comment letter on the proposal.[5] On September 24, 2014, pursuant to Section 19(b)(2) of the Exchange Act,[6] the Commission designated a longer period within which to approve the proposed rule change, disapprove the proposed rule change, or institute proceedings to determine whether to disapprove the proposed rule change.[7]

This Order disapproves the proposed rule change.

I. Description of the Proposal

The Exchange proposes to: (1) Add new BATS Rule 14.11(k) which would permit the listing of Managed Portfolio Shares; and (2) list and trade shares (''Shares'') of the following funds (each a ''Fund'' and, collectively, the ''Funds'') under the proposed rule: Large Cap Fund, Large Cap Value Fund, Large Cap Growth Fund, Large/Mid Cap Fund, Large/Mid Cap Value Fund, Large/Mid Cap Growth Fund, Large Cap Long-Short Fund, Large Cap Value Long-Short Fund, Large Cap Growth Long-Short Fund, Large/Mid Cap Long-Short Fund, and Large/Mid Cap Value Long-Short Fund, Large/Mid Cap Growth Long-Short Fund, and Large Cap Growth Active Insights Fund. The discussion below summarizes the Exchange's proposal, details of which are described in the Notice.[8]

A. Proposed Listing Rules

The Exchange's proposal would define the term ''Managed Portfolio Share'' as a security that (a) is issued by an investment company (''Investment Company'') organized as an open-end management investment company or similar entity, that invests in a portfolio of securities selected by the Investment Company's investment adviser consistent with the Investment Company's investment objectives and policies; (b) is issued in a predetermined Creation Unit [9] size in

[1] 15 U.S.C. 78s(b)(1).

[2] 17 CFR 240.19b–4.

[3] The Commission notes that the Trust, which would be the issuer of the funds, filed an Application for an Order under Section 6(c) of the Investment Company Act of 1940 (''1940 Act'') and rules thereunder (File No. 812–13953), dated September 1, 2011 (''Exemptive Application''). The Commission published notice of this application (''Notice of an Application for Exemptive Relief'') on October 21, 2014. *See* Investment Company Act Release No. 31301 (Oct. 21, 2014), 79 FR 63964 (Oct. 27, 2014).

[4] *See* Securities Exchange Act Release No. 72787 (Aug. 7, 2014), 79 FR 47488 (''Notice'').

[5] See Letter from Gary L. Gastineau, President, ETF Consultants.com, Inc., to Elizabeth M. Murphy, Secretary, Commission, dated Aug. 30, 2014 (''Comment Letter'').

[6] 15 U.S.C. 78s(b)(2).

[7] *See* Securities Exchange Act Release No. 73199, 79 FR 58844 (September 30, 2014). The Commission designated November 11, 2014 as the date by which it should approve, disapprove, or institute proceedings to determine whether to disapprove the proposed rule change.

[8] *See* Notice, *supra* note 4.

[9] Under the proposal, a ''Creation Unit'' is a specified minimum number of Managed Portfolio

Continued

exchange for a cash amount equal to the next determined Net Asset Value (''NAV''),[10] (c) pursuant to the ''Small Allotment Redemption Option,'' may be redeemed for cash by any Beneficial Owner[11] in any size less than a Redemption Unit[12] for a cash amount equal to the next determined NAV for at least 15 calendar days, in the event that for 10 consecutive Business Days, or such shorter period as determined by the issuer, the midpoint of the national best bid and offer at the time of the calculation of the NAV (the ''Bid/Ask Price''),[13] for the security has a discount of 5% or greater from the NAV; and (d) when aggregated in a number of shares equal to a Redemption Unit, or multiples thereof, may be redeemed at an Authorized Participant's[14] request, which each Authorized Participant would be paid through a blind trust established for its benefit a portfolio of securities and/or cash with a value equal to the next determined NAV.

Funds issuing Managed Portfolio Shares would be actively-managed, and in that respect would be similar to Managed Fund Shares, which are actively-managed funds listed and traded under BATS Rule 14.11(i). Managed Portfolio Shares, however, would differ from Managed Fund Shares in the following important respects. First, in contrast to Managed Fund Shares, for which a ''Disclosed Portfolio'' is required to be disseminated at least once daily,[15] the portfolio for an issue of Managed Portfolio Shares would be disclosed at least quarterly in accordance with normal disclosure requirements otherwise applicable to open-end investment companies registered under the 1940 Act.[16] Second, creations of Managed Portfolio Shares would generally be effected through a delivery of only cash, whereas creations of Managed Fund Shares are generally effected through an in-kind delivery of securities and cash. Third, in connection with the redemption of shares in Redemption Unit size, the in-kind delivery of any portfolio securities would generally be effected through a blind trust for the benefit of the redeeming Authorized Participant, and the blind trust would liquidate the portfolio securities pursuant to instructions from the Authorized Participant without disclosing the identity of those securities to the Authorized Participant. Fourth, pursuant to the Small Allotment Redemption Option, Beneficial Owners would be able to redeem shares for cash directly from a fund in any size less than a Redemption Unit at the fund's NAV in limited circumstances.

For each series of Managed Portfolio Shares, an estimated value, defined in the proposed rule as the ''Intraday Indicative Value'' (''IIV''), that reflects an estimated intraday value of a fund's portfolio would be disseminated. The IIV would be based upon all of a fund's holdings as of the close of the prior business day and would be widely disseminated by one or more major market data vendors at least every 15 seconds during the Exchange's Regular Trading Hours (normally, 9:30 a.m. to 4:00 p.m., Eastern Time).

The Exchange's proposal provides that the Exchange would file separate proposals under Section 19(b) of the Exchange Act before listing and trading any series of Managed Portfolio Shares.

B. Description of the Funds

BlackRock Fund Advisors would be the investment adviser (''Adviser'') to the Funds.[17] State Street Bank and Trust Company would be the administrator, custodian, and transfer agent for the Trust (''Custodian'' or ''Transfer Agent''). BlackRock Investments, LLC (''Distributor'') would serve as the distributor for the Trust.

Under normal circumstances,[18] each Fund would invest at least 80% of its net assets in a portfolio of long positions (or engage in borrowings for the purpose of establishing short positions for the Long-Short Funds) in U.S. equity securities.[19] The Funds may in some instances also invest in non-U.S. equity securities with similar market capitalization, liquidity, and risk-return profiles to the U.S. equity securities eligible for investment. Each Fund would hold equity securities of at least 13 non-affiliated issuers, primarily from the 1,200 largest U.S. stocks by market capitalization as determined by The Frank Russell Company annually. Generally, the Large/Mid Cap Funds would select securities from a universe of approximately the 1,200 largest equity securities traded on U.S. exchanges and the Large Cap Funds would select securities from a universe of approximately the 1,000 largest equity securities traded on U.S. exchanges.

A Fund may, to a limited extent (under normal circumstances, less than 20% of the Fund's net assets), engage in transactions in futures contracts, forward contracts, options, and swaps.[20] A Fund may also invest a portion of its assets in high-quality money market instruments.

II. Summary of the Comment Letter

The Commission received one letter opposing the proposed rule change, which raises several concerns.[21] First,

Shares that an Authorized Participant may purchase from the issuer for the current net asset value.

[10] Depending on the context, the term ''NAV'' may refer to the NAV per Share, the NAV per Creation Unit, or the NAV of a fund.

[11] Under the proposal, a ''Beneficial Owner'' is defined as: (1) A natural person; (2) a trust established for the benefit of a natural person or a group of related family members; or (3) a tax deferred retirement plan where investments are selected by a natural person purchasing for its own account.

[12] Under the proposal, a ''Redemption Unit'' is a specified number of Managed Portfolio Shares that an Authorized Participant may sell to the issuer for the current NAV and which is also used for determining whether a Beneficial Owner may redeem for cash. *See infra* note 14.

[13] The records relating to Bid/Ask Prices would be retained by the Funds and its service providers.

[14] Certain large market participants, typically broker-dealers, can become ''Authorized Participants'' with respect to the Funds. Each Authorized Participant would enter into a contractual relationship with a Fund or Funds, allowing it to engage in redemptions of Shares directly with the issuer.

[15] BATS Rule 14.11(i)(3)(B) defines the term ''Disclosed Portfolio'' as the identities and quantities of the securities and other assets held by the Investment Company that will form the basis for the Investment Company's calculation of NAV at the end of the business day. BATS Rule 14.11(i)(4)(B)(ii)(a) requires that the Disclosed Portfolio be disseminated at least once daily and that it be made available to all market participants at the same time.

[16] A mutual fund is required to file with the Commission its complete portfolio schedules for the second and fourth fiscal quarters on Form N–SAR under the 1940 Act, and is required to file its complete portfolio schedules for the first and third fiscal quarters on Form N–Q under the 1940 Act, within 60 days of the end of the quarter. Form N–Q requires funds to file the same schedules of investments that are required in annual and semi-annual reports to shareholders. These forms are available to the public on the Commission's Web site at *www.sec.gov.*

[17] BlackRock Fund Advisors is an indirect wholly owned subsidiary of BlackRock, Inc.

[18] The term ''under normal circumstances'' includes, but is not limited to, the absence of adverse market, economic, political, or other conditions, including extreme volatility or trading halts in the equity markets or the financial markets generally; operational issues causing dissemination of inaccurate market information; or force majeure type events such as systems failure, natural or man-made disaster, act of God, armed conflict, act of terrorism, riot, or labor disruption, or any similar intervening circumstance.

[19] Equity securities would include common stock, preferred stock, securities convertible into common stock and securities or other instruments whose price is linked to the value of common stock, which includes, but is not limited to, shares of other investment companies.

[20] Derivatives would include the following: treasury futures, equity index futures, currency futures, currency forwards, interest rate swaps, credit default swaps, total return swaps, equity index options, and single stock equity options. The derivatives, excluding currency forwards, would be exchange traded and/or centrally cleared. Each Fund's use of derivatives may be used to enhance leverage, but such leverage would never exceed 1/3 of a Fund's total assets.

[21] *See supra* note 5. The commenter notes that he has a retained economic interest in a product that may be competitive with Managed Portfolio Shares,

the commenter asserts that there is a ''significant risk'' that the Internal Revenue Service (''IRS'') would deny the purported tax benefits of the Funds' distinctive in-kind redemption program.[22] Therefore, the commenter recommends that approval of the proposal be conditioned on the issuer obtaining a favorable IRS determination of the tax treatment through a Private Letter Ruling.[23]

In addition, the commenter predicts that, compared to most existing ETFs, the Shares would probably trade with significantly wider bid-ask spreads, with more variable premiums and discounts, or with both, because of what the commenter characterizes as the unreliability of the Funds' proposed method for ensuring secondary market trading efficiency. The commenter states that the Funds' market makers would have only indirect, and likely imperfect, information about Fund holdings.[24] The commenter argues that effectively arbitraging the Funds would be significantly more difficult than the arbitrage for most existing foreign ETFs.[25] The commenter also argues that there is no support for the Exchange's contention that existing ETFs holding portfolios of foreign securities, such as index-based ETFs holding Asian stocks, have demonstrated efficient pricing characteristics even though, because foreign stocks do not trade during the same hours as U.S. ETFs, the ETFs holding foreign stocks do not provide opportunities for riskless arbitrage transactions during much of the trading day.[26] The commenter also cites a draft academic working paper [27] for the propositions that market trading efficiency varies significantly by type and size of ETF; that funds with high share trading volumes, liquid underlying holdings, and efficient arbitrage mechanisms trade with relatively tight bid-ask spreads and more stable premiums and discounts; and that funds lacking these characteristics generally traded with wider spreads and more variable premiums and discounts.[28]

The commenter also states its view that, for a number of reasons, the dissemination of an IIV by the Funds would likely prove ineffective in ensuring alignment of secondary market prices for the Shares with the values of the underlying portfolios. The commenter asserts that, during periods of rapid market movement, the use of last-sale prices to calculate an IIV, coupled with the dissemination of the IIV only every 15 seconds, would mean that the IIV would be a lagging indicator of actual portfolio values.[29] Additionally, the commenter asserts that the IIV may reflect clearly erroneous values for securities that have not yet opened for trading on a particular business day or that are subject to an intraday interruption in trading.[30] The commenter also states that no one would stand behind a Fund's IIV to ensure timeliness and accuracy.[31] The commenter predicts that, without a reliable IIV, the Shares cannot and would not trade acceptably in the secondary market.[32]

The commenter predicts that frequent IIV errors would in turn cause ''erroneous share trades'' to be executed.[33] The commenter states that the proposal does not address the treatment of erroneous share trades resulting from a faulty IIV—namely, whether IIV errors and related erroneous trades would be detected by the Exchange, whether such trades would be cancelled, and whether the Exchange would apply a materiality standard for cancellations.[34] The commenter argues that, as a condition of approval, the Exchange should be required to monitor the timeliness and accuracy of IIV dissemination and to implement procedures to address trades when an erroneous IIV has been disseminated.[35]

The commenter also predicts that the following elements of the proposed redemption arrangements would introduce additional costs and uncertainties for Authorized Participants:

- The Custodian would have a monopoly position as the sole eligible provider of trustee services for the blind trust;
- The Adviser, rather than the Authorized Participant, would negotiate the fees paid to the trustee;
- In contrast to existing ETFs, no Authorized Participant would have the potential ability to use its market knowledge and market position to enhance arbitrage profits (or offset arbitrage costs) by managing sales of the distributed securities to minimize market impact or to realize prices above the market close; and
- The Custodian, who stands in for the Authorized Participant in the sale of distributed securities, would have no apparent incentive to sell distributed securities with low market impact or at prices above the close and would experience little or no downside from doing the opposite.[36]

The commenter also asserts that redeeming Authorized Participants would be exposed to potential costs and risks associated with not being able to control disposition of significantly more concentrated redemption proceeds, and the commenter argues that these extra costs and risks associated with the blind trust arrangement would be passed through to shareholders transacting in the secondary market, reflected as wider bid-ask spreads, more volatile premiums and discounts for the Shares, or both.[37]

The commenter posits that the lack of portfolio transparency would favor market makers and other professional traders over other market participants, such as investors.[38] Notwithstanding the public dissemination of the IIV, the commenter argues that market makers and other professional traders would have a significant indirect information advantage over other participants because of their ability to glean information about a Fund's holdings through sophisticated data analysis of changes in the IIV.[39] In particular, the commenter asserts that IIV disclosures might enable market makers and professional traders to uncover a Fund's holdings and trading activity, rendering the Fund susceptible to the dilutive effects of front running.[40] The commenter asserts that, prior to approval, the proposal should be amended to include: (1) A discussion of the steps to be taken to minimize reverse engineering risk; (2) a discussion of how the Funds propose to resolve the conflict between providing market makers with adequate information to support efficient Share trading and protecting against reverse engineering; and (3) representations that the Funds would adequately disclose reverse-engineering risk and the conflicts the

and states that his views on the Exchange's filing ''may be considered subject to a conflict of interest.'' Comment Letter, *supra* note 5, at 1, n.1. He states that his comments are made in the public interest and to the best of his ability are not influenced by any conflict. *See id.*

[22] *See id.* at 4.

[23] *See id.*

[24] *See id.* at 7.

[25] *See id.*

[26] *See id.* at 9.

[27] ''Inefficiencies in the Pricing of Exchange-Traded Funds,'' Antti Petajisto, September 20, 2013, available at *http://www.petajisto.net/.*

[28] *See* Comment Letter, *supra* note 5, at 8.

[29] *See id.* at 9.

[30] *See id.* at 9–10.

[31] *See id.* at 10.

[32] *See id.*

[33] *See id.* at 12.

[34] *See id.*

[35] *See id.*

[36] *See id.* at 11.

[37] *See id.*

[38] *See id.* at 13.

[39] *See id.* at 13–14.

[40] *See id.* The commenter discusses certain factors determining a fund's susceptibility to reverse engineering using intraday valuations disseminated at 15 second intervals. *See id.* at 14.

Funds face in seeking to provide for efficient market trading and protection against reverse engineering.[41]

The commenter argues that the Commission should not grant the issuer's pending request for exemptive relief under the 1940 Act to maintain early Order Cut-Off Times for Fund redemptions, which are intended to facilitate the timely sale of distributed securities by the blind trusts that receive the proceeds of Authorized Participant redemptions and the efficient processing of redemptions by retail investors through the Small Allotment Redemption Option.[42] The commenter questions how the early Order Cut-Off Times would impact secondary market trading and the Funds' proposed arbitrage mechanism.[43]

The commenter posits that a principal purpose of including the Small Allotment Redemption Option in the proposal is to provide comfort to the Commission and market participants that investors would be able to redeem Shares with the Fund at or near NAV whenever secondary market trading prices are at a significant discount to NAV.[44] The commenter argues that these provisions, as proposed, are inadequate for this purpose because: (1) Shares could trade at persistently wide discounts to NAV and still rarely, if ever, cause the Small Allotment Redemption Option to be invoked due to the triggering events thresholds; (2) the Small Allotment Redemption Option would be available only to a limited set of shareholders and would be restricted to redemptions of less than a Redemption Unit; (3) the expected early Order Cut-Off Time for redemptions under the Small Allotment Redemption Option means that an investor's ability to directly redeem Shares for cash would exist for only a portion of each business day; and (4) investors who redeem Shares would be subject to transaction fees imposed by the Fund of up to 2% and may also be subject to broker-dealer processing fees.[45] The commenter recommends that the Commission impose the following conditions for approval: (1) Modification of the triggering events;[46] (2) extension of eligibility for the Small Allotment Redemption Option to all shareholders and establishment (and disclosure) of a reasonable upper limit on the value of Shares that are eligible; (3) establishing the close of the Exchange's Regular Trading Hours as the Order Cut-off Time for redemptions under the Small Allotment Redemption Option; and (4) establishment of a cap on transaction fees that the Funds may charge on direct redemptions of Shares.[47]

The commenter believes that the Funds would be permitted to hold investments that are not well-suited to the continuous dissemination of timely and accurate IIVs throughout the trading day.[48] The commenter asserts that the Funds should: (1) Be required to limit their non-cash investments to U.S.-exchange-listed stocks with market caps of $5 billion or greater (consistent with the general understanding of large- and medium-cap stocks; a universe of about 700 stocks currently); (2) not be permitted to invest in illiquid assets; and (3) not be permitted to employ investment leverage or hold short positions.[49]

The commenter notes that the Exchange would permit trading in the Shares between 8:00 a.m. and 5:00 p.m., but that the IIV would only be disseminated during the Exchange's Regular Trading Hours, which are between 9:30 a.m. and 4:00 p.m. The commenter asserts that the proposal does not adequately address the significant risk that the prices of Shares bought or sold in the Pre-Opening Session (8:00 a.m. to 9:30 a.m.) and After Hours Session (4:00 p.m. to 5:00 p.m.) would vary widely from underlying portfolio values because an updated IIVs would not be available.[50] Therefore, the commenter suggests that trading in Shares should be limited to the Exchange's Regular Trading Hours.[51]

The commenter states that, given the importance of the IIV to the decision-making process of current and prospective Fund investors, all Fund investors should have ongoing access to current IIV values.[52] The commenter suggests that each Fund's current IIV be provided at no charge on a public Web site and made available to the public no later than it is made available to any other market participant.[53] The commenter also suggests that the following information be published on the Funds' Web site: real time IIVs and historical IIV information; statistics regarding closing price premiums and discounts; statistics regarding intraday estimated premiums and discounts; statistics regarding bid-ask spreads; statistics regarding long or short equity market exposure and the amount of investment leverage employed; and statistics regarding transaction fees applicable to purchases of Shares, redemptions through the Small Allotment Redemption Option and Redemption Unit redemptions by Authorized Participants.[54]

III. Discussion and Commission Findings

Under Section 19(b)(2)(C) of the Exchange Act, the Commission shall approve a proposed rule change of a self-regulatory organization if the Commission finds that the proposed rule change is consistent with the requirements of the Exchange Act and the rules and regulations thereunder that are applicable to that organization.[55] The Commission shall disapprove a proposed rule change if it does not make such a finding.[56]

After careful consideration, the Commission does not find that the proposed rule change is consistent with the requirements of the Exchange Act and the rules and regulations thereunder applicable to a national securities exchange. In particular, the Commission does not find that the proposed rule change is consistent with Section 6(b)(5) of the Exchange Act, which requires that the rules of a national securities exchange be designed, among other things, to prevent fraudulent and manipulative acts and practices, to promote just and equitable principles of trade, to remove impediments to and perfect the mechanism of a free and open market and a national market system, and to protect investors and the public interest.[57]

Before an ETF can list and trade on a national securities exchange, the ETF must have exemptive relief under the 1940 Act, and a national securities exchange must have effective rules in place to list and trade the ETF.[58] As noted above, the Trust has filed an Exemptive Application under the 1940

[41] *See id.* at 14.

[42] *See id.* at 15.

[43] *See id.*

[44] *See id.* at 15–16.

[45] *See id.* at 16.

[46] *See id.* at 17.

[47] *See id.* at 20.

[48] *See id.*

[49] *See id.* at 21.

[50] *See id.*

[51] *See id.*

[52] *See id.*

[53] *See id.* at 21–22.

[54] *See id.* at 22–23.

[55] 15 U.S.C. 78s(b)(2)(C)(i).

[56] 15 U.S.C. 78s(b)(2)(C)(ii).

[57] 15 U.S.C. 78f(b)(5). In disapproving the proposed rule change, the Commission has considered the proposed rule's impact on efficiency, competition, and capital formation. 15 U.S.C. 78c(f).

[58] Neither an ETF that has obtained 1940 Act exemptive relief but does not fall within Commission-approved exchange listing standards, nor an ETF that falls within Commission-approved listing standards but has been denied 1940 Act exemptive relief, can legally be listed and traded on a national securities exchange.

Act.[59] As stated in the Notice of an Application for Exemptive Relief, however, ''the Commission preliminarily believes that [the Trust's] proposed ETFs do not meet the standard for exemptive relief under section 6(c) of the [1940] Act,'' [60] and accordingly, ''absent a request for a hearing that is granted by the Commission, the Commission intends to deny [the Trust's] request for an exemption under section 6(c) of the [1940] Act as not necessary or appropriate in the public interest and as not consistent with the protection of investors and the purposes fairly intended by the policy and provisions of the [1940] Act.'' [61]

The purpose of the Exchange's proposed rule change is to allow the listing and trading of the proposed Funds and future funds of the same type. The Commission does not believe that approving this proposed rule change would be consistent with the requirement under the Exchange Act that an exchange's rules be consistent with the protection of investors and the public interest, because the Commission has stated its intention to deny the Trust's request for exemptive relief under the 1940 Act and because denying this exemptive relief would mean that the Funds could not legally operate.[62]

IV. Conclusion

For the reasons set forth above, the Commission does not find that the proposed rule change is consistent with the requirements of the Exchange Act and the rules and regulations thereunder applicable to a national securities exchange, and in particular, with Section 6(b)(5) of the Exchange Act.[63]

It is therefore ordered, pursuant to Section 19(b)(2) of the Exchange Act, that the proposed rule change (SR–BATS–2014–018) be, and it hereby is, disapproved.

For the Commission, by the Division of Trading and Markets, pursuant to delegated authority.[64]

Kevin M. O'Neill,

Deputy Secretary.

[FR Doc. 2014–26947 Filed 11–13–14; 8:45 am]

BILLING CODE 8011–01–P

[59] *See* note 3 and accompanying text, *supra.* The Trust, the Advisor, and the Distributor submitted an application for an order under section 6(c) of the 1940 Act for an exemption from sections 2(a)(32), 5(a)(1), 22(d) and 22(e) of the 1940 Act and rule 22c–1 under the 1940 Act; under sections 6(c) and 17(b) of the 1940 Act for an exemption from sections 17(a)(1) and 17(a)(2) of the 1940 Act; and under section 12(d)(1)(J) of the 1940 Act for an exemption from sections 12(d)(1)(A) and 12(d)(1)(B) of the 1940 Act.

[60] Notice of Application for Exemptive Relief, *supra* note 3, at 3.

[61] *Id.* at 31.

[62] The Commission's determinations under Section 6(c) of the 1940 Act with respect to the Funds are preliminary and could change if a hearing were requested, the Commission were to grant the request, and persuasive new information were presented. Under Section 19(b)(2) of the Exchange Act, however, the Commission must approve, disapprove, or institute proceedings to disapprove this proposed rule change by November 11, 2014, and it must do so on the basis of the facts as they currently exist, irrespective of any information that might be presented to or considered by the Commission at a later date in the context of its final determination under Section 6(c) of the 1940 Act.

[63] Having found for the reasons explained above that the Exchange's proposed rule change is not consistent with the requirements of the Exchange Act, the Commission does not believe it is necessary to address each of the particular objections raised by the commenter who opposes the proposed rule change.

[64] 17 CFR 200.30–3(a)(12).

SECURITIES AND EXCHANGE COMMISSION

[Release No. 34–73564; File No. SR–EDGA–2014–26]

Self-Regulatory Organizations; EDGA Exchange, Inc.; Notice of Filing and Immediate Effectiveness of a Proposed Rule Change Related to Fees for Use of EDGA Exchange, Inc.

November 7, 2014.

Pursuant to Section 19(b)(1) of the Securities Exchange Act of 1934 (the ''Act''),[1] and Rule 19b–4 thereunder,[2] notice is hereby given that on October 31, 2014, EDGA Exchange, Inc. (the ''Exchange'' or ''EDGA'') filed with the Securities and Exchange Commission (''Commission'') the proposed rule change as described in Items I, II and III below, which Items have been prepared by the Exchange. The Exchange has designated the proposed rule change as one establishing or changing a member due, fee, or other charge imposed by the Exchange under Section 19(b)(3)(A)(ii) of the Act [3] and Rule 19–4(f)(2) thereunder,[4] which renders the proposed rule change effective upon filing with the Commission. The Commission is publishing this notice to solicit comments on the proposed rule change from interested persons.

I. Self-Regulatory Organization's Statement of the Terms of Substance of the Proposed Rule Change

The Exchange filed a proposal to amend the fee schedule applicable to Members [5] and non-members of the Exchange pursuant to EDGA Rules 15.1(a) and (c). Changes to the fee schedule pursuant to this proposal are effective upon filing.

The text of the proposed rule change is available at the Exchange's Web site at *http://www.directedge.com,* at the principal office of the Exchange, and at the Commission's Public Reference Room.

II. Self-Regulatory Organization's Statement of the Purpose of, and Statutory Basis for, the Proposed Rule Change

In its filing with the Commission, the Exchange included statements concerning the purpose of and basis for the proposed rule change and discussed any comments it received on the proposed rule change. The text of these statements may be examined at the places specified in Item IV below. The Exchange has prepared summaries, set forth in Sections A, B, and C below, of the most significant parts of such statements.

A. Self-Regulatory Organization's Statement of the Purpose of, and the Statutory Basis for, the Proposed Rule Change

1. Purpose

The Exchange proposes to amend its Fee Schedule to decrease the fee for orders yielding Flag K, which routes to PSX using ROUC or ROUE routing strategies. In securities priced at or above $1.00, the Exchange currently assesses a fee of $0.0026 per share for Members' orders that yield Flag K. The Exchange proposes to amend its Fee Schedule to decrease this fee to $0.0024 per share from $0.0026 per share. The proposed change represents a pass through of the rate that Direct Edge ECN LLC (d/b/a DE Route) (''DE Route''), the Exchange's affiliated routing broker-dealer, is charged for routing orders to PSX when it does not qualify for a volume tiered reduced fee. The proposed change is in response to PSX's November 2014 fee change where PSX decreased the fee to remove liquidity via routable order types it charges its customers, from a fee of $0.0026 per share to a fee of $0.0024 per share.[6]

[1] 15 U.S.C. 78s(b)(1).

[2] 17 CFR 240.19b–4.

[3] 15 U.S.C. 78s(b)(3)(A)(ii).

[4] 17 CFR 240.19b–4(f)(2).

[5] The term ''Member'' is defined as ''any registered broker or dealer, or any person associated with a registered broker or dealer, that has been admitted to membership in the Exchange. A Member will have the status of a ''member'' of the Exchange as that term is defined in Section 3(a)(3) of the Act.'' *See* Exchange Rule 1.5(n).

[6] *See* PSX, Equity Trader Alert 2014–95, Updates to PSX and BX Pricing for November 2014, dated October 27, 2014, available at *http://*

Continued

When DE Route routes to PSX, it will now be charged a standard rate of $0.0024 per share.[7] DE Route will pass through this rate on PSX to the Exchange and the Exchange, in turn, will pass through this rate to its Members. The Exchange proposes to implement this amendment to its Fee Schedule on November 3, 2014.

2. Statutory Basis

The Exchange believes that the proposed rule change is consistent with the objectives of Section 6 of the Act,[8] in general, and furthers the objectives of Section 6(b)(4),[9] in particular, as it is designed to provide for the equitable allocation of reasonable dues, fees and other charges among its Members and other persons using its facilities. The Exchange believes that its proposal to decrease the pass through fee for Members' orders that yield Flag K from $0.0026 per share to $0.0024 per share represents an equitable allocation of reasonable dues, fees, and other charges among Members and other persons using its facilities because the Exchange does not levy additional fees or offer additional rebates for orders that it routes to PSX through DE Route. Prior to PSX's November 2014 fee change, PSX charged its members, which includes DE Route, a fee of $0.0026 per share to remove liquidity using non-routable order types, which DE Route passed through to the Exchange and the Exchange charged to its Members. In November 2014, PSX decreased this fee from $0.0026 per share to $0.0024 per share.[10] Therefore, the Exchange believes that its proposal to pass through a fee of $0.0024 per share for orders that yield Flag K is equitable and reasonable because it accounts for the pricing changes on PSX. In addition, the proposal allows the Exchange to charge its Members a pass-through rate for orders that are routed to PSX. Furthermore, the Exchange notes that routing through DE Route is voluntary. Lastly, the Exchange also believes that the proposed amendment is non-discriminatory because it applies uniformly to all Members.

B. Self-Regulatory Organization's Statement on Burden on Competition

These proposed rule changes do not impose any burden on competition that is not necessary or appropriate in furtherance of the purposes of the Act. The Exchange does not believe that any of these changes represent a significant departure from previous pricing offered by the Exchange or pricing offered by the Exchange's competitors. Additionally, Members may opt to disfavor EDGA's pricing if they believe that alternatives offer them better value. Accordingly, the Exchange does not believe that the proposed changes will impair the ability of Members or competing venues to maintain their competitive standing in the financial markets. The Exchange believes that its proposal to pass through a fee of $0.0024 per share for Members' orders that yield Flag K would increase intermarket competition because it offers customers an alternative means to route to PSX for the same price as entering orders on PSX directly. The Exchange believes that its proposal would not burden intramarket competition because the proposed rate would apply uniformly to all Members.

C. Self-Regulatory Organization's Statement on Comments on the Proposed Rule Change Received From Members, Participants, or Others

The Exchange has not solicited, and does not intend to solicit, comments on this proposed rule change. The Exchange has not received any unsolicited written comments from Members or other interested parties.

III. Date of Effectiveness of the Proposed Rule Change and Timing for Commission Action

The foregoing rule change has become effective pursuant to Section 19(b)(3)(A) of the Act[11] and paragraph (f) of Rule 19b–4 thereunder.[12] At any time within 60 days of the filing of the proposed rule change, the Commission summarily may temporarily suspend such rule change if it appears to the Commission that such action is necessary or appropriate in the public interest, for the protection of investors, or otherwise in furtherance of the purposes of the Act.

IV. Solicitation of Comments

Interested persons are invited to submit written data, views, and arguments concerning the foregoing, including whether the proposed rule change is consistent with the Act. Comments may be submitted by any of the following methods:

Electronic Comments

- Use the Commission's Internet comment form (*http://www.sec.gov/rules/sro.shtml*); or
- Send an email to *rule-comments@sec.gov.* Please include File Number SR–EDGA–2014–26 on the subject line.

Paper Comments

- Send paper comments in triplicate to Secretary, Securities and Exchange Commission, 100 F Street NE., Washington, DC 20549–1090.

All submissions should refer to File Number SR–EDGA–2014–26. This file number should be included on the subject line if email is used. To help the Commission process and review your comments more efficiently, please use only one method. The Commission will post all comments on the Commission's Internet Web site (*http://www.sec.gov/rules/sro.shtml).* Copies of the submission, all subsequent amendments, all written statements with respect to the proposed rule change that are filed with the Commission, and all written communications relating to the proposed rule change between the Commission and any person, other than those that may be withheld from the public in accordance with the provisions of 5 U.S.C. 552, will be available for Web site viewing and printing in the Commission's Public Reference Room, 100 F Street NE., Washington, DC 20549, on official business days between the hours of 10:00 a.m. and 3:00 p.m. Copies of the filing also will be available for inspection and copying at the principal office of the Exchange. All comments received will be posted without change; the Commission does not edit personal identifying information from submissions. You should submit only information that you wish to make available publicly. All submissions should refer to File Number SR–EDGA–2014–26, and should be submitted on or before December 5, 2014.

For the Commission, by the Division of Trading and Markets, pursuant to delegated authority.[13]

Kevin M. O'Neill,

Deputy Secretary.

[FR Doc. 2014–26951 Filed 11–13–14; 8:45 am]

BILLING CODE 8011–01–P

www.nasdaqtrader.com/MicroNews.aspx?id=ETA2014-95.

[7] The Exchange notes that to the extent DE Route does or does not achieve any volume tiered reduced fee on PSX, its rate for Flag K will not change.

[8] 15 U.S.C. 78f.

[9] 15 U.S.C. 78f(b)(4).

[10] *See* supra *note 6.*

[11] 15 U.S.C. 78s(b)(3)(A).

[12] 17 CFR 240.19b–4(f).

[13] 17 CFR 200.30–3(a)(12).

SECURITIES AND EXCHANGE COMMISSION

[Release No. 34–73561; File No. SR–NYSEArca–2014–102]

Self-Regulatory Organizations; NYSE Arca, Inc.; Order Approving a Proposed Rule Change, as Modified by Amendment No. 1 Thereto, Proposing To List and Trade Shares of the Greenhaven Coal Fund Under NYSE Arca Equities Rule 8.200, Commentary .02

November 7, 2014.

I. Introduction

On September 5, 2014, NYSE Arca, Inc. (''Exchange'' or ''NYSE Arca'') filed with the Securities and Exchange Commission (''Commission''), pursuant to Section 19(b)(1) of the Securities Exchange Act of 1934 (''Exchange Act'') [1] and Rule 19b–4 thereunder,[2] a proposed rule change to list and trade shares (''Shares'') of the Greenhaven Coal Fund (the ''Fund''), pursuant to NYSE Arca Equities Rule 8.200, Commentary .02. On September 18, 2014, the Exchange filed Amendment No. 1 to the proposed rule change, which superseded and replaced the proposed rule change as originally filed. The proposed rule change, as modified by Amendment No. 1, was published for comment in the **Federal Register** on September 25, 2014.[3] The Commission received no comments on the proposal. This order approves the proposed rule change, as modified by Amendment No. 1.

II. Description of the Proposed Rule Change

The Exchange proposes to list and trade Shares pursuant to NYSE Arca Equities Rule 8.200, Commentary .02, which permits the listing of Trust Issued Receipts (''TIRs'').[4] The Exchange has represented that the Fund will meet the initial and continued listing requirements applicable to TIRs in NYSE Arca Equities Rule 8.200 and Commentary .02 thereto.[5] The Exchange deems the Shares to be equity securities, thus rendering trading in the Shares subject to the Exchange's existing rules governing the trading of equity securities.[6]

The Fund is a commodity pool that is organized as a Delaware statutory trust. The Fund's trustee is Christiana Trust, a division of Wilmington Savings Fund Society, FSB, and the Fund's sponsor is GreenHaven Coal Services, LLC (''Sponsor'').[7] ALPS Distributors, Inc. will be the Fund's marketing agent and distributor. Bank of New York Mellon will be the Fund's administrator and transfer agent and will calculate the net asset value (''NAV'') on a daily basis.

The Exchange states that the investment objective of the Fund is to provide investors with exposure to the daily change in the price of coal futures, before expenses and liabilities of the Fund. The Fund intends to achieve this objective by investing substantially all of its assets in a three-month strip [8] of the nearest calendar quarter of Rotterdam coal futures contracts (''Coal Futures'') traded on the CME's Globex CME ClearPort clearing services trading platforms. All of the Fund's positions in Coal Futures will be cleared by CME clearing member firms. The Sponsor will seek to invest the Fund's cash collateral in 13-week U.S. Treasury Bills.

Additional information regarding the Fund, including the NAV calculation, operation of the Fund, portfolio composition, restrictions, risks, fees, expenses, and Share creations and redemption can be found in the Notice and the Registration Statement.[9]

III. Discussion and Commission Findings

After careful review, the Commission finds that the Exchange's proposal to list and trade Shares of the Fund is consistent with the Exchange Act and the rules and regulations thereunder applicable to a national securities exchange.[10] In particular, the Commission finds that the proposed rule change is consistent with Section 6(b)(5) of the Exchange Act,[11] which requires, among other things, that the Exchange's rules be designed to prevent fraudulent and manipulative acts and practices, promote just and equitable principles of trade, to remove impediments to and perfect the mechanism of a free and open market and a national market system, and, in general, to protect investors and the public interest. The Commission also finds that the proposal is consistent with Section 11A(a)(1)(C)(iii) of the Exchange Act,[12] which sets forth Congress' finding that it is in the public interest and appropriate for the protection of investors and the maintenance of fair and orderly markets to assure the availability to brokers, dealers, and investors of information with respect to quotations for and transactions in securities.

Quotation and last-sale for the Shares will be available via the facilities of the Consolidated Tape Association.[13] The Exchange's Web site will provide daily trading volume, closing prices, and NAV for the Shares.[14] NYSE Euronext Global Index Feed and online information services will provide the intraday Indicative Fund Value (''IFV'') on a per-Share basis, which will be calculated by one or more major market vendors every 15 seconds during the Exchange's Core Trading Session.[15] The Fund's Web site will post the daily NAV, as well as a breakdown of the holdings of the Fund.[16] The Web sites for the Fund or the Exchange will also provide the following information: (1) The current NAV per Share daily and the prior business day's NAV and the reported closing price; (2) the midpoint of the bid-ask price in relation to the NAV as of the time the NAV is calculated (''Bid-Ask Price''); (3) calculation of the premium or discount of such price against such NAV; (4) the bid-ask price of Shares determined using the highest bid and lowest offer as of the time of calculation of the NAV; (5) data in chart form displaying the frequency distribution of discounts and premiums of the Bid-Ask Price against the NAV, within appropriate ranges for each of the four previous calendar quarters; (6) the prospectus; and (7) other applicable quantitative information.[17]

---

[1] 15 U.S.C. 78s(b)(1).

[2] 17 CFR 240.19b–4.

[3] *See* Securities Exchange Act Release No. 73149 (September 19, 2014), 79 FR 57640 (''Notice'').

[4] On September 5, 2014, the Fund filed with the Commission a pre-effective amendment to its registration statement on Form S–1 under the Securities Act of 1933 (15 U.S.C. 77a) relating to the Fund. (File No. 333–182301) (''Registration Statement'').

[5] *See* Notice, *supra* note 3, 79 FR at 57645.

[6] *See id.* at 57646.

[7] The Sponsor is registered with the Commodity Futures Trading Commission as a commodity pool operator, and is approved as a member of the National Futures Association. The Sponsor is a wholly-owned subsidiary of GreenHaven Group, LLC and is affiliated with GreenHaven Commodity Services, LLC, a commodities trading firm.

[8] With regard to a ''three-month strip,'' ''strip'' is a term used in futures markets to describe a series of delivery months for an individual futures contract. A calendar strip is a three-month strip of one of the four calendar quarters. For example, a three-month calendar strip for the third quarter 2014 includes July 2014, August 2014, and September 2014 coal futures contracts.

[9] *See supra* notes 3 and 4, respectively.

[10] In approving this proposed rule change, the Commission has considered the proposed rule's impact on efficiency, competition and capital formation. *See* 15 U.S.C. 78c(f).

[11] 15 U.S.C. 78f(b)(5).

[12] 15 U.S.C. 78k–1(a)(1)(C)(iii).

[13] *See* Notice, *supra* note 3, 79 FR at 57645.

[14] *See id.*

[15] *See id.*

[16] *See id.*

[17] *See id.*

Quotation and last-sale information for the Coal Futures will be widely disseminated through a variety of major market data vendors worldwide.[18] The spot price of coal is also available on a 24-hour basis from major market vendors. The Exchange further represents that complete real-time price (and volume) data for such contracts is available by subscription from certain market data vendors.[19] For Coal Futures, the CME also provides delayed futures price (and volume) information on current and past trading sessions and market news free of charge on its Web site.[20] The closing price and settlement prices of Coal Futures are also readily available from the CME.[21]

The Commission believes that the proposal to list and trade Shares is reasonably designed to promote fair disclosure of information that may be necessary to price Shares appropriately and to prevent trading when a reasonable degree of transparency cannot be assured. If the Exchange becomes aware that the NAV with respect to the Shares is not disseminated to all market participants at the same time, it will halt trading in the Shares until such time as the NAV is available to all market participants.[22] If the IFV or value of Coal Futures is not being disseminated as required, the Exchange may halt trading during the day in which the disruption occurs; if the interruption persists past the trading day in which it occurred, the Exchange will halt trading no later than the beginning of the trading day following the interruption.[23] The Exchange will also consider halting trading for the following reasons: (1) The extent to which trading is not occurring in the Coal Futures; (2) if the creation or redemption of Shares is suspended for a period that, in the judgment of the Exchange, may detrimentally impact Exchange trading of the Shares; or (3) whether other unusual conditions or circumstances detrimental to the maintenance of a fair and orderly market are present.[24]

Moreover, the trading of the Shares will be subject to NYSE Arca Equities Rule 8.200, Commentary .02(e), which sets forth certain restrictions on Equity Trading Permit (''ETP'') Holders acting as registered market makers in TIRs to facilitate surveillance. The Commission notes that the Financial Industry Regulatory Authority (''FINRA''), on behalf of the Exchange, will communicate as needed regarding trading in the Shares and the Coal Futures with other markets and other entities that are members of the Intermarket Surveillance Group (''ISG''), and FINRA may obtain trading information regarding trading in the Shares and the Coal Futures from such markets and other entities that are members of ISG or with which the Exchange has in place a comprehensive surveillance sharing agreement.[25]

In support of this proposal, the Exchange has made representations, including that:

(1) A minimum of 100,000 Shares for the Fund will be outstanding as of the start of trading on the Exchange.[26]

(2) The Exchange has appropriate rules to facilitate transactions in the Shares during all trading sessions.[27]

(3) Its trading surveillance procedures are adequate to properly monitor Exchange trading of the Shares in all trading sessions and to deter and detect violations of Exchange rules and applicable federal securities laws.[28]

(4) CME is a member of the ISG.[29]

(5) Prior to commencement of trading, the Exchange will inform its ETP Holders in an Information Bulletin of the special characteristics and risks associated with trading the Shares. Specifically, the Information Bulletin will discuss the following: (1) The risks involved in trading the Shares during the Opening and Late Trading Sessions, or a portion of the Core Trading Session, when an updated IFV will not be calculated or publicly disseminated; (2) the procedures for purchases and redemptions of Shares in Basket size (and that Shares are not individually redeemable); (3) NYSE Arca Equities Rule 9.2(a), which imposes a duty of due diligence on its ETP Holders to learn the essential facts relating to every customer prior to trading the Shares; (4) how information regarding the IFV is disseminated; (5) the requirement that ETP Holders deliver a prospectus to investors purchasing newly issued Shares prior to or concurrently with the confirmation of a transaction; and (6) trading information.[30]

This order is based on the Exchange's representations.

For the forgoing reasons, the Commission believes the Exchange's proposal to list and trade the Shares is consistent with the Exchange Act.

IV. Conclusion

It is therefore ordered, pursuant to Section 19(b)(2) of the Exchange Act,[31] that the proposed rule change (SR–NYSEArca–2014–102), as modified by Amendment No. 1 thereto, be, and it hereby is, approved.

For the Commission, by the Division of Trading and Markets, pursuant to delegated authority.[32]

Kevin M. O'Neill,

Deputy Secretary.

[FR Doc. 2014–26948 Filed 11–13–14; 8:45 am]

BILLING CODE 8011–01–P

[18] *See id.*

[19] *See id.*

[20] *See id.*

[21] *See id.*

[22] *See id.* at 57646.

[23] The Exchange also notes that the Exchange may halt trading during the day in which an interruption of the dissemination of the IFV or the value of the applicable futures contracts occurs. *See id.*

[24] *See id.* Additionally, trading in Shares will be subject to trading halts caused by extraordinary market volatility pursuant to the Exchange's ''circuit breaker'' rule. *See* NYSE Arca Equities Rule 7.12.

[25] *See* Notice, *supra* note 3, 79 FR at 57646.

[26] *See id.* at 57645.

[27] *See id.* at 57646.

[28] *See id.*

[29] *See id.*

[30] *See id.*

[31] 15 U.S.C. 78s(b)(2).

[32] 17 CFR 200.30–3(a)(12).

SECURITIES AND EXCHANGE COMMISSION

[Release No. 34–73556; File No. SR–NYSEArca–2014–85]

Self-Regulatory Organizations; NYSE Arca, Inc.; Notice of Filing of Proposed Rule Change Relating to the Listing and Trading of Shares of the PIMCO Low Duration Investment Grade Corporate Bond Active Exchange-Traded Fund Under NYSE Arca Equities Rule 8.600

November 7, 2014.

Pursuant to Section 19(b)(1)[1] of the Securities Exchange Act of 1934 (the ''Act'')[2] and Rule 19b–4 thereunder,[3] notice is hereby given that, on October 23, 2014, NYSE Arca, Inc. (the ''Exchange'' or ''NYSE Arca'') filed with the Securities and Exchange Commission (the ''Commission'') the proposed rule change as described in Items I and II below, which Items have been prepared by the self-regulatory organization. The Commission is publishing this notice to solicit comments on the proposed rule change from interested persons.

I. Self-Regulatory Organization's Statement of the Terms of Substance of the Proposed Rule Change

The Exchange proposes to list and trade shares of the following under NYSE Arca Equities Rule 8.600 (''Managed Fund Shares''): PIMCO Low Duration Investment Grade Corporate Bond Active Exchange-Traded Fund.

[1] 15 U.S.C. 78s(b)(1).

[2] 15 U.S.C. 78a.

[3] 17 CFR 240.19b–4.

The text of the proposed rule change is available on the Exchange's Web site at *www.nyse.com,* at the principal office of the Exchange, and at the Commission's Public Reference Room.

II. Self-Regulatory Organization's Statement of the Purpose of, and Statutory Basis for, the Proposed Rule Change

In its filing with the Commission, the self-regulatory organization included statements concerning the purpose of, and basis for, the proposed rule change and discussed any comments it received on the proposed rule change. The text of those statements may be examined at the places specified in Item IV below. The Exchange has prepared summaries, set forth in sections A, B, and C below, of the most significant parts of such statements.

A. Self-Regulatory Organization's Statement of the Purpose of, and the Statutory Basis for, the Proposed Rule Change

1. Purpose

The Exchange proposes to list and trade shares (''Shares'') of the following under NYSE Arca Equities Rule 8.600,[4] which governs the listing and trading of Managed Fund Shares: [5] PIMCO Low Duration Investment Grade Corporate Bond Active Exchange-Traded Fund (''Fund''). The Shares will be offered by PIMCO ETF Trust (the ''Trust''), a statutory trust organized under the laws of the State of Delaware and registered with the Commission as an open-end management investment company.[6]

The investment manager to the Fund will be Pacific Investment Management Company LLC (''PIMCO'' or the ''Adviser''). PIMCO Investments LLC will serve as the distributor for the Fund (''Distributor''). State Street Bank & Trust Co. will serve as the custodian and transfer agent for the Fund (''Custodian'' or ''Transfer Agent'').

Commentary .06 to Rule 8.600 provides that, if the investment adviser to the investment company issuing Managed Fund Shares is affiliated with a broker-dealer, such investment adviser shall erect a ''fire wall'' between the investment adviser and the broker-dealer with respect to access to information concerning the composition and/or changes to such investment company portfolio.[7] In addition, Commentary .06 further requires that personnel who make decisions on the open-end fund's portfolio composition must be subject to procedures designed to prevent the use and dissemination of material nonpublic information regarding the open-end fund's portfolio. The Adviser is not registered as a broker-dealer, but is affiliated with a broker-dealer, and will implement a ''fire wall'' with respect to such broker-dealer affiliate regarding access to information concerning the composition and/or changes to the Fund's portfolio. If PIMCO elects to hire a sub-adviser for the Fund that is registered as a broker-dealer or is affiliated with a broker-dealer, such sub-adviser will implement a fire wall with respect to its relevant personnel or its broker-dealer affiliate regarding access to information concerning the composition and/or changes to the portfolio and will be subject to procedures designed to prevent the use and dissemination of material non-public information regarding such portfolio.

In the event (a) the Adviser becomes registered as a broker-dealer or newly affiliated with a broker-dealer, or (b) any new adviser or sub-adviser is a registered broker-dealer or becomes affiliated with a broker-dealer, it will implement a fire wall with respect to its relevant personnel or its broker-dealer affiliate regarding access to information concerning the composition and/or changes to a portfolio, and will be subject to procedures designed to prevent the use and dissemination of material non-public information regarding such portfolio.

Characteristics of the Fund [8]

According to the Registration Statement, in selecting investments for the Fund, PIMCO will develop an outlook for interest rates, currency exchange rates and the economy, analyze credit and call risks, and use other investment selection techniques. The proportion of the Fund's assets committed to investment in securities with particular characteristics (such as quality, sector, interest rate or maturity) will vary based on PIMCO's outlook for the U.S. economy and the economies of other countries in the world, the financial markets and other factors.

With respect to the Fund, in seeking to identify undervalued currencies, PIMCO may consider many factors, including but not limited to, longer-term analysis of relative interest rates, inflation rates, real exchange rates, purchasing power parity, trade account balances and current account balances, as well as other factors that influence exchange rates such as flows, market technical trends and government policies. With respect to fixed income investing, PIMCO will attempt to identify areas of the bond market that are undervalued relative to the rest of the market. PIMCO will identify these areas by grouping fixed income investments into sectors such as money markets, governments, corporates, mortgages, asset-backed and

[4] The Commission has previously approved the listing and trading on the Exchange of other actively managed funds under Rule 8.600. *See, e.g.,* Securities Exchange Act Release Nos. 60981 (November 10, 2009), 74 FR 59594 (November 18, 2009) (SR–NYSEArca–2009–79) (order approving Exchange listing and trading of five fixed income funds of the PIMCO ETF Trust); 72666 (July 24, 2014), 79 FR 44224 (July 30, 2014) (SR–NYSEArca–2013–122) (order approving proposed rule change relating to use of derivative instruments by the PIMCO Total Return Exchange Traded Fund).

[5] A Managed Fund Share is a security that represents an interest in an investment company registered under the Investment Company Act of 1940 (15 U.S.C. 80a–1) (''1940 Act'') organized as an open-end investment company or similar entity that invests in a portfolio of securities selected by its investment adviser consistent with its investment objectives and policies. In contrast, an open-end investment company that issues Investment Company Units, listed and traded on the Exchange under NYSE Arca Equities Rule 5.2(j)(3), seeks to provide investment results that correspond generally to the price and yield performance of a specific foreign or domestic stock index, fixed income securities index or combination thereof.

[6] The Trust is registered under the 1940 Act. On June 17, 2014, the Trust filed an amendment to its registration statement on Form N–1A under the Securities Act of 1933 (15 U.S.C. 77a) (''1933 Act'') and the 1940 Act relating to the Fund (File Nos. 333–155395 and 811–22250) (the ''Registration Statement''). The description of the operation of the Trust and the Fund herein is based, in part, on the Registration Statement. In addition, the Commission has issued an order granting certain exemptive relief to the Trust under the 1940 Act. *See* Investment Company Act Release No. 28993 (November 10, 2009) (File No. 812–13571) (''Exemptive Order'').

[7] An investment adviser to an open-end fund is required to be registered under the Investment Advisers Act of 1940 (the ''Advisers Act''). As a result, the Adviser and its related personnel are subject to the provisions of Rule 204A–1 under the Advisers Act relating to codes of ethics. This Rule requires investment advisers to adopt a code of ethics that reflects the fiduciary nature of the relationship to clients as well as compliance with other applicable securities laws. Accordingly, procedures designed to prevent the communication and misuse of non-public information by an investment adviser must be consistent with Rule 204A–1 under the Advisers Act. In addition, Rule 206(4)–7 under the Advisers Act makes it unlawful for an investment adviser to provide investment advice to clients unless such investment adviser has (i) adopted and implemented written policies and procedures reasonably designed to prevent violations, by the investment adviser and its supervised persons, of the Advisers Act and the Commission rules adopted thereunder; (ii) implemented, at a minimum, an annual review regarding the adequacy of the policies and procedures established pursuant to subparagraph (i) above and the effectiveness of their implementation; and (iii) designated an individual (who is a supervised person) responsible for administering the policies and procedures adopted under subparagraph (i) above.

[8] Many of the investment strategies of the Fund are discretionary, which means that PIMCO can decide from time to time whether to use them or not.

international. Sophisticated proprietary software will then assist in evaluating sectors and pricing specific investments. Once investment opportunities are identified, PIMCO will shift assets among sectors depending upon changes in relative valuations, credit spreads and other factors.

Fixed Income Instruments

Among other investments described in more detail herein, the Fund may invest in Fixed Income Instruments, which include any one or more of the following:

- Securities issued or guaranteed by the U.S. Government, its agencies or government-sponsored enterprises (''U.S. Government Securities'');
- Corporate debt securities of U.S. and non-U.S. issuers, including convertible securities and corporate commercial paper; [9]
- Mortgage-backed and other asset-backed securities; [10]
- Inflation-indexed bonds issued both by governments and corporations; [11]
- Structured notes, including hybrid or ''indexed'' securities and event-linked bonds; [12]
- Bank capital and trust preferred securities; [13]
- Loans, including loan participations and assignments; [14]
- Delayed funding loans and revolving credit facilities;
- Bank certificates of deposit, fixed time deposits and bankers' acceptances;
- Repurchase agreements on Fixed Income Instruments and reverse repurchase agreements on Fixed Income Instruments;
- Debt securities issued by states or local governments and their agencies, authorities and other government-sponsored enterprises (''Municipal Bonds'');
- Obligations of non-U.S. governments or their subdivisions, agencies and government-sponsored enterprises; and
- Obligations of international agencies or supranational entities.

Use of Derivatives by the Fund

The Fund's investments in derivative instruments will be made in accordance with the 1940 Act and consistent with the Fund's investment objective and policies. With respect to the Fund, derivative instruments will include forwards; [15] exchange-traded and over-the-counter (''OTC'') options contracts; exchange-traded futures contracts; exchange-traded and OTC swap agreements; exchange-traded options on futures contracts; and OTC options on swap agreements.[16] Generally, derivatives are financial contracts whose value depends upon, or is derived from, the value of an underlying asset, reference rate or index, and may relate to stocks, bonds, interest rates, currencies or currency exchange rates, commodities, and related indexes. The Fund may, but is not required to, use derivative instruments for risk management purposes or as part of its investment strategies.[17]

As described further below, the Fund will typically use derivative instruments as a substitute for taking a position in the underlying asset and/or as part of a strategy designed to reduce exposure to other risks, such as interest rate or currency risk. The Fund may also use derivative instruments to enhance returns. To limit the potential risk associated with such transactions, the Fund will segregate or ''earmark'' assets determined to be liquid by PIMCO in accordance with procedures established by the Trust's Board of Trustees and in accordance with the 1940 Act (or, as permitted by applicable regulation, enter into certain offsetting positions) to cover its obligations under derivative instruments. These procedures have been adopted consistent with Section 18 of the 1940 Act and related Commission guidance. In addition, the Fund will include appropriate risk disclosure in its offering documents, including leveraging risk. Leveraging risk is the risk that certain transactions of the Fund, including the Fund's use of derivatives, may give rise to leverage, causing the Fund to be more volatile than if it had not been leveraged.[18] Because the markets for certain securities, or the securities themselves, may be unavailable or cost prohibitive as compared to derivative instruments, suitable derivative transactions may be an efficient alternative for the Fund to obtain the desired asset exposure.

The Adviser believes that derivatives can be an economically attractive substitute for an underlying physical security that the Fund would otherwise purchase. For example, the Fund could purchase Treasury futures contracts instead of physical Treasuries or could sell credit default protection on a corporate bond instead of buying a physical bond. Economic benefits include potentially lower transaction

[9] With respect to the Fund, while non-emerging markets corporate debt securities (excluding commercial paper) generally must have $100 million or more par amount outstanding and significant par value traded to be considered as an eligible investment for the Fund, at least 80% of issues of such securities held by the Fund must have $100 million or more par amount outstanding at the time of investment. *See also* note 33, *infra,* regarding emerging market corporate debt securities.

[10] Mortgage-related and other asset-backed securities include collateralized mortgage obligations (''CMO''s), commercial mortgage-backed securities, mortgage dollar rolls, CMO residuals, stripped mortgage-backed securities and other securities that directly or indirectly represent a participation in, or are secured by and payable from, mortgage loans on real property. A to-be-announced (''TBA'') transaction is a method of trading mortgage-backed securities. In a TBA transaction, the buyer and seller agree upon general trade parameters such as agency, settlement date, par amount and price. The actual pools delivered generally are determined two days prior to the settlement date.

[11] Inflation-indexed bonds (other than municipal inflation-indexed bonds and certain corporate inflation-indexed bonds) are fixed income securities whose principal value is periodically adjusted according to the rate of inflation (*e.g.,* Treasury Inflation Protected Securities (''TIPS'')). Municipal inflation-indexed securities are municipal bonds that pay coupons based on a fixed rate plus the Consumer Price Index for All Urban Consumers (''CPI''). With regard to municipal inflation-indexed bonds and certain corporate inflation-indexed bonds, the inflation adjustment is reflected in the semi-annual coupon payment.

[12] The Fund may obtain event-linked exposure by investing in ''event-linked bonds'' or ''event-linked swaps'' or by implementing ''event-linked strategies.'' Event-linked exposure results in gains or losses that typically are contingent, or formulaically related to defined trigger events. Examples of trigger events include hurricanes, earthquakes, weather-related phenomena, or statistics relating to such events. Some event-linked bonds are commonly referred to as ''catastrophe bonds.'' If a trigger event occurs, the Fund may lose a portion or its entire principal invested in the bond or notional amount on a swap.

[13] There are two common types of bank capital: Tier I and Tier II. Bank capital is generally, but not always, of investment grade quality. Tier I securities are typically exchange-traded and often take the form of trust preferred securities. Tier II securities are commonly thought of as hybrids of debt and preferred stock. Tier II securities are typically traded over-the-counter, are often perpetual (with no maturity date), callable and, under certain conditions, allow for the issuer bank to withhold payment of interest until a later date. However, such deferred interest payments generally earn interest.

[14] The Fund may invest in fixed- and floating-rate loans, which investments generally will be in the form of loan participations and assignments of portions of such loans.

[15] Forwards are contracts to purchase or sell securities for a fixed price at a future date beyond normal settlement time (forward commitments).

[16] In the future, in the event that there are exchange-traded options on swaps, the Fund may invest in these instruments.

[17] The Fund will seek, where possible, to use counterparties whose financial status is such that the risk of default is reduced; however, the risk of losses resulting from default is still possible. PIMCO's Counterparty Risk Committee evaluates the creditworthiness of counterparties on an ongoing basis. In addition to information provided by credit agencies, PIMCO credit analysts evaluate each approved counterparty using various methods of analysis, including company visits, earnings updates, the broker-dealer's reputation, PIMCO's past experience with the broker-dealer, market levels for the counterparty's debt and equity, the counterparty's liquidity and its share of market participation.

[18] To mitigate leveraging risk, the Adviser will segregate or ''earmark'' liquid assets or otherwise cover the transactions that may give rise to such risk.

costs or attractive relative valuation of a derivative versus a physical bond (*e.g.,* differences in yields).

The Adviser further believes that derivatives can be used as a more liquid means of adjusting portfolio duration as well as targeting specific areas of yield curve exposure, with potentially lower transaction costs than the underlying securities (*e.g.,* interest rate swaps may have lower transaction costs than physical bonds). Similarly, money market futures can be used to gain exposure to short-term interest rates in order to express views on anticipated changes in central bank policy rates. In addition, derivatives can be used to protect client assets through selectively hedging downside (or ''tail risks'') in the Fund.

The Fund also can use derivatives to increase or decrease credit exposure. Index credit default swaps (CDX) can be used to gain exposure to a basket of credit risk by ''selling protection'' against default or other credit events, or to hedge broad market credit risk by ''buying protection.'' Single name credit default swaps (CDS) can be used to allow the Fund to increase or decrease exposure to specific issuers, saving investor capital through lower trading costs. The Fund can use total return swap contracts to obtain the total return of a reference asset or index in exchange for paying a financing cost. A total return swap may be much more efficient than buying underlying securities of an index, potentially lowering transaction costs.

The Adviser believes that the use of derivatives will allow the Fund to selectively add diversifying sources of return from selling options. Option purchases and sales can also be used to hedge specific exposures in the portfolio, and can provide access to return streams available to long-term investors such as the persistent difference between implied and realized volatility. Option strategies can generate income or improve execution prices (*i.e.,* covered calls).

Principal Investments

According to the Registration Statement, the Fund will seek to maximize total return, consistent with prudent investment management. The Fund will seek to achieve its investment objective by investing under normal circumstances [19] at least 80% of its assets in a diversified portfolio of investment grade corporate Fixed Income Instruments [20] of varying maturities, which may be represented by forwards or derivatives such as options, futures contracts or swap agreements (the ''80% Policy''). The average portfolio duration of the Fund normally will vary from zero to 4 years based on PIMCO's forecast for interest rates.[21]

In furtherance of the Fund's 80% Policy, or with respect to the Fund's other investments, the Fund may invest in derivative instruments, subject to applicable law and any other restrictions described herein.

The Fund may purchase or sell securities on a when-issued, delayed delivery or forward commitment basis and may engage in short sales.[22] The Fund may, without limitation, seek to obtain market exposure to the securities in which it primarily invests by entering into a series of purchase and sale contracts or by using other investment techniques (such as buy backs or dollar rolls).[23]

Other (Non-Principal) Investments

The non-principal investments listed below would consist of investments that are not included in the Fund's 80% Policy, as described above. Assets not invested in investment grade corporate Fixed Income Instruments may be invested in other types of Fixed Income Instruments and other instruments, as described below.

The Fund may gain exposure to the real estate sector by investing in OTC real estate-linked derivatives [24], exchange-traded and OTC real estate investment trusts (''REITs''), and exchange traded common, exchange-traded and OTC preferred and exchange-traded and OTC convertible securities of issuers in real estate-related industries.[25]

The Fund may invest in variable and floating rate securities that are not corporate Fixed Income Instruments. The Fund may invest in floaters and inverse floaters that are not corporate Fixed Income Instruments.

As disclosed in the Registration Statement, the Fund may invest in trade claims,[26] privately placed and unregistered securities, and exchange-traded and OTC-traded structured products,[27] including credit-linked securities,[28] and commodity-linked notes. The Fund may invest in Brady Bonds.

The Fund may enter into repurchase agreements on instruments other than corporate Fixed Income Instruments, in addition to repurchase agreements on corporate Fixed Income Instruments mentioned above, in which the Fund purchases a security from a bank or broker-dealer, which agrees to purchase the security at the Fund's cost plus interest within a specified time. Repurchase agreements maturing in more than seven days and which may not be terminated within seven days at

[19] With respect to the Fund, the term ''under normal circumstances'' includes, but is not limited to, the absence of extreme volatility or trading halts in the fixed income markets or the financial markets generally; operational issues causing dissemination of inaccurate market information; or force majeure type events such as systems failure, natural or man-made disaster, act of God, armed conflict, act of terrorism, riot or labor disruption or any similar intervening circumstance.

[20] Corporate Fixed Income Instruments will be: corporate debt securities of U.S. and non-U.S. issuers, including convertible securities and corporate commercial paper, inflation-indexed bonds, bank capital securities, trust preferred securities, and loan participations and assignments.

[21] Duration is a measure used to determine the sensitivity of a security's price to changes in interest rates. The longer a security's duration, the more sensitive it will be to changes in interest rates.

[22] The Fund may make short sales of securities to: (i) Offset potential declines in long positions in similar securities, (ii) to [sic] increase the flexibility of the Fund; (iii) for [sic] investment return; and (iv) as [sic] part of a risk arbitrage strategy.

[23] A dollar roll is similar except that the counterparty is not obligated to return the same securities as those originally sold by the Fund but only securities that are ''substantially identical.''

[24] Real estate-linked derivatives are derivative instruments that are tied to real estate, such as derivatives (*e.g.,* swaps or options) on real-estate related indices or specific real-estate related companies. The value and risks associated with real estate-linked derivative instruments are generally similar to those associated with direct ownership of real estate.

[25] *See infra,* note 30 and accompanying text.

[26] Trade claims are non-securitized rights of payment arising from obligations that typically arise when vendors and suppliers extend credit to a company by offering payment terms for products and services. If the company files for bankruptcy, payments on these trade claims stop and the claims are subject to compromise along with the other debts of the company. Trade claims may be purchased directly from the creditor or through brokers.

[27] The Funds [sic] may invest in structured products, including instruments such as credit-linked securities. For example, a structured product may combine a traditional stock, bond, or commodity with an option or forward contract. Generally, the principal amount, amount payable upon maturity or redemption, or interest rate of a structured product is tied (positively or negatively) to the price of some commodity, currency or securities index or another interest rate or some other economic factor. The interest rate or (unlike most fixed income securities) the principal amount payable at maturity of a structured product may be increased or decreased, depending on changes in the value of the benchmark. An example of exchange-traded structured products would be an [sic] exchange-traded notes or ETNs, such as those listed and traded under NYSE Arca Equities Rule 5.2(j)(6).

[28] Credit-linked securities are generally a basket of derivative instruments, such as credit default swaps or interest rate swaps. Like an investment in a bond, investments in credit-linked securities represent the right to receive periodic income payments (in the form of distributions) and payment of principal at the end of the term of the security. However, these payments are conditioned on the trust's receipt of payments from, and the trust's potential obligations to, the counterparties to the derivative instruments and other securities in which the trust invests.

approximately the amount at which the Fund has valued the agreements will be considered illiquid securities. The Fund may enter into reverse repurchase agreements on instruments other than corporate Fixed Income Instruments, in addition to reverse repurchase agreements on corporate Fixed Income Instruments mentioned above, subject to the Fund's limitations on borrowings.[29] The Fund will segregate or ''earmark'' assets determined to be liquid by PIMCO in accordance with procedures established by the Board to cover its obligations under reverse repurchase agreements.

The Fund may invest only up to 10% of its total assets in preferred stocks, convertible securities, common stocks and other equity-related securities; such limit will not include real-estate related investments, such as REITs or investments in common, preferred or convertible securities of issuers in real estate-related industries.[30]

The Fund may invest up to 20% of its total assets in structured notes, including hybrid or ''indexed'' securities and event-linked bonds.

The Fund may invest up to 15% of its total assets in high yield securities (''junk bonds'') rated below BBB- (with a minimum level of B- at purchase) by Standard & Poor's Ratings Services (''S&P''), or equivalently rated by Moody's Investors Service, Inc. (''Moody's'') or Fitch, Inc. (''Fitch''), or, if unrated, determined by PIMCO to be of comparable quality (except that within such limitation, the Fund may invest in mortgage-related securities rated below B-).[31]

Investment Restrictions

If PIMCO believes that economic or market conditions are unfavorable to investors or that market conditions are not normal, PIMCO may temporarily invest up to 100% of the Fund's assets in certain defensive strategies, including holding a substantial portion of the Fund's assets in cash, cash equivalents or other highly rated short-term securities, including securities issued or guaranteed by the U.S. government, its agencies or instrumentalities. As noted above, the Fund may invest without limit, for temporary or defensive purposes, in such instruments, if PIMCO deems it appropriate to do so.

The Fund may invest in, to the extent permitted by Section 12(d)(1)(A) of the 1940 Act, other affiliated and unaffiliated funds, such as open-end or closed-end management investment companies, including other exchange-traded funds, provided that the Fund's investment in units or shares of investment companies and other open-end collective investment vehicles will not exceed 10% of the Fund's total assets. The Fund may invest its securities lending collateral in one or more money market funds to the extent permitted by Rule 12d1–1 under the 1940 Act, including series of PIMCO Funds.

The Fund may invest up to 20% of its total assets in mortgage-related and other asset backed securities, although this 20% limitation does not apply to securities issued or guaranteed by Federal agencies and/or U.S. government sponsored instrumentalities. The Fund may invest up to 20% of its total assets in securities denominated in foreign currencies, and may invest beyond this limit in U.S. dollar denominated securities of foreign issuers. The Fund will normally limit its foreign currency exposure (from non-U.S. dollar-denominated securities or currencies) to 10% of its total assets.[32] The Fund may engage in foreign currency transactions either on a spot (cash) basis at the rate prevailing in the currency exchange market at the time or through forward currency contracts (''forwards'').

The Fund may invest up to 20% of its total assets in securities and instruments of issuers economically tied to emerging market countries.[33]

The Fund's investments, including investments in derivative instruments, will be subject to all of the restrictions under the 1940 Act, including restrictions with respect to illiquid assets; that is, the limitation that the Fund may hold up to an aggregate amount of 15% of its net assets in illiquid assets (calculated at the time of investment), including Rule 144A securities deemed illiquid by the Adviser, consistent with Commission guidance.[34] The Fund will monitor its

[29] With respect to the Fund, a reverse repurchase agreement involves the sale of a security by the Fund and its agreement to repurchase the instrument at a specified time and price.

[30] Convertible securities are generally preferred stocks and other securities, including fixed income securities and warrants, that are convertible into or exercisable for common stock at a stated price or rate. Equity-related investments may include investments in small-capitalization (''small-cap''), mid-capitalization (''mid-cap'') and large-capitalization (''large-cap'') companies. With respect to the Fund, a small-cap company will be defined as a company with a market capitalization of up to $1.5 billion, a mid-cap company will be defined as a company with a market capitalization of between $1.5 billion and $10 billion and a large-cap company will be defined as a company with a market capitalization above $10 billion. Not more than 10% of the net assets of the Fund in the aggregate invested in equity securities (other than non-exchange-traded investment company securities) shall consist of equity securities, including stocks into which a convertible security is converted, whose principal market is not a member of the Intermarket Surveillance Group (''ISG'') or is a market with which the Exchange does not have a comprehensive surveillance sharing agreement. Furthermore, not more than 10% of the net assets of the Fund in the aggregate invested in futures contracts or exchange-traded options contracts shall consist of futures contracts or exchange-traded options contracts whose principal market is not a member of ISG or is a market with which the Exchange does not have a comprehensive surveillance sharing agreement.

[31] With respect to the Fund, securities rated Ba or lower by Moody's, or equivalently rated by S&P or Fitch, are sometimes referred to as ''high yield securities'' or ''junk bonds'', while securities rated Baa or higher are referred to as ''investment grade.'' Unrated securities may be less liquid than comparable rated securities and involve the risk that the Fund's portfolio manager may not accurately evaluate the security's comparative credit rating. To the extent that the Fund invests in unrated securities, the Fund's success in achieving its investment objective may depend more heavily on the portfolio manager's creditworthiness analysis than if the Fund invested exclusively in rated securities. In determining whether a security is of comparable quality, the Adviser will consider, for example, whether the issuer of the security has issued other rated securities; whether the obligations under the security are guaranteed by another entity and the rating of such guarantor (if any); whether and (if applicable) how the security is collateralized; other forms of credit enhancement (if any); the security's maturity date; liquidity features (if any); relevant cash flow(s); valuation features; other structural analysis; macroeconomic analysis; and sector or industry analysis.

[32] The Fund will limit its investments in currencies to those currencies with a minimum average daily foreign exchange turnover of USD $1 billion as determined by the Bank for International Settlements (''BIS'') Triennial Central Bank Survey. As of the most recent BIS Triennial Central Bank Survey, at least 52 separate currencies had minimum average daily foreign exchange turnover of USD $1 billion. For a list of eligible currencies, *see www.bis.org*.

[33] PIMCO will generally consider an instrument to be economically tied to an emerging market country if the security's ''country of exposure'' is an emerging market country, as determined by the criteria set forth in the Registration Statement. Alternatively, such as when a ''country of exposure'' is not available or when PIMCO believes the following tests more accurately reflect which country the security is economically tied to, PIMCO may consider an instrument to be economically tied to an emerging market country if the issuer or guarantor is a government of an emerging market country (or any political subdivision, agency, authority or instrumentality of such government), if the issuer or guarantor is organized under the laws of an emerging market country, or if the currency of settlement of the security is a currency of an emerging market country. With respect to derivative instruments, PIMCO will generally consider such instruments to be economically tied to emerging market countries if the underlying assets are currencies of emerging market countries (or baskets or indices of such currencies), or instruments or securities that are issued or guaranteed by governments of emerging market countries or by entities organized under the laws of emerging market countries. While emerging markets corporate debt securities (excluding commercial paper) generally must have $200 million or more par amount outstanding and significant par value traded to be considered as an eligible investment for the Fund, at least 80% of issues of such securities held by the Fund must have $200 million or more par amount outstanding at the time of investment.

[34] In reaching liquidity decisions, the Adviser may consider the following factors: the frequency of trades and quotes for the security; the number of

respective portfolio liquidity on an ongoing basis to determine whether, in light of current circumstances, an adequate level of liquidity is being maintained, and will consider taking appropriate steps in order to maintain adequate liquidity if, through a change in values, net assets, or other circumstances, more than 15% of the Fund's net assets are held in illiquid assets. Illiquid assets include securities subject to contractual or other restrictions on resale and other instruments that lack readily available markets as determined in accordance with Commission staff guidance.[35]

The Fund will be diversified within the meaning of the 1940 Act.[36]

The Fund intends to qualify annually and elect to be treated as a regulated investment company under Subchapter M of the Internal Revenue Code.[37] The Fund will not concentrate its investments in a particular industry, as that term is used in the 1940 Act, and as interpreted, modified, or otherwise permitted by a regulatory authority having jurisdiction from time to time.[38]

The Fund's investments, including derivatives, will be consistent with the Fund's investment objective and the Fund's use of derivatives may be used to enhance leverage. However, the Fund's investments will not be used to seek performance that is the multiple or inverse multiple (*i.e.,* 2Xs and 3Xs) of the Fund's broad-based securities market index (as defined in Form N–1A).[39]

Net Asset Value and Derivatives Valuation Methodology for Purposes of Determining Net Asset Value

The net asset value (''NAV'') of the Fund's Shares will be determined by dividing the total value of the Fund's portfolio investments and other assets, less any liabilities, by the total number of Shares outstanding.

The Fund's Shares will be valued as of the close of regular trading (normally 4:00 p.m. Eastern time (''E.T.'') (the ''NYSE Close'')) on each day NYSE Arca is open (''Business Day''). Information that becomes known to the Fund or its agents after the NAV has been calculated on a particular day will not generally be used to retroactively adjust the price of a portfolio asset or the NAV determined earlier that day.

For purposes of calculating NAV, portfolio securities and other assets for which market quotes are readily available will be valued at market value. Market value will generally be determined on the basis of last reported sales prices, or if no sales are reported, based on quotes obtained from a quotation reporting system, established market makers, or pricing services.

Fixed Income Instruments, including those to be purchased under firm commitment agreements/delayed delivery basis, will generally be valued on the basis of quotes obtained from brokers and dealers or independent pricing services. Domestic and foreign fixed income securities will generally be valued on the basis of quotes obtained from brokers and dealers or pricing services using data reflecting the earlier closing of the principal markets for those assets. Prices obtained from independent pricing services use information provided by market makers or estimates of market values obtained from yield data relating to investments or securities with similar characteristics. Short-term debt instruments having a remaining maturity of 60 days or less will generally be valued at amortized cost.

As discussed in more detail below, derivatives will generally be valued on the basis of quotes obtained from brokers and dealers or pricing services using data reflecting the earlier closing of the principal markets for those assets. Local closing prices will be used for all instrument valuation purposes. Foreign currency-denominated derivatives will generally be valued as of the respective local region's market close.

With respect to specific derivatives:

- Currency spot and forward rates from major market data vendors[40] will generally be determined as of the NYSE Close.
- Exchange-traded futures will generally be valued at the settlement price of the relevant exchange.
- A total return swap on an index will be valued at the publicly available index price. The index price, in turn, is determined by the applicable index calculation agent, which generally values the securities underlying the index at the last reported sale price.
- Equity total return swaps will generally be valued using the actual underlying equity at local market closing, while bank loan total return swaps will generally be valued using the evaluated underlying bank loan price minus the strike price of the loan.
- Exchange-traded non-equity options, (for example, options on bonds, Eurodollar options and U.S. Treasury options), index options, and options on futures will generally be valued at the official settlement price determined by the relevant exchange, if available.
- OTC and exchange-traded equity options will generally be valued on a basis of quotes obtained from a quotation reporting system, established market makers, or pricing services or at the settlement price of the applicable exchange.
- OTC FX options will generally be valued by pricing vendors.
- All other swaps such as interest rate swaps, inflation swaps, swaptions, credit default swaps, and CDX/CDS will generally be valued by pricing services.

Exchange-traded equity securities (including common stocks, exchange-traded investment companies, exchange-traded convertible securities, REITs and preferred securities, and exchange-traded structured products) will be valued at the official closing price or the last trading price on the exchange or market on which the security is primarily traded at the time of valuation. If no sales or closing prices are reported during the day, exchange-traded equity securities will generally be valued at the mean of the last available bid and ask quotation on the exchange or market on which the security is primarily traded, or using other market information obtained from quotation reporting systems, established market makers, or pricing services.

dealers willing to purchase or sell the security and the number of other potential purchasers; dealer undertakings to make a market in the security; and the nature of the security and the nature of the marketplace trades (*e.g.,* the time needed to dispose of the security, the method of soliciting offers, and the mechanics of transfer).

[35] The Commission has stated that long-standing Commission guidelines have required open-end funds to hold no more than 15% of their net assets in illiquid securities and other illiquid assets. *See* Investment Company Act Release No. 28193 (March 11, 2008), 73 FR 14618 (March 18, 2008), footnote 34. *See also,* Investment Company Act Release No. 5847 (October 21, 1969), 35 FR 19989 (December 31, 1970) (Statement Regarding ''Restricted Securities''); Investment Company Act Release No. 18612 (March 12, 1992), 57 FR 9828 (March 20, 1992) (Revisions of Guidelines to Form N–1A). A fund's portfolio security is illiquid if it cannot be disposed of in the ordinary course of business within seven days at approximately the value ascribed to it by the fund. *See* Investment Company Act Release No. 14983 (March 12, 1986), 51 FR 9773 (March 21, 1986) (adopting amendments to Rule 2a–7 under the 1940 Act); Investment Company Act Release No. 17452 (April 23, 1990), 55 FR 17933 (April 30, 1990) (adopting Rule 144A under the Securities Act).

[36] The diversification standard is set forth in Section 5(b)(1) of the 1940 Act (15 U.S.C. 80e).

[37] 26 U.S.C. 851.

[38] *See* Form N–1A, Item 9. The Commission has taken the position that a fund is concentrated if it invests more than 25% of the value of its total assets in any one industry. *See, e.g.,* Investment Company Act Release No. 9011 (October 30, 1975), 40 FR 54241 (November 21, 1975).

[39] The Fund's broad-based securities market index will be identified in a future amendment to the Registration Statement following the Fund's first full calendar year of performance.

[40] Major market data vendors may include, but are not limited to: Thomson Reuters, JPMorgan Chase PricingDirect Inc., Markit Group Limited, Bloomberg, Interactive Data Corporation or other major data vendors.

Investment company securities that are not exchange-traded will be valued at NAV. Equity securities traded OTC will be valued based on price quotations obtained from a broker-dealer who makes markets in such securities or other equivalent indications of value provided by a third-party pricing service. Money market instruments, trade claims, OTC REITs, privately placed and unregistered securities, OTC structured products, OTC real-estate linked derivatives, credit-linked securities, commodity-linked notes, Brady Bonds, variable and floating rate securities that are not corporate Fixed Income Instruments; floaters and inverse floaters that are not corporate Fixed Income Instruments and other types of debt securities will generally be valued on the basis of independent pricing services or quotes obtained from brokers and dealers.

If a foreign security's value has materially changed after the close of the security's primary exchange or principal market but before the NYSE Close, the security will be valued at fair value based on procedures established and approved by the Board. Foreign securities that do not trade when the NYSE is open will also be valued at fair value.

Securities and other assets for which market quotes are not readily available will be valued at fair value as determined in good faith by the Board or persons acting at their direction. The Board has adopted methods for valuing securities and other assets in circumstances where market quotes are not readily available, and has delegated to PIMCO the responsibility for applying the valuation methods. In the event that market quotes are not readily available, and the security or asset cannot be valued pursuant to one of the valuation methods, the value of the security or asset will be determined in good faith by the Valuation Committee of the Board of Trustees, generally based upon recommendations provided by PIMCO.

Market quotes are considered not readily available in circumstances where there is an absence of current or reliable market-based data (*e.g.,* trade information, bid/ask information, broker quotes), including where events occur after the close of the relevant market, but prior to the NYSE Close, that materially affect the values of the Fund's securities or assets. In addition, market quotes are considered not readily available when, due to extraordinary circumstances, the exchanges or markets on which the securities trade do not open for trading for the entire day and no other market prices are available. The Board has delegated to PIMCO the responsibility for monitoring significant events that may materially affect the values of the Fund's securities or assets and for determining whether the value of the applicable securities or assets should be re-evaluated in light of such significant events.

When the Fund uses fair value pricing to determine its NAV, securities will not be priced on the basis of quotes from the primary market in which they are traded, but rather may be priced by another method that the Board of Trustees or persons acting at their direction believe reflects fair value. Fair value pricing may require subjective determinations about the value of a security. While the Trust's policy is intended to result in a calculation of the Fund's NAV that fairly reflects security values as of the time of pricing, the Trust cannot ensure that fair values determined by the Board or persons acting at its direction would accurately reflect the price that the Fund could obtain for a security if it were to dispose of that security as of the time of pricing (for instance, in a forced or distressed sale). The prices used by the Fund may differ from the value that would be realized if the securities were sold.

For the Fund's 4:00 p.m. E.T. futures holdings, estimated prices from Reuters will be used if any cumulative futures margin impact is greater than $0.005 to the NAV due to futures movement after the fixed income futures market closes (3:00 p.m. E.T.) and up to the NYSE Close (generally 4:00 p.m. E.T.). Swaps traded on exchanges such as the Chicago Mercantile Exchange (''CME'') or the Intercontinental Exchange (''ICE–US'') will be priced using the applicable exchange closing price where available.

Investments initially valued in currencies other than the U.S. dollar will be converted to the U.S. dollar using exchange rates obtained from pricing services. As a result, the NAV of the Fund's Shares may be affected by changes in the value of currencies in relation to the U.S. dollar. The value of securities traded in markets outside the United States or denominated in currencies other than the U.S. dollar may be affected significantly on a day that the NYSE is closed. As a result, to the extent that the Fund holds foreign (non-U.S.) securities, the NAV of the Fund's Shares may change when an investor cannot purchase, redeem or exchange shares.

Derivatives Valuation Methodology for purposes of Determining Portfolio Indicative Value

On each Business Day, before commencement of trading in Fund Shares on NYSE Arca, the Fund will disclose on its Web site the identities and quantities of the portfolio instruments and other assets held by the Fund that will form the basis for the Fund's calculation of NAV at the end of the Business Day.

In order to provide additional information regarding the intra-day value of Shares of the Fund, one or more major market data vendors will disseminate every 15 seconds through the facilities of the Consolidated Tape Association (''CTA'') or other widely disseminated means an updated Portfolio Indicative Value (''PIV'') for the Fund as calculated by an information provider or market data vendor.

A third party market data provider will calculate the PIV for the Fund. For the purposes of determining the PIV, the third party market data provider's valuation of derivatives and other assets are expected to be similar to its valuation of all securities. The third party market data provider may use market quotes if available or may fair value securities against proxies (such as swap or yield curves).

With respect to specific derivatives:

- Foreign currency derivatives may be valued intraday using market quotes, or another proxy as determined to be appropriate by the third party market data provider.
- Futures may be valued intraday using the relevant futures exchange data, or another proxy as determined to be appropriate by the third party market data provider.
- Interest rate swaps may be mapped to a swap curve and valued intraday based on the swap curve, or another proxy as determined to be appropriate by the third party market data provider.
- CDX/CDS may be valued using intraday data from market vendors, or based on underlying asset price, or another proxy as determined to be appropriate by the third party market data provider.
- Total return swaps may be valued intraday using the underlying asset price, or another proxy as determined to be appropriate by the third party market data provider.
- Exchange listed options may be valued intraday using the relevant exchange data, or another proxy as determined to be appropriate by the third party market data provider.
- OTC options may be valued intraday through option valuation

models (*e.g.,* Black-Scholes) or using exchange-traded options as a proxy, or another proxy as determined to be appropriate by the third party market data provider.

• A third party market data provider's valuation of forwards will be similar to their valuation of the underlying securities, or another proxy as determined to be appropriate by the third party market data provider. The third party market data provider will generally use market quotes if available. Where market quotes are not available, they may fair value securities against proxies (such as swap or yield curves). The Fund's disclosure of forward positions will include information that market participants can use to value these positions intraday.

Disclosed Portfolio

The Fund's disclosure of derivative positions in the applicable Disclosed Portfolio will include information that market participants can use to value these positions intraday. On a daily basis, the Fund will disclose the following information regarding each portfolio holding, as applicable to the type of holding: ticker symbol, CUSIP number or other identifier, if any; a description of the holding (including the type of holding, such as the type of swap); the identity of the security, commodity, index or other asset or instrument underlying the holding, if any; for options, the option strike price; quantity held (as measured by, for example, par value, notional value or number of shares, contracts or units); maturity date, if any; coupon rate, if any; effective date, if any; market value of the holding; and the percentage weighting of the holding in the Fund's portfolio.

Impact on Arbitrage Mechanism

For the Fund, the Adviser believes there will be minimal, if any, impact to the arbitrage mechanism as a result of the use of derivatives. Market makers and participants should be able to value derivatives as long as the positions are disclosed with relevant information. The Adviser believes that the price at which Shares of the Fund trade will continue to be disciplined by arbitrage opportunities created by the ability to purchase or redeem creation Shares of the Fund at their NAV, which should ensure that Shares of the Fund will not trade at a material discount or premium in relation to its NAV.

The Adviser does not believe there will be any significant impacts to the settlement or operational aspects of the Fund's arbitrage mechanism due to the use of derivatives. Because derivatives generally are not eligible for in-kind transfer, they will be substituted with a ''cash in lieu'' amount (as described below) when the Fund processes purchases or redemptions of block-size ''Creation Units'' (as described below) in-kind.

Creations and Redemptions of Shares

According to the Registration Statement, Shares of the Fund that trade in the secondary market will be ''created'' at NAV by Authorized Participants only in block-size Creation Units of 50,000 Shares or multiples thereof.[41] The size of a Creation Unit is subject to change. The Fund will offer and issue Shares at their NAV per Share generally in exchange for a basket of debt securities held by that Fund (the ''Deposit Securities'') together with a deposit of a specified cash payment (the ''Cash Component''), or in lieu of Deposit Securities, the Fund may permit a ''cash-in-lieu'' amount for any reason at the Fund's sole discretion. Alternatively, the Fund may issue Creation Units in exchange for a specified all-cash payment (''Cash Deposit'') (together with Deposit Securities and Cash Component, the ''Fund Deposit''). Similarly, Shares can be redeemed only in Creation Units, generally in-kind for a portfolio of debt securities held by the Fund and/or for a specified amount of cash (collectively, ''Redemption Instruments'').

On any given Business Day, purchases and redemptions of Creation Units will be made in whole or in part on a cash basis if an Authorized Participant deposits or receives (as applicable) cash in lieu of some or all of the Fund Deposit or Redemption Instruments, respectively, solely because such instruments are, in the case of the Fund Deposit, not available in sufficient quantity.[42] In determining whether the Fund will be selling or redeeming Creation Units on a cash or in-kind basis, the key consideration will be the benefit which would accrue to Fund investors. In many cases, investors may benefit by the use of all cash purchase orders because the Adviser would execute trades rather than market makers, and the Adviser may be able to obtain better execution in bond transactions due to its size, experience and potentially stronger relationships in the fixed income markets.

Except when aggregated in Creation Units, Shares will not be redeemable by the Fund. The prices at which creations and redemptions occur will be based on the next calculation of NAV after an order is received. Requirements as to the timing and form of orders will be described in the Authorized Participant agreement. PIMCO will make available on each Business Day via the National Securities Clearing Corporation (''NSCC''), prior to the opening of business (subject to amendments) on the Exchange (currently 9:30 a.m., E.T.), the identity and the required amount of each Deposit Security and the amount of the Cash Component (or Cash Deposit) to be included in the current ''Fund Deposit''[43] (based on information at the end of the previous Business Day). Creations and redemptions must be made by an Authorized Participant.

Additional information regarding the Trust, the Fund and the Shares, including investment strategies, risks, creation and redemption procedures, fees, portfolio holdings, disclosure policies, distributions and taxes is included in the Registration Statement. All terms relating to the Fund that are referred to but not defined in this proposed rule change are defined in the Registration Statement.

Availability of Information

The Trust's Web site (*www.pimcoetfs.com*), which will be publicly available prior to the public offering of Shares of the Fund, will include a form of the prospectus for the Fund that may be downloaded. The Trust's Web site will include additional quantitative information updated on a daily basis, including, for the Fund, (1) daily trading volume, the prior Business Day's reported closing price, NAV and mid-point of the bid/ask spread at the time of calculation of such NAV (the ''Bid/Ask Price''),[44] and a calculation of

[41] The NAV of the Fund's Shares generally will be calculated once daily Monday through Friday as of the close of trading on the New York Stock Exchange (''NYSE''), generally 4:00 p.m. E.T. (the ''NAV Calculation Time'') on any Business Day. NAV per Share will be calculated by dividing the Fund's net assets by the number of the Fund's Shares outstanding. For more information regarding the valuation of Fund investments in calculating the Fund's NAV, *see* the Registration Statement.

The term ''Authorized Participant'' refers to a ''Participating Party'' (a broker-dealer or other participant in the clearing process through the Continuous Net Settlement System of the NSCC; or a Depository Trust Company (''DTC'') Participant who has executed a Participant Agreement (an agreement with the Distributor and Transfer Agent with respect to creations and redemptions of Creation Units) [sic].

[42] Such purchase or redemption transactions are ''custom orders.'' On any given Business Day, if the Fund accepts a custom order, the Adviser represents that the Fund will accept custom orders from all other Authorized Participants on the same basis.

[43] The Deposit Securities and Cash Component or, alternatively, the Cash Deposit, will constitute the Fund Deposit, which will represent the investment amount for a Creation Unit of the Fund.

[44] The Bid/Ask Price of Shares of the Fund will be determined using the mid-point of the highest

Continued

the premium and discount of the Bid/Ask Price against the NAV, and (2) data in chart format displaying the frequency distribution of discounts and premiums of the daily Bid/Ask Price against the NAV, within appropriate ranges, for each of the four previous calendar quarters. On each Business Day, before commencement of trading in Shares in the Core Trading Session (9:30 a.m. E.T. to 4:00 p.m. E.T.) on the Exchange, the Fund will disclose on the Trust's Web site the Disclosed Portfolio as defined in NYSE Arca Equities Rule 8.600(c)(2) that will form the basis for the Fund's calculation of NAV at the end of the Business Day.[45]

The Fund's disclosure of derivative positions in the applicable Disclosed Portfolio will include information that market participants can use to value these positions intraday. On a daily basis, the Fund will disclose the following information regarding each portfolio holding, as applicable to the type of holding: Ticker symbol, CUSIP number or other identifier, if any; a description of the holding (including the type of holding, such as the type of swap); the identity of the security, commodity, index or other asset or instrument underlying the holding, if any; for options, the option strike price; quantity held (as measured by, for example, par value, notional value or number of shares, contracts or units); maturity date, if any; coupon rate, if any; effective date, if any; market value of the holding; and the percentage weighting of the holding in the Fund's portfolio. The Web site information will be publicly available at no charge.

In addition, a basket composition file, which includes the security names and share quantities, if applicable, required to be delivered in exchange for the Fund's Shares, together with estimates and actual cash components, will be publicly disseminated daily prior to the opening of the Exchange via the NSCC. The basket represents one Creation Unit of the Fund. The NAV of Shares of the Fund will normally be determined as of the close of the regular trading session on the Exchange (ordinarily 4:00 p.m. E.T.) on each Business Day. Authorized Participants may refer to the basket composition file for information regarding Fixed Income Instruments, and any other instrument that may comprise the Fund's basket on a given day.

Investors can also obtain the Trust's SAI, the Fund's Shareholder Reports, and the Fund's Forms N–CSR and Forms N–SAR, filed twice a year. The Fund's SAI and Shareholder Reports will be available free upon request from the Trust, and those documents and the Form N–CSR, Form N–PX and Form N–SAR may be viewed on-screen or downloaded from the Commission's Web site at *www.sec.gov.* Intra-day and closing price information regarding exchange-traded equity securities, including common stocks, preferred stocks, securities convertible into stocks, closed-end funds, exchange-traded funds, exchange-traded structured products (including ETNs), exchange-traded REITs, and other equity-related securities, will be available from the exchange on which such securities are traded. Intra-day and closing price information regarding exchange-traded options (including options on futures) and futures will be available from the exchange on which such instruments are traded. Intra-day and closing price information regarding Fixed Income Instruments and other forms of debt securities also will be available from major market data vendors. Price information relating to forwards, spot currency, OTC options and swaps will be available from major market data vendors. Price information regarding, money market instruments, OTC REITs, private activity bonds, trade claims, privately placed and unregistered securities, OTC real estate-linked derivatives, OTC structured products, credit-linked securities, commodity-linked notes, Brady Bonds, variable and floating rate securities that are not corporate Fixed Income Instruments and floaters and inverse floaters that are not corporate Fixed Income Instruments will be available from major market data vendors. Price information regarding other investment company securities will be available from on-line information services and from the Web site for the applicable investment company security. Information regarding market price and trading volume of the Shares will be continually available on a real-time basis throughout the day on brokers' computer screens and other electronic services. Information regarding the previous day's closing price and trading volume information for the Shares will be published daily in the financial section of newspapers. Quotation and last sale information for the Shares will be available via the CTA high-speed line. Exchange-traded options quotation and last sale information for options cleared via the Options Clearing Corporation (''OCC'') is available via the Options Price Reporting Authority (''OPRA''). Price information relating to equity securities traded OTC will be available from major market data vendors. In addition, the PIV, as defined in NYSE Arca Equities Rule 8.600 (c)(3), will be widely disseminated by one or more major market data vendors at least every 15 seconds during the Core Trading Session.[46] The dissemination of the PIV, together with the Disclosed Portfolio, may allow investors to determine an approximate value of the underlying portfolio of the Fund on a daily basis and to provide an estimate of that value throughout the trading day.

Trading Halts

With respect to trading halts, the Exchange may consider all relevant factors in exercising its discretion to halt or suspend trading in the Shares of the Fund.[47] Trading in Shares of the Fund will be halted if the circuit breaker parameters in NYSE Arca Equities Rule 7.12 have been reached. Trading also may be halted because of market conditions or for reasons that, in the view of the Exchange, make trading in the Shares inadvisable. These may include: (1) The extent to which trading is not occurring in the securities and/or the financial instruments comprising the Disclosed Portfolio of the Fund; or (2) whether other unusual conditions or circumstances detrimental to the maintenance of a fair and orderly market are present. Trading in the Shares will be subject to NYSE Arca Equities Rule 8.600(d)(2)(D), which sets forth circumstances under which Shares of the Fund may be halted.

Trading Rules

The Exchange deems the Shares to be equity securities, thus rendering trading in the Shares subject to the Exchange's existing rules governing the trading of equity securities. Shares will trade on the NYSE Arca Marketplace from 4 a.m. to 8 p.m. E.T. in accordance with NYSE Arca Equities Rule 7.34 (Opening, Core, and Late Trading Sessions). The Exchange has appropriate rules to facilitate transactions in the Shares during all trading sessions. As provided in NYSE Arca Equities Rule 7.6, Commentary .03, the minimum price variation (''MPV'') for quoting and entry of orders in equity securities traded on

bid and the lowest offer on the Exchange as of the time of calculation of the Fund's NAV. The records relating to Bid/Ask Prices will be retained by the Fund and its service providers.

[45] Under accounting procedures followed by the Fund, trades made on the prior Business Day (''T'') will be booked and reflected in NAV on the current Business Day (''T+1''). Accordingly, the Fund will be able to disclose at the beginning of the Business Day the portfolio that will form the basis for the NAV calculation at the end of the Business Day.

[46] Currently, it is the Exchange's understanding that several major market data vendors display and/or make widely available PIVs taken from CTA or other data feeds.

[47] *See* NYSE Arca Equities Rule 7.12.

the NYSE Arca Marketplace is $0.01, with the exception of securities that are priced less than $1.00 for which the MPV for order entry is $0.0001.

The Shares will conform to the initial and continued listing criteria under NYSE Arca Equities Rule 8.600. Consistent with NYSE Arca Equities Rule 8.600(d)(2)(B)(ii), the Fund's Reporting Authority will implement and maintain, or be subject to, procedures designed to prevent the use and dissemination of material non-public information regarding the actual components of the Fund's portfolio. The Exchange represents that, for initial and/or continued listing, the Fund will be in compliance with Rule 10A–3 [48] under the Act, as provided by NYSE Arca Equities Rule 5.3. A minimum of 100,000 Shares for the Fund will be outstanding at the commencement of trading on the Exchange. The Exchange will obtain a representation from the issuer of the Shares of the Fund that the NAV per Share will be calculated daily and that the NAV and the Disclosed Portfolio will be made available to all market participants at the same time.

Surveillance

The Exchange represents that trading in the Shares will be subject to the existing trading surveillances, administered by the Financial Industry Regulatory Authority (''FINRA'') on behalf of the Exchange, which are designed to detect violations of Exchange rules and applicable federal securities laws.[49] The Exchange represents that these procedures are adequate to properly monitor Exchange trading of the Shares in all trading sessions and to deter and detect violations of Exchange rules and federal securities laws applicable to trading on the Exchange.

The surveillances referred to above generally focus on detecting securities trading outside their normal patterns, which could be indicative of manipulative or other violative activity. When such situations are detected, surveillance analysis follows and investigations are opened, where appropriate, to review the behavior of all relevant parties for all relevant trading violations.

FINRA, on behalf of the Exchange, will communicate as needed regarding trading in the Shares, exchange-traded options, exchange-traded equities (including common stocks, exchange-traded investment companies, exchange- traded convertibles and preferred securities, exchange-traded REITs, and exchange-traded structured products, including ETNs), futures and options on futures with other markets or other entities that are members of the ISG, and FINRA may obtain trading information regarding trading in the Shares, exchange-traded options, exchange-traded equities, futures and options on futures from such markets or entities. In addition, the Exchange may obtain information regarding trading in the Shares, exchange-traded options, exchange-traded equities, futures and options on futures from markets or other entities that are members of ISG or with which the Exchange has in place a comprehensive surveillance sharing agreement.[50] FINRA, on behalf of the Exchange, is able to access, as needed, trade information for certain fixed income securities held by the Fund reported to FINRA's Trade Reporting and Compliance Engine (''TRACE''). FINRA also can access data obtained from the Municipal Securities Rulemaking Board relating to municipal bond trading activity for surveillance purposes in connection with trading in the Shares.

Not more than 10% of the net assets of the Fund in the aggregate invested in equity securities (other than non-exchange-traded investment company securities) shall consist of equity securities, including stocks into which a convertible security is converted, whose principal market is not a member of the ISG or is a market with which the Exchange does not have a comprehensive surveillance sharing agreement. Furthermore, not more than 10% of the net assets of the Fund in the aggregate invested in futures contracts or exchange-traded options contracts shall consist of futures contracts or exchange-traded options contracts whose principal market is not a member of ISG or is a market with which the Exchange does not have a comprehensive surveillance sharing agreement.

In addition, the Exchange also has a general policy prohibiting the distribution of material, non-public information by its employees.

Information Bulletin

Prior to the commencement of trading, the Exchange will inform its Equity Trading Permit (''ETP'') Holders in an Information Bulletin (''Bulletin'') of the special characteristics and risks associated with trading the Shares. Specifically, the Bulletin will discuss the following: (1) The procedures for purchases and redemptions of Shares in Creation Unit aggregations (and that Shares are not individually redeemable); (2) NYSE Arca Equities Rule 9.2(a), which imposes a duty of due diligence on its ETP Holders to learn the essential facts relating to every customer prior to trading the Shares; (3) the risks involved in trading the Shares during the Opening and Late Trading Sessions when an updated PIV will not be calculated or publicly disseminated; (4) how information regarding the PIV and the Disclosed Portfolio is disseminated; (5) the requirement that ETP Holders deliver a prospectus to investors purchasing newly issued Shares prior to or concurrently with the confirmation of a transaction; and (6) trading information.

In addition, the Bulletin will reference that the Fund is subject to various fees and expenses described in the Registration Statement. The Bulletin will discuss any exemptive, no-action, and interpretive relief granted by the Commission from any rules under the Act. The Bulletin will also disclose that the NAV for the Shares will be calculated after 4:00 p.m. E.T. each trading day.

2. Statutory Basis

The basis under the Act for this proposed rule change is the requirement under Section 6(b)(5) [51] that an exchange have rules that are designed to prevent fraudulent and manipulative acts and practices, to promote just and equitable principles of trade, to remove impediments to, and perfect the mechanism of a free and open market and, in general, to protect investors and the public interest.

The Exchange believes that the proposed rule change is designed to prevent fraudulent and manipulative acts and practices in that the Shares will be listed and traded on the Exchange pursuant to the initial and continued listing criteria in NYSE Arca Equities Rule 8.600. The Exchange has in place surveillance procedures that are adequate to properly monitor trading in the Shares in all trading sessions and to deter and detect violations of Exchange rules and federal securities laws applicable to trading on the Exchange. FINRA, on behalf of the Exchange, will communicate as needed regarding trading in the Shares, exchange-traded options, exchange-traded equities (including common stocks, exchange-

[48] 17 CFR 240.10A–3.

[49] FINRA surveils trading on the Exchange pursuant to a regulatory services agreement. The Exchange is responsible for FINRA's performance under this regulatory services agreement.

[50] For a list of the current members of ISG, *see www.isgportal.org*. The Exchange notes that not all components of the Disclosed Portfolio for the Fund may trade on markets that are members of ISG or with which the Exchange has in place a comprehensive surveillance sharing agreement.

[51] 15 U.S.C. 78f(b)(5).

traded investment companies, exchange-traded convertibles and preferred securities, exchange-traded REITs, and exchange-traded structured products, including ETNs), futures and options on futures with other markets or other entities that are members of the ISG, and FINRA may obtain trading information regarding trading in the Shares, exchange-traded options, exchange-traded equities, futures and options on futures from such markets or entities. In addition, the Exchange may obtain information regarding trading in the Shares, exchange-traded options, exchange-traded equities, futures and options on futures from markets or other entities that are members of ISG or with which the Exchange has in place a comprehensive surveillance sharing agreement. FINRA, on behalf of the Exchange, is able to access, as needed, trade information for certain fixed income securities held by the Fund reported to FINRA's TRACE. FINRA also can access data obtained from the Municipal Securities Rulemaking Board relating to municipal bond trading activity for surveillance purposes in connection with trading in the Shares. While emerging markets corporate debt securities (excluding commercial paper) generally must have $200 million or more par amount outstanding and significant par value traded to be considered as an eligible investment for the Fund, at least 80% of issues of such securities held by the Fund must have $200 million or more par amount outstanding at the time of investment. Furthermore, not more than 10% of the net assets of the Fund in the aggregate invested in equity securities (other than non-exchange-traded investment company securities) shall consist of equity securities, including stocks into which a convertible security is converted, whose principal market is not a member of the ISG or is a market with which the Exchange does not have a comprehensive surveillance sharing agreement. Furthermore, not more than 10% of the net assets of the Fund in the aggregate invested in futures contracts or exchange-traded options contracts shall consist of futures contracts or exchange-traded options contracts whose principal market is not a member of ISG or is a market with which the Exchange does not have a comprehensive surveillance sharing agreement.

The Fund's investments, including derivatives, will be consistent with the Fund's investment objective and the Fund's use of derivatives may be used to enhance leverage. However, the Fund's investments will not be used to seek performance that is the multiple or inverse multiple (*i.e.,* 2Xs and 3Xs) of the Fund's broad-based securities market index (as defined in Form N–1A). The Fund's investments will be subject to all of the restrictions under the 1940 Act, including restrictions with respect to investments in illiquid assets, that is, the limitation that a fund may hold up to an aggregate amount of 15% of its net assets in illiquid assets (calculated at the time of investment), including Rule 144A securities deemed illiquid by the Adviser. PIMCO's Counterparty Risk Committee will evaluate the creditworthiness of swaps counterparties on an ongoing basis.

The proposed rule change is designed to promote just and equitable principles of trade and to protect investors and the public interest in that the Exchange will obtain a representation from the issuer of the Shares that the NAV per Share will be calculated daily and that the NAV and the Disclosed Portfolio will be made available to all market participants at the same time. In addition, a large amount of information is publicly available regarding the Fund and the Shares, thereby promoting market transparency. Moreover, the PIV will be widely disseminated by one or more major market data vendors at least every 15 seconds during the Exchange's Core Trading Session. On each Business Day, before commencement of trading in Shares in the Core Trading Session on the Exchange, the Fund will disclose on the Trust's Web site the Disclosed Portfolio that will form the basis for the Fund's calculation of NAV at the end of the Business Day. Information regarding market price and trading volume of the Shares will be continually available on a real-time basis throughout the day on brokers' computer screens and other electronic services, and quotation and last sale information will be available via the CTA high-speed line. Exchange-traded options quotation and last sale information for options cleared via the OCC is available OPRA. Price information for the debt securities and other financial instruments held by the Fund, including the intra-day closing settlement price for the Fixed Income Instruments, including Municipal Bonds, and derivatives thereon, and other financial instruments held by the Fund, will be available through major market data vendors. The Fund's investments, including derivatives, will be consistent with the Fund's investment objective. The Trust's Web site will include a form of the prospectus for the Fund and additional data relating to NAV and other applicable quantitative information. Moreover, prior to the commencement of trading, the Exchange will inform its ETP Holders in an Information Bulletin of the special characteristics and risks associated with trading the Shares. Trading in Shares of the Fund will be halted if the circuit breaker parameters in NYSE Arca Equities Rule 7.12 have been reached or because of market conditions or for reasons that, in the view of the Exchange, make trading in the Shares inadvisable, and trading in the Shares will be subject to NYSE Arca Equities Rule 8.600(d)(2)(D), which sets forth circumstances under which Shares of the Fund may be halted. In addition, as noted above, investors will have ready access to information regarding the Fund's holdings, the PIV, the Disclosed Portfolio, and quotation and last sale information for the Shares.

The proposed rule change is designed to perfect the mechanism of a free and open market and, in general, to protect investors and the public interest in that it will facilitate the listing and trading of an additional type of actively-managed exchange-traded product that will enhance competition among market participants, to the benefit of investors and the marketplace. As noted above, the Exchange has in place surveillance procedures relating to trading in the Shares and may obtain information via ISG from other exchanges that are members of ISG or with which the Exchange has entered into a comprehensive surveillance sharing agreement. The Adviser is not a broker-dealer but is affiliated with a broker-dealer and has implemented a ''fire wall'' with respect to such broker-dealer regarding access to information concerning the composition and/or changes to the Fund's portfolio. In addition, the Fund's Reporting Authority will implement and maintain, or be subject to, procedures designed to prevent the use and dissemination of material non-public information regarding the actual components of the Fund's portfolio.

B. Self-Regulatory Organization's Statement on Burden on Competition

The Exchange does not believe that the proposed rule change will impose any burden on competition that is not necessary or appropriate in furtherance of the purpose of the Act. The Exchange notes that the proposed rule change will facilitate the listing and trading of an additional type of actively-managed exchange-traded product that, under normal circumstances, will invest principally in fixed income securities and that will enhance competition with respect to such products among market

participants, to the benefit of investors and the marketplace.

C. Self-Regulatory Organization's Statement on Comments on the Proposed Rule Change Received From Members, Participants, or Others

No written comments were solicited or received with respect to the proposed rule change.

III. Date of Effectiveness of the Proposed Rule Change and Timing for Commission Action

Within 45 days of the date of publication of this notice in the **Federal Register** or within such longer period up to 90 days (i) as the Commission may designate if it finds such longer period to be appropriate and publishes its reasons for so finding or (ii) as to which the self-regulatory organization consents, the Commission will:

(A) By order approve or disapprove the proposed rule change, or

(B) institute proceedings to determine whether the proposed rule change should be disapproved.

IV. Solicitation of Comments

Interested persons are invited to submit written data, views, and arguments concerning the foregoing, including whether the proposed rule change is consistent with the Act. Comments may be submitted by any of the following methods:

Electronic Comments

- Use the Commission's Internet comment form (*http://www.sec.gov/rules/sro.shtml*); or
- Send an email to *rule-comments@sec.gov.* Please include File Number SR–NYSEArca–2014–85 on the subject line.

Paper Comments

- Send paper comments in triplicate to Secretary, Securities and Exchange Commission, 100 F Street NE., Washington, DC 20549–1090.

All submissions should refer to File Number SR–NYSEArca–2014–85. This file number should be included on the subject line if email is used. To help the Commission process and review your comments more efficiently, please use only one method. The Commission will post all comments on the Commission's Internet Web site (*http://www.sec.gov/rules/sro.shtml*). Copies of the submission, all subsequent amendments, all written statements with respect to the proposed rule change that are filed with the Commission, and all written communications relating to the proposed rule change between the Commission and any person, other than those that may be withheld from the public in accordance with the provisions of 5 U.S.C. 552, will be available for Web site viewing and printing in the Commission's Public Reference Room, 100 F Street NE., Washington, DC 20549, on official business days between the hours of 10:00 a.m. and 3:00 p.m. Copies of such filing will also be available for inspection and copying at the principal office of the Exchange. All comments received will be posted without change; the Commission does not edit personal identifying information from submissions. You should submit only information that you wish to make available publicly. All submissions should refer to File Number SR–NYSEArca–2014–85 and should be submitted on or before December 5, 2014.

For the Commission, by the Division of Trading and Markets, pursuant to delegated authority.[52]

Kevin M. O'Neill,

Deputy Secretary.

[FR Doc. 2014–26944 Filed 11–13–14; 8:45 am]

BILLING CODE 8011–01–P

[52] 17 CFR 200.30–3(a)(12).

SECURITIES AND EXCHANGE COMMISSION

[Release No. 34–73563; File No. SR–EDGX–2014–26]

Self-Regulatory Organizations; EDGX Exchange, Inc.; Notice of Filing and Immediate Effectiveness of a Proposed Rule Change Related to Fees for Use of EDGX Exchange, Inc.

November 7, 2014.

Pursuant to Section 19(b)(1) of the Securities Exchange Act of 1934 (the ''Act''),[1] and Rule 19b–4 thereunder,[2] notice is hereby given that on October 31, 2014, EDGX Exchange, Inc. (the ''Exchange'' or ''EDGX'') filed with the Securities and Exchange Commission (''Commission'') the proposed rule change as described in Items I, II and III below, which Items have been prepared by the Exchange. The Exchange has designated the proposed rule change as one establishing or changing a member due, fee, or other charge imposed by the Exchange under Section 19(b)(3)(A)(ii) of the Act[3] and Rule 19b–4(f)(2) thereunder,[4] which renders the proposed rule change effective upon filing with the Commission. The Commission is publishing this notice to solicit comments on the proposed rule change from interested persons.

I. Self-Regulatory Organization's Statement of the Terms of Substance of the Proposed Rule Change

The Exchange filed a proposal to amend the fee schedule applicable to Members[5] and non-members of the Exchange pursuant to EDGX Rules 15.1(a) and (c). Changes to the fee schedule pursuant to this proposal are effective upon filing.

The text of the proposed rule change is available at the Exchange's Web site at *http://www.directedge.com,* at the principal office of the Exchange, and at the Commission's Public Reference Room.

II. Self-Regulatory Organization's Statement of the Purpose of, and Statutory Basis for, the Proposed Rule Change

In its filing with the Commission, the Exchange included statements concerning the purpose of and basis for the proposed rule change and discussed any comments it received on the proposed rule change. The text of these statements may be examined at the places specified in Item IV below. The Exchange has prepared summaries, set forth in Sections A, B, and C below, of the most significant parts of such statements.

A. Self-Regulatory Organization's Statement of the Purpose of, and the Statutory Basis for, the Proposed Rule Change

1. Purpose

The Exchange proposes to amend its Fee Schedule to decrease the fee for orders yielding Flag K, which routes to PSX using ROUC or ROUE routing strategies. In securities priced at or above $1.00, the Exchange currently assesses a fee of $0.0026 per share for Members' orders that yield Flag K. The Exchange proposes to amend its Fee Schedule to decrease this fee to $0.0024 per share from $0.0026 per share. The proposed change represents a pass through of the rate that Direct Edge ECN LLC (d/b/a DE Route) (''DE Route''), the Exchange's affiliated routing broker-dealer, is charged for routing orders to PSX when it does not qualify for a volume tiered reduced fee. The proposed change is in response to PSX's

[1] 15 U.S.C. 78s(b)(1).

[2] 17 CFR 240.19b–4.

[3] 15 U.S.C. 78s(b)(3)(A)(ii).

[4] 17 CFR 240.19b–4(f)(2).

[5] The term ''Member'' is defined as ''any registered broker or dealer, or any person associated with a registered broker or dealer, that has been admitted to membership in the Exchange. A Member will have the status of a ''member'' of the Exchange as that term is defined in Section 3(a)(3) of the Act.'' *See* Exchange Rule 1.5(n).

November 2014 fee change where PSX decreased the fee to remove liquidity via routable order types it charges its customers, from a fee of $0.0026 per share to a fee of $0.0024 per share.[6] When DE Route routes to PSX, it will now be charged a standard rate of $0.0024 per share.[7] DE Route will pass through this rate on PSX to the Exchange and the Exchange, in turn, will pass through this rate to its Members. The Exchange proposes to implement this amendment to its Fee Schedule on November 3, 2014.

2. Statutory Basis

The Exchange believes that the proposed rule change is consistent with the objectives of Section 6 of the Act,[8] in general, and furthers the objectives of Section 6(b)(4),[9] in particular, as it is designed to provide for the equitable allocation of reasonable dues, fees and other charges among its Members and other persons using its facilities. The Exchange believes that its proposal to decrease the pass through fee for Members' orders that yield Flag K from $0.0026 per share to $0.0024 per share represents an equitable allocation of reasonable dues, fees, and other charges among Members and other persons using its facilities because the Exchange does not levy additional fees or offer additional rebates for orders that it routes to PSX through DE Route. Prior to PSX's November 2014 fee change, PSX charged its members, which includes DE Route, a fee of $0.0026 per share to remove liquidity using non-routable order types, which DE Route passed through to the Exchange and the Exchange charged to its Members. In November 2014, PSX decreased this fee from $0.0026 per share to $0.0024 per share.[10] Therefore, the Exchange believes that its proposal to pass through a fee of $0.0024 per share for orders that yield Flag K is equitable and reasonable because it accounts for the pricing changes on PSX. In addition, the proposal allows the Exchange to charge its Members a pass-through rate for orders that are routed to PSX. Furthermore, the Exchange notes that routing through DE Route is voluntary. Lastly, the Exchange also believes that the proposed amendment is non-discriminatory because it applies uniformly to all Members.

B. Self-Regulatory Organization's Statement on Burden on Competition

These proposed rule changes do not impose any burden on competition that is not necessary or appropriate in furtherance of the purposes of the Act. The Exchange does not believe that any of these changes represent a significant departure from previous pricing offered by the Exchange or pricing offered by the Exchange's competitors. Additionally, Members may opt to disfavor EDGX's pricing if they believe that alternatives offer them better value. Accordingly, the Exchange does not believe that the proposed changes will impair the ability of Members or competing venues to maintain their competitive standing in the financial markets. The Exchange believes that its proposal to pass through a fee of $0.0024 per share for Members' orders that yield Flag K would increase intermarket competition because it offers customers an alternative means to route to PSX for the same price as entering orders on PSX directly. The Exchange believes that its proposal would not burden intramarket competition because the proposed rate would apply uniformly to all Members.

C. Self-Regulatory Organization's Statement on Comments on the Proposed Rule Change Received From Members, Participants, or Others

The Exchange has not solicited, and does not intend to solicit, comments on this proposed rule change. The Exchange has not received any unsolicited written comments from Members or other interested parties.

III. Date of Effectiveness of the Proposed Rule Change and Timing for Commission Action

The foregoing rule change has become effective pursuant to Section 19(b)(3)(A) of the Act[11] and paragraph (f) of Rule 19b–4 thereunder.[12] At any time within 60 days of the filing of the proposed rule change, the Commission summarily may temporarily suspend such rule change if it appears to the Commission that such action is necessary or appropriate in the public interest, for the protection of investors, or otherwise in furtherance of the purposes of the Act.

IV. Solicitation of Comments

Interested persons are invited to submit written data, views, and arguments concerning the foregoing, including whether the proposed rule change is consistent with the Act. Comments may be submitted by any of the following methods:

Electronic Comments

- Use the Commission's Internet comment form (*http://www.sec.gov/rules/sro.shtml*); or
- Send an email to *rule-comments@sec.gov*. Please include File Number SR–EDGX–2014–26 on the subject line.

Paper Comments

- Send paper comments in triplicate to Secretary, Securities and Exchange Commission, 100 F Street NE., Washington, DC 20549–1090.

All submissions should refer to File Number SR–EDGX–2014–26. This file number should be included on the subject line if email is used. To help the Commission process and review your comments more efficiently, please use only one method. The Commission will post all comments on the Commission's Internet Web site (*http://www.sec.gov/rules/sro.shtml).* Copies of the submission, all subsequent amendments, all written statements with respect to the proposed rule change that are filed with the Commission, and all written communications relating to the proposed rule change between the Commission and any person, other than those that may be withheld from the public in accordance with the provisions of 5 U.S.C. 552, will be available for Web site viewing and printing in the Commission's Public Reference Room, 100 F Street NE., Washington, DC 20549, on official business days between the hours of 10:00 a.m. and 3:00 p.m. Copies of the filing also will be available for inspection and copying at the principal office of the Exchange. All comments received will be posted without change; the Commission does not edit personal identifying information from submissions. You should submit only information that you wish to make available publicly. All submissions should refer to File Number SR–EDGX–2014–26, and should be submitted on or before December 5, 2014.

For the Commission, by the Division of Trading and Markets, pursuant to delegated authority.[13]

Kevin M. O'Neill,

Deputy Secretary.

[FR Doc. 2014–26950 Filed 11–13–14; 8:45 am]

BILLING CODE 8011–01–P

[6] *See* PSX, Equity Trader Alert 2014–95, Updates to PSX and BX Pricing for November 2014, dated October 27, 2014, available at *http://www.nasdaqtrader.com/MicroNews.aspx?id=ETA2014-95.*

[7] The Exchange notes that to the extent DE Route does or does not achieve any volume tiered reduced fee on PSX, its rate for Flag K will not change.

[8] 15 U.S.C. 78f.

[9] 15 U.S.C. 78f(b)(4).

[10] *See* supra *note 6.*

[11] 15 U.S.C. 78s(b)(3)(A).

[12] 17 CFR 240.19b–4(f).

[13] 17 CFR 200.30–3(a)(12).

DEPARTMENT OF STATE

[Public Notice: 8950]

Notice of Information Collection Under OMB Emergency Review: Affidavit of Relationship (AOR) for Minors From Honduras, El Salvador and Guatemala

ACTION: Notice of request for emergency OMB approval and public comment.

SUMMARY: The Department of State has submitted the information collection request described below to the Office of Management and Budget (OMB) for review and approval in accordance with the emergency review procedures of the Paperwork Reduction Act of 1995 (5 CFR 1320.13). The purpose of this notice is to allow for public comment from all interested individuals and organizations. Emergency review and approval of this collection has been requested from OMB by immediately. If granted, the emergency approval is only valid for 180 days. The Department plans to follow this emergency request with a submission for a 3 year approval through OMB's normal PRA clearance process (5 CFR 1320.10).

ADDRESSES: Direct any comments on this emergency request to the Department of State Desk Officer in the Office of Information and Regulatory Affairs at the Office of Management and Budget (OMB) and to PRM/Admissions.

All comments must be received by 10 days from publication of this Notice.

You may submit comments to OMB by the following methods:

- *Email: oira_submission@omb.eop.gov.* You must include the DS form number, information collection title, and OMB control number in the subject line of your message.
- *Fax:* 202–395–5806. Attention: Desk Officer for Department of State.

You may submit comments to PRM/Admissions by the following methods:

- *Web:* Persons with access to the Internet may use the Federal Docket Management System (FDMS) to comment on this notice by going to *www.Regulations.gov.* You can search for the document by entering ''Public Notice 8950'' in the Search bar. If necessary, use the Narrow by Agency filter option on the Results page.
- *Email:* PRM/Admissions (Sean Hantak: *hantaksr@state.gov*). You must include *Emergency Submission Comment on ''information collection title''* in the subject line of your message.
- *Regular Mail:* Send written comments to PRM/Admissions, 2901 C Street NW., Room 6825, Washington DC 20520.

You must include the DS form number (if applicable), information collection title, and OMB control number (if any) in any correspondence.

FOR FURTHER INFORMATION CONTACT: Direct requests for additional information regarding the collection listed in this notice, including requests for copies of the proposed collection instrument and supporting documents to Sean Hantak, PRM/Admissions, 2901 C Street NW., Rm 6825, Washington DC 20520 who may be reached at *hantaksr@state.gov.*

SUPPLEMENTARY INFORMATION:

Title of Information Collection: Affidavit of Relationship (AOR) for Minors from Honduras, El Salvador and Guatemala.

- *OMB Control Number:* ''None''.
- *Type of Request:* Emergency Review.
- *Originating Office:* PRM/A.
- *Form Number:* DS–7699.
- *Respondents:* Anchor parents in the U.S. with children in Honduras, El Salvador and Guatemala.
- *Estimated Number of Respondents:* 2,500.
- *Estimated Number of Responses:* 2,500.
- *Average Time per Response:* 60 minutes.
- *Total Estimated Burden Time:* 2,500 hours.
- *Frequency:* One time per form.
- *Obligation to respond:* Required to Obtain or Retain a Benefit.

We are soliciting public comments to permit the Department to:

- Evaluate whether the proposed information collection is necessary for the proper functions of the Department.
- Evaluate the accuracy of our estimate of the time and cost burden of this proposed collection, including the validity of the methodology and assumptions used.
- Enhance the quality, utility, and clarity of the information to be collected.
- Minimize the reporting burden on those who are to respond, including the use of automated collection techniques or other forms of information technology.

Please note that comments submitted in response to this Notice are public record. Before including any detailed personal information, you should be aware that your comments as submitted, including your personal information, will be available for public review

Abstract of proposed collection: The Department of State Bureau of Population, Refugees, and Migration (PRM) is responsible for coordinating and managing the U.S. Refugee Admissions Program (USRAP). PRM coordinates within the Department of State, as well as with the Department of Homeland Security's U.S. Citizenship and Immigration Services (DHS/USCIS), in carrying out this responsibility. A critical part of the State Department's responsibility is determining which individuals, from among millions of refugees worldwide, will have access to U.S. resettlement consideration. PRM and DHS/USCIS are now assisting with the preparation of a White House directive to initiate an in-country program to provide a means for certain persons in the United States who are lawfully present (''anchor parents'') to claim a relationship with child(ren) in Honduras, El Salvador, and Guatemala and to assist the U.S. Department of State in determining whether those child(ren) are qualified to apply for access to the USRAP for family reunification purposes. This form also assists DHS/USCIS to verify parent-child relationships during refugee case adjudication. The main purpose of the DS–7699 is for the anchor parent to provide biographical information about his/her child(ren) in the qualifying countries who may subsequently seek access to the USRAP for verification by the U.S. government.

Methodology: The collection of this information currently involves the limited use of electronic techniques. Anchor parents (respondents) in the United States will work closely with a resettlement agency during the completion of the AOR to ensure that the information is accurate. Anchor parents may visit any resettlement agency to complete an AOR. Sometimes anchors (respondents) do not have strong English-language skills and benefit from having a face-to-face meeting with resettlement agency staff. The collection instrument (DS–7699) will be available electronically and responses will be completed electronically. Completed AORs will be printed out for ink signature by the respondents as well. The electronic copy will be submitted electronically to the Refugee Processing Center (RPC) for downloading into the Worldwide Refugee Admission Processing System (WRAPS), with the signed paper copy remaining with PRM's Resettlement and Placement Agency partners. Within the next three years, however, it is anticipated that AORs will be submitted electronically only, with electronic signatures, by the resettlement agency to the RPC.

Dated: October 29, 2014.

Simon Henshaw

PDAS, Bureau of Population, Refugees and Migration, Department of State.

[FR Doc. 2014–27040 Filed 11–13–14; 8:45 am]

BILLING CODE 4710–33–P

DEPARTMENT OF STATE

[Public Notice 8948]

Notice of Preparation/Notice of Intent To Prepare an Environmental Impact Report/Environmental Impact Statement for the Otay Mesa Conveyance and Disinfection System Project

AGENCY: Department of State.

ACTION: Notice; solicitation of comments.

SUMMARY: The purpose of this Notice is to inform the public and interested federal, tribal, state, and local government entities that the Otay Water District (District) and the U.S. Department of State (DOS) intend to prepare a joint Environmental Impact Report/Environmental Impact Statement (EIR/EIS) for the Otay Mesa Conveyance and Disinfection System Project (proposed project). In November 2013, the District submitted an application to DOS for a Presidential Permit authorizing the construction, connection, operation, and maintenance of a cross-border pipeline facility for the proposed project, which would convey desalinated seawater from a new border crossing with Mexico approximately four miles northeast to the District's Roll Reservoir in San Diego County. This Notice of Preparation/Notice of Intent (NOP/NOI) informs the public about the proposed project and solicits participation and comments from interested federal, tribal, state, and local government entities and the public for consideration in establishing the scope and content of the EIR/EIS.

Project Description: The proposed project would entail construction of a potable water pipeline and associated facilities to convey desalinated sea water produced in Mexico into the District's service area in southern San Diego County, California. The scope of the proposed project for the purpose of environmental review pursuant to the California Environmental Quality Act (CEQA) and consistent with the National Environmental Policy Act (NEPA) is limited to the portion of the proposed project within the United States. The scope does not include the proposed desalination plant in Rosarito, Mexico or associated pipeline infrastructure in Mexico. Within the United States, the proposed project would involve the construction and operation of an approximately four-mile long (depending on the selected alternative) potable water pipeline with a set diameter of between 48 and 54 inches, and a metering station within the Otay Mesa area of the County of San Diego just north of the United States/Mexico border. Additionally, a pump station and/or disinfection facility may be constructed if needed.

The proposed project would enable the District to import and convey desalinated potable water from a connection point at the United States/Mexico border north to the District's existing Roll Reservoir. The proposed Mexican desalination plant (not a part of the proposed project) is envisioned to produce 100 million gallons per day (MGD) of desalinated sea water. The District intends to initially purchase approximately 20–25 MGD of desalinated sea water, and ultimately increase the amount to 50 MGD. Due to seasonal variation in demand, the District anticipates that 10 MGD would be conveyed in the winter months, and up to 50 MGD would be conveyed during peak demand periods in the summer months. Numerous alignment (routing) options were considered; however, after initial consideration of environmental and engineering opportunities and constraints, the District has chosen three alternative alignments considered the most feasible, and will address those alignments in the EIR/EIS.

The District will be responsible for approving the expenditure of public funds for the proposed project and DOS will be responsible for determining whether the proposed project serves the national interest pursuant to Executive Order 13337, and if so, issuing a Presidential Permit authorizing the construction, connection, operation, and maintenance of the cross-border pipeline facility.

Project Location: The proposed project is generally located in the southwestern portion of San Diego County, in the community of Otay Mesa, immediately adjacent to the United States/Mexico border, east of Interstate 5, Interstate 805 and State Route 125. More specifically, the proposed project is located within the East Otay Mesa Specific Plan, which lies between the Otay River Valley to the north, United States/Mexico border to the south, San Ysidro Mountains to the east, and City of San Diego Otay Mesa Community Plan Area to the west.

Probable Environmental Effects: The District will be the CEQA Lead Agency and the DOS will be the federal lead agency for the environmental review of the proposed project. The District and DOS are jointly reviewing the proposed project pursuant to CEQA and consistent with NEPA, respectively, and will prepare a joint EIR/EIS to identify and assess potential environmental impacts, mitigation measures, and alternatives associated with the proposed project. The District and DOS have determined that an EIR/EIS is the appropriate environmental document for the proposed project because there is substantial evidence that some aspects of the proposed project individually or cumulatively may have a significant effect on the human environment. The EIR/EIS will identify the purpose and need for the proposed project, the affected environment, project alternatives (including the no action alternative), impacts of the project alternatives, and proposed mitigation measures. Environmental issues that may require detailed analysis include, but are not necessarily limited to, the following: Air quality, biological resources, cultural resources, geology and soils, greenhouse gas emissions (GHG), hazards and hazardous materials, hydrology and water quality, noise, socioeconomics/environmental justice, and transportation/traffic. Based on the preliminary scope of the proposed project, technical studies are expected to be prepared for the following issues: Air quality/GHG, biological resources, cultural resources, geology/soils, hazardous materials, hydrology and water quality, noise, and traffic.

Scoping Period: The District and DOS have issued this NOP/NOI, and are seeking review and comments within 30 days from relevant federal, tribal, state, and local government entities, interested parties, and the public about the scope of the EIR/EIS, alternatives and analyses, pursuant to CEQA Section 21153(a); California Code of Regulations, Title 14, section 15082(a) and 15083; and consistent with the National Environmental Policy Act of 1969 (as implemented by the Council on Environmental Quality Regulations found at 40 CFR 1500–1508). The comment period for the NOP/NOI begins on November 14, 2014 and ends on December 14, 2014.

A copy of this NOP/NOI is available on the proposed project's Web site: *www.owd-desalconveyance.com*. The California Office of Planning and Research is responsible for coordinating state-level review of the CEQA/NEPA document. Additionally, DOS will publish the NOP/NOI in the **Federal Register** pursuant to CEQ Regulations, Sections 1501.7 and 1508.22. Once the

NOP/NOI is published in the **Federal Register**, the 30-day scoping/comment period begins consistent with NEPA. The District and DOS will also undertake any consultations required by applicable laws or regulations, including the National Historic Preservation Act (16 U.S.C. 470, et seq.).

All comments in response to the NOP/NOI must be submitted by December 14, 2014. Comments may be submitted at *www.regulations.gov* by entering the title of this Notice into the search field and following the prompts. Comments may also be submitted by mail at the address below. All comments from agencies or organizations should indicate a contact person for each agency or organization, if applicable.

All comments received during the scoping period may be made public, no matter how initially submitted. Comments are not private and will not be edited to remove identifying or contact information. Commenters are cautioned against including any information that they would not want publicly disclosed. Any party soliciting or aggregating comments from other persons is further requested to direct those persons not to include any identifying or contact information, or information they would not want publicly disclosed, in their comments.

Public Scoping Meeting: A public scoping meeting regarding the EIR/EIS will be held from 5:00 p.m. to 8:00 p.m. on Tuesday, December 2, 2014 at the Otay Water District Board Room, located at 2554 Sweetwater Springs Blvd., Spring Valley, CA 91978. Cooperating and Responsible Agencies, as well as any interested agencies, organizations, and members of the public are invited to attend.

ADDRESSES: Written comments should be addressed to: Ms. Jill Reilly, U.S. Department of State, 2201 C Street NW., Room 2726, Washington, DC 20520. As described above, comments are not private.

FOR FURTHER INFORMATION CONTACT: Project details on the Otay Mesa Conveyance and Disinfection System Project application for a new Presidential Permit, as well as information on the Presidential Permit process, are available on the following Web site: *http://www.state.gov/e/enr/applicant/applicants/*. Please refer to this Web site or contact Ms. Jill Reilly at the address listed in the **ADDRESSES** section of this notice.

Dated: November 14, 2014.

Deborah Klepp,

Director, Office of Environmental Quality and Transboundary Issues, Department of State.

[FR Doc. 2014–27003 Filed 11–13–14; 8:45 a.m.]

BILLING CODE 4710–09–P

DEPARTMENT OF STATE

[Public Notice: 8949]

Executive Order 11423, as Amended; Notice of Receipt of Application for a Presidential Permit for the Columbus Land Port of Entry Replacement Facility on the U.S.-Mexico Border at Columbus, New Mexico, and Palomas, Chihuahua, Mexico

AGENCY: Department of State.

ACTION: Notice.

SUMMARY: The Department of State hereby gives notice that, on September 24, 2014, it received an application for a Presidential Permit to replace and expand the Columbus Land Port of Entry (LPOE) on the U.S.-Mexico Border at Columbus, New Mexico, and Palomas, Chihuahua, Mexico. The United States General Services Administration (GSA) filed this application. The Department of State's jurisdiction over this application is based upon Executive Order 11423 of August 16, 1968, as amended. As provided in E.O. 11423, the Department is circulating this application to relevant federal agencies for review and comment. Under E.O. 11423, the Department has the responsibility to determine, taking into account input from these agencies and other stakeholders, whether issuance of a Presidential Permit for the proposed replacement and expansion of this border crossing would serve the national interest. Interested members of the public are invited to submit written comments regarding this application on or before December 15, 2014 to the U.S.-Mexico Border Affairs Office, via email at *WHA-BorderAffairs@state.gov* or by mail at WHA/MEX—Room 3924, Department of State, 2201 C St. NW., Washington, DC 20520.

FOR FURTHER INFORMATION CONTACT: U.S.-Mexico Border Affairs Office, via email at *WHA-BorderAffairs@state.gov;* by phone at 202–647–9894; or by mail at WHA/MEX—Room 3924, Department of State, 2201 C St. NW., Washington, DC 20520.

SUPPLEMENTARY INFORMATION: The application and supporting documents are available for review in the Office of Mexican Affairs, Border Affairs Unit, Department of State, during normal business hours.

Dated: November 7, 2014.

Robin Matthewman,

Director, Office of Mexican Affairs, Department of State.

[FR Doc. 2014–27012 Filed 11–13–14; 8:45 am]

BILLING CODE 4710–29–P

DEPARTMENT OF TRANSPORTATION

Global Positioning System Adjacent Band Compatibility Assessment Workshop II

AGENCY: Office of the Assistant Secretary for Research and Technology, Department of Transportation.

ACTION: Notice of meeting.

SUMMARY: The purpose of this notice is to inform the public that the U.S. Department of Transportation will host a second workshop to continue discussions of the Global Positioning System (GPS) Adjacent Band Compatibility Assessment (the first workshop was held on September 18, 2014, in Cambridge, MA). The workshop will focus on the following topics: (i) GPS ''use case'' information, with emphasis on non-Government applications; (ii) identification of current GPS receivers which are representative of the current categories of GPS applications and which should be considered for sensitivity testing; and (iii) feedback on the GPS Adjacent Band Compatibility Assessment program implementation plan presented during the last workshop. To maximize participation and discussion, the U.S. Department of Transportation is requesting that those interested in presenting on one (or all) of the above topics please contact Stephen Mackey (contact information listed below) by November 20, 2014.

This workshop is open to the general public by registration only. For those who would like to attend the workshop, we request that you register no later than November 20, 2014. Please use the following link to register: *https://volpecenterevents.webex.com/volpecenterevents/onstage/g.php?d=660350730&t=a*

You must include:

- Name
- Organization
- Telephone number
- Mailing and email addresses
- Attendance method (WebEx or on site)
- Country of citizenship
- Intend to present (Yes/No)
  - If Yes, topic and title

The U.S. Department of Transportation is committed to providing equal access to this workshop

for all participants. If you need alternative formats or services because of a disability, please contact Stephen Mackey (contact information listed below) with your request by close of business November 20, 2014.

DATES: *Date/Time:* December 4, 2014 10 a.m.–5 p.m. (Pacific Standard Time).

Location: Aerospace Corporation, 2310 E. El Segundo Blvd. El Segundo, CA 90245.

Identification will be required at the entrance of Aerospace Corporation facility (Passport, state ID, or Federal ID). Several Days leading up to the workshop, an email containing the Agenda, Dial-in, and WebEx information will be provided.

FOR FURTHER INFORMATION CONTACT: Stephen M. Mackey, U.S. Department of Transportation, John A. Volpe National Transportation Systems Center, RVT–75, Cambridge, MA 02142

Stephen.Mackey@dot.gov Telephone: 617–494–2753

Issued in Washington, DC, on November 4, 2014.

Gregory D. Winfree,

Assistant Secretary for Research and Technology.

[FR Doc. 2014–26974 Filed 11–13–14; 8:45 am]

BILLING CODE 4910–9X–P

DEPARTMENT OF TRANSPORTATION

Federal Aviation Administration

[Summary Notice No. PE–2014–126]

Petition for Exemption; Summary of Petition Received

AGENCY: Federal Aviation Administration (FAA), DOT.

ACTION: Notice of petition for exemption received.

SUMMARY: This notice contains a summary of a petition seeking relief from specified requirements of 14 CFR. The purpose of this notice is to improve the public's awareness of, and participation in, this aspect of FAA's regulatory activities. Neither publication of this notice nor the inclusion or omission of information in the summary is intended to affect the legal status of the petition or its final disposition.

DATES: Comments on this petition must identify the petition docket number and must be received on or before December 4, 2014.

ADDRESSES: You may send comments identified by Docket Number FAA–2014–0856 using any of the following methods:

- *Government-wide rulemaking Web site:* Go to *http://www.regulations.gov* and follow the instructions for sending your comments electronically.
- *Mail:* Send comments to the Docket Management Facility; U.S. Department of Transportation, 1200 New Jersey Avenue SE., West Building Ground Floor, Room W12–140, Washington, DC 20590.
- *Fax:* Fax comments to the Docket Management Facility at 202–493–2251.
- *Hand Delivery:* Bring comments to the Docket Management Facility in Room W12–140 of the West Building Ground Floor at 1200 New Jersey Avenue SE., Washington, DC, between 9 a.m. and 5 p.m., Monday through Friday, except Federal holidays.

Privacy: We will post all comments we receive, without change, to *http://www.regulations.gov,* including any personal information you provide. Using the search function of our docket Web site, anyone can find and read the comments received into any of our dockets, including the name of the individual sending the comment (or signing the comment for an association, business, labor union, etc.). You may review DOT's complete Privacy Act Statement in the **Federal Register** published on April 11, 2000 (65 FR 19477–78).

Docket: To read background documents or comments received, go to *http://www.regulations.gov* at any time or to the Docket Management Facility in Room W12–140 of the West Building Ground Floor at 1200 New Jersey Avenue SE., Washington, DC, between 9 a.m. and 5 p.m., Monday through Friday, except Federal holidays.

FOR FURTHER INFORMATION CONTACT: Jake Troutman, (202) 267–9521, 800 Independence Avenue SW., Washington, DC, 20951.

This notice is published pursuant to 14 CFR 11.85.

Issued in Washington, DC, on November 6, 2014.

James M. Crotty,

Acting Director, Office of Rulemaking.

Petition for Exemption

Docket No.: FAA–2014–0856.

Petitioner: State Farm Mutual Automobile Insurance Company.

Section of 14 CFR: part 21 Subpart H, 21.191(a), 45.23(b), 45.27, 61.113(a) and (b), 91.119(c), 91.121, 91.151(a), 91.405(a), 91.407(a)(1), 91.409(a)(1) and (2), and 91.417(a) and (b).

Description of Relief Sought: The petitioner is requesting relief to commercially operate their small unmanned aircraft systems (sUAS) for outdoor research and development related to use of UAS for civil operations for insurance functions including: Using imagery and analytics in underwriting; re-underwriting; catastrophe response; roof inspection, and claim resolutions settings.

[FR Doc. 2014–26873 Filed 11–13–14; 8:45 am]

BILLING CODE 4910–13–P

TREASURY DEPARTMENT

Office of Foreign Assets Control

Additional Designations, Foreign Narcotics Kingpin Designation Act

AGENCY: Office of Foreign Assets Control, Treasury.

ACTION: Notice.

SUMMARY: The U.S. Department of the Treasury's Office of Foreign Assets Control (OFAC) is publishing the names of 2 individuals and 1 entity whose property and interests in property have been blocked pursuant to the Foreign Narcotics Kingpin Designation Act (Kingpin Act) (21 U.S.C. 1901–1908, 8 U.S.C. 1182).

DATES: The designation by the Director of OFAC of the 2 individuals and 1 entity identified in this notice pursuant to section 805(b) of the Kingpin Act is effective on November 6, 2014.

FOR FURTHER INFORMATION CONTACT: Assistant Director, Sanctions Compliance & Evaluation, Office of Foreign Assets Control, U.S. Department of the Treasury, Washington, DC 20220, Tel: (202) 622–2490.

SUPPLEMENTARY INFORMATION:

Electronic and Facsimile Availability

This document and additional information concerning OFAC are available on OFAC's Web site at *http://www.treasury.gov/ofac* or via facsimile through a 24-hour fax-on-demand service at (202) 622–0077.

Background

The Kingpin Act became law on December 3, 1999. The Kingpin Act establishes a program targeting the activities of significant foreign narcotics traffickers and their organizations on a worldwide basis. It provides a statutory framework for the imposition of sanctions against significant foreign narcotics traffickers and their organizations on a worldwide basis, with the objective of denying their businesses and agents access to the U.S. financial system and the benefits of trade and transactions involving U.S. companies and individuals.

The Kingpin Act blocks all property and interests in property, subject to U.S. jurisdiction, owned or controlled by significant foreign narcotics traffickers

as identified by the President. In addition, the Secretary of the Treasury, in consultation with the Attorney General, the Director of the Central Intelligence Agency, the Director of the Federal Bureau of Investigation, the Administrator of the Drug Enforcement Administration, the Secretary of Defense, the Secretary of State, and the Secretary of Homeland Security may designate and block the property and interests in property, subject to U.S. jurisdiction, of persons who are found to be: (1) Materially assisting in, or providing financial or technological support for or to, or providing goods or services in support of, the international narcotics trafficking activities of a person designated pursuant to the Kingpin Act; (2) owned, controlled, or directed by, or acting for or on behalf of, a person designated pursuant to the Kingpin Act; or (3) playing a significant role in international narcotics trafficking.

On November 6, 2014, the Director of OFAC designated the following 2 individuals and 1 entity whose property and interests in property are blocked pursuant to section 805(b) of the Kingpin Act.

Individuals

1. PEREZ OCAMPO, German Alberto (a.k.a. ORTIZ ESPINEL, Gustavo Adolfo), CL34E9115, Medellin, Colombia; DOB 14 Jun 1965; alt. DOB 12 Jun 1971; citizen Colombia; Cedula No. 16361849 (Colombia); alt. Cedula No. 79183678 (Colombia) (individual) [SDNTK] (Linked To: COMPRA VENTA GERPEZ).

2. PEREZ OCAMPO, Santiago (a.k.a. ORTIZ ESPINEL, Juan Jose), Subasta Santa Clara, Sahagun, Colombia; DOB 15 Nov 1956; alt. DOB 10 May 1961; POB Andinapolis, Trujillo, Valle, Colombia; citizen Colombia; Cedula No. 16351833 (Colombia); alt. Cedula No. 294885 (Colombia) (individual) [SDNTK].

Entity

1. COMPRA VENTA GERPEZ, Calle 22, #24–28, Tulua, Valle, Colombia; Matricula Mercantil No 10375–1 (Colombia) [SDNTK].

Dated: November 6, 2014.

John E. Smith,

Acting Director, Office of Foreign Assets Control.

[FR Doc. 2014–26976 Filed 11–13–14; 8:45 am]

BILLING CODE 4810–AL–P

Reader Aids

Federal Register

Vol. 79, No. 220

Friday, November 14, 2014

CUSTOMER SERVICE AND INFORMATION

Federal Register/Code of Federal Regulations	
General Information, indexes and other finding aids	**202–741–6000**
Laws	**741–6000**
Presidential Documents	
Executive orders and proclamations	**741–6000**
The United States Government Manual	**741–6000**
Other Services	
Electronic and on-line services (voice)	**741–6020**
Privacy Act Compilation	**741–6064**
Public Laws Update Service (numbers, dates, etc.)	**741–6043**
TTY for the deaf-and-hard-of-hearing	**741–6086**

ELECTRONIC RESEARCH

World Wide Web

Full text of the daily Federal Register, CFR and other publications is located at: **www.fdsys.gov.**

Federal Register information and research tools, including Public Inspection List, indexes, and Code of Federal Regulations are located at: **www.ofr.gov.**

E-mail

FEDREGTOC-L (Federal Register Table of Contents LISTSERV) is an open e-mail service that provides subscribers with a digital form of the Federal Register Table of Contents. The digital form of the Federal Register Table of Contents includes HTML and PDF links to the full text of each document.

To join or leave, go to **http://listserv.access.gpo.gov** and select *Online mailing list archives, FEDREGTOC-L, Join or leave the list (or change settings);* then follow the instructions.

PENS (Public Law Electronic Notification Service) is an e-mail service that notifies subscribers of recently enacted laws.

To subscribe, go to **http://listserv.gsa.gov/archives/publaws-l.html** and select *Join or leave the list (or change settings);* then follow the instructions.

FEDREGTOC-L and **PENS** are mailing lists only. We cannot respond to specific inquiries.

Reference questions. Send questions and comments about the Federal Register system to: **fedreg.info@nara.gov**

The Federal Register staff cannot interpret specific documents or regulations.

CFR Checklist. Effective January 1, 2009, the CFR Checklist no longer appears in the Federal Register. This information can be found online at **http://bookstore.gpo.gov/.**

FEDERAL REGISTER PAGES AND DATE, NOVEMBER

65139–65326 3
65327–65540 4
65541–65862 5
65863–66266 6
66267–66590 7
66591–67034 10
67035–67308 12
67309–68092 13
68093–68348 14

CFR PARTS AFFECTED DURING NOVEMBER

At the end of each month the Office of the Federal Register publishes separately a List of CFR Sections Affected (LSA), which lists parts and sections affected by documents published since the revision date of each title.

1 CFR

51 66267

3 CFR

Proclamations:
9199 65855
9200 65857
9201 65859
9202 65861
9203 65863
9204 65865
9205 65867
9206 65869
9207 65871
9208 67309
9209 67311

Administrative Orders:
Notice of November 7, 2014 67035
Notice of November 12, 2014 68091

5 CFR

843 66278
1630 68093
1631 68093
3101 65873

Proposed Rules:
875 67377

7 CFR

27 67313
28 67313
29 67313
51 67313
52 67313
54 67313
56 67313
58 67313
62 67313
70 67313
75 67313
91 67313
915 67037
944 67037
945 67039
1206 67041
1470 65836

Proposed Rules:
1208 67103

9 CFR

78 66591

10 CFR

2 66598
15 66598
19 66598
20 66598
26 66598
30 66598
40 66598
50 .....65541, 65776, 66598
51 66598
52 66598
55 66598
60 66598
61 66598
63 66598
70 66598
71 66598
72 66598
73 66598
76 66598
429 65351
430 65351
590 65541

Proposed Rules:
50 65603
429 66338
430 65603
460 65909

11 CFR

Proposed Rules:
110 68137

12 CFR

Ch. II 67326
234 65543
251 68095
1026 65300

Proposed Rules:
704 65353

13 CFR

Proposed Rules:
Ch. I 66342

14 CFR

Ch. I 66282
25 .....65508, 65562, 65879, 68107
33 65508
39 .....65879, 65885, 65887, 65891, 66280, 67042, 67044, 67048, 67052, 67340, 67343, 68108
43 67054
61 67346
71 .....65894, 68111
121 67346
135 65139
145 66607
1260 67347

Proposed Rules:
33 68137
39 .....66343, 67379, 67382
121 65360
145 65360
1251 67384

15 CFR

734 67055

740 67055
744 66288
748 67055
758 67055
774 67055
902 65327

17 CFR

232 66607
249 66607
Proposed Rules:
1 ....68140, 68148

20 CFR

404 67349

21 CFR

5 68114
10 68114
14 68114
20 68114
21 68114
314 68114
350 68114
516 68114
814 68114
Proposed Rules:
573 65909
888 67105

22 CFR

121 66608
123 66608
125 66608
126 ....66608, 66615
181 68116

24 CFR

203 65140

25 CFR

Proposed Rules:
169 65360

26 CFR

1 ....65142, 66616, 67059, 67350
801 67351
Proposed Rules:
1 65151
801 67396

28 CFR

Proposed Rules:
58 66659

29 CFR

2520 66617
4022 68116

30 CFR

Proposed Rules:
100 66345
924 67115
948 67396
950 67116

32 CFR

311 66290
706 ....68118, 68119

33 CFR

100 67353
117 ....65142, 65339, 66621, 68120, 68121
165 ....65340, 65895, 66622, 67063, 67065, 67353
Proposed Rules:
110 65361

37 CFR

1 ....68121, 68124
Proposed Rules:
380 65609

38 CFR

12 68127
17 ....65571, 68130

39 CFR

601 65342
Proposed Rules:
3050 ....67118, 67119, 68151

40 CFR

22 65897
52 ....65143, 65346, 65587, 65589, 65901, 66291, 66626, 66641, 66651, 66654, 67068
63 67073
180 ....66294, 66302, 66305, 66308, 68131
300 65589
711 66655
Proposed Rules:
22 65910
52 ....65362, 65366, 66663, 66670, 67120, 67137, 67398
60 ....65482, 66346, 66512, 67406
63 ....66512, 67154, 68012, 68152
81 ....67120, 67137
82 66679
141 67408
171 68152
180 ....66347, 68153
300 65612
503 67409

41 CFR

Proposed Rules:
60 65613
61 65613

42 CFR

403 67548
405 ....66120, 67548
409 66032
410 67548
411 ....66120, 66770, 67548
412 ....66770, 67548
413 ....66120, 67548
414 ....66120, 67548
416 66770
419 66770
422 66770
423 66770
424 ....66032, 66770
425 67548
484 66032
488 66032
489 67548
495 67548
498 ....66032, 67548
Proposed Rules:
88 65369
493 66348

44 CFR

64 65148

45 CFR

1149 67079

46 CFR

30 68131
150 68131
153 68131

47 CFR

0 65906
1 65906
2 65906
4 65348
15 ....65906, 66312
20 68132
27 65906
73 ....65906, 67355
74 ....65350, 65906
Proposed Rules:
0 65371
1 ....65371, 68172
2 65371
15 65371
27 ....65371, 68172
73 65371
74 65371

48 CFR

212 65816
217 ....65592, 67356
219 67356
225 65816
234 65592
237 65592
252 ....65592, 65816
Proposed Rules:
202 65912
203 65912
205 65912
207 65912
211 65912
212 ....65912, 65917
215 65912
217 65912
218 65912
219 ....65912, 65917
225 65912
228 65912
234 65912
236 65912
237 65912
250 65912
252 ....65912, 65917

49 CFR

214 66460
232 66460
243 66460

50 CFR

17 67356
21 65595
216 65327
226 68042
300 ....66313, 67359, 68133
622 66316
635 68135
648 ....66323, 66324, 67090, 67362
660 ....67095, 68133
679 ....66324, 67102, 67376
Proposed Rules:
17 67154
229 65918
600 67411
622 67411
648 68202
697 65918

LIST OF PUBLIC LAWS

Note: No public bills which have become law were received by the Office of the Federal Register for inclusion in today's **List of Public Laws**.

Last List October 9, 2014

Public Laws Electronic Notification Service (PENS)

PENS is a free electronic mail notification service of newly enacted public laws. To subscribe, go to *http://listserv.gsa.gov/archives/publaws-l.html*

Note: This service is strictly for E-mail notification of new laws. The text of laws is not available through this service. **PENS** cannot respond to specific inquiries sent to this address.