AUTHENTICATED
U.S. GOVERNMENT
INFORMATION
GPO

FEDERAL REGISTER

Vol. 80 Monday,
No. 75 April 20, 2015

Pages 21639–22086

OFFICE OF THE FEDERAL REGISTER

The **FEDERAL REGISTER** (ISSN 0097–6326) is published daily, Monday through Friday, except official holidays, by the Office of the Federal Register, National Archives and Records Administration, Washington, DC 20408, under the Federal Register Act (44 U.S.C. Ch. 15) and the regulations of the Administrative Committee of the Federal Register (1 CFR Ch. I). The Superintendent of Documents, U.S. Government Publishing Office, Washington, DC 20402 is the exclusive distributor of the official edition. Periodicals postage is paid at Washington, DC.

The **FEDERAL REGISTER** provides a uniform system for making available to the public regulations and legal notices issued by Federal agencies. These include Presidential proclamations and Executive Orders, Federal agency documents having general applicability and legal effect, documents required to be published by act of Congress, and other Federal agency documents of public interest.

Documents are on file for public inspection in the Office of the Federal Register the day before they are published, unless the issuing agency requests earlier filing. For a list of documents currently on file for public inspection, see *www.ofr.gov.*

The seal of the National Archives and Records Administration authenticates the Federal Register as the official serial publication established under the Federal Register Act. Under 44 U.S.C. 1507, the contents of the **Federal Register** shall be judicially noticed.

The **Federal Register** is published in paper and on 24x microfiche. It is also available online at no charge at *www.fdsys.gov*, a service of the U.S. Government Publishing Office.

The online edition of the **Federal Register** is issued under the authority of the Administrative Committee of the Federal Register as the official legal equivalent of the paper and microfiche editions (44 U.S.C. 4101 and 1 CFR 5.10). It is updated by 6:00 a.m. each day the **Federal Register** is published and includes both text and graphics from Volume 59, 1 (January 2, 1994) forward. For more information, contact the GPO Customer Contact Center, U.S. Government Publishing Office. Phone 202-512-1800 or 866-512-1800 (toll free). E-mail, *gpocusthelp.com.*

The annual subscription price for the **Federal Register** paper edition is $749 plus postage, or $808, plus postage, for a combined **Federal Register, Federal Register** Index and List of CFR Sections Affected (LSA) subscription; the microfiche edition of the **Federal Register** including the **Federal Register** Index and LSA is $165, plus postage. Six month subscriptions are available for one-half the annual rate. The prevailing postal rates will be applied to orders according to the delivery method requested. The price of a single copy of the daily **Federal Register,** including postage, is based on the number of pages: $11 for an issue containing less than 200 pages; $22 for an issue containing 200 to 400 pages; and $33 for an issue containing more than 400 pages. Single issues of the microfiche edition may be purchased for $3 per copy, including postage. Remit check or money order, made payable to the Superintendent of Documents, or charge to your GPO Deposit Account, VISA, MasterCard, American Express, or Discover. Mail to: U.S. Government Publishing Office—New Orders, P.O. Box 979050, St. Louis, MO 63197-9000; or call toll free 1-866-512-1800, DC area 202-512-1800; or go to the U.S. Government Online Bookstore site, see *bookstore.gpo.gov.*

There are no restrictions on the republication of material appearing in the **Federal Register.**

How To Cite This Publication: Use the volume number and the page number. Example: 80 FR 12345.

Postmaster: Send address changes to the Superintendent of Documents, Federal Register, U.S. Government Publishing Office, Washington, DC 20402, along with the entire mailing label from the last issue received.

SUBSCRIPTIONS AND COPIES

PUBLIC

Subscriptions:

Paper or fiche	**202–512–1800**
Assistance with public subscriptions	**202–512–1806**
General online information	**202–512–1530; 1–888–293–6498**

Single copies/back copies:

Paper or fiche	**202–512–1800**
Assistance with public single copies	**1–866–512–1800 (Toll-Free)**

FEDERAL AGENCIES

Subscriptions:

Assistance with Federal agency subscriptions:

Email	*FRSubscriptions@nara.gov*
Phone	**202–741–6000**

Printed on recycled paper.

Contents

Federal Register

Vol. 80, No. 75

Monday, April 20, 2015

Centers for Medicare & Medicaid Services
PROPOSED RULES
Medicare Programs; Skilled Nursing Facilities:
Prospective Payment System and Consolidated Billing FY 2016, Value-Based Purchasing Program, Quality Reporting Program and Staffing Data Collection, 22044–22086
NOTICES
Agency Information Collection Activities; Proposals, Submissions, and Approvals, 21720–21723

Central Intelligence Agency
NOTICES
Decennial Review of Operational Files Designations, 21704

Coast Guard
PROPOSED RULES
Safety Zones:
Volvo Ocean Race Newport, East Passage, Narragansett Bay, RI, 21670–21673

Commerce Department
See Economic Development Administration
See International Trade Administration
See National Oceanic and Atmospheric Administration
See National Telecommunications and Information Administration

Community Living Administration
NOTICES
Applications for New Awards:
National Institute on Disability, Independent Living and Rehabilitation Research—Rehabilitation Research and Training Centers, 21723–21727, 21733–21743
Final Priorities:
National Institute on Disability, Independent Living and Rehabilitation Research—Rehabilitation Research and Training Centers, 21727–21733

Consumer Product Safety Commission
NOTICES
Privacy Act; Systems of Records, 21711–21712

Defense Acquisition Regulations System
RULES
Defense Federal Acquisition Regulation Supplements; Technical Amendments, 21656–21657

Defense Department
See Defense Acquisition Regulations System
NOTICES
Charter Renewals:
Federal Advisory Committees, 21713–21715
Meetings:
Board of Regents, Uniformed Services University of the Health Sciences, 21713
Defense Science Board, 21712–21713

Economic Development Administration
NOTICES
Agency Information Collection Activities; Proposals, Submissions, and Approvals:
Application for Investment Assistance, 21704–21706

Employee Benefits Security Administration
PROPOSED RULES
Best Interest Contract Exemptions, 21960–21989
Definition of the Term Fiduciary; Conflict of Interest Rule—Retirement Investment Advice, 21928–21960
Prohibited Transaction Exemptions; Proposed Amendments and Proposed Partial Revocations:
Certain Transactions Involving Insurance Agents and Brokers, Pension Consultants, Insurance Companies, and Investment Company Principal Underwriters, 22010–22020
Securities Transactions Involving Employee Benefit Plans and Broker-Dealers; Prohibitions Respecting Certain Classes of Transactions Involving Employee Benefits Plans and Certain Broker-Dealers, Reporting Dealers and Banks, 22021–22035
Proposed Amendment to Prohibited Transaction Exemptions, Exemptions from Prohibitions Respecting Certain Classes of Transactions Involving Employee Benefit Plans and Certain Broker-Dealers, Reporting Dealers and Banks, 22004–22010
Proposed Amendments to Class Exemptions, 22035–22042
Proposed Class Exemptions:
Principal Transactions in Certain Debt Securities between Investment Advice Fiduciaries and Employee Benefit Plans and IRAs, 21989–22004

Energy Department
See Federal Energy Regulatory Commission
NOTICES
Meetings:
Environmental Management Site-Specific Advisory Board, Portsmouth, 21715–21716
President's Council of Advisors on Science and Technology, 21715

Environmental Protection Agency
RULES
Mandatory Greenhouse Gas Reporting; CFR Correction, 21650
State Hazardous Waste Management Programs:
Vermont—Final Authorizations, 21650–21654
PROPOSED RULES
Air Quality State Implementation Plans; Approvals and Promulgations:
Illinois; Illinois Power Holdings and AmerenEnergy Medina Valley Cogen Variance, 21681–21685
Wisconsin; Infrastructure SIP Requirements for the 2008 Ozone, 2010 NO2, and 2010 SO2 NAAQS, 21685–21691
Clean Water Act Methods for the Analysis of Effluent, 21691
State Hazardous Waste Management Programs:
Vermont, 21691–21692
NOTICES
Agency Information Collection Activities; Proposals, Submissions, and Approvals:
Lead; Clearance and Clearance Testing Requirements for the Renovation, Repair, and Painting Program, 21717–21718
OMB Responses, 21719

National Pollutant Discharge Elimination System General Permits:
Discharges from Dewatering Activities in Massachusetts and New Hampshire—Dewatering General Permits, 21716–21717
Proposed Consent Decrees, Clean Air Act Citizen Suit, 21718–21719

Equal Employment Opportunity Commission
PROPOSED RULES
Regulations under the Americans with Disabilities Act; Amendments, 21659–21670

Federal Aviation Administration
RULES
Airworthiness Directives:
ATR–GIE Avions de Transport Regional Airplanes, 21639–21645
The Boeing Company Airplanes, 21645–21649

Federal Energy Regulatory Commission
NOTICES
Combined Filings, 21716

Federal Railroad Administration
NOTICES
Agency Information Collection Activities; Proposals, Submissions, and Approvals, 21795–21796

Fish and Wildlife Service
NOTICES
Agency Information Collection Activities; Proposals, Submissions, and Approvals:
Alaska Guide Service Evaluation, 21759–21760

Food and Drug Administration
NOTICES
Pilot Program for Center for Devices and Radiological Health Electronic Submission for Home Use Device Labeling, 21743–21744

General Services Administration
NOTICES
Agency Information Collection Activities; Proposals, Submissions, and Approvals:
Transfer Order—Surplus Personal Property and Continuation Sheet, 21719–21720

Health and Human Services Department
See Centers for Medicare & Medicaid Services
See Community Living Administration
See Food and Drug Administration
See National Institutes of Health
NOTICES
Agency Information Collection Activities; Proposals, Submissions, and Approvals, 21744–21746

Homeland Security Department
See Coast Guard
See Transportation Security Administration
See U.S. Customs and Border Protection

Housing and Urban Development Department
NOTICES
Consolidated Delegations of Authority:
Office of Community Planning and Development, 21747–21750
Office of Housing—Federal Housing Administration, 21756–21759
Environmental Impact Statements; Availability, etc.:
Coastal and Social Resiliency Initiatives for Tottenville Shoreline, Staten Island, NY, 21751–21754
Order of Succession:
Office of Housing, 21750
Orders of Succession:
Office of Community Planning and Development, 21755–21756
Section 8 Housing Assistance Payments Program:
FY 2015 Inflation Factors for Public Housing Agency Renewal Funding, 21754–21755
Service Contract Inventories; FY 2013, 21750–21751

Interior Department
See Fish and Wildlife Service
See Land Management Bureau
See National Park Service
See Ocean Energy Management Bureau

Internal Revenue Service
NOTICES
Agency Information Collection Activities; Proposals, Submissions, and Approvals, 21801–21802

International Trade Administration
NOTICES
Antidumping or Countervailing Duty Investigations, Orders, or Reviews:
Melamine from the People's Republic of China, 21706–21707
Melamine from Trinidad and Tobago, 21708–21709
Quarterly Updates to the Annual Listing of Foreign Government Subsidies:
Articles of Cheese Subject to an In-Quota Rate of Duty, 21709

International Trade Commission
NOTICES
Investigations; Determinations, Modifications, and Rulings, etc.:
Certain Sulfentrazone, Sulfentrazone Compositions and Processes for Making Sulfentrazone, 21762–21763
Meetings; Sunshine Act, 21763

Justice Department
NOTICES
Agency Information Collection Activities; Proposals, Submissions, and Approvals:
Federal Explosives License/Permit Renewal Applications, 21766
Semi-Annual Progress Report for Grantees from the Grants to Encourage Arrest Policies and Enforcement of Protection Orders Program, 21763–21764
Semi-Annual Progress Report for the Court Training and Improvements Program, 21764–21765
Semi-Annual Progress Report for the Semi-Annual Progress Report for Grantees from the Engaging Men and Youth Program, 21765–21766
Consent Decrees under the Clean Water Act and the Resource Conservation and Recovery Act, 21765

Labor Department
See Employee Benefits Security Administration

Land Management Bureau
NOTICES
Management Plans:
Owyhee Canyonlands Wilderness and Wild and Scenic Rivers, ID, 21761

Public Land Orders:
Michigan—Revocation of the Withdrawal Established by Executive Order Dated August 24, 1842, 21760–21761

Legal Services Corporation
RULES
Application of Federal Law to LSC Recipients, 21654–21656
PROPOSED RULES
Recipient Fund Balances, 21700–21703
Use of Non-LSC Funds, Transfer of LSC Funds, Program Integrity; Subgrants and Membership Fees or Dues; Cost Standards and Procedures, 21692–21700

National Aeronautics and Space Administration
NOTICES
Meetings:
Aerospace Safety Advisory Panel, 21766–21767

National Highway Traffic Safety Administration
NOTICES
Agency Information Collection Activities; Proposals, Submissions, and Approvals, 21796–21797
Buy America Waivers, 21797–21801

National Institutes of Health
NOTICES
Meetings:
National Institute of Biomedical Imaging and Bioengineering, 21746
National Institute of Dental and Craniofacial Research, 21746
National Institute of Diabetes and Digestive and Kidney Diseases, 21746

National Oceanic and Atmospheric Administration
NOTICES
Statements of Organization, Practices, and Procedures:
New England Fishery Management Council, 21710

National Park Service
PROPOSED RULES
Gathering of Certain Plants or Plant Parts by Federally Recognized Indian Tribes for Traditional Purposes, 21674–21681
NOTICES
National Register of Historic Places:
Pending Nominations and Related Actions, 21761–21762

National Science Foundation
NOTICES
Charter Renewals:
Advisory Committee for International Science and Engineering, 21767
Meetings:
Advisory Committee for Education and Human Resources, 21767

National Telecommunications and Information Administration

NOTICES
Meetings:
Commerce Spectrum Management Advisory Committee, 21710–21711

Nuclear Regulatory Commission
RULES
List of Approved Spent Fuel Storage Casks:
Holtec International HI–STORM 100 Cask System, Certificate of Compliance No. 1014, Amendment No. 8, Revision No. 1; Withdrawal, 21639
PROPOSED RULES
Guidance:
Alternate Risk-Informed Approach for Addressing the Effects of Debris on Post-Accident Long-Term Core Cooling, 21658–21659
NOTICES
Guidance:
Managing the Safety/Security Interface, 21770–21771
Sizing of Large Lead-Acid Storage Batteries, 21774–21775
License Amendment Applications:
Department of Energy; Fort St. Vrain Independent Spent Fuel Storage Installation, 21772–21774
License Transfers:
PPL Susquehanna, LLC, Susquehanna Steam Electric Station, Units 1 and 2, 21767–21769
Meetings; Sunshine Act, 21771–21772
Seismic Stability Analysis for Spent Fuel Dry Cask Stack-up Configuration, 21770

Ocean Energy Management Bureau
PROPOSED RULES
Outer Continental Shelf:
Oil and Gas and Sulphur Operations; Requirements for Exploratory Drilling on the Arctic Outer Continental Shelf, 21670

Postal Regulatory Commission
NOTICES
New Postal Products, 21775–21776

Safety and Environmental Enforcement Bureau
PROPOSED RULES
Outer Continental Shelf:
Oil and Gas and Sulphur Operations; Requirements for Exploratory Drilling on the Arctic Outer Continental Shelf, 21670

Securities and Exchange Commission
RULES
Adoption of Updated EDGAR Filer Manual, 21649–21650
Small and Additional Issues Exemptions under the Securities Act, 21806–21925
NOTICES
Agency Information Collection Activities; Proposals, Submissions, and Approvals, 21784–21785, 21789–21790
Self-Regulatory Organizations; Proposed Rule Changes:
BATS Exchange, Inc., 21776–21778
BATS Y-Exchange, Inc., 21782–21784
NASDAQ OMX BX, Inc., 21790–21792
NASDAQ Stock Market LLC, 21778–21782
NYSE Arca, Inc., 21785–21789

Small Business Administration
NOTICES
Disaster Declarations:
Connecticut, 21793
New York, 21792–21793
Oklahoma, 21793
Rhode Island, 21792

Trade Representative, Office of United States
NOTICES
WTO Dispute Settlements:
Anti-Dumping and Countervailing Measures on Certain Coated Paper from Indonesia, 21794–21795

Transportation Department
See Federal Aviation Administration
See Federal Railroad Administration
See National Highway Traffic Safety Administration

Transportation Security Administration
NOTICES
Agency Information Collection Activities; Proposals, Submissions, and Approvals:
Law Enforcement Officer Flying Armed Training, 21747

Treasury Department
See Internal Revenue Service
NOTICES
Requests for Nominations:
Advisory Committee on Risk-Sharing Mechanisms to Voluntarily Reinsure Against Losses from Acts of Terrorism, 21802

U.S. Customs and Border Protection
NOTICES
Tariff Rate Quota for Tuna in Airtight Containers for Calendar Year 2015, 21746–21747

U.S.–China Economic and Security Review Commission
NOTICES
Public Hearing:
U.S.-China Economic and Security Review Commission, 21802–21803

Separate Parts In This Issue

Part II
Securities and Exchange Commission, 21806–21925

Part III
Labor Department, Employee Benefits Security Administration, 21928–22042

Part IV
Health and Human Services Department, Centers for Medicare & Medicaid Services, 22044–22086

Reader Aids

Consult the Reader Aids section at the end of this page for phone numbers, online resources, finding aids, reminders, and notice of recently enacted public laws.

To subscribe to the Federal Register Table of Contents LISTSERV electronic mailing list, go to http://listserv.access.gpo.gov and select Online mailing list archives, FEDREGTOC-L, Join or leave the list (or change settings); then follow the instructions.

CFR PARTS AFFECTED IN THIS ISSUE

A cumulative list of the parts affected this month can be found in the Reader Aids section at the end of this issue.

10 CFR
72 21639
Proposed Rules:
50 21658
52 21658

14 CFR
39 (2 documents) 21639, 21645

17 CFR
200 21806
230 21806
232 (2 documents) 21649, 21806
239 21806
240 21806
249 21806
260 21806

29 CFR
Proposed Rules:
1630 21659
2509 21928
2510 21928
2550 (6 documents) 21960, 21989, 22004, 22010, 22021, 22035

30 CFR
Proposed Rules:
250 21670
254 21670
550 21670

33 CFR
Proposed Rules:
165 21670

36 CFR
Proposed Rules:
2 21674

40 CFR
98 21650
271 21650
Proposed Rules:
52 (2 documents) 21681, 21685
136 21691
271 21691

42 CFR
Proposed Rules:
483 22044

45 CFR
1640 21654
Proposed Rules:
1610 21692
1627 21692
1628 21700
1630 21692

48 CFR
205 21656
206 21656
208 21656
210 21656
213 21656
215 21656
216 21656

Rules and Regulations

Federal Register
Vol. 80, No. 75
Monday, April 20, 2015

This section of the FEDERAL REGISTER contains regulatory documents having general applicability and legal effect, most of which are keyed to and codified in the Code of Federal Regulations, which is published under 50 titles pursuant to 44 U.S.C. 1510.

The Code of Federal Regulations is sold by the Superintendent of Documents. Prices of new books are listed in the first FEDERAL REGISTER issue of each week.

NUCLEAR REGULATORY COMMISSION

10 CFR Part 72

[NRC–2014–0233]

RIN 3150–AJ47

List of Approved Spent Fuel Storage Casks: Holtec International HI–STORM 100 Cask System, Certificate of Compliance No. 1014, Amendment No. 8, Revision No. 1

AGENCY: Nuclear Regulatory Commission.

ACTION: Direct final rule; withdrawal.

SUMMARY: The U.S. Nuclear Regulatory Commission (NRC) is withdrawing a direct final rule that would have amended the NRC's spent fuel storage regulations by revising the Holtec International HI–STORM 100 Cask System listing within the ''List of approved spent fuel storage casks'' to add Amendment No. 8, Revision No. 1. This rule would have superseded Amendment No. 8 (effective May 2, 2012, and corrected on November 16, 2012), to the Certificate of Compliance (CoC) No. 1014. The NRC is taking this action because it has received at least one significant adverse comment in response to a companion proposed rule that was concurrently published with the direct final rule.

DATES: Effective April 20, 2015, the NRC withdraws the direct final rule published at 80 FR 6430 on February 5, 2015.

ADDRESSES: Please refer to Docket ID NRC–2014–0233 when contacting the NRC about the availability of information for this action. You may obtain publicly-available information related to this action by any of the following methods:

- *Federal Rulemaking Web site:* Go to *http://www.regulations.gov* and search for Docket ID NRC–2014–0233. Address questions about NRC dockets to Carol Gallagher; telephone: 301–415–3463; email: *Carol.Gallagher@nrc.gov.* For technical questions, contact the individual listed in the **FOR FURTHER INFORMATION CONTACT** section of this document.
- *NRC's Agencywide Documents Access and Management System (ADAMS):* You may obtain publicly-available documents online in the ADAMS Public Documents collection at *http://www.nrc.gov/reading-rm/adams.html.* To begin the search, select ''ADAMS Public Documents'' and then select ''Begin Web-based ADAMS Search.'' For problems with ADAMS, please contact the NRC's Public Document Room (PDR) reference staff at 1–800–397–4209, 301–415–4737, or by email to *pdr.resource@nrc.gov.*
- *NRC's PDR:* You may examine and purchase copies of public documents at the NRC's PDR, Room O1–F21, One White Flint North, 11555 Rockville Pike, Rockville, Maryland 20852.

FOR FURTHER INFORMATION CONTACT: Gregory R. Trussell, Office of Nuclear Material Safety and Safeguards, U.S. Nuclear Regulatory Commission, Washington, DC 20555–0001; telephone: 301–415–6445; email: *Gregory.Trussell@nrc.gov.*

SUPPLEMENTARY INFORMATION: On February 5, 2015 (80 FR 6430), the NRC published in the **Federal Register** a direct final rule amending its regulations in part 72 of Title 10 of the *Code of Federal Regulations* to amend the NRC's spent fuel storage regulations by revising the Holtec International HI–STORM 100 Cask System listing within the ''List of approved spent fuel storage casks'' to add Amendment No. 8, Revision No. 1, which would have superseded Amendment No. 8 (effective May 2, 2012, and corrected on November 16, 2012), to the Certificate of Compliance (CoC) No. 1014. The direct final rule was to become effective on April 21, 2015. The NRC also concurrently published a companion proposed rule on February 5, 2015 (80 FR 6466).

In the February 5, 2015, proposed rule, the NRC stated that if any significant adverse comments were received, then the NRC would withdraw the direct final rule by publishing a document in the **Federal Register**. As a result, the direct final rule would not take effect. The NRC received 16 comments from private citizens. The comments are available at *www.regulations.gov* by searching on Docket ID NRC–2014–0233. The NRC determined that at least one of the comments is significant and adverse as defined in Section II, ''Procedural Background,'' of the direct final rule, because the comment raises an issue serious enough to warrant a substantive response to clarify or complete the record. Therefore, the NRC is withdrawing the direct final rule.

As stated in the February 5, 2015, proposed rule, the NRC will address the comments in a subsequent final rule. The NRC will not initiate a second comment period on this action.

Dated at Rockville, Maryland, this 10th day of April, 2015.

For the Nuclear Regulatory Commission.

Mark A. Satorius,

Executive Director for Operations.

[FR Doc. 2015–09023 Filed 4–17–15; 8:45 am]

BILLING CODE 7590–01–P

DEPARTMENT OF TRANSPORTATION

Federal Aviation Administration

14 CFR Part 39

[Docket No. FAA–2015–0497; Directorate Identifier 2012–NM–192–AD; Amendment 39–18128; AD 2015–06–10]

RIN 2120–AA64

Airworthiness Directives; ATR–GIE Avions de Transport Régional Airplanes

AGENCY: Federal Aviation Administration (FAA), Department of Transportation (DOT).

ACTION: Final rule; request for comments.

SUMMARY: We are adopting a new airworthiness directive (AD) for certain ATR–GIE Avions de Transport Régional Model ATR72–212A airplanes. This AD requires inspection of the shock mount pick-up fittings and cone bolts, and replacement of certain shock mount pick-up fittings if necessary. This AD was prompted by reports of several cases of engine shock mount pick-up fittings with cracks or failure on the engine left-hand (LH) aft side attachment. We are issuing this AD to detect and correct an aft side attachment

pick-up fitting failure associated with a cone bolt failure that could reduce the structural integrity of the concerned engine nacelle, and possibly result in detachment of the engine and consequent reduced control of the airplane.

DATES: This AD becomes effective May 5, 2015.

The Director of the Federal Register approved the incorporation by reference of certain publications listed in this AD as of May 5, 2015.

We must receive comments on this AD by June 4, 2015.

ADDRESSES: You may send comments, using the procedures found in 14 CFR 11.43 and 11.45, by any of the following methods:

- Federal eRulemaking Portal: Go to *http://www.regulations.gov.* Follow the instructions for submitting comments.
- Fax: 202–493–2251.
- Mail: U.S. Department of Transportation, Docket Operations, M–30, West Building Ground Floor, Room W12–140, 1200 New Jersey Avenue SE., Washington, DC 20590.
- Hand Delivery: U.S. Department of Transportation, Docket Operations, M–30, West Building Ground Floor, Room W12–140, 1200 New Jersey Avenue SE., Washington, DC, between 9 a.m. and 5 p.m., Monday through Friday, except Federal holidays.

For service information identified in this AD, contact ATR–GIE Avions de Transport Régional, 1, Allée Pierre Nadot, 31712 Blagnac Cedex, France; telephone +33 (0) 5 62 21 62 21; fax +33 (0) 5 62 21 67 18; email *continued.airworthiness@atr.fr;* Internet *http://www.aerochain.com.* You may view this referenced service information at the FAA, Transport Airplane Directorate, 1601 Lind Avenue SW., Renton, WA. For information on the availability of this material at the FAA, call 425–227–1221. It is also available on the Internet at *http://www.regulations.gov* by searching for and locating Docket No. FAA–2015–0497.

Examining the AD Docket

You may examine the AD docket on the Internet at *http://www.regulations.gov* by searching for and locating Docket No. FAA–2015–0497; or in person at the Docket Operations office between 9 a.m. and 5 p.m., Monday through Friday, except Federal holidays. The AD docket contains this AD, the regulatory evaluation, any comments received, and other information. The street address for the Docket Operations office (telephone 800–647–5527) is in the **ADDRESSES** section. Comments will be available in the AD docket shortly after receipt.

FOR FURTHER INFORMATION CONTACT: Tom Rodriguez, Aerospace Engineer, International Branch, ANM–116, Transport Airplane Directorate, FAA, 1601 Lind Avenue SW., Renton, WA 98057–3356; telephone 425–227–1137; fax 425–227–1149.

SUPPLEMENTARY INFORMATION:

Discussion

The European Aviation Safety Agency (EASA), which is the Technical Agent for the Member States of the European Union, has issued EASA Airworthiness Directive 2012–0192, dated September 21, 2012 (corrected September 24, 2012) (referred to after this as the Mandatory Continuing Airworthiness Information, or ''the MCAI''), to correct an unsafe condition for certain ATR–GIE Avions de Transport Régional Model ATR72–212A airplanes. The MCAI states:

> Several cases of engine shock mount pick-up fitting with crack or failure have been reported, always on engine Left Hand (LH) aft side attachment. Prompted by those reports, improved Part Number (P/N) S54210394200 (Barry Control P/N 94423–05) fittings (machined radius modification) have been introduced in production, having serial number (s/n) 2451 and higher. No crack has been reported on aeroplanes equipped with those improved fittings.
>
> Two recent cases of failed cone bolt have been reported on ATR 72–212A aeroplanes, both on engine Right Hand (RH) aft side isolator.
>
> An aft side attachment pick-up fitting failure associated to a cone bolt failure, if not detected and corrected, could reduce the structural integrity of the concerned engine nacelle, possibly resulting in detachment of the engine and consequent reduced control of the aeroplane.
>
> For the reasons described above, this [EASA] AD requires a one-time [detailed] inspection [for cracks] of the shock mount pick-up fittings and cone bolts and, depending on findings, accomplishment of applicable repair. This AD also requires replacement of all LH shock mount pick-up fitting P/N S54210394200 having a s/n lower than 2451.

* * * * *

You may examine the MCAI on the Internet at *http://www.regulations.gov* by searching for and locating Docket No. FAA–2015–0497.

Related Service Information Under 1 CFR Part 51

ATR–GIE Avions de Transport Régional (ATR) has issued the following service information. The service information describes procedures for a detailed visual inspection of the engine shock mounts. The actions described in this service information are intended to correct the unsafe condition identified in the MCAI.

- ATR ATR72 airplane maintenance manual (AMM) Job Instruction Card 54–11–61 DVI 10000, Detailed Visual Inspection of Forward Engine Mount, dated March 1, 2012.
- ATR ATR72 AMM Job Instruction Card 71–20–00 DVI 10000, Detailled (sic) Visual Inspec[tion] of Engine Shockmounts, dated March 1, 2012.

This service information is reasonably available; see **ADDRESSES** for ways to access this service information.

FAA's Determination and Requirements of This AD

This product has been approved by the aviation authority of another country, and is approved for operation in the United States. Pursuant to our bilateral agreement with the State of Design Authority, we have been notified of the unsafe condition described in the MCAI and service information referenced above. We are issuing this AD because we evaluated all pertinent information and determined the unsafe condition exists and is likely to exist or develop on other products of the same type design.

FAA's Determination of the Effective Date

Since there are currently no domestic operators of this product, notice and opportunity for public comment before issuing this AD are unnecessary.

Comments Invited

This AD is a final rule that involves requirements affecting flight safety, and we did not precede it by notice and opportunity for public comment. We invite you to send any written relevant data, views, or arguments about this AD. Send your comments to an address listed under the **ADDRESSES** section. Include ''Docket No. FAA–2015–0497; Directorate Identifier 2012–NM–192–AD'' at the beginning of your comments. We specifically invite comments on the overall regulatory, economic, environmental, and energy aspects of this AD. We will consider all comments received by the closing date and may amend this AD based on those comments.

We will post all comments we receive, without change, to *http://www.regulations.gov,* including any personal information you provide. We will also post a report summarizing each substantive verbal contact we receive about this AD.

Costs of Compliance

Currently, there are no affected airplanes on the U.S. Register. However,

if an affected airplane is imported and placed on the U.S. Register in the future, we estimate that it will take about 3 work-hours per product to comply with the basic requirements of this AD. The average labor rate is $85 per work-hour. Based on these figures, we estimate the cost of this AD on U.S. operators to be $255 per product.

Paperwork Reduction Act

A federal agency may not conduct or sponsor, and a person is not required to respond to, nor shall a person be subject to penalty for failure to comply with a collection of information subject to the requirements of the Paperwork Reduction Act unless that collection of information displays a current valid OMB control number. The control number for the collection of information required by this AD is 2120–0056. The paperwork cost associated with this AD has been detailed in the Costs of Compliance section of this document and includes time for reviewing instructions, as well as completing and reviewing the collection of information. Therefore, all reporting associated with this AD is mandatory. Comments concerning the accuracy of this burden and suggestions for reducing the burden should be directed to the FAA at 800 Independence Ave., SW., Washington, DC 20591, ATTN: Information Collection Clearance Officer, AES–200.

Authority for This Rulemaking

Title 49 of the United States Code specifies the FAA's authority to issue rules on aviation safety. Subtitle I, section 106, describes the authority of the FAA Administrator. ''Subtitle VII: Aviation Programs,'' describes in more detail the scope of the Agency's authority.

We are issuing this rulemaking under the authority described in ''Subtitle VII, Part A, Subpart III, Section 44701: General requirements.'' Under that section, Congress charges the FAA with promoting safe flight of civil aircraft in air commerce by prescribing regulations for practices, methods, and procedures the Administrator finds necessary for safety in air commerce. This regulation is within the scope of that authority because it addresses an unsafe condition that is likely to exist or develop on products identified in this rulemaking action.

Regulatory Findings

We determined that this AD will not have federalism implications under Executive Order 13132. This AD will not have a substantial direct effect on the States, on the relationship between the national government and the States, or on the distribution of power and responsibilities among the various levels of government.

For the reasons discussed above, I certify that this AD:

1. Is not a ''significant regulatory action'' under Executive Order 12866;
2. Is not a ''significant rule'' under the DOT Regulatory Policies and Procedures (44 FR 11034, February 26, 1979);
3. Will not affect intrastate aviation in Alaska; and
4. Will not have a significant economic impact, positive or negative, on a substantial number of small entities under the criteria of the Regulatory Flexibility Act.

List of Subjects in 14 CFR Part 39

Air transportation, Aircraft, Aviation safety, Incorporation by reference, Safety.

Adoption of the Amendment

Accordingly, under the authority delegated to me by the Administrator, the FAA amends 14 CFR part 39 as follows:

PART 39—AIRWORTHINESS DIRECTIVES

■ 1. The authority citation for part 39 continues to read as follows:

Authority: 49 U.S.C. 106(g), 40113, 44701.

§ 39.13 [Amended]

■ 2. The FAA amends § 39.13 by adding the following new airworthiness directive (AD):

2015–06–10 ATR–GIE Avions de Transport Régional: Amendment 39–18128. Docket No. FAA–2015–0497; Directorate Identifier 2012–NM–192–AD.

(a) Effective Date

This AD becomes effective May 5, 2015.

(b) Affected ADs

None.

(c) Applicability

This AD applies to ATR–GIE Avions de Transport Régional Model ATR72–212A airplanes, certificated in any category, manufacturer serial numbers 468 through 719 inclusive, 723, 776, 777, 779, 821, and 837.

(d) Subject

Air Transport Association (ATA) of America 54, Nacelles/Pylons.

(e) Reason

This AD was prompted by reports of several cases of engine shock mount pick-up fittings with cracks or failure on the engine left-hand (LH) aft side attachment. We are issuing this AD to detect and correct an aft side attachment pick up fitting failure associated with a cone bolt failure that could reduce the structural integrity of the concerned engine nacelle, and possibly result in detachment of the engine and consequent reduced control of the airplane.

(f) Compliance

Comply with this AD within the compliance times specified, unless already done.

(g) Engine Shock Mount Pick-up Fittings Inspection

Within 6 months after the effective date of this AD, accomplish the actions specified by paragraphs (g)(1), (g)(2), and (g)(3) of this AD concurrently.

(1) Identify the serial number (S/N) of the part number (P/N) S54210394200 (Barry Control P/N 94423–05) LH and right-hand (RH) shock mount pick-up fittings installed on both engine nacelles. Figure 1 to paragraph (g)(1) of this AD identifies the fitting part number and serial number locations.

BILLING CODE 4910–13–C

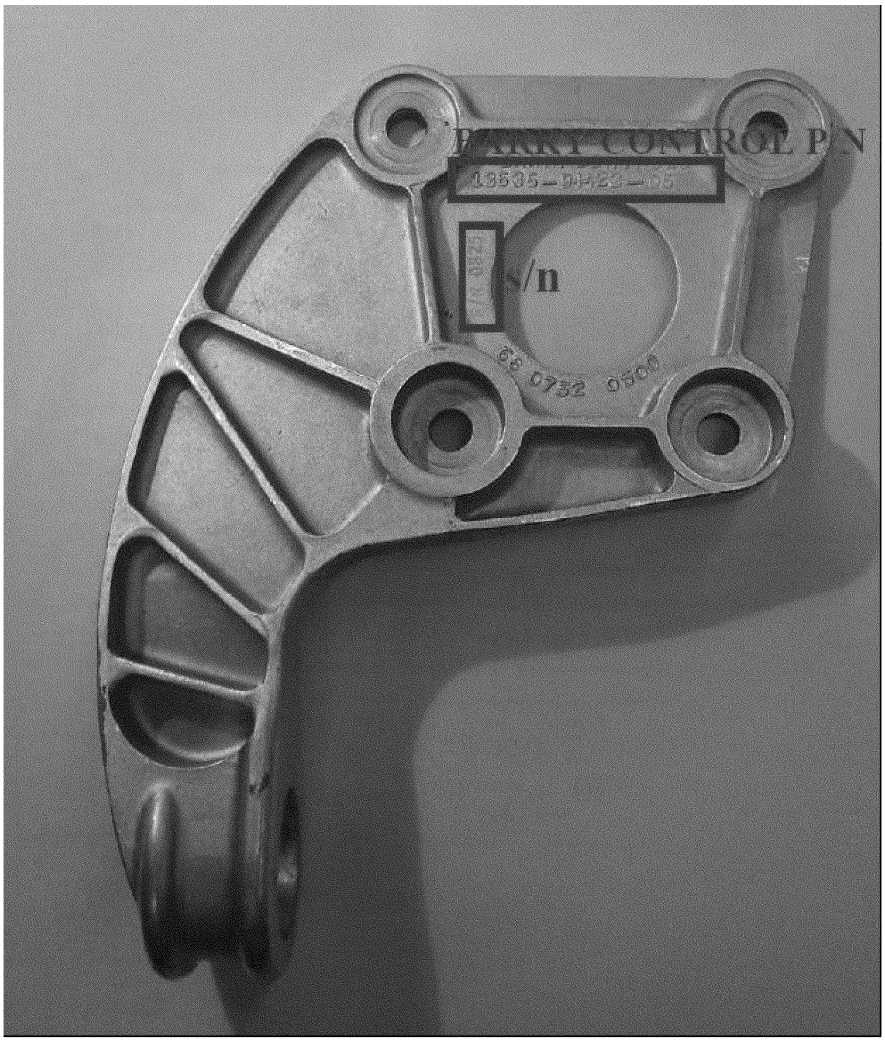

Figure 1 to paragraph (g)(1) of this AD - Location of Fitting Part Number and Serial Number

(2) Do a detailed inspection of both LH and RH aft side isolator pick-up fittings on both engines to detect cracks, in accordance with paragraph 004.1 of ATR ATR72 Aircraft Maintenance Manual (AMM) Job Instruction Card (JIC) 54–11–61 DVI 10000, dated March 1, 2012. Refer to figure 2 to paragraph (g)(2) of this AD for potential crack location.

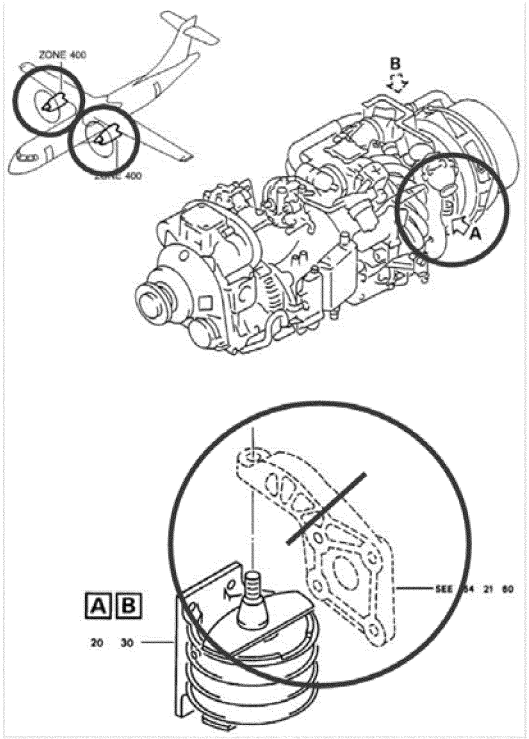

Figure 2 to Paragraph (g)(2) of this AD - Shock Mount Pick-up Fitting

(3) Do a detailed inspection of both LH and RH aft shock mount cone bolts on both engines to detect cracks, in accordance with paragraph 006.3.A. of ATR ATR72 AMM JIC 71–20–00 DVI 10000. Refer to figure 3 to paragraph (g)(3) of this AD for potential crack location.

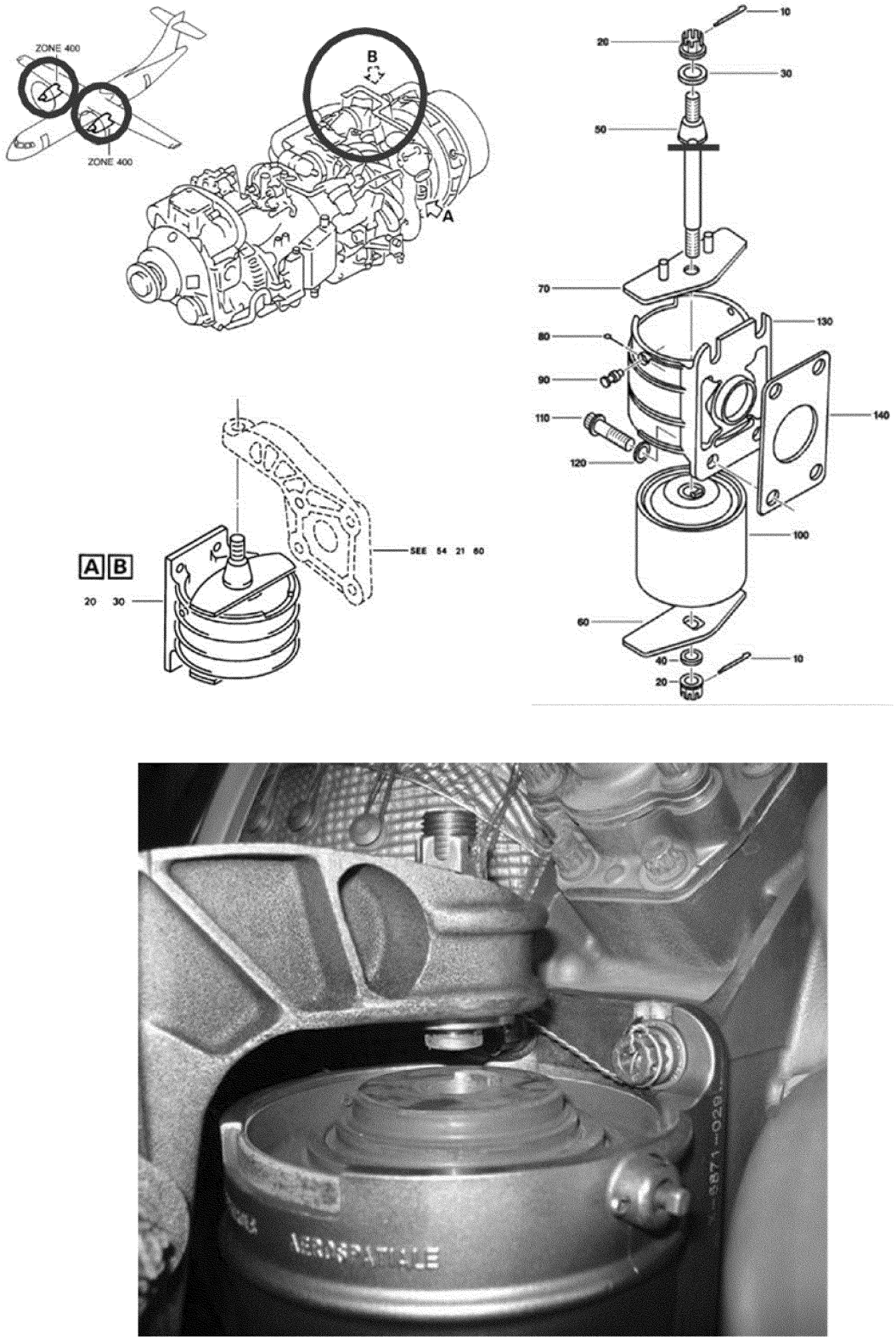

Figure 3 to paragraph (g)(3) of this AD - Shock Mount Cone Bolt

(h) Corrective Actions

(1) If any crack is found during any inspection required by paragraphs (g)(2) and (g)(3) of this AD: Before further flight, repair in accordance with a method approved by the Manager, International Branch, ANM–116, Transport Airplane Directorate, FAA; or EASA; or ATR's EASA Design Organization Approval (DOA).

(2) If the serial number of the LH shock mount pick-up fitting, identified during any inspection required by paragraph (g)(1) of this AD, is lower than 2451 or is unreadable, and no crack has been found during any

inspection required by paragraphs (g)(2) and (g)(3) of this AD: Within 6 months after the inspection required by paragraph (g)(2) of this AD, replace the LH shock mount pick-up fitting P/N S54210394200 with a serviceable LH shock mount pick-up fitting having a serial number equal to or higher than 2451, in accordance with a method approved by the Manager, International Branch, ANM–116, Transport Airplane Directorate, FAA; or EASA; or ATR—GIE Avions de Transport Régional's EASA DOA.

(i) Parts Installation Limitation

As of the effective date of this AD, do not install on any airplane a LH shock mount pick-up fitting P/N S54210394200, unless it is serviceable and has been determined to have an S/N equal to or higher than 2451, in accordance with the requirements of paragraph (g)(1) of this AD.

(j) Reporting Requirement

Submit a report of the findings (both positive and negative) of the inspections required by paragraphs (g)(1), (g)(2), and (g)(3) of this AD to ATR at *techdesk@atr.fr* and *continued.airworthiness@atr.fr* at the applicable time specified in paragraph (j)(1) or (j)(2) of this AD. The report must include the airplane serial number, registration, inspection date, inspection results, and engine pick-up serial numbers.

(1) If the inspection was done on or after the effective date of this AD: Submit the report within 30 days after the inspection.

(2) If the inspection was done before the effective date of this AD: Submit the report within 30 days after the effective date of this AD.

(k) Other FAA AD Provisions

The following provisions also apply to this AD:

(1) *Alternative Methods of Compliance (AMOCs):* The Manager, International Branch, ANM–116, FAA, has the authority to approve AMOCs for this AD, if requested using the procedures found in 14 CFR 39.19. In accordance with 14 CFR 39.19, send your request to your principal inspector or local Flight Standards District Office, as appropriate. If sending information directly to the International Branch, send it to ATTN: Tom Rodriguez, Aerospace Engineer, International Branch, ANM–116, Transport Airplane Directorate, FAA, 1601 Lind Avenue SW., Renton, WA 98057–3356; telephone 425–227–1137; fax 425–227–1149. Information may be emailed to: *9-ANM-116-AMOC-REQUESTS@faa.gov.* Before using any approved AMOC, notify your appropriate principal inspector, or lacking a principal inspector, the manager of the local flight standards district office/certificate holding district office. The AMOC approval letter must specifically reference this AD.

(2) *Contacting the Manufacturer:* For any requirement in this AD to obtain corrective actions from a manufacturer, the action must be accomplished using a method approved by the Manager, International Branch, ANM–116, Transport Airplane Directorate, FAA; or EASA; or ATR–GIE Avions de Transport Régional's EASA DOA. If approved by the DOA, the approval must include the DOA-authorized signature.

(3) *Reporting Requirements:* A federal agency may not conduct or sponsor, and a person is not required to respond to, nor shall a person be subject to a penalty for failure to comply with a collection of information subject to the requirements of the Paperwork Reduction Act unless that collection of information displays a current valid OMB Control Number. The OMB Control Number for this information collection is 2120–0056. Public reporting for this collection of information is estimated to be approximately 5 minutes per response, including the time for reviewing instructions, completing and reviewing the collection of information. All responses to this collection of information are mandatory. Comments concerning the accuracy of this burden and suggestions for reducing the burden should be directed to the FAA at: 800 Independence Ave. SW., Washington, DC 20591, Attn: Information Collection Clearance Officer, AES–200.

(l) Related Information

(1) Refer to Mandatory Continuing Airworthiness Information (MCAI) EASA Airworthiness Directive 2012–0192, dated September 21, 2012 (corrected September 24, 2012), for related information. You may examine the MCAI on the Internet at *http://www.regulations.gov* by searching for and locating Docket No. FAA–2015–0497.

(2) Service information identified in this AD that is not incorporated by reference is available at the addresses specified in paragraphs (m)(3) and (m)(4) of this AD.

(m) Material Incorporated by Reference

(1) The Director of the Federal Register approved the incorporation by reference (IBR) of the service information listed in this paragraph under 5 U.S.C. 552(a) and 1 CFR part 51.

(2) You must use this service information as applicable to do the actions required by this AD, unless this AD specifies otherwise.

(i) ATR ATR72 Airplane Maintenance Manual (AMM) Job Instruction Card 54–11–61 DVI 10000, Detailed Visual Inspection of Forward Engine Mount, dated March 1, 2012.

(ii) ATR ATR72 AMM Job Instruction Card 71–20–00 DVI 10000, Detailled (sic) Visual Inspec[tion] of Engine Shockmounts, dated March 1, 2012.

(3) For service information identified in this AD, contact ATR—GIE Avions de Transport Régional, 1, Allée Pierre Nadot, 31712 Blagnac Cedex, France; telephone +33 (0) 5 62 21 62 21; fax +33 (0) 5 62 21 67 18; email *continued.airworthiness@atr.fr;* Internet *http://www.aerochain.com.*

(4) You may view this service information at the FAA, Transport Airplane Directorate, 1601 Lind Avenue SW., Renton, WA. For information on the availability of this material at the FAA, call 425–227–1221.

(5) You may view this service information that is incorporated by reference at the National Archives and Records Administration (NARA). For information on the availability of this material at NARA, call 202–741–6030, or go to: *http://www.archives.gov/federal-register/cfr/ibr-locations.html.*

Issued in Renton, Washington, on March 19, 2015.

Michael Kaszycki,

Acting Manager, Transport Airplane Directorate, Aircraft Certification Service.

[FR Doc. 2015–07162 Filed 4–17–15; 8:45 am]

BILLING CODE 4910–13–P

DEPARTMENT OF TRANSPORTATION

Federal Aviation Administration

14 CFR Part 39

[Docket No. FAA–2011–0475; Directorate Identifier 2010–NM–199–AD; Amendment 39–18137; AD 2015–08–01]

RIN 2120–AA64

Airworthiness Directives; The Boeing Company Airplanes

AGENCY: Federal Aviation Administration (FAA), DOT.

ACTION: Final rule.

SUMMARY: We are adopting a new airworthiness directive (AD) for certain The Boeing Company Model 757–200, –200PF, –200CB, and –300 series airplanes. This AD was prompted by numerous reports of unintended lateral oscillations during final approach, just before landing. This AD requires, depending on airplane configuration, installing new relays and bracket assemblies, inspecting to ensure that the new relays do not contact adjacent wire bundles, torquing the bracket assembly installation nuts and ground stud nuts, doing bond resistance tests between the bracket assemblies and the terminal lugs on the ground studs, and related investigative and corrective actions if necessary. We are issuing this AD to reduce the chance of unintended lateral oscillations near touchdown, which could result in loss of lateral control of the airplane, and consequent airplane damage or injury to flightcrew and passengers.

DATES: This AD is effective May 26, 2015.

The Director of the Federal Register approved the incorporation by reference of certain publications listed in this AD as of May 26, 2015.

ADDRESSES: For service information identified in this AD, contact Boeing Commercial Airplanes, Attention: Data & Services Management, P. O. Box 3707, MC 2H–65, Seattle, WA 98124–2207; telephone 206–544–5000, extension 1; fax 206–766–5680; Internet *https://www.myboeingfleet.com.* You may view this referenced service information at the FAA, Transport Airplane Directorate, 1601 Lind Avenue SW.,

Renton, WA. For information on the availability of this material at the FAA, call 425–227–1221. It is also available on the Internet at *http://www.regulations.gov* by searching for and locating Docket No. FAA 2011–0475.

Examining the AD Docket

You may examine the AD docket on the Internet at *http://www.regulations.gov* by searching for and locating Docket No. FAA–2011–0475; or in person at the Docket Management Facility between 9 a.m. and 5 p.m., Monday through Friday, except Federal holidays. The AD docket contains this AD, the regulatory evaluation, any comments received, and other information. The address for the Docket Office (phone: 800–647–5527) is Docket Management Facility, U.S. Department of Transportation, Docket Operations, M–30, West Building Ground Floor, Room W12–140, 1200 New Jersey Avenue SE., Washington, DC 20590.

FOR FURTHER INFORMATION CONTACT: Jeffrey Palmer, Aerospace Engineer, Systems and Equipment Branch, ANM–130L, Los Angeles Aircraft Certification Office (ACO), FAA, 3960 Paramount Boulevard, Lakewood, CA 90712–4137; phone: 562–627–5351; fax: 562–627–5210; email: *jeffrey.w.palmer@faa.gov.*

SUPPLEMENTARY INFORMATION:

Discussion

We issued a supplemental notice of proposed rulemaking (SNPRM) to amend 14 CFR part 39 by adding an AD that would apply to certain The Boeing Company Model 757–200, –200PF, –200CB, and –300 series airplanes. The SNPRM published in the **Federal Register** on July 1, 2014 (79 FR 37239). We preceded the SNPRM with a notice of proposed rulemaking (NPRM) that published in the **Federal Register** on May 24, 2011 (76 FR 30043). The NPRM proposed to require, for certain airplanes, installing new relays adjacent to two of the spoiler control modules. For certain other airplanes, the NPRM proposed to require torquing the bracket assembly installation nuts and ground stud nuts, and doing bond resistance tests between the bracket assemblies and the terminal lugs on the ground studs. The NPRM was prompted by numerous reports of unintended lateral oscillations during final approach, just before landing. In addition to the actions proposed in the NPRM, the SNPRM proposed to require installing three new relays on the opposite side of the same relay bracket assembly; and for certain airplanes, doing an additional inspection to ensure that the three new relays do not contact adjacent wire bundles, and related investigative and corrective actions if necessary. We are issuing this AD to reduce the chance of unintended lateral oscillations near touchdown, which could result in loss of lateral control of the airplane, and consequent airplane damage or injury to flightcrew and passengers.

Comments

We gave the public the opportunity to participate in developing this AD. The following presents the comments received on the SNPRM (79 FR 37239, July 1, 2014) and the FAA's response to each comment.

Support for the SNPRM (79 FR 37239, July 1, 2014)

American Airlines (AAL) stated that it agrees with the intent of the SNPRM (79 FR 37239, July 1, 2014). Boeing stated that it agrees with the NPRM (76 FR 30043, May 24, 2011). We infer that Boeing's comment refers to the SNPRM.

Request To Withdraw the SNPRM (79 FR 37239, July 1, 2014)

United Airlines (United Engineering) requested data to justify the release of a new AD. United Engineering stated that it has not received any reports of pilot-induced oscillations since implementation of AD 2006–23–15, Amendment 39–14827 (71 FR 66657, November 16, 2006). United Engineering stated that AD 2006–23–15 requires, among other actions, installing a control wheel damper assembly and vortex generators (vortilons) on the leading edge of the outboard main flap. United Engineering also stated that the required work is extensive and that the impact to operations and the cost of this modification is considerable.

From these statements, we infer that United Engineering requested we withdraw the SNPRM (79 FR 37239, July 1, 2014). We do not agree with the commenter's request to withdraw the SNPRM. AD 2006–23–15, Amendment 39–14827 (71 FR 66657, November 16, 2006), was considered interim action. To effectively manage the risk, the FAA determined an interim action needed to be mandated to reduce the risk, while a solution that fully addresses the unsafe condition was identified and could be implemented.

The manufacturer has identified an additional modification that is needed to correct the unsafe condition identified in AD 2006–23–15. We have determined that this design change not only corrects the unsafe condition by removing excessive airplane roll authority during landing, but it will also improve safety by making the Model 757 handling characteristics more consistent with the other Boeing airplane models. Also, even though there have only been 12 reports of unintended lateral oscillations near touchdown, the FAA considers it likely that there may have been other events that have been unrecognized and/or unreported.

Finally, in developing the compliance time for this AD, we did consider not only the safety implications of the identified unsafe condition, but also the practical aspects of an orderly modification of the fleet including the work required and the impact on operations. We have determined that it is necessary to proceed with this AD action.

Request To Delay Final Rule Pending Revised Service Information

AAL requested that we delay this final rule until Boeing releases Boeing Service Bulletin 757–27A0152, Revision 4. AAL noted that Boeing intended to release Boeing Service Bulletin 757–27A0152, Revision 4, which would address its concerns regarding certain procedures and figures in Boeing Service Bulletin 757–27A0152, Revision 1, Dated June 30, 2010.

Since the issuance of the SNPRM (79 FR 37239, July 1, 2014), Boeing has issued Service Bulletin 757–27A0152, Revision 4, dated August 26, 2014. We have revised this AD to incorporate Boeing Service Bulletin 757–27A0152, Revision 4, dated August 26, 2014, as an appropriate source of service information for accomplishing the actions required by this AD. This service bulletin includes a change to a footnote listed in Figures 15, 16, 17, 19, and 21; this footnote addresses AAL's concerns regarding certain procedures and figures in Boeing Service Bulletin 757–27A0152, Revision 1, dated June 30, 2010. Boeing Service Bulletin 757–27A0152, Revision 4, dated August 26, 2014, states that no more work is necessary on airplanes changed in accordance with Boeing Service Bulletin 757–27A0152, Revision 2, dated May 25, 2012; or Boeing Service Bulletin 757–27A0152, Revision 3, dated October 28, 2013.

We have changed paragraphs (c) and (g) of this AD to reference Boeing Service Bulletin 757–27A0152, Revision 3, dated October 28, 2013, as revised by Boeing Service Bulletin 757–27A0152, Revision 4, dated August 26, 2014.

Effect of Winglets on AD

Aviation Partners Boeing stated that the installation of winglets per Supplemental Type Certificate (STC)

ST01518SE (*http://rgl.faa.gov/Regulatory_and_Guidance_Library/rgstc.nsf/0/312bc296830a925c86257c85006d1b1f/$FILE/ST01518SE.pdf*) does not affect the accomplishment of the manufacturer's service instructions. No change is necessary to this AD in this regard.

Related Service Information Under 1 CFR Part 51

We reviewed Boeing Service Bulletin 757–27A0152, Revision 3, dated October 28, 2013, which describes procedures for installing new relays; inspecting to ensure that the new relays do not contact adjacent wire bundles, and related investigative and corrective actions if necessary; torquing the bracket assembly installation nuts and ground stud nuts; and doing bond resistance tests between the bracket assemblies and the terminal lugs on the ground studs.

We have also reviewed Boeing Service Bulletin 757–27A0152, Revision 4, dated August 26, 2014, which provides some revised text in footnotes of certain figures.

This service information is reasonably available because the interested parties have access to it through their normal course of business or by the means identified in the **ADDRESSES** section of this AD.

Conclusion

We reviewed the relevant data, considered the comments received, and determined that air safety and the public interest require adopting this AD with the changes described and minor editorial changes. We have determined that these minor changes:

- Are consistent with the intent that was proposed in the SNPRM (79 FR 37239, July 1, 2014) for correcting the unsafe condition; and
- Do not add any additional burden upon the public than was already proposed in the SNPRM (79 FR 37239, July 1, 2014).

We also determined that these changes will not increase the economic burden on any operator or increase the scope of this AD.

Costs of Compliance

We estimate that this AD affects 676 airplanes of U.S. registry.

We estimate the following costs to comply with this AD:

ESTIMATED COSTS

Action	Labor cost	Parts cost	Cost per product	Cost on U.S. operators
Installation Group 1, Configuration 1 (48 airplanes).	36 work-hours × $85 per hour = $3,060	$4,691	$7,751	$372,048.
Installation Group 2, Configuration 1 (588 airplanes).	33 work-hours × $85 per hour = $2,805	4,610	7,415	4,360,020.
Installation Group 3, Configuration 1 (12 airplanes).	33 work-hours × $85 per hour = $2,805	4,619	7,424	89,088.
Installation Group 4, Configuration 1 (24 airplanes).	33 work-hours × $85 per hour = $2,805	4,610	7,415	177,960.
Installation Group 5, Configuration 1 (4 airplanes).	36 work-hours × $85 per hour = $3,060	4,701	7,761	31,044.
Torque Bracket Assembly and Bond Tests Groups 1–5, Configuration 2 (Up to 676 airplanes).	12 work-hours × $85 per hour = $1,020	0	Up to $1,020	Up to $689,520.
General Visual Inspection Groups 1–5, Configuration 3 (Up to 676 airplanes).	7 work-hours × $85 per hour = $595	0	Up to $595	Up to $402,220.

We estimate the following costs to do any necessary repairs that would be required based on the results of the inspection. We have no way of determining the number of aircraft that might need these repairs:

ON-CONDITION COSTS

Action	Labor cost	Parts cost	Cost per product
Adjust Wire Bundle and Install Sleeve, Group 1–5, Configuration 1	1 work-hour × $85 per hour = $85	$0	$85
Inspection, Repair, and Installation Change, Group 1–5, Configuration 2	1 work-hour × $85 per hour = $85	0	85
Inspection, Repair, Installation Change, and Test, Group 1–5, Configuration 3.	5 work-hours × $85 per hour = $425	0	425

We have received no definitive data that would enable us to provide cost estimates for the parts needed for the on-condition actions specified in this AD.

Authority for This Rulemaking

Title 49 of the United States Code specifies the FAA's authority to issue rules on aviation safety. Subtitle I, section 106, describes the authority of the FAA Administrator. Subtitle VII: Aviation Programs, describes in more detail the scope of the Agency's authority.

We are issuing this rulemaking under the authority described in Subtitle VII, Part A, Subpart III, Section 44701: ''General requirements.'' Under that section, Congress charges the FAA with promoting safe flight of civil aircraft in air commerce by prescribing regulations for practices, methods, and procedures the Administrator finds necessary for safety in air commerce. This regulation is within the scope of that authority because it addresses an unsafe condition that is likely to exist or develop on products identified in this rulemaking action.

Regulatory Findings

This AD will not have federalism implications under Executive Order 13132. This AD will not have a substantial direct effect on the States, on the relationship between the national government and the States, or on the distribution of power and

responsibilities among the various levels of government.

For the reasons discussed above, I certify that this AD:

(1) Is not a ''significant regulatory action'' under Executive Order 12866,

(2) Is not a ''significant rule'' under DOT Regulatory Policies and Procedures (44 FR 11034, February 26, 1979),

(3) Will not affect intrastate aviation in Alaska, and

(4) Will not have a significant economic impact, positive or negative, on a substantial number of small entities under the criteria of the Regulatory Flexibility Act.

List of Subjects in 14 CFR Part 39

Air transportation, Aircraft, Aviation safety, Incorporation by reference, Safety.

Adoption of the Amendment

Accordingly, under the authority delegated to me by the Administrator, the FAA amends 14 CFR part 39 as follows:

PART 39—AIRWORTHINESS DIRECTIVES

■ 1. The authority citation for part 39 continues to read as follows:

Authority: 49 U.S.C. 106(g), 40113, 44701.

§ 39.13 [Amended]

■ 2. The FAA amends § 39.13 by adding the following new airworthiness directive (AD):

2015–08–01 The Boeing Company: Amendment 39–18137; Docket No. FAA–2011–0475; Directorate Identifier 2010–NM–199–AD.

(a) Effective Date

This AD is effective May 26, 2015.

(b) Affected ADs

None.

(c) Applicability

This AD applies to The Boeing Company Model 757–200, –200PF, –200CB, and –300 series airplanes; certificated in any category; as identified in Boeing Service Bulletin 757–27A0152, Revision 3, dated October 28, 2013, as revised by Boeing Service Bulletin 757–27A0152, Revision 4, dated August 26, 2014.

(d) Subject

Air Transport Association (ATA) of America Code 27, Flight Controls.

(e) Unsafe Condition

This AD was prompted by numerous reports of unintended lateral oscillations during the final approach, just before landing. We are issuing this AD to reduce the chance of unintended lateral oscillations near touchdown, which could result in loss of lateral control of the airplane, and consequent airplane damage or injury to flightcrew and passengers.

(f) Compliance

Comply with this AD within the compliance times specified, unless already done.

(g) Installation and Inspection

Within 60 months after the effective date of this AD, do the applicable actions specified in paragraph (g)(1), (g)(2), or (g)(3) of this AD.

(1) For Configuration 1 airplanes defined in Boeing Service Bulletin 757–27A0152, Revision 3, dated October 28, 2013, as revised by Boeing Service Bulletin 757–27A0152, Revision 4, dated August 26, 2014: Install three bracket assemblies and three new relays, and make changes to the wire bundles, in accordance with the Accomplishment Instructions of Boeing Service Bulletin 757–27A0152, Revision 3, dated October 28, 2013, as revised by Boeing Service Bulletin 757–27A0152, Revision 4, dated August 26, 2014.

(2) For Configuration 2 airplanes defined in Boeing Service Bulletin 757–27A0152, Revision 3, dated October 28, 2013, as revised by Boeing Service Bulletin 757–27A0152, Revision 4, dated August 26, 2014: Torque the bracket assembly nuts and ground stud nuts, do bond resistance tests to verify that bonding requirements are met, do a general visual inspection to ensure that the three new relays do not touch the adjacent wire bundles, and do all applicable related investigative and corrective actions, in accordance with the Accomplishment Instructions of Boeing Service Bulletin 757–27A0152, Revision 3, dated October 28, 2013, as revised by Boeing Service Bulletin 757–27A0152, Revision 4, dated August 26, 2014. Do all applicable related investigative and corrective actions before further flight.

(3) For Configuration 3 airplanes defined in Boeing Service Bulletin 757–27A0152, Revision 3, dated October 28, 2013, as revised by Boeing Service Bulletin 757–27A0152, Revision 4, dated August 26, 2014: Do a general visual inspection to ensure that the three new relays do not touch the adjacent wire bundles, and do all applicable related investigative and corrective actions, in accordance with the Accomplishment Instructions of Boeing Service Bulletin 757–27A0152, Revision 3, dated October 28, 2013, as revised by Boeing Service Bulletin 757–27A0152, Revision 4, dated August 26, 2014. Do all applicable related investigative and corrective actions before further flight.

(h) Credit for Previous Actions

This paragraph provides credit for actions required by paragraph (g) of this AD, if those actions were performed before the effective date of this AD using Boeing Service Bulletin 757–27A0152, Revision 2, dated May 25, 2012 (which is not incorporated by reference in this AD); or Boeing Service Bulletin 757–27A0152, Revision 3, dated October 28, 2013.

(i) Alternative Methods of Compliance (AMOCs)

(1) The Manager, Los Angeles Aircraft Certification Office (ACO), FAA, has the authority to approve AMOCs for this AD, if requested using the procedures found in 14 CFR 39.19. In accordance with 14 CFR 39.19, send your request to your principal inspector or local Flight Standards District Office, as appropriate. If sending information directly to the manager of the ACO, send it to the attention of the person identified in paragraph (j)(1) of this AD. Information may be emailed to: *9-ANM-LAACO-AMOC-Requests@faa.gov.*

(2) Before using any approved AMOC, notify your appropriate principal inspector, or lacking a principal inspector, the manager of the local flight standards district office/certificate holding district office.

(3) An AMOC that provides an acceptable level of safety may be used for any repair required by this AD if it is approved by the Boeing Commercial Airplanes Organization Designation Authorization (ODA) that has been authorized by the Manager, Los Angeles ACO, to make those findings. For a repair method to be approved, the repair must meet the certification basis of the airplane and the approval must specifically refer to this AD.

(j) Related Information

(1) For more information about this AD, contact Jeffrey Palmer, Aerospace Engineer, Systems and Equipment Branch, ANM–130L, Los Angeles Aircraft Certification Office (ACO), FAA, 3960 Paramount Boulevard, Lakewood, CA 90712–4137; phone: 562–627–5351; fax: 562–627–5210; email: *jeffrey.w.palmer@faa.gov.*

(2) Service information identified in this AD that is not incorporated by reference is available at the addresses specified in paragraphs (k)(3) and (k)(4) of this AD.

(k) Material Incorporated by Reference

(1) The Director of the Federal Register approved the incorporation by reference (IBR) of the service information listed in this paragraph under 5 U.S.C. 552(a) and 1 CFR part 51.

(2) You must use this service information as applicable to do the actions required by this AD, unless the AD specifies otherwise.

(i) Boeing Service Bulletin 757–27A0152, Revision 3, dated October 28, 2013.

(ii) Boeing Service Bulletin 757–27A0152, Revision 4, dated August 26, 2014.

(3) For Boeing service information identified in this AD, contact Boeing Commercial Airplanes, Attention: Data & Services Management, P. O. Box 3707, MC 2H–65, Seattle, WA 98124–2207; telephone 206–544–5000, extension 1; fax 206–766–5680; Internet *https://www.myboeingfleet.com.*

(4) You may view this service information at FAA, Transport Airplane Directorate, 1601 Lind Avenue SW., Renton, WA. For information on the availability of this material at the FAA, call 425–227–1221.

(5) You may view this service information that is incorporated by reference at the National Archives and Records Administration (NARA). For information on the availability of this material at NARA, call 202–741–6030, or go to: *http://www.archives.gov/federal-register/cfr/ibr-locations.html.*

Issued in Renton, Washington, on April 3, 2015.

Jeffrey E. Duven,

Manager, Transport Airplane Directorate, Aircraft Certification Service.

[FR Doc. 2015–08407 Filed 4–17–15; 08:45 am]

BILLING CODE 4910–13–P

SECURITIES AND EXCHANGE COMMISSION

17 CFR Part 232

[Release Nos. 33–9746; 34–74714; 39–2502; IC–31551]

Adoption of Updated EDGAR Filer Manual

AGENCY: Securities and Exchange Commission.

ACTION: Final rule.

SUMMARY: The Securities and Exchange Commission (the Commission) is adopting revisions to the Electronic Data Gathering, Analysis, and Retrieval System (EDGAR) Filer Manual and related rules to reflect updates to the EDGAR system. The updates are being made primarily to support the 2015 US GAAP financial reporting and 2015 EXCH taxonomies; add new form types for registration of Security-based swap data repositories (SDR); revise the Form ID Application Confirmation screen; remove references to the Paper Form ID; and revise Item 1 on submission form type MA–A. The EDGAR system was upgraded to support the new 2015 taxonomies and revised MA–A form functionalities on March 9, 2015. The EDGAR system is scheduled to be upgraded to support the other functionalities on April 13, 2015.

DATES: Effective April 20, 2015. The incorporation by reference of the EDGAR Filer Manual is approved by the Director of the Federal Register as of April 20, 2015.

FOR FURTHER INFORMATION CONTACT: In the Division of Trading and Markets, for questions concerning Form SDR and the revisions for Form MA–A, contact Kathy Bateman at (202) 551–4345, and in the Office of Information Technology, contact Tammy Borkowski at (202) 551–7208.

SUPPLEMENTARY INFORMATION: We are adopting an updated EDGAR Filer Manual, Volume I and Volume II. The Filer Manual describes the technical formatting requirements for the preparation and submission of electronic filings through the EDGAR system.[1] It also describes the requirements for filing using EDGARLink Online and the Online Forms/XML Web site.

The revisions to the Filer Manual reflect changes within Volume I entitled EDGAR Filer Manual, Volume I: ''General Information,'' Version 20 (April 2015), and Volume II entitled EDGAR Filer Manual, Volume II: ''EDGAR Filing,'' Version 30 (April 2015). The updated manual will be incorporated by reference into the Code of Federal Regulations.

The Filer Manual contains all the technical specifications for filers to submit filings using the EDGAR system. Filers must comply with the applicable provisions of the Filer Manual in order to assure the timely acceptance and processing of filings made in electronic format.[2] Filers may consult the Filer Manual in conjunction with our rules governing mandated electronic filing when preparing documents for electronic submission.[3]

The EDGAR system will be upgraded to Release 15.1 on April 13, 2015 and will introduce the following changes:

EDGAR will be updated to add new submission form types SDR, SDR/A, SDR–A, and SDR–W. These submission form types can be accessed by selecting the ''File SDR'' link on the EDGAR Filing Web site. Additionally, applicants may construct XML submissions for these submission types by following the ''EDGAR SDR XML Technical Specification'' document available on the SEC's Public Web site (*http://www.sec.gov/info/edgar.shtml*).

Submission form types SDR, SDR/A, SDR–A, and SDR–W will include the ''Request Confidentiality'' check box to allow applicants to select which information to request confidential treatment. After a Form SDR is submitted, SEC staff will review the submission and make a determination of whether the information for which confidential treatment is requested should be made public. EDGAR will disseminate only the content and attached exhibits of the submission that the SEC staff has determined to be public.

The ''Form ID Application Confirmation'' screen will display four additional labels: ''Signature of Authorized Person,'' ''Printed Name of Signature,'' ''Title of Person Signing,'' and ''Notary Signature & Seal to be Placed Here.'' This screen will also be updated to include a ''Print Window'' button to print the completed online Form ID application. The printed application can be signed and notarized by the filer to serve as the authentication document when applying for EDGAR access.

All references to the Paper Form ID have been removed from the Filer Manual. Filers can print the electronic Form ID and use this as the authentication document as explained above.

EDGAR was updated to support the 2015 US GAAP financial reporting taxonomy and the 2015 EXCH taxonomy. A complete listing of supported standard taxonomies is available on *http://www.sec.gov/info/edgar/edgartaxonomies.shtml*.

Item 1 ''Identifying Information'' on submission type MA–A was updated for the following question: ''Changes: Are there any changes in this annual update to information provided in the municipal advisor's most recent Form MA, other than the updated Execution Page?'' If filers select ''No'' as a response to the question, then all fields will be disabled on submission type MA–A with the exception of ''Execution'' and ''Filer Information'' tabs and the ''Fiscal Year End Information'' field on Item 1. Alternatively, if filers select ''Yes'' to the question, then they must update applicable items on submission type MA–A.

Along with the adoption of the Filer Manual, we are amending Rule 301 of Regulation S–T to provide for the incorporation by reference into the Code of Federal Regulations of today's revisions. This incorporation by reference was approved by the Director of the Federal Register in accordance with 5 U.S.C. 552(a) and 1 CFR part 51.

The updated EDGAR Filer Manual will be available for Web site viewing and printing; the address for the Filer Manual is *http://www.sec.gov/info/edgar.shtml.* You may also obtain paper copies of the EDGAR Filer Manual from the following address: Public Reference Room, U.S. Securities and Exchange Commission, 100 F Street NE., Washington, DC 20549, on official business days between the hours of 10:00 a.m. and 3:00 p.m.

Since the Filer Manual and the corresponding rule changes relate solely to agency procedures or practice, publication for notice and comment is not required under the Administrative

[1] We originally adopted the Filer Manual on April 1, 1993, with an effective date of April 26, 1993. Release No. 33–6986 (April 1, 1993) [58 FR 18638]. We implemented the most recent update to the Filer Manual on December 15, 2014. *See* Release No. 33–9692 (December 23, 2014) [79 FR 76878].

[2] *See* Rule 301 of Regulation S–T (17 CFR 232.301).

[3] *See* Release No. 33–9692 in which we implemented EDGAR Release 14.3. For additional history of Filer Manual rules, please see the cites therein.

Procedure Act (APA).[4] It follows that the requirements of the Regulatory Flexibility Act[5] do not apply.

The effective date for the updated Filer Manual and the rule amendments is April 20, 2015. In accordance with the APA,[6] we find that there is good cause to establish an effective date less than 30 days after publication of these rules. The EDGAR system upgrade to Release 15.1 is scheduled to become available on April 13, 2015. The Commission believes that establishing an effective date less than 30 days after publication of these rules is necessary to coordinate the effectiveness of the updated Filer Manual with the system upgrade.

Statutory Basis

We are adopting the amendments to Regulation S–T under Sections 6, 7, 8, 10, and 19(a) of the Securities Act of 1933,[7] Sections 3, 12, 13, 14, 15, 23, and 35A of the Securities Exchange Act of 1934,[8] Section 319 of the Trust Indenture Act of 1939,[9] and Sections 8, 30, 31, and 38 of the Investment Company Act of 1940.[10]

List of Subjects in 17 CFR Part 232

Incorporation by reference, Reporting and recordkeeping requirements, Securities.

Text of the Amendment

In accordance with the foregoing, Title 17, Chapter II of the Code of Federal Regulations is amended as follows:

PART 232—REGULATION S–T—GENERAL RULES AND REGULATIONS FOR ELECTRONIC FILINGS

■ 1. The authority citation for Part 232 continues to read in part as follows:

Authority: 15 U.S.C. 77f, 77g, 77h, 77j, 77s(a), 77z–3, 77sss(a), 78c(b), 78*l,* 78m, 78n, 78o(d), 78w(a), 78*ll,* 80a–6(c), 80a–8, 80a–29, 80a–30, 80a–37, and 7201 *et seq.*; and 18 U.S.C. 1350.

* * * * *

■ 2. Section 232.301 is revised to read as follows:

§ 232.301 EDGAR Filer Manual.

Filers must prepare electronic filings in the manner prescribed by the EDGAR Filer Manual, promulgated by the Commission, which sets out the technical formatting requirements for electronic submissions. The requirements for becoming an EDGAR Filer and updating company data are set forth in the updated EDGAR Filer Manual, Volume I: ''General Information,'' Version 20 (April 2015). The requirements for filing on EDGAR are set forth in the updated EDGAR Filer Manual, Volume II: ''EDGAR Filing,'' Version 30 (April 2015). Additional provisions applicable to Form N–SAR filers are set forth in the EDGAR Filer Manual, Volume III: ''N–SAR Supplement,'' Version 4 (October 2014). All of these provisions have been incorporated by reference into the Code of Federal Regulations, which action was approved by the Director of the Federal Register in accordance with 5 U.S.C. 552(a) and 1 CFR part 51. You must comply with these requirements in order for documents to be timely received and accepted. The EDGAR Filer Manual is available for Web site viewing and printing; the address for the Filer Manual is *http://www.sec.gov/info/edgar.shtml.* You can obtain paper copies of the EDGAR Filer Manual from the following address: Public Reference Room, U.S. Securities and Exchange Commission, 100 F Street NE., Washington, DC 20549, on official business days between the hours of 10:00 a.m. and 3:00 p.m. You can also inspect the document at the National Archives and Records Administration (NARA). For information on the availability of this material at NARA, call 202–741–6030, or go to: *http://www.archives.gov/federal_register/code_of_federal_regulations/ibr_locations.html.*

By the Commission.

April 13, 2015.

Brent J. Fields,

Secretary.

[FR Doc. 2015–08982 Filed 4–17–15; 8:45 am]

BILLING CODE 8011–01–P

[4] 5 U.S.C. 553(b).

[5] 5 U.S.C. 601–612.

[6] 5 U.S.C. 553(d)(3).

[7] 15 U.S.C. 77f, 77g, 77h, 77j, and 77s(a).

[8] 15 U.S.C. 78c, 78*l,* 78m, 78n, 78o, 78w, and 78*ll.*

[9] 15 U.S.C. 77sss.

[10] 15 U.S.C. 80a–8, 80a–29, 80a–30, and 80a–37.

ENVIRONMENTAL PROTECTION AGENCY

40 CFR Part 98

Mandatory Greenhouse Gas Reporting

CFR Correction

In Title 40 of the Code of Federal Regulations, Parts 96 to 99, revised as of July 1, 2014, on page 859, in § 98.244, reinstate paragraph (b)(4)(ix) to read as follows:

§ 98.244 Monitoring and QA/QC requirements.

* * * * *

(b) * * *

(4) * * *

(ix) Method 18 at 40 CFR part 60, appendix A–6.

* * * * *

[FR Doc. 2015–09121 Filed 4–17–15; 8:45 am]

BILLING CODE 1505–01–D

ENVIRONMENTAL PROTECTION AGENCY

40 CFR Part 271

[EPA–R01–RCRA–2015–0195; FRL–9926–54–Region 1]

Vermont: Final Authorization of State Hazardous Waste Management Program Revisions

AGENCY: Environmental Protection Agency (EPA).

ACTION: Direct final rule.

SUMMARY: The State of Vermont has applied to EPA for Final authorization of changes to its hazardous waste program under the Resource Conservation and Recovery Act (RCRA). EPA has determined that these changes satisfy all requirements needed to qualify for Final authorization, and is authorizing the State's changes through this direct final action.

DATES: This rule is effective on June 19, 2015 without further notice, unless EPA receives adverse written comment by May 20, 2015. If EPA receives adverse comment, we will publish a timely withdrawal in the **Federal Register** informing the public that the rule will not take effect, unless and until the public comment is considered and another final rulemaking document is issued.

ADDRESSES: Submit any comments, identified by Docket ID No. EPA–R01–RCRA–2015–0195, by one of the following methods:

- *www.regulations.gov:* Follow the on-line instructions for submitting comments.
- *Email: leitch.sharon@epa.gov.*
- *Fax:* (617) 918–0647, to the attention of Sharon Leitch.
- *Mail:* Sharon Leitch, RCRA Waste Management and UST Section, Office of Site Remediation and Restoration (OSRR07–1), US EPA Region 1, 5 Post Office Square, Suite 100, Boston, MA 02109–3912.
- *Hand Delivery:* Sharon Leitch, RCRA Waste Management and UST Section, Office of Site Remediation and Restoration (OSRR07–1), US EPA Region 1, 5 Post Office Square, 7th floor, Boston, MA 02109–3912. Such deliveries are only accepted during normal hours of operation, and special arrangements should be made for

deliveries of boxed information. Please contact Sharon Leitch at (617) 918–1647.

Instructions: Direct your comments to Docket ID No. EPA–R01–RCRA–2015–0195. EPA's policy is that all comments received will be included in the public docket without change and may be made available online at *www.regulations.gov,* including any personal information provided, unless the comment includes information claimed to be Confidential Business Information (CBI) or other information whose disclosure is restricted by statute. Do not submit information that you consider to be CBI or otherwise protected through *www.regulations.gov* or email. The *www.regulations.gov* Web site is an ''anonymous access'' system, which means EPA will not know your identity or contact information unless you provide it in the body of your comment. If you send an email comment directly to EPA without going through *www.regulations.gov* your email address will be automatically captured and included as part of the comment that is placed in the public docket and made available on the Internet. If you submit an electronic comment, EPA recommends that you include your name and other contact information in the body of your comment and with any disk or CD–ROM you submit. If EPA cannot read your comment due to technical difficulties and cannot contact you for clarification, EPA may not be able to consider your comment. Electronic files should avoid the use of special characters, any form of encryption, and be free of any defects or viruses.

Docket: All documents in the docket are listed in the *www.regulations.gov* index. Although listed in the index, some information might not be publicly available, *e.g.,* CBI or other information whose disclosure is restricted by statute. Certain other material, such as copyrighted material, might be publicly available only in hard copy form. Publicly available docket materials are available either electronically through *www.regulations.gov* or in hard copy at the EPA Region 1 Library, 5 Post Office Square, 1st floor, Boston, MA 02109–3912; by appointment only; tel: (617) 918–1990.

FOR FURTHER INFORMATION CONTACT:

Sharon Leitch, RCRA Waste Management and UST Section, Office of Site Remediation and Restoration, (Mail Code: OSRR07–1), EPA Region 1, 5 Post Office Square, Suite 100, Boston, MA 02109–3912; telephone number: (617) 918–1647; fax number (617) 918–0647; email address: *leitch.sharon@epa.gov*.

SUPPLEMENTARY INFORMATION:

A. Why are revisions to State programs necessary?

States which have received final authorization from EPA under RCRA section 3006(b), 42 U.S.C. 6926(b), must maintain a hazardous waste program that is equivalent to, consistent with, and no less stringent than the Federal program. As the Federal program changes, States must change their programs and ask EPA to authorize the changes. Changes to State programs may be necessary when Federal or State statutory or regulatory authority is modified or when certain other changes occur. Most commonly, States must change their programs because of changes to EPA's regulations in Title 40 of the Code of Federal Regulations (CFR) parts 124, 260 through 266, 268, 270, 273, and 279. When states make other changes to their regulations, it also often is appropriate for the states to seek authorization of the changes.

B. What decisions have we made in this rule?

We have concluded that Vermont's application to revise its authorized program meets all of the statutory and regulatory requirements established by RCRA. Therefore, we grant Vermont Final authorization to operate its hazardous waste program with the changes described in the authorization application. Vermont has responsibility for permitting treatment, storage, and disposal facilities (TSDFs) within its borders and for carrying out the aspects of the RCRA program covered by its revised program application, subject to the limitations of the Hazardous and Solid Waste Amendments of 1984 (HSWA). New Federal requirements and prohibitions imposed by Federal regulations that EPA promulgates under the authority of HSWA take effect in authorized States before they are authorized for the requirements. Thus, EPA will implement any such requirements and prohibitions in Vermont, including issuing permits, until the State is granted authorization to do so.

C. What is the effect of today's authorization decision?

The effect of this decision is that a facility in Vermont subject to RCRA will now have to comply with the authorized State requirements instead of the Federal requirements governing the operation of the wastewater evaporation units subject to the state regulations, in order to comply with RCRA. Vermont has enforcement responsibilities under its State hazardous waste program for violations of such program, but EPA also retains its full authority under RCRA sections 3007, 3008, 3013, and 7003, which includes, among others, authority to:

- Perform inspections, and require monitoring, tests, analyses or reports
- Enforce RCRA requirements and suspend or revoke permits
- Take enforcement actions

This action does not impose additional requirements on the regulated community because the regulations for which Vermont is being authorized by this action are already effective under state law, and are not changed by this action.

D. Why is EPA using a direct final rule?

EPA is publishing this rule without a prior proposed rule because we view this as a noncontroversial action and anticipate no adverse comment. However, in the ''Proposed Rules'' section of this **Federal Register**, we are publishing a separate document that will serve as the proposed rule to authorize the State program changes if adverse comments are received on this direct final rule. We will not institute a second comment period on this action. Any parties interested in commenting must do so at this time. Further information about commenting on this rule, see the **ADDRESSES** section of this document.

If EPA receives adverse comment, we will publish a timely withdrawal in the **Federal Register** informing the public that this direct final rule will not take effect. We would address all public comments in any subsequent final rule based on the proposed rule.

E. What has Vermont previously been authorized for?

The State of Vermont initially received Final authorization on January 7, 1985, with an effective date of January 21, 1985 (50 FR 775) to implement the RCRA hazardous waste management program. The Region published an immediate final rule for certain revisions to Vermont's program on May 3, 1993 (58 FR 26242) and reopened the comment period for these revisions on June 7, 1993 (58 FR 31911). This authorization became effective August 6, 1993 (see 58 FR 31911). The Region granted authorization for further revisions to Vermont's program on September 24, 1999 (64 FR 51702), effective November 23, 1999. On October 18, 1999 (64 FR 46174) the Region published a correction to the immediate final rule that was published on September 24, 1999. The Region granted authorization for further revisions to Vermont's program on

October 26, 2000, effective December 26, 2000 (65 FR 64164). That **Federal Register** also made a technical correction. On June 23, 2005 (70 FR 36350) the Region published an immediate final rule for additional revisions to Vermont's program. This authorization became effective on August 22, 2005. The Region granted authorization for further revisions to Vermont's program on March 16, 2007 (72 FR 12568), which became effective on May 15, 2007. The Region granted authorization for further revisions to Vermont's program on December 31, 2013 (78 FR 79615), which became effective on March 3, 2014.

F. What changes are we authorizing with today's action?

On January 16, 2015, Vermont submitted a final complete program revision application, seeking authorization for their changes in accordance with 40 CFR 271.21. Vermont is seeking authorization for regulations that the state has adopted governing the operation of wastewater evaporation units.

We are now making an immediate final decision that, subject to reconsideration only if we receive written comments that oppose this action, Vermont's hazardous waste program revisions satisfy all of the requirements necessary to qualify for Final authorization. We have determined that the Vermont requirements governing wastewater evaporation units are ''more stringent'' than federal requirements. Therefore, we grant Vermont Final authorization for the following program changes: Vermont Hazardous Waste Management Regulation (VHWMR) section 7–502(o)(8), along with the revision to the note following VHWMR section 7–502(o)(10) and the definition of wastewater evaporator unit in VHWMR section 7–103. Since Vermont regulates wastewater evaporator units under various conditions set forth in its generator treatment in tanks provisions, the analogous federal requirements are in 40 CFR 262.34.

The Final authorization of these state regulations is in addition to the previous authorization of state regulations, which remain part of the authorized program.

G. How are the revised state rules different from the federal rules and why have they been determined to be more stringent?

Wastewater evaporation units (evaporators) (as further defined by Vermont) evaporate water using heat to reduce the volume of wastewater and to concentrate hazardous wastes. Vermont regulates these units using its permit exemption for generator treatment in tanks and additional conditions designed to effectively regulate evaporators. EPA has analyzed whether the Vermont regulations are equally or more protective of human health and the environment than the federal regulations, rather than being less stringent. The Agency has determined that Vermont's regulations are more protective/stricter, thus being within the State's authority to maintain under RCRA section 3009. A Memorandum entitled ''Further Explanation of Decision'' dated February 2015, containing a more detailed analysis of this issue, has been included in the Administrative Record. Additionally, the EPA analyzed whether the stricter state regulations are ''more stringent'' or ''broader in scope''. EPA has determined that they are ''more stringent'' thus being regulations that should be federally authorized and enforced. An explanation of EPA's determinations is set forth below.

1—Determination That State Regulations Are Stricter Than the Federal Regulations

To determine whether the state regulations are stricter and not less stringent than the federal regulations, EPA has compared the state regulations to the federal regulations, including examining interpretations that have been made of the federal regulations (available in the administrative record and in RCRA Online). However, in line with the national policy: Determining Equivalency of State RCRA Hazardous Waste Programs, September 7, 2005 (Equivalency Policy), EPA has not required that the state follow the same identical approach as the federal regulations. Rather, EPA has focused, ''on whether the state requirements provide [at least] equal environmental results as the federal counterparts.'' *Id.*

At the federal level, the wastewater treatment unit (WWTU) exemption has been interpreted to cover many hazardous waste evaporators. Vermont is stricter than this federal approach in that it excludes wastewater evaporation units from being covered under its WWTU exemption. Rather, it regulates them under its more protective generator treatment in tanks exemption. Furthermore, Vermont's generator treatment in tanks exemption is more stringent than the federal exemption in that it imposes additional requirements designed to effectively regulate evaporators.

However, there may be some evaporators that do not qualify for the WWTU exemption at the federal level. EPA has assumed for purposes of today's decision that the current EPA interpretation of the federal regulations is that, at the federal level, evaporation treatment is considered to be thermal treatment and is not allowed to be conducted by generators without permits under the generator treatment in tanks exemption. Nevertheless, for the reasons explained below, EPA has determined that the Vermont regulations are stricter, not less stringent than, the federal regulations.

EPA has concluded that we should look at the overall RCRA program and assess the effect of the Vermont program across the board. In doing that, EPA has concluded that the Vermont program is stricter than any of the federal requirements with respect to wastewater evaporators. RCRA section 3009. Vermont consistently and strictly regulates all generator evaporators by imposing hazardous waste management requirements and comprehensive air emissions regulations. This approach is stricter across the board than the federal approach, and thus should be allowed consistent with the national Equivalency Policy, which emphasizes that states may take different but equally or more protective approaches.

Vermont has requirements that are comparable to permits because the Vermont regulations require the same type of tank management standards and air emission control requirements as would be included in permits. Vermont also requires every generator operating an evaporator to submit a notice and obtain review of its operation.

EPA emphasizes that this decision allows non-permitted evaporation treatment (outside of the WWTU exemption) only in Vermont. Such treatment will be allowed only because it has been federally authorized as ''functionally equivalent,'' and this federal authorization is being granted based on the strict requirements adopted by Vermont. EPA further emphasizes that this regional rulemaking has no implications for how other kinds of ''thermal treatment'' will be regulated. Generally ''thermal treatment'' is not allowed without permits under either the generator treatment in tanks (and containers) exemption or under the WWTU exemption. Here, EPA is only allowing, subject to stricter Vermont standards, the same kind of evaporation treatment that already has been allowed without permits under the WWTU exemption at the federal level and in the many states that follow the federal approach.

Finally, EPA notes that Vermont is stricter than the federal approach with

respect to any evaporators located at Treatment, Storage and Disposal Facilities (TSDFs). These evaporators must always obtain RCRA permits in Vermont, since Vermont does not allow the use of the WWTU exemption for evaporators and Vermont's treatment in tanks permit exemption for evaporators is limited to generators.

2—Determination That State Regulations Are More Stringent Rather Than Broader in Scope

State regulations that are stricter may be determined to be more stringent or broader in scope. While states are allowed to maintain both types of requirements, this determination is important because state regulations that EPA determines to be more stringent are made part of the federally authorized program and are federally enforceable. State regulations that the EPA determines to be broader in scope are not made part of the federally authorized program and thus, are not federally enforceable.

To determine whether the Vermont regulations are more stringent or broader in scope, EPA has consulted the national policy: Determining Whether State Hazardous Waste Requirements are More Stringent or Broader in Scope than the Federal RCRA Program, December 23, 2014. Included in that policy is a two-part test that Regions generally use to determine whether state provisions are more stringent or broader in scope. EPA has determined that the Vermont regulations are more stringent.

As noted in that policy, when EPA regulates hazardous waste through conditional exclusions, the federal conditions amount to a form of regulation. When a state imposes additional conditions for materials still considered to be hazardous wastes at the federal level even when the federal conditions are met, the additional state conditions do not increase the size of the regulated community. Therefore, these are considered to be a more stringent not broader in scope conditions under the first test. As noted in the Appendix to the policy, an example of this is the WWTU exemption. While EPA regulates evaporators under the WWTU exemption less strictly than Vermont, both are regulating them and the additional Vermont regulations pass the first test set forth in the policy for being considered more stringent. Evaporators that do not qualify for the WWTU exemption at the federal level are regulated at the federal level, and thus the state regulation of them is also within the scope of the federal program under the first test.

The Vermont regulations pass the second test in the policy for being considered more stringent. The federal WWTU exemption requires treatment to occur within a tank or tank system in order to prevent releases of hazardous wastes. Similarly, the state requirements for evaporators are counterparts to the federal requirement in that they seek to prevent releases. In addition, the state imposes its large quantity generator (LQG) and small quantity generator (SQG) requirements on those generators operating evaporators, counterparts to these requirements exist in the federal LQG and SQG regulations. The state regulation of evaporators is similar to when additional state regulation of CESQGs exist, which is cited in the national policy as meeting both tests for being more stringent rather than broader in scope. For those evaporators not subject to the federal WWTU exemption, the state regulations have counterparts in the federal permit regulations.

The regulations listed in Section F. above are being federally authorized and will be federally enforceable. The other previously authorized Vermont generator requirements will also be federally enforceable with respect to generator evaporators. In addition, the previously authorized full state permit requirements with respect to any evaporators at TSDFs will also be federally enforceable. Also, as previously authorized, the WWTU exemption will not apply to any evaporators in Vermont since they are excluded under the definition of WWTU adopted by Vermont.

H. Who handles permits after the authorization takes effect?

Vermont will issue permits for all the provisions for which it is authorized and will administer the permits it issues. EPA will implement and issue permits for any HSWA requirements for which Vermont is not yet authorized.

I. What is codification and is EPA codifying Vermont's hazardous waste program as authorized in this rule?

Codification is the process of placing the State's statutes and regulations that comprise the State's authorized hazardous waste program into the Code of Federal Regulations. We do this by referencing the authorized State rules in 40 CFR part 272. We reserve the amendment of 40 CFR part 272, subpart UU for this authorization of Vermont's program until a later date.

J. Administrative Requirements

The Office of Management and Budget (OMB) has exempted this action (RCRA State Authorization) from the requirements of Executive Orders 12866 (58 FR 51735, October 4, 1993) and 13563 (76 FR 3821, January 21, 2011). Therefore, this action is not subject to review by OMB. This action authorizes State requirements for the purpose of RCRA 3006 and imposes no additional requirements beyond those imposed by State law. Accordingly, this action will not have a significant economic impact on a substantial number of small entities under the Regulatory Flexibility Act (5 U.S.C. 601 *et seq.*). Because this action authorizes pre-existing requirements under State law and does not impose any additional enforceable duty beyond that required by State law, it does not contain any unfunded mandate or significantly or uniquely affect small governments, as described in the Unfunded Mandates Reform Act of 1995 (Pub. L. 104–4). For the same reason, this action also does not significantly or uniquely affect the communities of Tribal governments, as specified by Executive Order 13175 (65 FR 67249, November 9, 2000). This action will not have substantial direct effects on the States, on the relationship between the national government and the States, or on the distribution of power and responsibilities among the various levels of government, as specified in Executive Order 13132 (64 FR 43255, August 10, 1999), because it merely authorizes State requirements as part of the State RCRA hazardous waste program without altering the relationship or the distribution of power and responsibilities established by RCRA. This action also is not subject to Executive Order 13045 (62 FR 19885, April 23, 1997), because it is not economically significant and it does not make decisions based on environmental health or safety risks. This rule is not subject to Executive Order 13211, ''Actions Concerning Regulations That Significantly Affect Energy Supply, Distribution, or Use'' (66 FR 28355, May 22, 2001) because it is not a ''significant regulatory action'' as defined under Executive Order 12866.

Under RCRA 3006(b), EPA grants a State's application for authorization as long as the State meets the criteria required by RCRA. It would thus be inconsistent with applicable law for EPA, when it reviews a State authorization application, to require the use of any particular voluntary consensus standard in place of another standard that otherwise satisfies the requirements of RCRA. Thus, the requirements of section 12(d) of the National Technology Transfer and Advancement Act of 1995 (15 U.S.C.

272 note) do not apply. As required by section 3 of Executive Order 12988 (61 FR 4729, February 7, 1996), in issuing this rule, EPA has taken the necessary steps to eliminate drafting errors and ambiguity, minimize potential litigation, and provide a clear legal standard for affected conduct. EPA has complied with Executive Order 12630 (53 FR 8859, March 15, 1988) by examining the takings implications of the rule in accordance with the ''Attorney General's Supplemental Guidelines for the Evaluation of Risk and Avoidance of Unanticipated Takings'' issued under the executive order. This rule does not impose an information collection burden under the provisions of the Paperwork Reduction Act of 1995 (44 U.S.C. 3501 *et seq.*). Executive Order 12898 (59 FR 7629, Feb. 16, 1994) establishes federal executive policy on environmental justice. Its main provision directs federal agencies, to the greatest extent practicable and permitted by law, to make environmental justice part of their mission by identifying and addressing, as appropriate, disproportionately high and adverse human health or environmental effects of their programs, policies, and activities on minority populations and low-income populations in the United States. Because this rule authorizes pre-existing State rules which are at least equivalent to, and no less stringent than existing federal requirements, and imposes no additional requirements beyond those imposed by State law, and there are no anticipated significant adverse human health or environmental effects, the rule is not subject to Executive Order 12898.

The Congressional Review Act, 5 U.S.C. 801 *et seq.,* as added by the Small Business Regulatory Enforcement Fairness Act of 1996, generally provides that before a rule may take effect, the agency promulgating the rule must submit a rule report, which includes a copy of the rule, to each House of the Congress and to the Comptroller General of the United States. EPA will submit a report containing this document and other required information to the U.S. Senate, the U.S. House of Representatives, and the Comptroller General of the United States prior to publication in the **Federal Register**. A major rule cannot take effect until 60 days after it is published in the **Federal Register**. This action is not a ''major rule'' as defined by 5 U.S.C. 804(2). This action nevertheless will be effective 60 days after it is published, because it is a direct final rule.

List of Subjects in 40 CFR Part 271

Environmental protection, Hazardous waste.

Authority: This action is issued under the authority of sections 2002(a), 3006 and 7004(b) of the Solid Waste Disposal Act as amended 42 U.S.C. 6912(a), 6926, 6974(b).

Dated: March 24, 2015.

H. Curtis Spalding,

Regional Administrator, EPA Region 1.

[FR Doc. 2015–08997 Filed 4–17–15; 8:45 am]

BILLING CODE 6560–50–P

LEGAL SERVICES CORPORATION

45 CFR Part 1640

Application of Federal Law to LSC Recipients

AGENCY: Legal Services Corporation

ACTION: Final rule.

SUMMARY: This final rule updates the Legal Services Corporation (LSC or Corporation) regulation on the application of Federal law to LSC recipients. The FY 1996 appropriations act (incorporated in LSC's appropriations by reference annually thereafter) subjects LSC recipients and its employees and board members to Federal law relating to the proper use of Federal funds. This final rule provides recipients with notice of the applicable Federal laws each recipient and its employees and board members must agree to be subject to under this rule, the consequences of a violation of an applicable Federal law, and where LSC will maintain the list of applicable laws.

DATES: This final rule will be effective on May 20, 2015.

FOR FURTHER INFORMATION CONTACT: Stefanie K. Davis, Assistant General Counsel, Legal Services Corporation, 3333 K Street NW., Washington, DC 20007; (202) 295–1563 (phone), (202) 337–6519 (fax), or *sdavis@lsc.gov.*

SUPPLEMENTARY INFORMATION:

I. History of This Rulemaking

Section 504(a)(19) of LSC's FY 1996 appropriations act required LSC recipients to enter into a contract that subjected them to ''all provisions of Federal law relating to the proper use of Federal funds.'' Sec. 504(a)(19), Public Law.= 104–134, title V; 110 Stat. 1321. By its terms, a violation of Sec. 504(a)(19) renders any LSC grant or contract null and void. The provision has been incorporated by reference into each of LSC's annual appropriations act since. Accordingly, the preamble and text of this final rule continue to refer to the relevant section number of the FY 1996 appropriations act.

The Corporation first issued 45 CFR part 1640 as an interim rule in 1996 to implement Sec. 504(a)(19). 61 FR 45760, Aug. 29, 1996. The interim rule was put in place to provide immediate guidance to LSC recipients on legislation that was already in effect and carried significant penalties for noncompliance. *Id.* In the preamble to the interim rule, LSC announced that it was interpreting the statutory phrase ''all provisions of Federal law relating to the proper use of Federal funds'' to mean ''with respect to [a recipient's] LSC funds, all programs should be subject to Federal laws which address issues of waste, fraud and abuse of Federal funds.'' *Id.* LSC based its interpretation on legislative history that appeared to limit the applicable laws to those dealing with fraud, waste, and abuse of Federal funds.

In particular, LSC relied on two congressional documents to support its interpretation. First, the Corporation cited to the House Report for H.R. 2076, which was a prior effort to enact a provision similar to section 504(a)(19). The relevant language in that report stated:

> [S]ection 504(20) requires all programs receiving Federal funds to comply with Federal statutes and regulations governing *waste, fraud, and abuse of Federal funds.*

H. Rep. No. 104–196, 104th Cong., 1st Sess. 116 (July 1995) (emphasis added). Second, LSC cited section 5 of H.R. 1806, the Legal Services Reform Act of 1995, which was an unsuccessful attempt to revise the LSC Act. As an extension of his remarks introducing H.R. 1806, Rep. McCollum submitted a partial summary of the bill, including a discussion of section 5 entitled ''Application of waste, fraud, and abuse laws.'' 141 Cong. Rec. E1220–21 (daily ed. June 9, 1995). Section 5 itself was titled ''Protection Against Theft and Fraud,'' and expressly included provisions of Title 18 of the U.S. Code pertaining to criminal offenses involving the misuse of Federal funds, as well as provisions of the False Claims Act. H.R. 1806, 104th Cong., § 5 (1995).

LSC adopted the list of statutes in section 5, with one exception. Through negotiation with LSC's Office of Inspector General (OIG), LSC determined that two other criminal statutes should be included in the list. 61 FR 45760, Aug. 29, 1996. These statutes prohibit bribery of public officials and witnesses and conspiracy to defraud the United States. *Id.* at 45761.

Minor changes to the interim rule, not affecting this list, were made before the

final rule was published in 1997. 62 FR 19424–19427, Apr. 21, 1997. LSC has not revised Part 1640 since the publication of the final rule.

Since the final rule was published, Congress has amended or passed other Federal laws relating to the proper use of Federal funds. In 2014, OIG raised concerns that the § 1640.2(a)(1) list of applicable Federal laws is now under-inclusive. As an example, OIG noted the omission of 18 U.S.C. 666, which prohibits theft or bribery concerning programs receiving Federal funds and has been the basis for OIG's referrals to the Department of Justice for prosecution. Subsequently, LSC staff researched other Federal laws applicable to fraud, waste, and abuse of Federal funds. The search revealed at least two other Federal laws relating to the proper use of Federal funds currently missing from the § 1640.2(a)(1) list: 18 U.S.C. 285—Taking or using papers relating to claims, and 18 U.S.C. 1031—Major fraud against the United States.

As required by the LSC Rulemaking Protocol, LSC staff prepared an explanatory rulemaking options paper, accompanied by a proposed rule amending Part 1640. On January 22, 2015, the Operations and Regulations Committee (Committee) voted to authorize LSC to initiate rulemaking and to recommend that the LSC Board of Directors (Board) approve publishing the proposed rule. On January 24, 2015, the Board approved the proposed rule for publication in the **Federal Register** for notice and comment. LSC published the notice of the proposed rulemaking (the NPRM) in the **Federal Register** on February 3, 2015. 80 FR 5016, Feb. 3, 2015. The comment period remained open for thirty days and closed on March 5, 2015.

On April 12, 2015, the Committee considered the draft final rule for publication and voted to recommend its publication to the Board, subject to one amendment. The Committee voted to amend the language in § 1640.2(a) to explicitly state that the Board would vote at a public meeting on any proposed changes to the list of Federal laws relating to the proper use of Federal funds. The Committee made this amendment in response to a comment made during the meeting by the National Legal Aid and Defender Association (NLADA) expressing its position that proposed changes to the list should be subject to public comment prior to adoption by the Board. On April 14, 2015, the Board voted to adopt and publish the final rule as amended.

Material regarding this rulemaking is available in the open rulemaking section of LSC's Web site at *http://www.lsc.gov/about/regulations-rules/open-rulemaking.* After the effective date of the rule, those materials will appear in the closed rulemaking section at *http://www.lsc.gov/about/regulations-rules/closed-rulemaking.*

II. Section-by-Section Discussion of Comments and Regulatory Provisions

LSC received two comments during the public comment period. One comment was submitted by an LSC-funded recipient, Colorado Legal Services (CLS). The other comment was submitted by the non-LSC-funded non-profit NLADA through its Civil Policy Group and its Regulations and Policy Committee. Both commenters were generally supportive of the changes LSC proposed to Part 1640.

Proposed § 1640.1—Purpose

LSC proposed revising this section to reflect the changes to Part 1640, specifically removing the language stating that the applicable Federal laws were identified in Part 1640. LSC received no comments on this proposal.

Proposed § 1640.2—Applicable Federal Laws

LSC proposed deleting the existing § 1640.2(a)(1) list of applicable Federal laws. The contracts between the Corporation and its recipients, currently referred to as the LSC Grant Assurances, will be modified to provide recipients with a weblink to the updated list. LSC proposed a new § 1640.2(a), which states that the Corporation will maintain a public list of applicable Federal law on the Corporation's Web site. LSC stated in the preamble of the NPRM that the list would be exhaustive but did not specifically use that term in the proposed rule text.

Comment 1: NLADA and CLS both expressed concern that LSC's decision to move the list of applicable Federal laws from the rule to LSC's Web site would decrease stakeholders' ability to comment on proposed changes to the list. NLADA noted that this was the second proposal by LSC in the past year to remove a section of a regulation from the usual rulemaking process. NLADA stated: ''While we understand and support LSC's desire in this instance to avoid an unnecessary, time-consuming regulatory process, we want to confirm NLADA's very strong support'' for LSC's commitment, expressed in the 2002 rulemaking protocol, to ''conduct its rulemaking activities in a spirit of cooperative dialog with [] recipients and other interested parties.'' CLS similarly asserted that ''[a]s LSC is a program uniquely committed to protecting due process rights and protections, it should adhere to them strictly itself and provide an opportunity for comment before the list of Federal laws relating to the proper use of Federal funds by LSC recipients is modified or changed.''

Response: LSC views updating the list of applicable Federal laws to be an administrative task that does not affect the underlying substance of the rule. Updating the list does not materially change the Part 1640 requirement that recipients, and its employees and board members, comply with Federal laws relating to the proper use of Federal funds.

Although the regulation does not require notice and an opportunity for comment before submitting modifications of the list to the Board for approval, LSC remains committed to providing recipients with notice of any proposed modifications before a Board meeting. Recipients will have an opportunity to comment on the proposed modifications prior to and at the meeting where the modifications will be discussed.

Comment 2: CLS and NLADA supported LSC's decision to make the list of applicable Federal laws exhaustive. In its comment, NLADA recommended that LSC include language in the text of the rule stating that the list is exhaustive.

Response: LSC will adopt NLADA's recommendation. LSC will revise the first sentence of § 1640.2(a) to read: ''LSC will maintain an *exhaustive* list of applicable Federal laws relating to the proper use of Federal funds on its Web site and provide recipients with a link to the list in the contractual agreement.''

LSC proposed renumbering § 1640.2(a)(2) as § 1640.2(b) and revising the language for clarity and readability. No substantive changes were made to this subsection. LSC received no comments on this proposal. LSC proposed redesignating existing § 1640.2(b)(1) and (2) as § 1640.4(a) and (c) respectively.

Proposed § 1640.3—Contractual Agreement

LSC proposed revising existing § 1640.3 for clarity and readability. No substantive changes were made to this subsection. LSC received no comments on this proposal.

Proposed § 1640.4—Violation of Agreement

LSC proposed redesignating existing § 1640.2(b)(1) and (2) as § 1640.4(a) and (c) respectively. The proposed move groups each definition in existing § 1640.2(b) with each definition's consequence for violating the agreement

in existing § 1640.4. No substantive changes were made, but the text has been revised for clarity and readability throughout the section. LSC received no comments on this proposal.

List of Subjects in 45 CFR part 1640

Fraud; Grant programs—law; Legal services.

For the reasons stated in the preamble, the Legal Services Corporation revises 45 CFR part 1640 to read as follows:

PART 1640—APPLICATION OF FEDERAL LAW TO LSC RECIPIENTS

Sec.
1640.1 Purpose.
1640.2 Applicable Federal laws.
1640.3 Contractual agreement.
1640.4 Violation of agreement.

Authority: 42 U.S.C. 2996e(g).

§ 1640.1 Purpose.

The purpose of this part is to ensure that recipients use their LSC funds in accordance with Federal law related to the proper use of Federal funds. This part also provides notice to recipients of the consequences of a violation of such Federal laws by a recipient, its employees or board members.

§ 1640.2 Applicable federal laws.

(a) LSC will maintain an exhaustive list of applicable Federal laws relating to the proper use of Federal funds on its Web site and provide recipients with a link to the list in the contractual agreement. The list may be modified with the approval of the Corporation's Board of Directors at a public meeting. LSC will provide recipients with notice when the list is modified.

(b) For the purposes of this part and the laws referenced in paragraph (a) of this section, LSC is considered a Federal agency and a recipient's LSC funds are considered Federal funds provided by grant or contract.

§ 1640.3 Contractual agreement.

As a condition of receiving LSC funds, a recipient must enter into a written agreement with the Corporation that, with respect to its LSC funds, will subject the recipient to the applicable Federal laws relating to the proper use of Federal funds. The agreement must include a statement that all of the recipient's employees and board members have been informed of such Federal law and of the consequences of a violation of such law, both to the recipient and to themselves as individuals.

§ 1640.4 Violation of agreement.

(a) LSC will determine that a recipient has violated the agreement described in § 1640.3 when the recipient has been convicted of, or judgment has been entered against the recipient for, a violation of an applicable Federal law relating to the proper use of Federal funds with respect to its LSC grant or contract, by the court having jurisdiction of the matter, and any appeals of the conviction or judgment have been exhausted or the time for appeal has expired.

(b) A violation of the agreement by a recipient based on recipient conduct will result in the Corporation terminating the recipient's LSC grant or contract without need for a termination hearing. While an appeal of a conviction or judgment is pending, the Corporation may take any necessary steps to safeguard its funds.

(c) LSC will determine that the recipient has violated the agreement described in § 1640.3 when an employee or board member of the recipient has been convicted of, or judgment has been entered against the employee or board member for, a violation of an applicable Federal law relating to the proper use of Federal funds with respect to the recipient's grant or contract with LSC, by the court having jurisdiction of the matter, and any appeals of the conviction or judgment have been exhausted or the time for appeal has expired, and the Corporation finds that the recipient has knowingly or through gross negligence allowed the employee or board member to engage in such activities.

(d) A violation of the agreement by the recipient based on employee or board member conduct will result in the Corporation terminating the recipient's LSC grant or contract. Prior to termination, the Corporation will provide notice and an opportunity to be heard for the sole purpose of determining whether the recipient knowingly or through gross negligence allowed the employee or board member to engage in the activities leading to the conviction or judgment. While an appeal of a conviction or judgment or a hearing is pending, the Corporation may take any necessary steps to safeguard its funds.

Dated: April 15, 2015.

Stefanie K. Davis,

Assistant General Counsel.

[FR Doc. 2015–08974 Filed 4–17–15; 8:45 am]

BILLING CODE 7050–01–P

DEPARTMENT OF DEFENSE

Defense Acquisition Regulations System

[Docket Number DARS–2015–0018]

48 CFR Parts 205, 206, 208, 210, 213, 215, and 216

Defense Federal Acquisition Regulation Supplement; Technical Amendments

AGENCY: Defense Acquisition Regulations System, Department of Defense (DoD).

ACTION: Final rule.

SUMMARY: DoD is making technical amendments to the Defense Federal Acquisition Regulation Supplement (DFARS) to provide needed editorial changes.

DATES: Effective April 20, 2015.

FOR FURTHER INFORMATION CONTACT: Mr. Manuel Quinones, Defense Acquisition Regulations System, OUSD(AT&L)DPAP(DARS), Room 3B941, 3060 Defense Pentagon, Washington, DC 20301–3060. Telephone 571–372–6088; facsimile 571–372–6094.

SUPPLEMENTARY INFORMATION: This final rule amends the DFARS as follows:

1. Directs contracting officers to additional procedures and guidance by adding references at—

- DFARS 205.205.205–71 to DFARS Procedures, Guidance and Information (PGI) 206.302–1(d);
- DFARS 206.000 to PGI 206.000;
- DFARS 206.302–1(d) to PGI 206.302–1(d);
- DFARS 206.303–2 to PGI 206.303–2(b)(i);
- DFARS 206.304(a)(S–70) to PGI 206.304(a)(S–70);
- DFARS 208.405–6 to PGI 208.405–6;
- DFARS 210.002 to PGI 210.002(e)(ii);
- DFARS 213.104 to PGI 213.104;
- DFARS 213.500–70 to PGI 215.371–2;
- DFARS 213.501 to PGI 206.304(a)(S–70);
- DFARS 215.371–2 to PGI 215.371–2; and
- DFARS 216.505(b)(2) to PGI 216.505(b)(2).

2. Revises paragraph structure of sections 210.002 and 215.371–2.

List of Subjects in 48 CFR Parts 205, 206, 208, 210, 213, 215, and 216

Government procurement.

Manuel Quinones,

Editor, Defense Acquisition Regulations System.

Therefore, 48 CFR parts 205, 206, 208, 210, 213, 215, and 216 are amended as follows:

■ 1. The authority citation for 48 CFR parts 205, 208, 210, 213, 215, and 216 continues to read as follows:

Authority: 41 U.S.C. 1303 and 48 CFR chapter 1.

PART 205—PUBLICIZING CONTRACT ACTIONS

■ 2. Add section 205.205–71 to read as follows:

205.205–71 Only one responsible source.

Follow the procedures at PGI 206.302–1(d) prior to soliciting a proposal without providing for full and open competition under the authority at FAR 6.302–1.

PART 206—COMPETITION REQUIREMENTS

■ 3. Revise the authority citation for 48 CFR part 206 to read as follows:

Authority: 41 U.S.C. 1303 and 48 CFR chapter 1.

■ 4. Add section 206.000 to read as follows:

206.000 Scope of part.

For information on the various approaches that may be used to competitively fulfill DoD requirements, see PGI 206.000.

■ 5. Amend section 206.302–1 by adding paragraph (d) to read as follows:

206.302–1 Only one responsible source and no other supplies or services will satisfy agency requirements.

* * * * *

(d) *Limitations.* Follow the procedures at PGI 206.302–1(d) prior to soliciting a proposal without providing for full and open competition under this authority.

■ 6. Add section 206.303–2 to read as follows:

206.303–2 Content.

(b)(i) Include the information required by PGI 206.303–2(b)(i) in justifications citing the authority at FAR 6.302–1.

■ 7. Amend section 206.304(a) by adding a new paragraph (S–70) to read as follows:

206.304 Approval of the justification.

(a)(4) * * *

(S–70) For a noncompetitive follow-on acquisition to a previous award for the same supply or service supported by a justification for other than full and open competition citing the authority at FAR 6.302–1, follow the procedures at PGI 206.304(a)(S–70).

PART 208—REQUIRED SOURCES OF SUPPLIES AND SERVICES

■ 8. Add section 208.405–6 to read as follows:

208.405–6 Limiting sources.

For an order or blanket purchase agreement (BPA) exceeding the simplified acquisition threshold that is a follow-on to an order or BPA for the same supply or service previously issued based on a limiting sources justification citing the authority at FAR 8.405–6(a)(1)(i)(B) or (C), follow the procedures at PGI 208.405–6.

PART 210—MARKET RESEARCH

■ 9. Revise section 210.002 to read as follows:

210.002 Procedures.

(e)(i) When contracting for services, see PGI 210.070 for the ''Market Research Report Guide for Improving the Tradecraft in Services Acquisition''.

(ii) See PGI 210.002(e)(ii) regarding potential offerors that express an interest in an acquisition.

PART 213—SIMPLIFIED ACQUISITION PROCEDURES

■ 10. Add section 213.104 to read as follows:

213.104 Promoting competition.

For information on the various approaches that may be used to competitively fulfill DoD requirements, see PGI 213.104.

■ 11. Add subpart 213.5 to read as follows:

Subpart 213.5—Test Program for Certain Commercial Items

Sec.
213.500–70 Only one offer.
213.501 Special documentation requirement.

Subpart 213.5—Test Program for Certain Commercial Items

213.500–70 Only one offer.

If only one offer is received in response to a competitive solicitation issued using simplified acquisition procedures authorized under FAR subpart 13.5, follow the procedures at PGI 215.371–2.

213.501 Special documentation requirements.

(a) *Sole source (including brand name) acquisitions.* For noncompetitive follow-on acquisitions of supplies or services previously awarded on a noncompetitive basis, include the additional documentation required by PGI 206.303–2(b)(i) and follow the procedures at PGI 206.304(a)(S–70).

PART 215—CONTRACTING BY NEGOTIATION

■ 12. Revise 215.371–2 to read as follows:

215.371–2 Promote competition.

Except as provided in sections 215.371–4 and 215.371–5—

(a) If only one offer is received when competitive procedures were used and the solicitation allowed fewer than 30 days for receipt of proposals, the contracting officer shall—

(1) Consult with the requiring activity as to whether the requirements document should be revised in order to promote more competition (see FAR 6.502(b) and 11.002); and

(2) Resolicit, allowing an additional period of at least 30 days for receipt of proposals; and

(b) For competitive solicitations in which more than one potential offeror expressed an interest in an acquisition, but only one offer was ultimately received, follow the procedures at PGI 215.371–2.

PART 216—TYPES OF CONTRACTS

216.505 [Amended]

■ 13. Amend section 216.505 by adding paragraph (b)(2) to read as follows:

216.505 Ordering.

* * * * *

(b)(2) *Exceptions to the fair opportunity process.* For an order exceeding the simplified acquisition threshold, that is a follow-on to an order previously issued for the same supply or service based on a justification for an exception to fair opportunity citing the authority at FAR 16.505(b)(2)(i)(B) or (C), follow the procedures at PGI 216.505(b)(2).

[FR Doc. 2015–08975 Filed 4–17–15; 8:45 am]

BILLING CODE 5001–06–P

Proposed Rules

Federal Register
Vol. 80, No. 75
Monday, April 20, 2015

This section of the FEDERAL REGISTER contains notices to the public of the proposed issuance of rules and regulations. The purpose of these notices is to give interested persons an opportunity to participate in the rule making prior to the adoption of the final rules.

NUCLEAR REGULATORY COMMISSION

10 CFR Parts 50 and 52

[NRC–2015–0095]

RIN 3150–AH42

Alternate Risk-Informed Approach for Addressing the Effects of Debris on Post-Accident Long-Term Core Cooling

AGENCY: Nuclear Regulatory Commission.

ACTION: Draft regulatory guide; request for comment.

SUMMARY: The U.S. Nuclear Regulatory Commission (NRC) is issuing for public comment draft regulatory guide (DG), DG–1322, ''Alternate Risk-Informed Approach for Addressing the Effects of Debris On Post-Accident Long-Term Core Cooling.'' This DG proposes new guidance that describes methods and procedures that the NRC staff considers acceptable for complying with a voluntary, risk-informed alternative in a proposed revision of the NRC's regulation governing the design of emergency core cooling systems (ECCS).

DATES: Submit comments by July 6, 2015. Comments received after this date will be considered if it is practical to do so, but the NRC is able to ensure consideration only for comments received on or before this date. Although a time limit is given, comments and suggestions in connection with items for inclusion in guides currently being developed or improvements in all published guides are encouraged at any time.

ADDRESSES: You may submit comments by any of the following methods (unless this document describes a different method for submitting comments on a specified subject):

- *Federal Rulemaking Web site:* Go to *http://www.regulations.gov* and search for Docket ID NRC–2015–0095. Address questions about NRC dockets to Carol Gallagher; telephone: 301–415–3463; email: *Carol.Gallagher@nrc.gov.* For technical questions, contact the individual(s) listed in the **FOR FURTHER INFORMATION CONTACT** section of this document.
- *Mail comments to:* Cindy Bladey, Office of Administration, Mail Stop: OWFN–12H08, U.S. Nuclear Regulatory Commission, Washington, DC 20555–0001.

For additional direction on accessing information and submitting comments, see ''Obtaining Information and Submitting Comments'' in the **SUPPLEMENTARY INFORMATION** section of this document.

FOR FURTHER INFORMATION CONTACT: Steven A. Laur, telephone: 301–415–1465, email: *Steven.Laur@nrc.gov,* and Steve Burton, telephone: 301–415–7000, email: *Stephen.Burton@nrc.gov.* Both are staff of the U.S. Nuclear Regulatory Commission, Washington, DC 20555–0001.

SUPPLEMENTARY INFORMATION:

I. Obtaining Information and Submitting Comments

A. Obtaining Information

Please refer to Docket ID NRC–2015–0095 when contacting the NRC about the availability of information regarding this document. You may obtain publically-available information related to this document by any of the following methods:

- *Federal Rulemaking Web site:* Go to *http://www.regulations.gov* and search for Docket ID NRC–2015–0095.
- *NRC's Agencywide Documents Access and Management System (ADAMS):* You may obtain publicly-available documents online in the ADAMS Public Documents collection at *http://www.nrc.gov/reading-rm/adams.html.* To begin the search, select ''ADAMS Public Documents'' and then select ''*Begin Web-based ADAMS Search.''* For problems with ADAMS, please contact the NRC's Public Document Room (PDR) reference staff at 1–800–397–4209, 301–415–4737, or by email to *pdr.resource@nrc.gov.* The ADAMS accession number for each document referenced (if it available in ADAMS) is provided the first time that a document is referenced. The DG is electronically available in ADAMS under Accession No. ML15023A025.
- *NRC's PDR:* You may examine and purchase copies of public documents at the NRC's PDR, Room O1–F21, One White Flint North, 11555 Rockville Pike, Rockville, Maryland 20852.

B. Submitting Comments

Please include Docket ID NRC–2015–0095 in the subject line of your comment submission, in order to ensure that the NRC is able to make your comment submission available to the public in this docket.

The NRC cautions you not to include identifying or contact information that you do not want to be publicly disclosed in your comment submission. The NRC posts all comment submissions at *http://www.regulations.gov* as well as entering the comment submissions into ADAMS. The NRC does not routinely edit comment submissions to remove identifying or contact information.

If you are requesting or aggregating comments from other persons for submission to the NRC, then you should inform those persons not to include identifying or contact information that they do not want to be publicly disclosed in their comment submission. Your request should state that the NRC does not routinely edit comment submissions to remove such information before making the comment submissions available to the public or entering the comment submissions into ADAMS.

II. Additional Information

The NRC is issuing for public comment a DG in the NRC's ''Regulatory Guide'' series. This series was developed to describe and make available to the public information regarding methods that are acceptable to the NRC staff for implementing specific parts of the NRC's regulations, techniques that the staff uses in evaluating specific problems or postulated accidents, and data that the staff needs in its review of applications for permits and licenses.

The DG, entitled, ''Alternate Risk-Informed Approach for Addressing the Effects of Debris On Post-Accident Long-Term Core Cooling,'' is a proposed new guide temporarily identified by its task number, DG–1322. This DG–1322 proposes new guidance that describes methods and procedures that the staff considers acceptable for complying with a voluntary, risk-informed alternative in a proposed revision of the NRC's regulation governing the design of ECCS, section 50.46c of Title 10 of the

Code of Federal Regulations (10 CFR), ''Emergency core cooling system performance during loss-of-coolant accidents (LOCA),'' with respect to the effects of debris during long-term cooling.

The voluntary alternative was included in the proposed 10 CFR 50.46c rule at the direction of the Commission in the Staff Requirements Memorandum (SRM) regarding SECY–12–0093 ''Closure Options for Generic Safety Issue—191, Assessment of Debris Accumulation on Pressurized-Water Reactor Sump Performance,'' and in the SRM regarding SECY–12–0034 ''Proposed Rulemaking—10 CFR 50.46c: Emergency Core Cooling System Performance During Loss-of-Coolant Accidents (RIN 3150–AH42).'' This guide is intended to provide a consistent approach for licensees to use when performing a risk assessment of the complex phenomena associated with debris generation and transport, and the resulting effect on long-term core cooling.

III. Backfitting and Issue Finality

This DG, if finalized, would not constitute backfitting as defined in § 50.109 (the Backfit Rule), and would not be otherwise inconsistent with the issue finality provisions in 10 CFR part 52, ''Licenses, Certifications and Approvals for Nuclear Power Plants.'' The NRC published a proposed revision of 10 CFR 50.46c on March 24, 2014 (79 FR 16106). The proposed rule includes the option of allowing an applicant or licensee to address the effects of debris on longterm cooling with respect to ECCS performance requirements in § 50.46c and GDC–35 using a risk-informed approach. The proposed rule would also allow applicants and licensees who select the option to use the same approach in demonstrating compliance with GDC–38 and GDC–41. This DG provides guidance on one possible means for implementing that option. The proposed guidance does not exceed the scope of the proposed rule. Therefore, the backfitting and issue finality discussion for the proposed rule applies to this DG, and further consideration and discussion of backfitting and issue finality for the DG is not necessary.

Dated at Rockville, Maryland, this 13th day of April 2015.

For the Nuclear Regulatory Commission.

Harriet Karagiannis,

Acting Chief, Regulatory Guidance and Generic Issues Branch, Division of Engineering, Office of Nuclear Regulatory Research.

[FR Doc. 2015–08964 Filed 4–17–15; 8:45 am]

BILLING CODE 7590–01–P

EQUAL EMPLOYMENT OPPORTUNITY COMMISSION

29 CFR Part 1630

RIN 3046–AB01

Amendments to Regulations Under the Americans With Disabilities Act

AGENCY: Equal Employment Opportunity Commission.

ACTION: Proposed rule.

SUMMARY: The Equal Employment Opportunity Commission (''EEOC'' or ''Commission'') is issuing a proposed rule that would amend the regulations and interpretive guidance implementing Title I of the Americans with Disabilities Act (ADA) as they relate to employer wellness programs. The proposed rule amends the ADA regulations to provide guidance on the extent to which employers may use incentives to encourage employees to participate in wellness programs that include disability-related inquiries and/or medical examinations.

DATES: Comments regarding this proposal must be received by the Commission on or before June 19, 2015. Please see the sections below entitled **ADDRESSES** and **SUPPLEMENTARY INFORMATION** for additional information on submitting comments.

ADDRESSES: You may submit comments, identified by *RIN number* 3046–AB01, by any of the following methods:

- *Federal eRulemaking Portal: http://www.regulations.gov.* Follow the instructions for submitting comments.
- *Fax:* (202) 663–4114. (There is no toll free FAX number). Only comments of six or fewer pages will be accepted via FAX transmittal, in order to assure access to the equipment. Receipt of FAX transmittals will not be acknowledged, except that the sender may request confirmation of receipt by calling the Executive Secretariat staff at (202) 663–4070 (voice) or (202) 663–4074 (TTY). (These are not toll free numbers).
- *Mail:* Bernadette B. Wilson, Acting Executive Officer, Executive Secretariat, Equal Employment Opportunity Commission, U.S. Equal Employment Opportunity Commission, 131 M Street NE., Washington, DC 20507.
- *Hand Delivery/Courier:* Bernadette Wilson, Acting Executive Officer, Executive Secretariat, Equal Employment Opportunity Commission, U.S. Equal Employment Opportunity Commission, 131 M Street NE., Washington, DC 20507.

Instructions: The Commission invites comments from all interested parties. All comment submissions must include the agency name and docket number or the Regulatory Information Number (RIN) for this rulemaking. Comments need be submitted in only one of the above-listed formats. All comments received will be posted without change to *http://www.regulations.gov,* including any personal information you provide.

Docket: For access to the docket to read background documents or comments received, go to *http://www.regulations.gov*. Copies of the received comments also will be available for review at the Commission's library, 131 M Street NE., Suite 4NW08R, Washington, DC 20507, between the hours of 9:30 a.m. and 5:00 p.m., from June 19, 2015 until the Commission publishes the rule in final form.

FOR FURTHER INFORMATION CONTACT: Christopher J. Kuczynski, Assistant Legal Counsel, (202) 663–4665, or Joyce Walker-Jones, Senior Attorney Advisor, at (202) 663–7031, or (202) 663–7026 (TTY), Office of Legal Counsel, U.S. Equal Employment Opportunity Commission. (These are not toll free numbers.) Requests for this notice in an alternative format should be made to the Office of Communications and Legislative Affairs at (202) 663–4191 (voice) or (202) 663–4494 (TTY). (These are not toll free numbers.)

SUPPLEMENTARY INFORMATION:

Introduction

The Equal Employment Opportunity Commission (''EEOC'' or ''Commission'') is issuing a proposed rule that would amend the regulations and interpretive guidance implementing Title I of the Americans with Disabilities Act (ADA) as they relate to employer wellness programs. Congress enacted the ADA in 1990 to prohibit discrimination against individuals with disabilities. The EEOC issued implementing regulations in 1991 to provide additional guidance on the law's requirements and prohibited practices with respect to employment.[1]

[1] The citations in this proposed rule are to the 2011 regulations. In 2011, EEOC issued amended regulations to revise the definition of disability and other provisions to conform to changes to the ADA made by the ADA Amendments Act of 2008, but

Continued

This proposed rule provides guidance on the extent to which the ADA permits employers to offer incentives to employees to promote participation in wellness programs that are employee health programs.[2] It does not apply to similar types of programs that may be provided by entities other than those subject to Title I of the ADA, such as social service agencies covered under Title II of the ADA, 42 U.S.C. 12131 *et seq.,* or places of public accommodation subject to Title III of the ADA, 42 U.S.C. 12181 *et seq.,* who may provide similar programs to individuals who are considered volunteers.[3]

A wellness program may be part of a group health plan or may be offered outside of a group health plan.[4] The references in the proposed rule regarding the requirement to provide a notice and the use of incentives, and changes to the corresponding section of the interpretive guidance, apply only to wellness programs that are part of or provided by a group health plan or by a health insurance issuer offering group health insurance in connection with a group health plan.[5] The term ''group health plan'' includes both insured and self-insured group health plans and is used interchangeably with the term ''health plan'' throughout the preamble. All of the other proposed changes to the regulations apply to all ''health programs,'' which include wellness programs whether or not they are offered as part of or outside of a group health plan or group health insurance coverage. The term ''incentives'' includes both financial and in-kind incentives, such as time-off awards, prizes, or other items of value.

Discussion

As a means of attempting to improve employees' health and reduce health care costs, many employers that provide health coverage also offer employee health programs and activities to promote healthier lifestyles or prevent disease.[6] Commonly referred to as workplace wellness programs, these programs may include, for example: nutrition classes, onsite exercise facilities, weight loss and smoking cessation programs, and/or coaching to help employees meet health goals. Wellness programs also may incorporate health risk assessments and biometric screenings that measure an employee's health risk factors, such as body weight and cholesterol, blood glucose, and blood pressure levels.[7] Some employers offer incentives to encourage employees simply to participate in a wellness program, while others offer incentives based on whether employees achieve certain health outcomes.[8] Incentives can be framed as rewards or penalties and often take the form of prizes, cash, or a reduction or increase in health care premiums or cost sharing. Of the employers who offer incentives to complete wellness programs, the majority use incentives totaling less than $500 per year.[9]

Employee health programs offered by employers must comply with laws enforced by the EEOC, including Title I of the Americans with Disabilities Act (ADA) which restricts the medical information employers may obtain from applicants and employees and makes it illegal to discriminate against individuals based on disability.[10] They also must comply with other laws EEOC enforces that prohibit discrimination based on race, color, sex (including pregnancy), national origin, religion, compensation, age, or genetic information.[11] Additionally, wellness programs that are part of group health plans must comply with the requirements of the Health Insurance Portability and Accountability Act of 1996 (HIPAA), as amended by the Patient Protection and Affordable Care Act (''Affordable Care Act'')[12]—set forth in regulations jointly issued by the Department of Labor (DOL), Department of the Treasury, and Department of Health and Human Services (HHS)—that generally prohibit discrimination in group health plans based on any health factor.[13]

The laws relevant to this proposed rule are discussed below.

HIPAA's Nondiscrimination Provisions

HIPAA's nondiscrimination provisions, as amended by the Affordable Care Act, generally prohibit group health plans and health insurance issuers offering group health insurance in connection with a group health plan from discriminating against participants and beneficiaries in premiums, benefits, or eligibility based on a health factor.[14]

did not amend the provisions concerning disability-related inquiries and medical examinations of employees at 29 CFR 1630.14 that affect employee health programs. Some of the other revisions, however, resulted in renumbering.

[2] The ADA provides that, ''[a] covered entity may conduct voluntary medical examinations and inquiries, including voluntary medical histories, which are part of an employee health program available to employees at that work site.'' 42 U.S.C. 12112(d)(4)(B)(emphasis added). As referenced in this proposed rule, wellness programs are ''employee health programs.''

[3] This proposed rule also does not address the extent to which Title II of the Genetic Information Nondiscrimination Act (GINA) of 2008, 42 U.S.C. 2000ff, *et seq.,* affects an employer's ability to condition incentives on a family member's participation in a wellness program. This issue will be addressed in future EEOC rulemaking.

[4] The term ''group health plan'' is defined in ERISA section 733(a). An employer may establish or maintain more than one group health plan.

[5] This proposed rule asks for comments on whether employers offer (or are likely to offer in the future) wellness programs outside of a group health plan or group health insurance coverage that use incentives to promote participation in such programs or to encourage employees to achieve certain health outcomes and whether EEOC should issue regulations specifically limiting incentives provided as part of such programs.

[6] *See* Rand Health, Workplace Wellness Programs Study Final Report (2013), sponsored by the U.S. Departments of Labor and Health and Human Services, available at *http://www.rand.org/content/dam/rand/pubs/research_reports/RR200/RR254/RAND_RR254.pdf* [hereinafter referred to as the RAND Final Report]*; see also* The Kaiser Family Foundation and Health Research & Educational Trust 2014 Employer Health Benefits Survey, available at *http://kff.org/health-costs/report/2014-employer-health-benefits-survey/* [hereinafter referred to as the Kaiser Survey].

[7] *Id.*

[8] According to the RAND Final Report, 69 percent of employers with at least 50 employees offer financial incentives to encourage employee participation, while 10 percent offer incentives tied to health outcomes. By contrast, the Kaiser Survey found that 36 percent of large employers with 200 or more employees and 18 percent of smaller employers offer financial incentives to participate in a wellness program.

[9] According to the Kaiser Survey, 68 percent of all large firms that offered an incentive for the completion of a wellness program used a maximum incentive below $500.

[10] 42 U.S.C. 12101 *et seq.*

[11] *See* Title VII of the Civil Rights Act of 1964, 42 U.S.C. 2000e *et seq.;* the Equal Pay Act of 1963, 29 U.S.C. 206(d); the Age Discrimination in Employment Act (ADEA) of 1967, 29 U.S.C. 621 *et seq.;* and Title II of GINA. However, this proposed rule concerns only the application of the ADA's rules limiting disability-related inquiries and medical examinations of employees to employer-sponsored wellness programs. Compliance with the limits on incentives in this proposed rule does not necessarily result in compliance with other nondiscrimination laws or other parts of the ADA. For example, as the interpretive guidance accompanying the proposed rule explains, even if an employer's wellness program complies with the incentive limits set forth in the ADA regulations, the employer violates Title VII or the ADEA if that program discriminates on the basis of race, sex, national origin, or age.

[12] The Patient Protection and Affordable Care Act, Public Law 111–148, and the Health Care and Education Reconciliation Act, Pub. L. 111–152, are known collectively as the Affordable Care Act. Section 1201 of the Affordable Care Act amended and moved the nondiscrimination and wellness provisions of the Public Health Service (PHS) Act from section 2702 to section 2705, and extended the nondiscrimination provisions to the individual market. The Affordable Care Act also added section 715(a)(1) to ERISA and section 9815(a)(1) to the Code to incorporate the provisions of part A of title XXVII of the PHS Act, including PHS Act section 2705, into ERISA and the Code and make them applicable to group health plans and group health insurance issuers.

[13] A wellness program that is part of a group health plan also must comply with HIPAA's Privacy, Security, and Breach Notification requirements set forth at 45 CFR part 160 and part 164. These requirements are discussed later in this preamble.

[14] The HIPAA nondiscrimination provisions set forth eight health status-related factors, which the December 13, 2006 final regulations refer to as

An exception to the general rule allows premium discounts or rebates or modification to otherwise applicable cost sharing (including copayments, deductibles, or coinsurance) in return for adherence to certain programs of health promotion and disease prevention.[15]

HIPAA's nondiscrimination provisions, as amended by the Affordable Care Act, and the 2013 final regulations issued by the Departments of Labor, Treasury, and HHS, discuss two types of wellness programs: Participatory and health-contingent. Participatory wellness programs either do not provide a reward or do not include any conditions for obtaining a reward that are based on an individual satisfying a standard related to a health factor. Examples in the final regulations include: A program that reimburses employees for all or part of the cost for membership in a fitness center; a program that reimburses employees for the costs of participating, or that otherwise provides a reward for participating, in a smoking cessation program without regard to whether the employee quits smoking; and a program that provides a reward to employees who complete a health risk assessment (HRA) regarding current health status, without any further action (educational or otherwise) required by the employee with regard to the health issues identified as part of the assessment. The 2013 final regulations state that participatory wellness programs are permissible under the HIPAA nondiscrimination requirements provided they are made available to all similarly situated individuals.

Health-contingent wellness programs, which may be either activity-only or outcome-based, require individuals to satisfy a standard related to a health factor to obtain a reward (or require an individual to undertake more than a similarly situated individual based on a health factor in order to obtain the same reward). Activity-only programs require individuals to perform or complete an activity related to a health factor in order to obtain a reward, but do not require an individual to attain or maintain a specific health outcome. Outcome-based programs require individuals to attain or maintain a specific health outcome (such as not smoking or attaining certain results on biometric screenings) in order to obtain a reward.

There are five requirements for health-contingent wellness programs under the Public Health Service (PHS) Act section 2705 and the 2013 final regulations.[16] First, all individuals eligible for a health-contingent wellness program must be given the opportunity to qualify for the reward at least once per year. Second, the total reward offered to an individual under all health-contingent wellness programs with respect to a plan cannot exceed 30 percent of the total cost of employee-only coverage under the plan, including both employee and employer contributions towards the cost of coverage (or 50 percent to the extent that the additional percentage is attributed to tobacco prevention or reduction). Third, health-contingent wellness programs must be reasonably designed to promote health or prevent disease. Fourth, the full reward under a health-contingent wellness program must be available to all similarly situated individuals. For this purpose, an activity-only program must allow a reasonable alternative standard (or waiver of the otherwise applicable standard) for obtaining the reward for any individual for whom, for that period, it is unreasonably difficult due to a medical condition to satisfy the otherwise applicable standard, and for any individual for whom, for that period, it is medically inadvisable to attempt to satisfy the otherwise applicable standard. An outcome-based program must allow a reasonable alternative standard (or waiver of the otherwise applicable standard) for obtaining the reward to any individual who does not meet the initial standard based on a measurement, test, or screening. Fifth, plans and issuers must disclose the availability of a reasonable alternative standard to qualify for the reward in all plan materials describing the terms of a health-contingent wellness program and in any disclosure that an individual did not satisfy an initial outcome-based standard.

The 2013 final regulations recognize that compliance with HIPAA nondiscrimination rules (as amended by the Affordable Care Act), including the wellness program requirements, is not determinative of compliance with any other provision of any other state or federal law, including, but not limited to, the ADA, Title VII of the Civil Rights Act of 1964 (Title VII), and the Genetic Information Nondiscrimination Act (GINA).[17]

Title I of the ADA

Title I of the ADA prohibits discrimination against individuals on the basis of disability "in regard to . . . employment compensation . . . and other terms, conditions, and privileges of employment," including "fringe benefits available by virtue of employment, whether or not administered by the covered entity."[18]

"health factors." Under HIPAA and the 2006 regulations, as well as under the Public Health Service (PHS) Act section 2705 (as added by the Affordable Care Act), the eight health factors are health status, medical condition (including both physical and mental illnesses), claims experience, receipt of health care, medical history, genetic information, evidence of insurability (including conditions arising out of acts of domestic violence), and disability. 71 FR 75014 (Dec. 13, 2006). In the view of the Departments of Labor, HHS, and the Treasury, "[t]hese terms are largely overlapping and, in combination, include any factor related to an individual's health." 66 FR 1379 (January 8, 2001).

[15] Prior to the enactment of the Affordable Care Act, HIPAA added section 9802 of the Internal Revenue Code, section 702 of the Employee Retirement Income Security Act (ERISA), and section 2702 of the PHS Act. DOL, Treasury, and HHS issued joint final regulations in 2006 regarding wellness programs in connection with a group health plan or group health insurance coverage under which any of the conditions for obtaining a reward is based on satisfying a standard related to a health factor. *See* 26 CFR 54.9802–1(f); 29 CFR 2590.702(f); 45 CFR 146.121(f). Paragraph (f)(2) of the 2006 regulations limited the total reward for such wellness programs to 20 percent of the total cost of coverage under the plan. The Affordable Care Act amended the PHS Act to raise the limitation on incentives to 30 percent of the total cost of coverage under the plan. *See* PHS Act section 2705(j)(3)(A). The DOL, IRS, and HHS issued final regulations in June 2013 to implement PHS Act section 2705 and amend the 2006 HIPAA regulations regarding nondiscriminatory wellness programs in group health coverage. 78 FR 33158 (June 3, 2013). Under the 2013 final regulations on nondiscriminatory wellness programs, references to "a plan providing a reward include both providing a reward (such as a discount or rebate of a premium or contribution, a waiver of all or part of a cost-sharing mechanism, an additional benefit, or any financial or other incentive) and imposing a penalty (such as a surcharge or other financial or nonfinancial disincentive)."

[16] For the requirements applicable to activity-only programs, *see* 26 CFR 54.9802–1(f)(3), 29 CFR 2590.702(f)(3), and 45 CFR 146.121(f)(3). For requirements applicable to outcome-based programs, *see* 26 CFR 54.9802–1(f)(4), 29 CFR 2590.702(f)(4), and 45 CFR 146.121(f)(4).

[17] *See* 78 FR at 33168 ("The Departments recognize that many other laws may regulate plans and issuers in their provision of benefits to participants and beneficiaries. These laws include, but are not limited to, the ADA, Title VII of the Civil Rights Act of 1964, Code section 105(h) and PHS Act section 2716 (prohibiting discrimination in favor of highly compensated individuals), the Genetic Information Nondiscrimination Act of 2008, the Family and Medical Leave Act, ERISA's fiduciary provisions, and State law.").

[18] *See* 42 U.S.C. 12112(a) and 29 CFR 1630.4(a)(1)(vi). Title I of the ADA applies to individuals and covered entities other than employees and employers, including employment agencies, labor organizations, and joint-labor management committees. See 42 U.S.C. 12111(2), 12111(4), 12111(5), and 12112(b) (describing the prohibited practices of each of these entities); *see also* 29 CFR 1630.2(b) (definition of covered entity) and 29 CFR 1630.4(a)(1) (description of prohibited practices). Although employers generally will be the ADA covered entities that offer wellness programs, this preamble, the proposed rule, and the interpretive guidance accompanying the proposed rule frequently use the term "covered entity," as that term appears throughout EEOC's entire ADA

Continued

The ADA also requires employers to provide reasonable accommodations (modifications or adjustments) to enable individuals with disabilities to have equal access to the fringe benefits offered to individuals without disabilities.[19] Additionally, the ADA restricts employers from obtaining medical information from employees by generally prohibiting them from making disability-related inquiries or requiring medical examinations.[20] The statute, however, provides an exception to this rule by stating that ''[a] covered entity may conduct voluntary medical examinations, including voluntary medical histories, which are part of an employee health program available to employees at that work site.'' [21] Employee health programs include workplace wellness programs. In previous guidance on disability-related inquiries and medical examinations under the ADA, EEOC stated that: ''A wellness program is 'voluntary' as long as an employer neither requires participation nor penalizes employees who do not participate.'' [22] However, neither the statute nor EEOC's regulations address the extent to which incentives might affect the voluntary nature of a wellness program.

The Interaction of Title I of the ADA and HIPAA's Nondiscrimination Provisions, as Amended by the Affordable Care Act

The Commission's interpretation of the term ''voluntary'' in the ADA's disability-related inquiries and medical examinations provision is central to the interaction between the ADA and HIPAA's wellness program provisions, as amended by the Affordable Care Act. A plausible reading of ''voluntary'' in isolation is that covered entities can only offer de minimis rewards or penalties to employees for their participation (or nonparticipation) in wellness programs that include disability-related inquiries and medical examinations. That reading, however, would make many wellness program incentives tied to the disclosure of health information or the completion of medical examinations expressly permitted by HIPAA impermissible under the ADA. Although it is clear that compliance with the standards in HIPAA is not determinative of compliance with the ADA,[23] the Commission believes that it has a responsibility to interpret the ADA in a manner that reflects both the ADA's goal of limiting employer access to medical information and HIPAA's and the Affordable Care Act's provisions promoting wellness programs.

Accordingly, the Commission concludes that allowing certain incentives related to wellness programs, while limiting them to prevent economic coercion that could render provision of medical information involuntary, is the best way to effectuate the purposes of the wellness program provisions of both laws.[24] One purpose of the ADA's provision applicable to employee health programs is to allow such programs access to medical information where employees voluntarily provide that information.[25] One purpose of HIPAA's nondiscrimination provisions governing wellness programs is to ensure that wellness programs do not offer incentives so large as to have the effect of denying coverage or creating too heavy a financial penalty for individuals who do not meet certain health standards.[26] HIPAA's nondiscrimination provisions governing wellness programs, however, do not include provisions like those in the ADA that limit the kinds of medical information employers may ask employees to provide through disability-related inquiries or medical examinations.

The proposed rule explains what an employee health program is, what it means for an employee health program to be voluntary, what incentives employers may offer as part of a voluntary employee health program, and what requirements apply concerning notice and confidentiality of medical information obtained as part of voluntary employee health programs. In addition, the proposed rule explains that compliance with rules concerning voluntary employee health programs does not ensure compliance with all the antidiscrimination laws EEOC enforces.

The proposed rule clarifies that an employer may offer limited incentives up to a maximum of 30 percent of the total cost of employee-only coverage, whether in the form of a reward or penalty, to promote an employee's participation in a wellness program that includes disability-related inquiries or medical examinations as long as participation is voluntary. As noted below, EEOC seeks comment on whether additional protections for low-income employees are needed. Voluntary means that a covered entity: (1) Does not require employees to participate; (2) does not deny coverage under any of its group health plans or particular benefits packages within a group health plan for non-participation or limit the extent of such coverage (except pursuant to allowed incentives); and (3) does not take any adverse employment action or retaliate against, interfere with, coerce, intimidate, or threaten employees within the meaning of Section 503 of the ADA, at 42 U.S.C. 12203.

Further, to ensure that participation in a wellness program that includes disability-related inquiries and/or medical examinations, and that is part of a group health plan, is truly voluntary, an employer must provide a notice that clearly explains what medical information will be obtained, who will receive the medical information, how the medical

regulation. The term ''covered entity'' also has a different meaning for purposes of the HIPAA Privacy, Security, and Breach Notification Rules, as explained later in this preamble. The proposed rule uses the term ''HIPAA covered entity'' when discussing HIPAA privacy requirements that apply to the group health plan.

[19] 42 U.S.C. 12112(b)(5)(A) and 29 CFR 1630.9 (prohibiting covered entity from failing to provide reasonable accommodations absent undue hardship); 29 CFR 1630.2(o)(1)(iii) (reasonable accommodation includes modifications and adjustments that enable a covered entity's employees to enjoy ''equal benefits and privileges of employment.'')

[20] 42 U.S.C. 12112(d)(4)(A) (a covered entity ''shall not require a medical examination and shall not make inquiries of an employee as to whether such employee is an individual with a disability or as to the nature or severity of the disability, unless such examination or inquiry is shown to be job-related and consistent with business necessity.''). EEOC refers to the types of inquiries prohibited by the ADA as ''disability-related inquiries'' and has issued guidance on what constitutes such an inquiry. *See* Enforcement Guidance on Disability-Related Inquiries and Medical Examinations of Employees Under the Americans with Disabilities Act, Q&A 1 (July 27, 2000), available at *http://www.eeoc.gov/policy/docs/guidance-inquiries.html* (hereafter ''Guidance'').

[21] 42 U.S.C. 12112(d)(4)(B).

[22] *See* Guidance, at Q&A 22.

[23] *See* 78 FR at 33168 (noting that HIPAA compliance is not determinative of ADA compliance); *see also* PHS Act section 2705(j)(3)(A) (noting that wellness programs complying with the HIPAA requirements ''shall not violate this section'' of the Act).

[24] The Commission does not believe that the ADA's ''safe harbor'' provision applicable to insurance, as interpreted by the court in *Seff* v. *Broward County,* 778 F. Supp. 2d 1370 (S.D. Fla. 2011), affirmed, 691 F.3d 1221 (11th Cir. 2012), is the proper basis for finding wellness program incentives permissible. The ADA contains a clear ''safe harbor'' for wellness programs—the ''voluntary'' provision at 42 U.S.C. 12112(d)(4)(B). *See* H.R. Rep. 101–485, pt. 2, at 51 (''A growing number of employers today are offering voluntary wellness programs in the workplace. These programs often include medical screening for high blood pressure, weight control, cancer detection, and the like. As long as the programs are voluntary and the medical records are maintained in a confidential manner and not used for the purpose of limiting health insurance eligibility or of preventing occupational advancement, these activities would fall within the purview of accepted activities.''). Reading the insurance safe harbor as exempting these programs from coverage would render the ''voluntary'' provision superfluous.

[25] *See id.* at H.R. Rep. 101–485, pt. 2, at 51.

[26] 71 FR 75014, 75018 (December 13, 2006).

information will be used, the restrictions on its disclosure, and the methods the covered entity will employ to prevent improper disclosure of the medical information. Finally, the proposed rule allows the disclosure of medical information obtained by wellness programs to employers only in aggregate form, except as needed to administer the health plan. The proposed rule does not implicate disability-related inquiries or medical examinations outside the context of a voluntary wellness program.

Summary of Proposed Revisions

The proposed rule re-asserts the Commission's position, based on the language of the ADA, that employee health programs that include disability-related inquiries or medical examinations (including inquiries or medical examinations that are part of a HRA or medical history) must be voluntary and clarifies the application of that rule in light of the amendments made to HIPAA by the Affordable Care Act.

Proposed section 1630.14(d)(1) says that an employee health program, including any disability-related inquiries and medical examinations that are part of such a program, must be reasonably designed to promote health or prevent disease. This standard is similar to the standard under the tri-agency regulations applicable to health-contingent wellness programs.[27] In order to meet the standard, the program must have a reasonable chance of improving the health of, or preventing disease in, participating employees, and must not be overly burdensome, a subterfuge for violating the ADA or other laws prohibiting employment discrimination, or highly suspect in the method chosen to promote health or prevent disease. The interpretive guidance offers examples of programs that would and would not meet this standard.

Section 1630.14(d)(2)(i)–(iii) explains that, for a program to be considered voluntary, a covered entity may not require an employee to participate in such a program and may not deny coverage under any of its group health plans or particular benefits packages within a group health plan, generally may not limit the extent of such coverage, and may not take any other adverse action against employees who refuse to participate in an employee health program or fail to achieve certain health outcomes. Additionally, an employer may not retaliate against, interfere with, coerce, intimidate, or threaten employees in violation of Section 503 of the ADA, at 42 U.S.C. 12203 (*e.g.,* by coercing an employee to participate in an employee health program or threatening to discipline an employee who does not participate).

Section 1630.14(d)(2)(iv) says that for an employee's participation in a wellness program that is part of a group health plan to be deemed voluntary, a covered entity must provide a notice clearly explaining what medical information will be obtained, how the medical information will be used, who will receive the medical information, the restrictions on its disclosure, and the methods the covered entity uses to prevent improper disclosure of medical information.

Section 1630.14(d)(3) clarifies that the offer of limited incentives to participate in wellness programs that are part of a group health plan and that include disability-related inquiries and/or medical examinations, will not render the program involuntary. However, the total allowable incentive available under all programs (both participatory programs and health-contingent programs) may not exceed 30 percent of the total cost of employee-only coverage, which generally is the maximum allowable incentive available under HIPAA and the Affordable Care Act for health-contingent wellness programs.[28]

The EEOC proposes to extend the 30 percent limit set under HIPAA and the Affordable Care Act to include participatory wellness programs that ask an employee to respond to a disability-related inquiry or undergo a medical examination. HIPAA and Affordable Care Act wellness program provisions are limited to regulating what constitutes discrimination based on a health factor. As long as an incentive for a participatory wellness program is available to all similarly situated employees, regardless of any health factor, the incentive will not violate HIPAA and the Affordable Care Act. By contrast, the ADA rules concerning disability-related inquiries and medical examinations of employees limit the circumstances under which employers may obtain medical information from employees and the type of information that may be sought. For this reason, EEOC has determined that placing limits on the rewards employers may offer for employee participation (or penalties for non-participation) where participation requires employees to answer disability-related inquiries or take medical examinations promotes the ADA's interest in ensuring that incentive limits are not so high as to make participation in the program involuntary. At the same time, these limits comport with HIPAA and the Affordable Care Act wellness program provisions.

The EEOC has not changed any of the exceptions to confidentiality set out in section 1630.14(d). The Commission, however, proposes to add a new subsection, 1630.14(d)(6), concerning the confidentiality and use of medical information gathered in the course of providing voluntary health services to employees, including information collected as part of an employee's participation in an employee health program. This subsection states that medical information collected through an employee health program only may be provided to a covered entity under the ADA in aggregate terms that do not disclose, or are not reasonably likely to disclose, the identity of specific individuals, except as needed to administer the health plan and except as permitted under 1630.14(d)(4). The interpretive guidance explains that both employers that sponsor wellness programs and administrators of wellness programs acting as agents of employers have obligations to ensure compliance with this provision.

Further, the interpretive guidance explains that where a wellness program is part of a group health plan, the individually identifiable health information collected from or created about participants as part of the wellness program is protected health information under the HIPAA Privacy, Security, and Breach Notification Rules. *See* 45 CFR part 160 and Part 164. The HIPAA Privacy, Security, and Breach Notification Rules apply to HIPAA covered entities, which include group health plans, and generally protect the individually identifiable health information maintained by or on behalf of such entities. Accordingly, the interpretative guidance provides that where a wellness program is part of a group health plan and required to comply with HIPAA, its obligation to comply with section 1630.14(d)(6) generally may be satisfied by adhering to the HIPAA Privacy Rule. Thus, when an employer that is a health plan sponsor performing plan administration receives individually identifiable health information from or on behalf of the group health plan, as permitted by HIPAA, it generally satisfies its requirement to comply with section 1630.14(d)(6) by certifying to the group

[27] *See* 26 CFR 54.9802–1(f)(3)(iii); 29 CFR 2590.702(f)(3)(iii); 45 CFR 146.121(f)(iii).

[28] The interpretive guidance accompanying the proposed rule as well as question 6 below address the application of incentives related to smoking cessation programs.

health plan, as provided by 45 CFR 164.504(f)(2)(ii), that it will not use or disclose the information for purposes not permitted by its group health plan documents and the HIPAA Privacy Rule and abiding by that certification. If an employer is not performing plan administration on behalf of the group health plan, then the aggregate information that the employer may receive from the wellness program under section 1630.14(d)(6) must be de-identified in accordance with the HIPAA Privacy Rule. Further, other disclosures of protected health information from the wellness program may only be made in accordance with the Privacy Rule. Thus, certain disclosures that are otherwise permitted under 1630.14(d)(4) for employee health programs generally may not be permissible under the Privacy Rule for wellness programs that are part of a group health plan without the written authorization of the individual.

Section 1630.14(d)(7) clarifies that compliance with paragraph (d) of this section, including the proposed limit on incentives under the ADA, does not relieve a covered entity of its obligation to comply with other employment nondiscrimination laws. Thus, for example, as the interpretive guidance accompanying the proposed rule explains, even if an employer's wellness program complies with the incentive limits set forth in the ADA regulations, the employer would violate Title VII or the Age Discrimination in Employment Act (ADEA) if that program discriminates on the basis of race, sex, national origin, or age, or any other grounds prohibited by those statutes.

Employee health programs that do not include disability-related inquiries or medical examinations, such as those that provide employees with general health information and education programs are not subject to the incentive rules discussed here. Like other benefit programs offered by covered entities, however, these programs must not discriminate against employees with disabilities. This nondiscrimination requirement includes providing reasonable accommodations that enable employees with disabilities to fully participate in employee health programs and earn any reward or avoid any penalty offered as part of those programs.[29]

This revision will require renumbering 29 CFR 1630.14(d).

The Commission invites written comments from members of the public on any issues related to this proposed rule, including general comments about wellness programs or about particular practices that might violate the ADA or other laws enforced by the EEOC. In addition, the Commission specifically requests comments on several issues:

(1) Whether the way in which the Commission reconciles the ADA's ''voluntary'' requirement with the wellness program provisions in the Affordable Care Act is appropriate given the intent behind both provisions. Specifically, the Commission seeks comment on:

(a) Whether to be ''voluntary'' under the ADA, entities that offer incentives to encourage employees to disclose medical information must also offer similar incentives to persons who choose not to disclose such information, but who instead provide certification from a medical professional stating that the employee is under the care of a physician and that any medical risks identified by that physician are under active treatment.

(b) Whether to be considered ''voluntary'' under the ADA, the incentives provided in a wellness program that asks employees to respond to disability-related inquiries and/or undergo medical examinations may not be so large as to render health insurance coverage unaffordable under the Affordable Care Act and therefore in effect coercive for an employee. Specifically, the Commission seeks input on whether it would be appropriate for the Commission to provide that the incentives employers offer to employees to promote participation in wellness programs must not render the cost of health insurance unaffordable to employees within the meaning of 26 U.S.C. 36B (c)(2)(C) as implemented by 26 CFR 54.4980H–5(e). Generally, the cost of health insurance is affordable within the meaning of 26 U.S.C. 36B(c)(2)(C) if the portion an employee would have to pay for employee-only coverage would not exceed a specified percent of household income (9.56 percent in 2015). Where such incentives would render a plan unaffordable for an individual, it would be deemed coercive and involuntary to require that individual to answer disability-related inquiries and/or submit to medical examinations connected with the wellness program at issue.

(c) Whether there are any methods other than those mentioned in the proposed regulation and the questions above by which the Commission can effectuate the intent of both the ''voluntary'' requirement in the ADA and the provisions in the Affordable Care Act intended to encourage workplace health promotion and disease prevention.

(2) Should the proposed notice requirements of this rule, at section 1630.14(d)(2)(iv), also include a requirement that employees participating in wellness programs that include disability-related inquiries and/or medical examinations, and that are part of a group health plan, provide prior, written, and knowing confirmation that their participation is voluntary? If so, what form should such an authorization take? Are principles of informed consent in the medical context helpful in fashioning an appropriate authorization? Are there existing forms that could provide adequate protections, such as forms developed under HIPAA, forms employers already use in connection with wellness programs, or forms employers use to comply with Title II of GINA? What costs would be associated with developing an appropriate authorization form and/or collecting and maintaining authorization forms for employees who decide to participate in wellness programs?

(3) Should the proposed notice requirement apply only to wellness programs that offer more than de minimis rewards or penalties to employees who participate (or decline to participate) in wellness programs that ask them to respond to disability-related inquiries and/or undergo medical examinations? If so, how should the Commission define ''de minimis''?

(4) Which best practices ensure that wellness programs are designed to promote health and do not operate to shift costs to employees with health impairments or stigmatized conditions?

(5) Whether employers offer (or are likely to offer in the future) wellness programs outside of a group health plan or group health insurance coverage that use incentives to promote participation in such programs or to encourage employees to achieve certain health outcomes and the extent to which the ADA regulations should limit incentives provided as part of such programs.

(6) What will be the practical effect of adopting the specific incentive limit set

[29] Additionally, as discussed earlier in this preamble, the regulations under HIPAA and the Affordable Care Act require that an activity-only program allow a reasonable alternative standard (or waiver of the otherwise applicable standard) for obtaining the reward for any individual for whom, for that period, it is unreasonably difficult due to a medical condition to satisfy the otherwise applicable standard, or for whom it is medically inadvisable to attempt to satisfy the otherwise applicable standard. Similarly, an outcome-based program must allow a reasonable alternative standard (or waiver of the otherwise applicable standard) for obtaining the reward to any individual who does not meet the initial standard based on a measurement, test, or screening.

forth in the proposed rule (rather than expressly referencing and incorporating the wellness-program incentive limits as they are defined by the Secretaries of Labor, Treasury, and Health and Human Services pursuant to the Affordable Care Act)? Specifically, what, if any, will be the impact of the proposed rule's 30-percent limit on incentives offered with respect to wellness programs intended to prevent or reduce tobacco use where such programs ask employees to respond to disability-related inquiries and/or undergo medical examinations?

Regulatory Procedures

Executive Order 12866

Pursuant to Executive Order 12866, EEOC has coordinated this proposed rule with the Office of Management and Budget. Under section 3(f)(1) of Executive Order 12866, EEOC has determined that the proposed regulation will not have an annual effect on the economy of $100 million or more, or adversely affect in a material way the economy, a sector of the economy, productivity, competition, jobs, the environment, public health or safety, or state, local or tribal governments or communities.

Although a detailed cost-benefit analysis of the proposed regulation is not required, the Commission recognizes that providing some information on potential costs and benefits of the rule may be helpful in assisting members of the public in better understanding the potential impact of the proposed rule. The Commission notes that the rule will significantly aid compliance with the ADA and with HIPAA, as amended by the Affordable Care Act, by employers and group health plans that offer wellness programs. Currently, employers face uncertainty as to whether providing incentives permitted by HIPAA will subject them to liability under the ADA. This rule will clarify that the ADA does permit employers to offer incentives to promote participation in wellness programs that include disability-related inquiries and/or medical examinations. We believe that a potential benefit of this rule is that it will enable employers to adopt wellness programs that include incentives with certainty about their obligations under the ADA. The Commission does not believe the costs associated with the rule are significant. Employers covered by the ADA are already required to comply with wellness program incentive limits for health-contingent wellness programs. EEOC's proposed rule differs from HIPAA's wellness program incentives only in that it extends the 30 percent limit on incentives under health-contingent wellness programs to participatory wellness programs. HIPAA, as amended by the Affordable Care Act, places no limits on incentives for participatory wellness programs. As the incentives offered by the vast majority of employers currently fall below the limit of 30 percent of the cost of self-only coverage, the Commission does not believe the rule will negatively affect the ability of employers to offer incentives sufficient to promote meaningful participation in wellness programs.

The only other potential cost is associated with the requirement that employers provide a notice to employees informing them what medical information will be obtained, how it will be used, who will receive it, and the restrictions on disclosure. For the reasons set forth in the Paperwork Reduction Act analysis that follows, the Commission concludes that approximately 299,115 employers will need to develop such a notice. The Commission estimates the time required to develop the notice to be four hours, for a total of 1,196,460 hours. According to data from the Bureau of Labor Statistics, the average hourly compensation for employees in ''management, professional, and related'' occupations was $55.56 as of December 2014, and the average hourly compensation for employees working in ''office and administrative support'' was $23.98. See Bureau of Labor Statistics, Employer Costs for Employee Compensation—December 2014 (March 11, 2015), available at *www.bls.gov/news.release/pdf/ecec.pdf*. Assuming that 50 percent of the time required to develop an appropriate notice is attributable to employees working in management, professional, and related occupations and that 50 percent of the time is attributable to employees working in office and administrative support, the Commission estimates that the total cost of developing a notice that complies with the requirements of the proposed rule would be $42,583,000. We note that some employers and group health plans may already have notices that comply with these requirements, and that those that do not will incur only a one-time cost to develop an appropriate notice. The Commission seeks comments on these cost estimates.

Other requirements in the rule will result in no costs, since they simply restate basic principles of nondiscrimination under the ADA. Even in the absence of this rule, employers are prohibited from requiring employees to participate in employee health programs that include disability-related inquiries and/or medical examinations; denying employees health insurance (or any other benefit of employment) if they do not participate in wellness programs; retaliating against employees who file charges claiming that a wellness program violates the ADA; and attempting to induce participation in employee health programs through interference with their ADA rights, coercion, intimidation, and threats. Employers are also required to provide reasonable accommodations to enable employees to enjoy equal benefits and privileges of employment, which would include participation in employee health programs. To the extent confidentiality of medical information acquired in the course of providing an employee health program is required, the proposed rule will result in no additional costs. The ADA already requires employers to keep medical information about applicants and employees confidential.

To the extent the proposed rule can be read to impose additional confidentiality obligations, the interpretive guidance to the rule makes clear that a wellness program that is part of a group health plan may generally satisfy its obligation to comply with proposed section 1630.14(d)(6) by adhering to the HIPAA Privacy Rule. *See* 45 CFR part 160 and Part 164, Subparts A and E. An employer that is a health plan sponsor and receives individually identifiable health information from or on behalf of the group health plan, as permitted by HIPAA when the plan sponsor is administering aspects of the plan, may generally comply with the proposed rule by certifying to the group health plan, also pursuant to the HIPAA Privacy Rule, that it will not use or disclose the information for purposes not permitted by its plan documents and the Privacy Rule, such as for employment purposes, and abiding by that certification. Further, if an employer is not performing plan administration functions on behalf of the group health plan, then the employer may receive aggregate information from the wellness program under section 1630.14(d)(6) only so long as it is de-identified in accordance with the HIPAA Privacy Rule.

Paperwork Reduction Act

These proposed additions to EEOC's regulations contain an information collection requirement subject to review and approval by the Office of Management and Budget (OMB) under the Paperwork Reduction Act. As required by the Paperwork Reduction Act, the EEOC is submitting to OMB a

request for approval of the information collection requirement under section 3507(d) of the Act. Organizations or individuals desiring to submit comments for consideration by OMB on the information collection requirement should address them to Chad Lallemand in the Office of Information and Regulatory Affairs, Office of Management and Budget, 725 17th Street NW., Room 10235, New Executive Office Building, Washington, DC 20503, or by email to *OIRA_submission@omb.eop.gov*.

Copies of comments should also be sent to Bernadette Wilson, Acting Executive Officer, Executive Secretariat, Equal Employment Opportunity Commission, 131 M Street NE., Washington, DC 20507. As a convenience to commenters, the Executive Secretariat will accept comments totaling six or fewer pages via FAX transmittal. This limitation is necessary to assure access to the equipment. The telephone number of the fax receiver is (202) 663–4114. (This is not a toll-free number.) Receipt of FAX transmittals will not be acknowledged, except that the sender may request confirmation of receipt by calling the Executive Secretariat staff at (202) 663–4070 (voice) or (202) 663–4074 (TTY). (These are not toll-free numbers.) Instead of sending written comments to EEOC, you may submit comments and attachments electronically at *http://www.regulations.gov*, which is the Federal eRulemaking Portal. Follow the instructions online for submitting comments. All comments received through this portal will be posted without change, including any personal information you provide. Copies of comments submitted by the public to EEOC directly or through the Federal eRulemaking Portal will be available for review at the Commission's library between the hours of 9:00 a.m. and 5:00 p.m. Eastern Time or can be reviewed at *http://www.regulations.gov*.

Overview of This Information Collection

Collection Title: Notice requirement under Title I of the ADA, 29 CFR 1630.14(d)(2)(iv).

OMB number: 3046–xxxx.

Description of affected public: Employers with 15 or more employees that are subject to Title I of the ADA and offer wellness programs as part of group health plans.

Number of respondents: 299,115.

Initial one-time hour burden: 1,196,460.

Annual hour burden: None.

Number of forms: None.

Federal cost: None.

Abstract: The proposed rule says that a wellness program that includes disability-related inquiries or medical examinations and that is part of a group health plan must meet several requirements to be deemed voluntary, including providing a notice to employees informing them what medical information will be obtained, how it will be used, who will receive it, and the restrictions on disclosure.

Burden Statement: We estimate that there are approximately 782,000 employers with 15 or more employees subject to the ADA and, of that number, one half to two thirds (391,000 to 586,500) offer some type of wellness program.[30] Of those employers, 32 percent to 51 percent require employees to complete a health risk assessment (HRA) that likely contains disability-related questions.[31] Using the highest estimates, we assume that 299,115 (51 percent of 586,500 employers) will be covered by this requirement.

Some employers and group health plans may already use forms that comply with the proposed notice requirement; therefore, the burden only will be on employers and group health plans that will incur a one-time burden to develop an appropriate notice to ensure that employees who provide medical information pursuant to a wellness program do so voluntarily. This notice may be included on or attached to any HRA employees are asked to complete and should explain what medical information will be obtained, how it will be used, who will receive it, and the restrictions on disclosure. Assuming that creation of such a document would take four hours, and assuming that 299,115 employers would be covered by the proposed regulation, this one-time burden would be 1,196,460 hours. Because employers do not have to develop a new form unless they collect medical information for a different purpose, they will be able to annually redistribute the same notice to all relevant employees.

For those wishing to comment on the above information collection, OMB is particularly interested in comments which:

(1) Evaluate whether the proposed collection of information is necessary for the proper performance of the Commission's functions, including whether the information will have practical utility;

(2) Evaluate the accuracy of the Commission's estimate of the burden of the proposed collection of information, including the validity of the methodology and assumptions used;

(3) Enhance the quality, utility, and clarity of the information to be collected; and

(4) Minimize the burden of the collection of information on those who are to respond, including the use of appropriate automated, electronic, mechanical, or other technological collection techniques or other forms of information technology, *e.g.*, permitting electronic submission of responses.

Regulatory Flexibility Act

Title I of the ADA applies to approximately 782,000 employers with 15 or more employees subject to the ADA, approximately 764,233 of which are small firms (entities with 15–500 employees) according to data provided by the Small Business Administration Office of Advocacy. *See Firm Size Data* at *http://www.sba.gov/advocacy/849/12162*.

The Commission certifies under 5 U.S.C. 605(b) that this proposed rule will not have a significant economic impact on a substantial number of small entities because it imposes no reporting burdens and only minimal costs on such firms. The proposed rule clarifies that, in most respects, employers who offer wellness programs that are part of their health plans may offer incentives to employees consistent with HIPAA and the Affordable Care Act without violating the ADA. The amount of an incentive offered for participation (alone or in combination with incentives offered for health-contingent wellness programs) in a wellness program will not render a program involuntary under the ADA as long as the incentive does not exceed 30 percent of the total cost of employee-only coverage.

To the extent that employers will expend resources to train human resources staff and others on the revised rule, we note that the EEOC conducts extensive outreach and technical assistance programs, many of them at no cost to employers, to assist in the training of relevant personnel on EEO-related issues. For example, in FY 2013, the agency's outreach programs reached more than 280,000 persons through participation in more than 3,800 no-cost educational, training, and outreach events. We estimate that the typical human resources professional will need to dedicate, at most, 90 minutes to gain a satisfactory understanding of the

[30] According to the RAND Final Report, ''approximately half of U.S. employers offer wellness promotion initiatives.'' By contrast, the Kaiser Survey found that ''[s]eventy-four percent of employers offering health benefits'' offer at least one wellness program.

[31] The Kaiser Survey reports that 51 percent of large employers versus 32 percent of small employers ask employees to complete a HRA.

revised regulations. We further estimate that the median hourly pay rate of a human resources professional is approximately $48.50. *See* Bureau of Labor Statistics, Occupational Employment and Wages, May 2013 at *http://www.bls.gov/oes/current/oes113121.htm.* Assuming that small entities have between one and five human resources professionals/managers, we estimate that the cost per entity of providing appropriate training will be between approximately $72.75 and $363.75.

EEOC does not believe that this cost will be significant for the impacted small entities. We urge small entities to submit comments concerning EEOC's estimates of the number of small entities affected, as well as the cost to those entities.

Unfunded Mandates Reform Act of 1995

This proposed rule will not result in the expenditure by state, local, or tribal governments, in the aggregate, or by the private sector, of $100 million or more in any one year, and it will not significantly or uniquely affect small governments. Therefore, no actions were deemed necessary under the provisions of the Unfunded Mandates Reform Act of 1995.

List of Subjects in 29 CFR Part 1630

Equal employment opportunity, Individuals with disabilities.

For the Commission,

Dated: April 13, 2015.

Bernadette B. Wilson,

Acting Executive Officer.

For the reasons set forth in the preamble, the EEOC proposes to amend 29 CFR part 1630 to read as follows:

PART 1630—[AMENDED]

■ 1. The authority citation for part 1630 continues to read as follows:

Authority: 42 U.S.C. 12116 and 12205a of the American with Disabilities Act, as amended.

■ 2. Amend § 1630.14 by:

■ a. Redesignating paragraph (d)(1) as paragraph (d)(4);

■ b. Redesignating paragraph (d)(2) as paragraph (d)(5);

■ c. Adding new paragraphs (d)(1), (d)(2), (d)(3), (d)(6), and (d)(7).

The revisions and additions read as follows:

§ 1630.14 Medical examinations and inquiries specifically permitted.

* * * * *

(d) * * *

(1) *Employee health program.* An employee health program, including any disability-related inquiries or medical examinations that are part of such program, must be reasonably designed to promote health or prevent disease. A program satisfies this standard if it has a reasonable chance of improving the health of, or preventing disease in, participating employees, and it is not overly burdensome, is not a subterfuge for violating the ADA or other laws prohibiting employment discrimination, and is not highly suspect in the method chosen to promote health or prevent disease.

(2) *Voluntary.* An employee health program that includes disability-related inquiries or medical examinations (including disability-related inquiries or medical examinations that are part of a health risk assessment) is voluntary as long as a covered entity:

(i) Does not require employees to participate;

(ii) Does not deny coverage under any of its group health plans or particular benefits packages within a group health plan for non-participation, or limit the extent of benefits (except as allowed under paragraph (d)(3) of this section) for employees who do not participate;

(iii) Does not take any adverse employment action or retaliate against, interfere with, coerce, intimidate, or threaten employees within the meaning of Section 503 of the ADA, at 42 U.S.C. 12203; and

(iv) Where a health program is a wellness program that is part of a group health plan, provides employees with a notice that:

(A) Is written so that the employee from whom medical information is being obtained is reasonably likely to understand it;

(B) Describes the type of medical information that will be obtained and the specific purposes for which the medical information will be used; and

(C) Describes the restrictions on the disclosure of the employee's medical information, the employer representatives or other parties with whom the information will be shared, and the methods that the covered entity will use to ensure that medical information is not improperly disclosed (including whether it complies with the measures set forth in the HIPAA regulations codified at 45 CFR parts 160 and 164).

(3) *Incentives offered for employee wellness programs that are part of a group health plan.* The use of incentives (financial or in-kind) in an employee wellness program, whether in the form of a reward or penalty, together with the reward for any other wellness program that is offered as part of a group health plan (as defined in 29 U.S.C. 1191b(a)), will not render the program involuntary if the maximum allowable incentive available under the program (whether the program is a participatory program or a health-contingent program, or some combination of the two, as those terms are defined in regulations at 26 CFR 54.9802–1(f)(1)(ii) and (iii), 29 CFR 2590.702(f)(1)(ii) and (iii), and 45 CFR 146.121(f)(1)(ii) and (iii), respectively) does not exceed 30 percent of the total cost of employee-only coverage.

* * * * *

(6) Except as permitted under paragraph (d)(4) and as is necessary to administer the health plan, information obtained under paragraph (d) of this section regarding the medical information or history of any individual may only be provided to an ADA covered entity in aggregate terms that do not disclose, or are not reasonably likely to disclose, the identity of any employee.

(7) Compliance with the requirements of paragraph (d) of this section, including the limit on incentives under the ADA, does not relieve a covered entity from the obligation to comply in all respects with the nondiscrimination provisions of Title VII of the Civil Rights Act of 1964, 42 U.S.C. 2000e *et seq.*, the Equal Pay Act of 1963, 29 U.S.C. 206(d), the Age Discrimination in Employment Act of 1967, 29 U.S.C. 621 *et seq.*, Title II of the Genetic Information Nondiscrimination Act of 2008, 42 U.S.C. 2000ff, *et seq.*, or other sections of Title I of the ADA.

■ 3. In the Appendix to Part 1630 revise Section 1630.14(d), to read as follows:

Appendix to Part 1630—Interpretive Guidance on Title I of the Americans With Disabilities Act

* * * * *

Section 1630.14 Medical Examinations and Inquiries Specifically Permitted

Section 1630.14(d)(1): Health Program

Part 1630 permits voluntary medical examinations and inquiries, including voluntary medical histories, as part of employee health programs. These health programs include wellness programs, which often incorporate, for example: A health risk assessment (HRA) (consisting of a medical questionnaire, with or without medical examinations, to determine risk factors); medical screening for high blood pressure, cholesterol, or glucose; classes to help employees stop smoking or lose weight; physical activities in which employees can engage (such as walking or exercising daily); coaching to help employees meet health goals; and/or the administration of prescription drugs (like insulin). Many employers offer wellness programs as part of a group health plan as a means of improving overall employee health with the goal of realizing lower health care costs.

It is not sufficient for a covered entity merely to claim that its collection of medical information is part of a wellness program; the program, including any disability-related inquiries and medical examinations that are part of such program, must be reasonably designed to promote health or prevent disease. In order to meet this standard, the program must have a reasonable chance of improving the health of, or preventing disease in, participating employees, and must not be overly burdensome, a subterfuge for violating the ADA or other laws prohibiting employment discrimination, or highly suspect in the method chosen to promote health or prevent disease. Conducting a HRA and/or a biometric screening of employees for the purpose of alerting them to health risks of which they may have been unaware would meet this standard, as would the use of aggregate information from employee HRAs by an employer to design and offer health programs aimed at specific conditions that are prevalent in the workplace. An employer might conclude from aggregate information, for example, that a significant number of its employees have diabetes or high blood pressure and might design specific programs that would enable employees to treat or manage these conditions. On the other hand, collecting medical information on a health questionnaire without providing employees follow-up information or advice, such as providing feedback about risk factors or using aggregate information to design programs or treat any specific conditions, would not be reasonably designed to promote health. Additionally, a program is not reasonably designed to promote health or prevent disease if it imposes, as a condition to obtaining a reward, an overly burdensome amount of time for participation, requires unreasonably intrusive procedures, or places significant costs related to medical examinations on employees. A program also is not reasonably designed if it exists mainly to shift costs from the covered entity to targeted employees based on their health.

Section 1630.14(d)(2): Definition of ''Voluntary''

Section 1630.14(d)(2)(i)–(iii) of this part says that participation in employee health programs that include disability-related inquiries or medical examinations (such as disability-related inquiries or medical examinations that are part of a HRA) must be voluntary in order to comply with the ADA. This means that covered entities may not require employees to participate in such programs, may not deny employees access to health coverage under any of its group health plans or particular benefits packages within a group health plan for non-participation, may not limit coverage under their health plans for such employees, except to the extent the limitation (*e.g.*, having to pay a higher deductible) may be the result of forgoing a financial incentive permissible under paragraph (d)(3), and may not take any other adverse action against employees who choose not to answer disability-related inquiries or submit to medical examinations. Additionally, covered entities may not retaliate against, interfere with, coerce, intimidate, or threaten employees within the meaning of Section 503 of the ADA, at 42 U.S.C. 12203. For example, an employer may not retaliate against an employee who refused to participate in a health program or filed a charge with the EEOC concerning the program, may not coerce an employee into participating in a health program or into giving the employer access to medical information collected as part of the program, and may not threaten an employee with discipline if the employee does not participate in a health program. *See* 42 U.S.C. 12203(a) and (b); 29 CFR 1630.12.

Section 1630.14(d)(2)(iv) of this part also states that for a wellness program that is part of a group health plan to be voluntary, an employer must provide employees with a notice clearly explaining what medical information will be obtained, how the medical information will be used, who will receive the medical information, the restrictions on its disclosure, and the methods the covered entity uses to prevent improper disclosure of medical information.

Section 1630.14(d)(3): Limitations on Incentives

The ADA, interpreted in light of the Health Insurance Portability and Accountability Act (HIPAA), as amended by the Affordable Care Act, does not prohibit the use of incentives to encourage participation in employee health programs, but it does place limits on them. In general, the use of limited incentives (which include both financial and in-kind incentives, such as time-off awards, prizes, or other items of value) in a wellness program that is part of a group health plan or group health insurance coverage will not render a wellness program involuntary. However, the maximum allowable incentive for a participatory program that involves asking disability-related questions or conducting medical examinations (such as having employees complete a HRA) or for a health-contingent program that requires participants to satisfy a standard related to a health factor may not exceed 30 percent of the total cost of employee-only coverage. Thus, for example, for purposes of compliance with these provisions under the ADA, suppose a group health plan under which an employee is enrolled has a total annual premium for employee-only coverage of $5,000 (which includes both the employer's and employee's contributions toward coverage). The plan provides a $250 reward to employees who complete a HRA (this reward is given to any participant who completes the HRA, without regard to the health issues identified as part of the assessment). The plan also offers a health-contingent wellness program to promote cardiovascular health, with an opportunity to earn a $1,500 reward. An employee who satisfies both components of the program could earn a total reward of $1,750. Such a reward would violate the ADA because the total reward available exceeds 30 percent of the total cost of coverage. However, if the employer offered no reward for completing the HRA and a $1,500 reward for achieving health outcomes under the wellness program (or offered $750 for completing the HRA and $750 for achieving health outcomes in the wellness program), the incentives would comply with the ADA. Not all wellness programs require disability-related inquiries or medical examinations in order to earn an incentive. Examples may include attending nutrition, weight loss, or smoking cessation classes. These types of programs are not subject to the ADA incentive rules discussed here, although programs that qualify as health-contingent programs are subject to HIPAA incentive limits.

Under the ADA, regardless of whether a wellness program includes disability-related inquiries or medical examinations, reasonable accommodations must be provided, absent undue hardship, to enable employees with disabilities to earn whatever financial incentive an employer or other covered entity offers. Providing a reasonable alternative standard and notice to the employee of the availability of a reasonable alternative under HIPAA and the Affordable Care Act as part of a health-contingent program would likely fulfill a covered entity's obligation to provide a reasonable accommodation under the ADA. However, under the ADA, a covered entity would have to provide a reasonable accommodation for a participatory program even though HIPAA and the Affordable Care Act do not require such programs to offer a reasonable alternative standard.

For example, an employer that offers employees a financial incentive to attend a nutrition class, regardless of whether they reach a healthy weight as a result, would have to provide a sign language interpreter so that an employee who is deaf and who needs an interpreter to understand the information communicated in the class could earn the incentive, as long as providing the interpreter would not result in undue hardship to the employer. Similarly, an employer would, absent undue hardship, have to provide written materials that are part of a wellness program in an alternate format, such as in large print or on computer disk, for someone with a vision impairment. An individual with a disability also may need a reasonable accommodation to participate in a wellness program that includes disability-related inquiries or medical examinations, including waiver of a generally applicable requirement. For example, an employer that offers a reward for completing a biometric screening that includes a blood draw would have to provide an alternative test (or certification requirement) so that an employee with a disability that makes drawing blood dangerous can participate and earn the incentive.

Application of Section 1630.14(d)(3) to Smoking Cessation Programs

Regulations implementing the wellness provisions in HIPAA, as amended by the Affordable Care Act, permit covered entities to offer incentives as high as 50 percent of the total cost of employee coverage for tobacco-related wellness programs, such as smoking cessation programs. As noted above, the incentive rules in Section 1630.14(d)(3) apply only to employee health programs that include disability-related inquiries or medical examinations. A smoking cessation program that merely asks employees whether

or not they use tobacco (or whether or not they ceased using tobacco upon completion of the program) is not an employee health program that includes disability-related inquiries or medical examinations. The incentive rules in Section 1630.14(d)(3) would not apply to incentives a covered entity could offer in connection with such a program. Therefore, a covered entity would be permitted to offer incentives as high as 50 percent of the cost of employee coverage for that smoking cessation program, pursuant to the regulations implementing HIPAA, as amended by the Affordable Care Act, without implicating the disability-related inquiries or medical examinations provision of the ADA. The ADA nondiscrimination requirements, such as the need to provide reasonable accommodations that provide employees with disabilities equal access to benefits, would still apply.

By contrast, a biometric screening or other medical examination that tests for the presence of nicotine or tobacco is a medical examination. The ADA financial incentive rules discussed *supra* would therefore apply to a wellness program that included such a screening.

Section 1630.14(d)(4)–(6): Confidentiality

Paragraphs (d)(4) and (d)(5) say that medical records developed in the course of providing voluntary health services to employees, including wellness programs, must be maintained in a confidential manner and must not be used for any purpose in violation of this part, such as limiting insurance eligibility. *See* House Labor Report at 75; House Judiciary Report at 43–44. Further, although an exception to confidentiality that tracks the language of the ADA itself states that information gathered in the course of providing employees with voluntary health services may be disclosed to managers and supervisors in connection with necessary work restrictions or accommodations, such an exception would rarely, if ever, apply to medical information collected as part of a wellness program. In addition, as described more fully below, certain disclosures that are permitted for employee health programs generally may not be permissible under the HIPAA Privacy Rule for wellness programs that are part of a group health plan without the written authorization of the individual.

Section 1630.14(d)(6) says that a covered entity only may receive information collected as part of an employee health program in aggregate form that does not disclose, and is not reasonably likely to disclose, the identity of specific individuals except as is necessary to administer the plan or as permitted by section 1630.14(d)(4). Notably, both employers that sponsor employee health programs and the employee health programs themselves (if they are administered by the employer or qualify as the employer's agent) are responsible for ensuring compliance with this provision.

Where a wellness program is part of a group health plan, the individually identifiable health information collected from or created about participants as part of the wellness program is protected health information (PHI) under the HIPAA Privacy, Security, and Breach Notification Rules. (45 CFR parts 160 and 164.) The HIPAA Privacy, Security, and Breach Notification Rules apply to HIPAA covered entities, which include group health plans, and generally protect identifiable health information maintained by or on behalf of such entities, by among other provisions, setting limits and conditions on the uses and disclosures that may be made of such information.

PHI is information, including demographic data that identifies the individual or for which there is a reasonable basis to believe it can be used to identify the individual (including, for example, address, birth date, or social security number), and that relates to: An individual's past, present, or future physical or mental health or condition; the provision of health care to the individual; or the past, present, or future payment for the provision of health care to the individual. HIPAA covered entities may not disclose PHI to an individual's employer except in limited circumstances. For example, as discussed more fully below, an employer that sponsors a group health plan may receive PHI to administer the plan (without authorization of the individual), but only if the employer certifies to the plan that it will safeguard the information and not improperly use or share the information. *See Standards for Privacy of Individually Identifiable Health Information* (''Privacy Rule''), Pub. L. 104–191; 45 CFR part 160 and Part 164, Subparts A and E. However, there are no restrictions on the use or disclosure of health information that has been de-identified in accordance with the HIPAA Privacy Rule. Individuals may file a complaint with HHS if a health plan fails to comply with privacy requirements and HHS may impose civil money penalties for noncompliance.

A wellness program that is part of a HIPAA covered entity likely will be able to comply with its obligation under section 1630.14(d)(6) by complying with the HIPAA Privacy Rule. An employer that is a health plan sponsor and receives individually identifiable health information from or on behalf of the group health plan, as permitted by HIPAA when the plan sponsor is administering aspects of the plan, may generally satisfy its requirement to comply with section 1630.14(d)(6) by certifying to the group health plan, as provided by 45 CFR 164.504(f)(2)(ii), that it will not use or disclose the information for purposes not permitted by its plan documents and the Privacy Rule, such as for employment purposes, and abiding by that certification. Further, if an employer is not performing plan administration functions on behalf of the group health plan, it may receive aggregate information from the wellness program under section 1630.14(d)(6) only so long as the information is de-identified in accordance with the HIPAA Privacy Rule. In addition, disclosures of protected health information from the wellness program may only be made in accordance with the Privacy Rule. Thus, certain disclosures that are otherwise permitted under section 1630.14(d)(4) for employee health programs generally may not be permissible under the Privacy Rule for wellness programs that are part of a group health plan without the written authorization of the individual.

Employers and wellness program providers must take steps to protect the confidentiality of employee medical information provided as part of an employee health program. Some of the following steps may be required by law; others may be best practices. Proper training of individuals who handle medical information in the requirements of the HIPAA Rules, the ADA, and any other applicable privacy laws is critical. Employers and program providers should have clear privacy policies and procedures related to the collection, storage, and disclosure of medical information. On-line systems and other technology should guard against unauthorized access, such as through use of encryption for medical information stored electronically.

As a best practice, individuals who handle medical information that is part of an employee health program should not be responsible for making decisions related to employment, such as hiring, termination, or discipline. Use of a third-party vendor may reduce the risk that medical information will be disclosed to individuals who make employment decisions, particularly for employers whose organizational structure makes it difficult to provide adequate safeguards. If an employer uses a third-party vendor, it should be familiar with the vendor's privacy policies for ensuring the confidentiality of medical information. Employers that administer their own wellness programs need adequate firewalls in place to prevent unintended disclosure.

If individuals who handle medical information obtained through a wellness program also act as decision-makers (which may be the case for a small employer that administers its own wellness program), they may not use the information to discriminate on the basis of disability in violation of the ADA.

Breaches of confidentiality should be reported to affected employees immediately and should be thoroughly investigated. Employers should make clear that individuals responsible for disclosures of confidential medical information will be disciplined and should consider discontinuing relationships with vendors responsible for breaches of confidentiality.

Section 1630.14(d)(7): Compliance With Other Employment Nondiscrimination Laws

Finally, section 1630.14(d)(7) clarifies that compliance with the requirements of paragraph (d) of this section, including the limits on incentives applicable under the ADA, does not mean that a covered entity complies with other federal employment nondiscrimination laws, such as Title VII of the Civil Rights Act of 1964, 42 U.S.C. 2000e *et seq.,* the Equal Pay Act of 1963, 29 U.S.C. 206(d), the Age Discrimination in Employment Act of 1967, 29 U.S.C. 621 *et seq.,* Title II of the Genetic Information Nondiscrimination Act of 2008, 42 U.S.C. 2000ff *et seq.,* and other sections of Title I of the ADA. Thus, even though an employer's wellness program might comply with the incentive limits set out in paragraph (d)(3), the employer would violate federal nondiscrimination statutes if that program

discriminates on the basis of race, sex, national origin, or age.

[FR Doc. 2015–08827 Filed 4–16–15; 11:15 am]

BILLING CODE 6570–01–P

DEPARTMENT OF THE INTERIOR

Bureau of Safety and Environmental Enforcement

30 CFR Parts 250 and 254

Bureau of Ocean Energy Management

30 CFR Part 550

[Docket ID: BSEE–2013–0011; 15XE1700DX EX1SF0000.DAQ000 EEEE500000]

RIN 1082–AA00

Oil and Gas and Sulphur Operations on the Outer Continental Shelf—Requirements for Exploratory Drilling on the Arctic Outer Continental Shelf

AGENCY: Bureau of Safety and Environmental Enforcement (BSEE), Interior; Bureau of Ocean Energy Management (BOEM), Interior.

ACTION: Extension of comment period for Notice of Proposed Rulemaking

SUMMARY: BOEM and BSEE are extending the public comment period on the Notice of Proposed Rulemaking entitled, ''Oil and Gas and Sulphur Operations on the Outer Continental Shelf—Requirements for Exploratory Drilling on the Arctic Outer Continental Shelf,'' which was published in the **Federal Register** on February 24, 2015, (80 FR 9916). The original public comment period would have ended on April 27, 2015. However, BOEM and BSEE have received public comments requesting an extension of the comment period. BOEM and BSEE have reviewed the extension requests and determined that a 30-day comment period extension to May 27, 2015, is appropriate.

DATES: The comment period for the Notice of Proposed Rulemaking published on February 24, 2015, (80 FR 9916) has been extended. Written comments must be received by the extended due date of May 27, 2015. BOEM and BSEE may not fully consider comments received after this date.

ADDRESSES: You may submit comments on the proposed rulemaking by any of the following methods. Please use the Regulation Identifier Number (RIN) 1082–AA00 as an identifier in your message. For comments specifically related to the draft Environmental Assessment conducted under the National Environmental Policy Act of 1969 (NEPA), please refer to NEPA in the heading of your message.

- Federal eRulemaking Portal: *http://www.regulations.gov.* In the entry entitled ''Enter Keyword or ID'', enter BSEE–2013–0011 then click search. Follow the instructions to submit public comments and view supporting and related materials available for this rulemaking. BOEM and BSEE may post all submitted comments in their entirety.
- Mail or hand-carry comments to the Department of the Interior (DOI); Bureau of Safety and Environmental Enforcement; Attention: Regulations and Standards Branch; 45600 Woodland Road, Sterling, Virginia 20166. Please reference ''Oil and Gas and Sulphur Operations on the Outer Continental Shelf—Requirements for Exploratory Drilling on the Arctic Outer Continental Shelf, 1082–AA00'' in your comments and include your name and return address. Please note that this address for BSEE is new; however, any comments already submitted to BSEE's former address (381 Elden Street, Herndon, Virginia 20181) do not need to be resubmitted to the new address.
- Public Availability of Comments—Before including your address, phone number, email address, or other personal identifying information in your comment, you should be aware that your entire comment—including your personal identifying information—may be made publicly available at any time. While you can ask us in your comment to withhold your personal identifying information from public review, we cannot guarantee that we will be able to do so.

FOR FURTHER INFORMATION CONTACT: Mark E. Fesmire, BSEE, Alaska Regional Office, *mark.fesmire@bsee.gov,* (907) 334–5300; John Caplis, BSEE, Oil Spill Response Division, *john.caplis@bsee.gov,* (703) 787–1364; or David Johnston, BOEM, Alaska Regional Office, *david.johnston@boem.gov,* (907) 334–5200.

SUPPLEMENTARY INFORMATION: BOEM and BSEE published a notice of proposed rulemaking on Requirements for Exploratory Drilling on the Arctic Outer Continental Shelf (OCS) on February 24, 2015 (80 FR 9916). This proposed rule is intended to provide regulations to ensure Arctic OCS exploratory drilling operations are conducted in a safe and responsible manner that takes into account the unique conditions of Arctic OCS drilling and Alaska Natives' cultural traditions and need to access subsistence resources. The Arctic region is known for its oil and gas resource potential, its vibrant ecosystems, and the Alaska Native communities, who rely on the Arctic's resources for subsistence and cultural traditions. The region is also characterized by extreme environmental conditions, geographic remoteness, and a relative lack of fixed infrastructure and existing operations.

The proposed rule would add to, and revise existing regulations in, 30 CFR parts 250, 254, and 550 for Arctic OCS oil and gas activities. The proposed rule would focus on Arctic OCS exploratory drilling activities that use mobile offshore drilling units, and related operations during the Arctic OCS open-water drilling season.

After publication of the proposed rule, BOEM and BSEE received public comments asking BOEM and BSEE to extend the comment period on the proposed rule by 60 days. BOEM and BSEE are extending the original 60-day comment period by an additional 30 days to provide additional time for review of and comment on the Notice of Proposed Rulemaking. Accordingly, written comments must be submitted by the extended due date of May 27, 2015. BOEM and BSEE may not fully consider comments received after this date.

Dated: April 14, 2015.

Janice M. Schneider,

Assistant Secretary Land and Minerals Management.

[FR Doc. 2015–09035 Filed 4–17–15; 8:45 am]

BILLING CODE 4310–VH–P; 4310–MR–P

DEPARTMENT OF HOMELAND SECURITY

Coast Guard

33 CFR Part 165

[Docket No. USCG–2015–0178]

RIN 1625–AA00

Safety Zone, Volvo Ocean Race Newport; East Passage, Narragansett Bay, RI

AGENCY: Coast Guard, DHS.

ACTION: Notice of proposed rulemaking.

SUMMARY: The Coast Guard proposes to establish a safety zone in the navigable waters of the East Passage, Narragansett Bay, RI, during the Volvo Ocean Race Newport marine event. This safety zone is intended to safeguard mariners from the hazards associated with high-speed, high-performance sailing vessels competing in inshore races on the waters of the East Passage, Narragansett Bay, RI. Vessels would be prohibited from entering into, transiting through, mooring, or anchoring within this safety

zone during periods of enforcement unless authorized by the Captain of the Port (COTP), Southeastern New England or the COTP's designated representative.

DATES: Comments and related material must be received by the Coast Guard on or before April 27, 2015. Requests for public meetings must be received by the Coast Guard on or before April 27, 2015.

ADDRESSES: You may submit comments identified by docket number USCG–2015–0178 using any one of the following methods:

(1) *Federal e-Rulemaking Portal: http://www.regulations.gov.*

(2) *Fax:* 202–493–2251.

(3) *Mail or Delivery:* Docket Management Facility (M–30), U.S. Department of Transportation, West Building Ground Floor, Room W12–140, 1200 New Jersey Avenue SE., Washington, DC 20590–0001. Deliveries accepted between 9 a.m. and 5 p.m., Monday through Friday, except federal holidays. The telephone number is 202–366–9329.

See the ''Public Participation and Request for Comments'' portion of the **SUPPLEMENTARY INFORMATION** section below for further instructions on submitting comments. To avoid duplication, please use only one of these three methods.

FOR FURTHER INFORMATION CONTACT: If you have questions on this proposed rule, contact Mr. Edward G. LeBlanc, Waterways Management Division at Coast Guard Sector Southeastern New England, telephone 401–435–2351, email *Edward.G.LeBlanc@uscg.mil.* If you have questions on viewing or submitting material to the docket, call Barbara Hairston, Program Manager, Docket Operations, telephone 202–366–9826.

SUPPLEMENTARY INFORMATION:

Table of Acronyms

DHS Department of Homeland Security
FR Federal Register
NPRM Notice of Proposed Rulemaking

A. Public Participation and Request for Comments

We encourage you to participate in this rulemaking by submitting comments and related materials. All comments received will be posted without change to *http://www.regulations.gov* and will include any personal information you have provided.

1. Submitting Comments

If you submit a comment, please include the docket number for this rulemaking (USCG–2015–0178), indicate the specific section of this document to which each comment applies, and provide a reason for each suggestion or recommendation. You may submit your comments and material online (via *http://www.regulations.gov*) or by fax, mail, or hand delivery, but please use only one of these means. If you submit a comment online via *http://www.regulations.gov,* it will be considered received by the Coast Guard when you successfully transmit the comment. If you fax, hand deliver, or mail your comment, it will be considered as having been received by the Coast Guard when it is received at the Docket Management Facility. We recommend that you include your name and a mailing address, an email address, or a telephone number in the body of your document so that we can contact you if we have questions regarding your submission.

To submit your comment online, go to *http://www.regulations.gov,* type the docket number [USCG–2015–0178] in the ''SEARCH'' box and click ''SEARCH.'' Click on ''Submit a Comment'' on the line associated with this rulemaking.

If you submit your comments by mail or hand delivery, submit them in an unbound format, no larger than 8½ by 11 inches, suitable for copying and electronic filing. If you submit comments by mail and would like to know that they reached the Facility, please enclose a stamped, self-addressed postcard or envelope. We will consider all comments and material received during the comment period and may change the rule based on your comments.

2. Viewing Comments and Documents

To view comments, as well as documents mentioned in this preamble as being available in the docket, go to *http://www.regulations.gov,* type the docket number (USCG–2015–0178) in the ''SEARCH'' box and click ''SEARCH.'' Click on Open Docket Folder on the line associated with this rulemaking. You may also visit the Docket Management Facility in Room W12–140 on the ground floor of the Department of Transportation West Building, 1200 New Jersey Avenue SE., Washington, DC 20590, between 9 a.m. and 5 p.m., Monday through Friday, except Federal holidays.

3. Privacy Act

Anyone can search the electronic form of comments received into any of our dockets by the name of the individual submitting the comment (or signing the comment, if submitted on behalf of an association, business, labor union, etc.). You may review a Privacy Act notice regarding our public dockets in the January 17, 2008, issue of the **Federal Register** (73 FR 3316).

4. Public Meeting

We do not now plan to hold a public meeting. But you may submit a request for one, using one of the methods specified under **ADDRESSES**. Please explain why you believe a public meeting would be beneficial. If we determine that one would aid this rulemaking, we will hold one at a time and place announced by a later notice in the **Federal Register**.

B. Regulatory History and Information

The Coast Guard has not promulgated a rule for past iterations of this event.

C. Basis and Purpose

The legal basis for the proposed rule is 33 U.S.C. 1231; 50 U.S.C. 191; 33 CFR 1.05–1, 6.04–1, 6.04–6, and 160.5; Department of Homeland Security Delegation No. 0170.1, which collectively authorize the Coast Guard to define safety zones.

This rule is necessary to provide for the safety of life and navigation, for both participants and spectators involved with the Volvo Ocean Race Newport in the vicinity of Newport, RI.

D. Discussion of Proposed Rule

The Volvo Ocean Race is a 40,000 mile, eight-month, round the world race with stops in several major international sailing ports. As part of the event, high-speed sailing vessels will participate in daily inshore races from 12–17 May, 2015, in the East Passage of Narragansett Bay in the vicinity of Newport, RI. As these races are part of a world-wide event they are expected to generate national and international media coverage, and attract spectators on a number of recreational and excursion vessels.

The Coast Guard is establishing this safety zone, in conjunction with the Volvo Ocean Race Newport, to ensure the protection of the maritime public and event participants from the hazards associated with large-scale marine events. The Coast Guard anticipates some concern with the proposed safety zone by mariners, especially commercial vessel operators, that vessel transits through the East Passage of Narragansett Bay may be restricted for a portion of each day for 6 consecutive days.

The East Passage of Narragansett Bay is the site of many marine events each year. As a result, vessel traffic, particularly recreational vessel traffic, is frequently required to utilize the West

Passage of Narragansett Bay. Accordingly, the West Passage of Narragansett Bay may be a viable option for recreational vessels as well as many tug/barge combinations and smaller commercial vessels during the Volvo Ocean Race Newport.

Regardless, the Coast Guard anticipates that some commercial and/or recreational vessels may still need to transit the East Passage of Narragansett Bay for a variety of reasons, including destination, familiarity with the waterway, tide restrictions, etc. Vessels may be able to continue transits through the East Passage, even during enforcement of the safety zone, as there will be sufficient room for most recreational vessels, and some commercial vessels, to pass to the west of the safety zone. Also, the Coast Guard routinely works with the local marine pilot organization and shipping agents to coordinate vessel transits during marine events in the East Passage, and will continue to do so for the entire event to avoid major interruptions to shipping schedules.

The Coast Guard proposes to add a temporary safety zone under 33 CFR 165.T01–0178. The safety zone will extend from Newport Harbor in the vicinity of Fort Adams, across the East Passage to west of Rose Island, and will encompass the East Passage south to the vicinity of Castle Hill. The safety zone will be enforced only during times of actual sailing vessel racing.

E. Regulatory Analyses

We developed this proposed rule after considering numerous statutes and executive orders related to rulemaking. Below we summarize our analyses based on 13 of these statutes or executive orders.

1. Executive Order 12866 and Executive Order 13563

This proposed rule is not a significant regulatory action under section 3(f) of Executive Order 12866, Regulatory Planning and Review, as supplemented by Executive Order 13563, and does not require an assessment of potential costs and benefits under section 6(a)(3) of that Order. The Office of Management and Budget has not reviewed it under that Order.

We expect the adverse economic impact of this proposed rule to be minimal. Although this regulation may have some adverse impact on the public, the potential impact will be minimized for the following reasons: Although the safety zone will be in effect for 8 hours each day for 6 consecutive days, vessels will only be restricted from the zone in the East Passage of Narragansett Bay during those limited periods when the races are actually ongoing; during periods when there is no actual racing (*e.g.,* racing vessels are transiting from the pier to the racing site; downtime between races, etc.) vessels may be allowed to transit through the safety zone; there is an alternate route, the West Passage of Narragansett Bay, that does not add substantial transit time, is already routinely used by mariners, and will not be affected by this safety zone; many vessels, especially recreational vessels, may transit in all portions of the affected waterway except for those areas covered by the proposed safety zone; and vessels may enter or pass through the affected waterway with the permission of the COTP or the COTP's representative.

Notification of the Volvo Ocean Race Newport and the associated safety zone will be made to mariners through the Rhode Island Port Safety Forum, local Notice to Mariners, event sponsors, and local media well in advance of the event.

2. Impact on Small Entities

The Regulatory Flexibility Act of 1980 (RFA), 5 U.S.C. 601–612, as amended, requires federal agencies to consider the potential impact of regulations on small entities during rulemaking. The term ''small entities'' comprises small businesses, not-for-profit organizations that are independently owned and operated and are not dominant in their fields, and governmental jurisdictions with populations of less than 50,000. The Coast Guard certifies under 5 U.S.C. 605(b) that this proposed rule will not have a significant economic impact on a substantial number of small entities.

This proposed rule would affect the following entities, some of which might be small entities: Owners or operators of vessels intending to transit, fish, or anchor in the East Passage of Narragansett Bay, RI, during the Volvo Ocean Race Newport sailing races.

If you think that your business, organization, or governmental jurisdiction qualifies as a small entity and that this rule would have a significant economic impact on it, please submit a comment (see **ADDRESSES**) explaining why you think it qualifies and how and to what degree this rule would economically affect it.

3. Assistance for Small Entities

Under section 213(a) of the Small Business Regulatory Enforcement Fairness Act of 1996 (Pub. L. 104–121), we want to assist small entities in understanding this proposed rule so that they can better evaluate its effects on them and participate in the rulemaking. If the rule would affect your small business, organization, or governmental jurisdiction and you have questions concerning its provisions or options for compliance, please contact the person listed under **FOR FURTHER INFORMATION CONTACT**. The Coast Guard will not retaliate against small entities that question or complain about this proposed rule or any policy or action of the Coast Guard.

4. Collection of Information

This proposed rule would call for no new collection of information under the Paperwork Reduction Act of 1995 (44 U.S.C. 3501–3520).

5. Federalism

A rule has implications for federalism under Executive Order 13132, Federalism, if it has a substantial direct effect on State or local governments and would either preempt State law or impose a substantial direct cost of compliance on them. We have analyzed this proposed rule under that Order and have determined that it does not have implications for federalism.

6. Protest Activities

The Coast Guard respects the First Amendment rights of protesters. Protesters are asked to contact the person listed in the **FOR FURTHER INFORMATION CONTACT** section to coordinate protest activities so that your message can be received without jeopardizing the safety or security of people, places or vessels.

7. Unfunded Mandates Reform Act

The Unfunded Mandates Reform Act of 1995 (2 U.S.C. 1531–1538) requires Federal agencies to assess the effects of their discretionary regulatory actions. In particular, the Act addresses actions that may result in the expenditure by a State, local, or tribal government, in the aggregate, or by the private sector of $100,000,000 (adjusted for inflation) or more in any one year. Though this proposed rule would not result in such expenditure, we do discuss the effects of this rule elsewhere in this preamble.

8. Taking of Private Property

This proposed rule would not cause a taking of private property or otherwise have taking implications under Executive Order 12630, Governmental Actions and Interference with Constitutionally Protected Property Rights.

9. Civil Justice Reform

This proposed rule meets applicable standards in sections 3(a) and 3(b)(2) of

Executive Order 12988, Civil Justice Reform, to minimize litigation, eliminate ambiguity, and reduce burden.

10. Protection of Children From Environmental Health Risks

We have analyzed this proposed rule under Executive Order 13045, Protection of Children from Environmental Health Risks and Safety Risks. This rule is not an economically significant rule and would not create an environmental risk to health or risk to safety that might disproportionately affect children.

11. Indian Tribal Governments

This proposed rule does not have tribal implications under Executive Order 13175, Consultation and Coordination with Indian Tribal Governments, because it would not have a substantial direct effect on one or more Indian tribes, on the relationship between the Federal Government and Indian tribes, or on the distribution of power and responsibilities between the Federal Government and Indian tribes.

12. Energy Effects

This proposed rule is not a ''significant energy action'' under Executive Order 13211, Actions Concerning Regulations That Significantly Affect Energy Supply, Distribution, or Use.

13. Technical Standards

This proposed rule does not use technical standards. Therefore, we did not consider the use of voluntary consensus standards.

14. Environment

We have analyzed this proposed rule under Department of Homeland Security Management Directive 023–01 and Commandant Instruction M16475.lD, which guide the Coast Guard in complying with the National Environmental Policy Act of 1969 (NEPA) (42 U.S.C. 4321–4370f), and have made a preliminary determination that this action appears to be one of a category of actions which do not individually or cumulatively have a significant effect on the human environment.

A preliminary environmental analysis checklist supporting this determination is available in the docket where indicated under **ADDRESSES**. This proposed rule involves the establishment of a temporary safety zone in conjunction with the Volvo Ocean Race Newport event, a high-speed, high-performance sailing vessel racing event. It appears that this action will qualify for Coast Guard Categorical Exclusion (34)(g), as described in figure 2–1 of the Commandant Instruction.

We seek any comments or information that may lead to the discovery of a significant environmental impact from this proposed rule.

List of Subjects in 33 CFR Part 165

Harbors, Marine safety, Navigation (water), Reporting and recordkeeping requirements, Security measures, Waterways.

For the reasons discussed in the preamble, the Coast Guard proposes to amend 33 CFR part 165 as follows:

PART 165—REGULATED NAVIGATION AREAS AND LIMITED ACCESS AREAS

■ 1. The authority citation for part 165 continues to read as follows:

Authority: 33 U.S.C. 1231; 50 U.S.C. 191; 33 CFR 1.05–1, 6.04–1, 6.04–6, and 160.5; Department of Homeland Security Delegation No. 0170.1.

■ 2. Add § 165.T01–0178 to read as follows:

§ 165.T01–0178 Safety Zone for Volvo Ocean Race Newport, East Passage, Narragansett Bay, RI.

(a) *Location.* The following area is a safety zone: From an east-west line across the East Passage of Narragansett Bay at the Newport Bridge south to the COLREGS demarcation line between Brenton Pt and Beavertail Pt.

(b) *Enforcement period.* Vessels will be prohibited from entering this safety zone, when enforced, during the Volvo Ocean Race Newport sailing vessel racing event between 9 a.m. and 5 p.m. from Tuesday, May 12, 2015 to Sunday, May 17, 2015.

(c) *Definitions.* The following definitions apply to this section:

(1) *Designated representative.* A ''designated representative'' is any Coast Guard commissioned, warrant or petty officer of the U.S. Coast Guard who has been designated by the Captain of the Port, Sector Southeastern New England (COTP), to act on his or her behalf. The designated representative may be on an official patrol vessel or may be on shore and will communicate with vessels via VHF–FM radio or loudhailer. In addition, members of the Coast Guard Auxiliary may be present to inform vessel operators of this regulation.

(2) *Official patrol vessels.* Official patrol vessels may consist of any Coast Guard, Coast Guard Auxiliary, state, or local law enforcement vessels assigned or approved by the COTP.

(3) *Patrol commander.* The Coast Guard may patrol each safety zone under the direction of a designated Coast Guard Patrol Commander. The Patrol Commander may be contacted on Channel 16 VHF–FM (156.8 MHz) by the call sign ''PATCOM.''

(4) *Spectators.* All persons and vessels not registered with the event sponsor as participants or official patrol vessels.

(d) *Regulations.* (1) The general regulations contained in § 165.23 as well as the following regulations apply to the safety zone established in conjunction with the Volvo Ocean Race Newport, East Passage, Narragansett Bay, Newport, RI. These regulations may be enforced for the duration of the event.

(2) No later than 8 a.m. each day of the event, the Coast Guard will announce via Safety Marine Information Broadcasts and local media the times and duration of each sailing race scheduled for that day, and the precise area(s) of the safety zone that will be enforced.

(3) Vessels may not transit through or within the safety zone during periods of enforcement without Patrol Commander approval. Vessels permitted to transit must operate at a no-wake speed, in a manner which will not endanger participants or other crafts in the event.

(4) Spectators or other vessels shall not anchor, block, loiter, or impede the movement of event participants or official patrol vessels in the safety zone unless authorized by an official patrol vessel.

(5) The Patrol Commander may control the movement of all vessels in the safety zone. When hailed or signaled by an official patrol vessel, a vessel shall come to an immediate stop and comply with the lawful directions issued. Failure to comply with a lawful direction may result in expulsion from the area, citation for failure to comply, or both.

(6) The Patrol Commander may delay or terminate the Volvo Ocean Race at any time to ensure safety. Such action may be justified as a result of weather, traffic density, spectator operation or participant behavior.

Dated: March 27, 2015.

J.T. Kondratowicz,

Captain, U.S. Coast Guard, Captain of the Port Southeastern New England.

[FR Doc. 2015–08918 Filed 4–17–15; 8:45 am]

BILLING CODE 9110–04–P

DEPARTMENT OF THE INTERIOR

National Park Service

36 CFR Part 2

[NPS–WASO–AILO–15846; PCU00RP14.R50000, PPWOCRADI0]

RIN 1024–AD84

Gathering of Certain Plants or Plant Parts by Federally Recognized Indian Tribes for Traditional Purposes

AGENCY: National Park Service, Interior.

ACTION: Proposed rule.

SUMMARY: The National Park Service proposes to authorize agreements between the National Park Service and federally recognized Indian tribes to allow the gathering and removal of plants or plant parts by designated tribal members for traditional purposes. The agreements would facilitate continuation of tribal cultural traditions on traditionally associated lands that are now included within units of the National Park System without a significant adverse impact to park resources and values. The proposed rule respects tribal sovereignty and the government-to-government relationship between the United States and the tribes, and would provide system-wide consistency to this aspect of National Park Service-tribal relations. The proposed rule would provide opportunities for tribal youth, the National Park Service, and the public to understand tribal traditions.

DATES: Comments must be received by July 20, 2015. Comments on the information collection requirements must be received by May 20, 2015.

ADDRESSES: You may submit your comments, identified by Regulation Identifier Number (RIN) 1024–AD84, by any of the following methods:

- *Federal Rulemaking Portal: http://www.regulations.gov.* Follow the instructions for submitting comments.
- *Mail:* National Park Service, Joe Watkins, Office of Tribal Relations and American Cultures, 1201 Eye Street NW., Washington, DC 20005.
- All submissions received must include the agency name and RIN. For additional information see Public Participation under **SUPPLEMENTARY INFORMATION**.
- Send your comments and suggestions on the information collection requirements to the Desk Officer for the Department of the Interior at OMB–OIRA at (202) 395–5806 (fax) or *OIRA_Submission@omb.eop.gov* (email). Please provide a copy of your comments to the Information Collection Clearance Officer, National Park Service, 1849 C Street NW., Washington, DC 20240 (mail); or *madonna_baucum@nps.gov* (email). Please reference ''1024–AD84'' in the subject line of your comments. You may review our Information Collection Request online at *http://www.reginfo.gov.* Follow the instructions to review Department of the Interior collections under review by OMB.

FOR FURTHER INFORMATION CONTACT: National Park Service, Joe Watkins, Office of Tribal Relations and American Cultures, 1201 Eye Street NW., Washington, DC 20005, 202–354–2126, *joe_watkins@nps.gov.*

SUPPLEMENTARY INFORMATION:

Background

The National Park Service (NPS) has a unique relationship with Indian tribes that is strengthened by a shared commitment to stewardship of the land and resources. This relationship is augmented by the historical, cultural, and spiritual relationships that Indian tribes have with the park lands and resources with which they are traditionally associated.

Indian tribes practiced their traditional harvests of plants and plant parts on or from lands that are now included in units of the National Park System long before the arrival of the European settlers. Much of this activity was prohibited upon the promulgation of 36 CFR part 2 in 1983. The fundamental purpose of the proposed rule is to lift this prohibition and allow for gathering and removal of traditional plants or plant parts while ensuring there is no significant adverse impact to park resources and values. The proposed rule would also provide opportunities for tribal youth, the NPS, and the public to understand tribal traditions.

The NPS is responsible for managing all units of the National Park System in such a manner and by such means as will leave them unimpaired for future generations. Park managers are given the discretion to manage public use within the parks in a manner that ensures that there is no impairment.

Managing the various areas of the National Park System in a manner that helps tribes maintain their cultural traditions and relationships with the land may contribute to the protection and stewardship of such areas. The sustainable uses envisioned by the proposed rule would approximate some part of the pre-existing, pre-European environment of the park and thus would not be considered to be consumptive use. The proposed rule would provide a recognized exception to current regulations by offering resource and location-specific agreements between the NPS and federally recognized Indian tribes to gather and remove plants or plant parts for traditional purposes.

Cooperation in the continuation of tribal traditions is at the heart of this proposed rule change. The NPS has a long history of encouraging Indian arts and crafts in national parks for the education and enjoyment of the public, and to support the continued practice of cultural traditions. The teaching and sharing of tribal traditions associated with national parks is an important part of the NPS mission. The proposed rule would provide new opportunities for the NPS and tribal governments to work together in support of the continuation of sustainable Indian cultural traditions that make up a unique and irreplaceable part of our national heritage. Limited gathering by hand of certain renewable natural resources has been allowed by the NPS for more than 50 years. See 36 CFR 1.2(c) (1960) (authorizing hand picking and eating of designated native fruits and berries). In 1966, the NPS expanded this authority for NPS recreation areas, authorizing the gathering and collection of reasonable quantities of natural, renewable products (*e.g.* seashells, fruits, berries, driftwood, and marine deposits of natural origin) for personal, non-commercial use. (31 FR 16651, December 29, 1966).

Existing NPS regulations at 36 CFR 2.1(c), promulgated in 1983, allow for the personal consumption of ''fruits, berries, nuts, or unoccupied seashells'' by the general public, subject to certain conditions. The proposed rule would be an additional form of gathering, but would be limited to only members of federally recognized Indian tribes that have traditional associations with specific park areas and resources and that wish their members to be able to gather and remove plants or plant parts within those park areas for traditional uses.

Existing NPS regulations at 36 CFR 2.1(d) do not allow tribes or tribal members to gather plants or plant parts on parklands for traditional purposes except where specific statutes or treaties grant rights to do so. However, traditional tribal gathering and removal occurred in many areas that are now part of the National Park System. The proposed rule would provide an orderly and consistent process for such gathering and removal by authorizing agreements between the NPS and federally recognized Indian tribes to

gather and remove plants or plant parts for traditional purposes.

In designing the proposed rule, the NPS has applied principles used by Congress when it has addressed the issue of tribal gathering, usually in the context of establishing new units of the National Park System or establishing new management systems within existing units. For instance, the enabling legislation for El Malpais National Monument, New Mexico, states: ''In recognition of the past use of portions of the monument and the conservation area by Indian people for traditional cultural and religious purposes, the Secretary shall assure nonexclusive access to the monument . . . by Indian people for traditional cultural and religious purposes, including the harvesting of pine nuts.'' (Pub. L. 100–225, 101 Stat. 1548). In this and other cases, Congress has provided for gathering on parklands by traditionally associated Indian tribes for traditional purposes that predate the establishment of the park. It is, however, impractical to seek specific legislative language for each unit of the National Park System in which there were individual tribal traditional uses.

In the 20 years since Indian tribes brought the issue of gathering to the attention of NPS leadership, studies in the fields of ethnobotany, traditional plant management, and consideration of traditional ecological knowledge in scientific symposia and scholarly gatherings have increased greatly. Research has shown that traditional gathering, when done with traditional methods and in traditionally established quantities, does not impair the ability to conserve plant communities and can help to conserve them, thus supporting the NPS conclusion that cooperation with Indian tribes in the management of plant resources is consistent with the preservation of national park lands for all American people. This concept is incorporated into *National Park Service Management Policies 2006* at Section 4.2.1, which directs the NPS to inventory, monitor, and research traditional knowledge and authorizes the NPS to support studies designed to ''understand the ceremonial and traditional resource management practices of Native Americans. . . .'' The NPS and tribal governments can draw on this research and may conduct further research to ensure that traditional tribal gathering and removal does not have a significant adverse impact on park resources and values. To the extent that it is appropriate, park visitors can learn about the cultures associated with traditional tribal gathering practices. The proposed rule would require that environmental reviews and further studies be undertaken, as needed, prior to entering into agreements that would allow gathering and removal in national park units. These environmental reviews would include consulting with other, nearby tribes, especially those tribes that may also have traditional associations with those park units.

Authority

Authority for the proposed rule is the statute commonly known as the NPS Organic Act of 1916, as amended. The NPS Organic Act created the NPS and defined its purpose by stating that the NPS shall promote and regulate the use of the National Park System by means and measures that conform to the fundamental purpose of the System units, which purpose is to conserve the scenery, natural and historic objects, and wild life in the System units and to provide for the enjoyment of the scenery, natural and historic objects, and wild life in such manner and by such means as will leave them unimpaired for the enjoyment of future generations. (54 U.S.C. 100101)

The Organic Act further authorizes the Secretary of the Interior to make ''such regulations as the Secretary considers necessary or proper for the use and management of [National Park] System units.'' (54 U.S.C. 100751(a)).

The proposed rule would authorize the NPS to enter into agreements with federally recognized Indian tribes to allow for the gathering and removal of plants or plant parts for traditional purposes. The proposed rule is intended to continue Indian tribal cultural traditions that are rooted in the history of specific parks.

Government-to-Government Relationship With Indian Tribes

In accordance with the President's memorandum of April 29, 1994, ''Government-to-Government Relations with Native American Tribal Governments'' (59 FR 22951); Executive Order 13175, ''Consultation and Coordination with Indian Tribal Governments,'' of November 6, 2000; President Obama's Executive Memorandum on Tribal Consultation of November 5, 2009; Department of the Interior Secretarial Order No. 3317 of December 1, 2011, and Department of the Interior Departmental Manual Part 512,''American Indian and Alaska Native Programs;'' we have evaluated the potential effects on federally recognized Indian tribes and have determined that this proposed rule would have direct tribal implications.

Tribal Consultation

Six tribal consultation meetings were held in the ''Lower 48'' to consult with Indian tribes on this proposed rule. Locations in or near units of the National Park System where gathering by tribal members has been discussed over the years were selected in consultation with Indian tribes and NPS regional and park staff. One hundred and fifty representatives from 50 tribes attended meetings held from May through July 2010, in Bar Harbor, Maine; Flagstaff, Arizona; Pipestone, Minnesota; Yurok, California; Suquamish, Washington; and Cherokee, North Carolina. An additional meeting was held at Pipestone, Minnesota, in September 2010. Staff in Alaska contacted more than 70 federally recognized Indian tribes traditionally associated with parks in Alaska. Consultation then occurred with those tribes that requested it. Additionally, general presentations were given at two statewide conventions: The Alaska Tribal Leaders Summit in Fairbanks during the annual meetings of the Alaska Federation of Natives in October 2010 and at the annual Bureau of Indian Affairs Providers Conference in Anchorage in December 2010. A conference call with traditional elders and tribal people not representing tribal governments was also conducted in June 2010 at the request of Arvol Looking Horse, Keeper of the Sacred White Buffalo Calf Pipe of the Lakota, Dakota, and Nakota Nation of the Sioux. Park managers and staff also attended these consultation meetings and participated in the discussions. The major concerns of representatives of tribal governments and the NPS are summarized and addressed here.

Gathering To Be Limited to Members of Federally Recognized Indian Tribes

Tribal representatives expressed support for the concept that only members of federally recognized Indian tribes be allowed to gather and remove park resources for traditional purposes. The proposed rule limits gathering and removal to members of an Indian tribe or Alaska Native tribe, band, nation, pueblo, village or community that the Secretary of the Interior acknowledges to exist as an Indian tribe under the Federally Recognized Tribe List Act of 1994, 25 U.S.C. 479a. This provision will limit gathering and removal to members of Indian tribes with which the United States has a government-to-government relationship. The proposed rule provides avenues for cooperative NPS-tribal government oversight of member activities on park lands to

ensure that traditional gathering and removal remains sustainable with no significant adverse impacts to park resources and values, consistent with NPS Management Policies 2006, 8.2.

Gathering To Be Limited to Those Indian Tribes Traditionally Associated With Specific Park Lands

A central purpose of the proposed rule is to support the continuation of Indian cultural traditions on lands that are now administered as units of the National Park System. The proposed rule would apply only to those Indian tribes traditionally associated with specific park units. The concept of acknowledging and respecting the special and longstanding connections that Indian tribes have with parklands prior to the establishment of park units is specifically described in NPS Management Policies 2006, 1.11.

Government-to-Government Agreements

The NPS and tribal representatives expressed support for agreements between tribal governments and the NPS to establish the conditions for gathering in park units. These agreements would respect both tribal sovereignty and NPS authority to manage park resources. These agreements would authorize traditional tribal gathering in ways that could be administered flexibly to respond to local resource concerns. The participating tribal government would be responsible for designating which tribal members would be allowed to gather in accordance with the terms and conditions set forth in the agreement.

Park Resource Protection

Tribal representatives expressed deep concern for the long-term health of park ecosystems. Reminding the NPS of their long history of productive and protective relationships with such ecosystems, they expressed willingness to accept limitations on gathering to protect park resources. The NPS and tribal representatives are interested in jointly developing park specific plant gathering management plans to ensure the long-term health of any park resource that may be gathered.

Respect for Tribal Cultural Traditions

Tribal representatives stressed that each Indian tribe is unique, and that tribal agreements entered into under the proposed rule should allow for traditional cultural practices specific to each tribe.

Traditional Gathering Needs May Be Site-Specific to National Park Land

Some national park units contain places where tribal members historically have gathered plant resources. Using a particular gathering site within a national park unit may be vital to the continuation of a cultural tradition that cannot be met at locations outside the park, or even at alternative locations within it. Thus, even though some plant materials may be available outside park lands, tribal members may still reasonably desire to gather at traditionally significant locations inside a park unit. The rationale for in-park gathering of materials available outside park boundaries needs to be documented on a case-by-case basis as outlined in § 2.6(d) of the proposed rule. The information used to make this determination may be subject to peer review by qualified specialists from both the tribal and academic communities.

Collaborative Research and Administration

Tribal representatives expressed the desire to work with the NPS to create and maintain the knowledge base needed to manage gathering and removal and to leave park resources unimpaired for future generations. This would include joint research and monitoring, training programs for tribal members and park staff, and ongoing consultation regarding park resources.

Relationship of the Proposed Rule to Existing Regulations

Existing NPS regulations, promulgated in 1983, prohibit ''possessing, destroying, injuring, defacing, removing, digging, or disturbing from its natural state'' living or dead wildlife or fish, plants, paleontological specimens, or mineral resources, or the parts or products of any of these items, except as otherwise provided in NPS regulations. The proposed rule, to be codified at 36 CFR 2.6, would be consistent with this general prohibition. It would provide a recognized exception to current regulations by authorizing resource- and location-specific agreements between the NPS and federally recognized Indian tribes to gather and remove plants or plant parts for traditional purposes.

Gathered plants or plant parts, as envisioned under this proposed rule, are not meant to be used for ''benefits sharing,'' which allows for commercial use of the results of research on material collected in a park area under a specimen collection permit under 36 CFR 2.5. See NPS Management Policies 2006, 4.2.4.

The proposed rule would leave in place 36 CFR 2.1(c)(1), which allows a park Superintendent to authorize gathering of designated fruits, berries, nuts, or unoccupied seashells by all park visitors, subject to certain conditions. The proposed rule would amend section 2.1(d), which currently states that 36 CFR 2.1 ''shall not be construed as authorizing the taking, use or possession of fish, wildlife, or plants for ceremonial or religious purposes, except where specifically authorized by Federal statutory law, treaty rights or in accordance with § 2.2 (wildlife protection) or § 2.3 (fishing).'' The proposed rule would permit the gathering and removal of plants or plant parts for traditional purposes under specific tribal agreements, but would not alter the prohibition on taking fish or wildlife for such purposes.

NPS Units in Alaska

Title 36 CFR 13.35 regulates the gathering and collection of natural products in many of the National Park System units in Alaska, and allows for the limited gathering of a wider range of natural products than are included in the proposed rule. Except for the park areas listed in § 13.35(a), § 13.35(c) permits gathering, by hand and for personal use only, of renewable resources such as natural plant food items (*e.g.* fruits, berries, and mushrooms) that are not threatened or endangered species; driftwood and uninhabited seashells; and plant materials and minerals that are essential to the conduct of traditional ceremonies by Native Americans. Therefore, the proposed rule would have no discernable effect upon National Park System units in Alaska where § 13.35(c) applies. The proposed rule would apply to the park units in Alaska listed in § 13.35(a) and to parks in the contiguous United States. The proposed rule would not address subsistence issues authorized in Alaska by 36 CFR 13.400–13.495.

Section-by-Section Analysis

Sec. 2.1(d) Authorization of Agreements

The proposed rule would remove the existing prohibition on the taking, use, or possession of plants or plant parts, provided such taking, use or possession was done under an agreement described in this rule. The proposed rule would have no effect on existing statutory or treaty rights, or on the taking of wildlife or fish.

Sec. 2.6(a) Definitions

The rule proposes to define the following terms for use in this section: Indian tribe, Traditional association, Traditional purpose, and Tribal official.

Sec. 2.6(b) Agreements Between the NPS and Indian Tribes

The proposed rule would authorize agreements allowing and regulating tribal gathering and removal of plants or plant parts for traditional purposes in park units where such gathering and removal have not been specifically authorized by Congress. The agreements would explicitly recognize the special government-to-government relationship between Indian tribes and the United States, and would be based upon mutually agreed upon terms and conditions subject to the requirements of § 2.6(d). The agreements would serve as the framework under which the NPS would allow tribal gathering and removal and would be implemented by an accompanying permit under § 1.6, which would authorize the gathering and removal activities.

Sec. 2.6(c) Tribal Request

The NPS would respond to a request from the appropriate tribal official expressing interest in entering into an agreement for gathering and removal based on tribal traditional association with the park unit, and on the continuation of tribal cultural traditions on park land. The tribal request would include a description of the traditional association that the Indian tribe has to the park area, a brief explanation of the traditional purposes to which the gathering and removal activities will relate, and a description of the gathering and removal activities that the Indian tribe is interested in conducting.

The NPS believes that under existing law it can protect sensitive or confidential information submitted by tribes (see *e.g.,* 54 U.S.C. 307103).

Sec. 2.6(d) Criteria for Entering Into Agreement

The proposed rule would require the Superintendent to determine that the proposed gathering is a traditional use of the park area by the Indian tribe, analyze any potential impacts of the proposed gathering in accordance with the National Environmental Policy Act and other applicable laws, and document a determination that the proposed gathering and removal will not result in a significant adverse impact (*i.e.,* make a Finding of No Significant Impact (FONSI)), and is consistent with the requirements of other applicable laws and regulations.

Sec. 2.6(e) Denial of Request To Enter Into Agreement

The proposed rule would require the NPS to deny a request to enter into an agreement if sufficient information does not exist to demonstrate the Indian tribe's traditional association or the traditional purposes for which the park resource would be gathered and removed, or if the analyses required by § 2.6(d) indicate significant adverse impacts to park resources or values.

Sec. 2.6(f) Contents of Agreements

The proposed rule outlines the required contents of agreements in detail. According to the terms of the agreement, the NPS would authorize the tribal government to manage gathering and removal by tribal members subject to the conditions of the agreement. The agreement could operate in a variety of ways, but, at a minimum, it would require that the tribal government identify who within the tribe is designated to gather and remove; how such individuals will be identified; what plants or plant parts may be gathered and removed; and limits on size, quantities, seasons, or locations where the gathering and removal may take place.

Agreements would also establish NPS-tribal protocols for monitoring park resources subject to gathering and removal operating protocols, and remedies for noncompliance in addition to those set out in the proposed rule. In the case of noncompliance by members of the tribe, the NPS would initially apply these agreed-upon remedies and, if warranted, seek prosecution of specific violators, prior to terminating the agreement. This section also provides for any special conditions unique to the park unit or tribal tradition that may be included within the scope of existing law.

Sec. 2.6(g) Regional Office Concurrence

The proposed rule would require the Regional Director to approve an agreement entered into under the proposed rule.

Sec. 2.6(h) Closure

The proposed rule would provide for closures and restrictions on gathering and removal when necessary to provide for public health and safety or protect park resources and values, after providing appropriate public notice under § 1.7 (Public notice).

Sec. 2.6(i) Termination or Suspension

The proposed rule would provide for suspension or termination of an agreement where terms or conditions are violated or unanticipated or significant impacts occur. The Superintendent would be required to prepare a written determination justifying the action. A termination would be subject to the concurrence of the Regional Director. Termination of an agreement would be based on factors such as careful analysis of impacts on park resources and the effectiveness of NPS-tribal agreement administration.

Sec. 2.6(j) Prohibitions

Gathering and removal are prohibited, except as authorized under this regulation, or as otherwise authorized by Federal statute, treaty, or another NPS regulation. Any gathering and removal done under this regulation must be done according to the provisions of the applicable agreement and permit.

Relationship of the Proposed Rule to Proposed U.S. Forest Service Regulations

On July 31, 2014, the United States Forest Service (USFS) published a proposed rule in the **Federal Register** (79 FR 44327) to implement section 8105 of the Food, Conservation, and Energy Act of 2008 (Farm Bill). The USFS proposed rule would authorize Regional Foresters or designated Forest Officers to provide trees, portions of trees, or forest products to Indian tribes free of charge for noncommercial traditional and cultural purposes. The rule would require federally-recognized Indian tribes seeking products under the Farm Bill authority to submit a written request to the USFS for free use. The rule encourages tribal officials making the requests to explain their requests to the Regional Forester or designated Forest Officer, and, if necessary, how the requests fit a noncommercial traditional and cultural purpose. The comment period for the USFS rule closed on September 29, 2014.

The NPS recognizes that a federally-recognized tribe may have a traditional association with an NPS unit that is adjacent to USFS lands. This tribe may seek to gather and remove natural products from the NPS and adjacent USFS lands for the same traditional or cultural purpose. In these circumstances, tribal officials would need to enter into an agreement with the NPS and obtain an NPS permit to gather and remove plants or plant parts from the NPS lands; and submit a written request to the USFS to remove trees, portions of trees, or forest products from the adjacent USFS lands.

The NPS and USFS have distinct statutory mandates and authorities that result in separate regulations and policies that govern the resources they

manage. As a result, the process for removing plants and plant parts from NPS lands will be governed by regulations that are separate from the regulations that will govern the removal of trees, portions of trees, or forest products from USFS lands. The NPS seeks comment about how the NPS and the USFS can coordinate their separate processes for requesting approval to remove natural products from the respective lands they administer, in the circumstances described above. In particular, the NPS seeks comment on ways the NPS proposed rule can better align with the USFS proposed rule—for example, how a joint or coordinated permitting process between the two agencies would impact paperwork burden and regulatory compliance.

Compliance With Other Laws, Executive Orders, and Department Policy

Regulatory Planning and Review (Executive Orders 12866 and 13563)

Executive Order 12866 provides that the Office of Information and Regulatory Affairs (OIRA) in the Office of Management and Budget will review all significant rules. OIRA has determined that this rule is not significant.

Executive Order 13563 reaffirms the principles of Executive Order 12866 while calling for improvements in the nation's regulatory system to promote predictability, to reduce uncertainty, and to use the best, most innovative, and least burdensome tools for achieving regulatory ends. The executive order directs agencies to consider regulatory approaches that reduce burdens and maintain flexibility and freedom of choice for the public where these approaches are relevant, feasible, and consistent with regulatory objectives. Executive Order 13563 emphasizes further that regulations must be based on the best available science and that the rulemaking process must allow for public participation and an open exchange of ideas. We have developed this rule in a manner consistent with these requirements.

Regulatory Flexibility Act (RFA)

This rule will not have a significant economic effect on a substantial number of small entities under the RFA (5 U.S.C. 601 *et seq.*). This certification is based on information contained in the report titled, ''Cost-Benefit and Regulatory Flexibility Analyses'' available for review at *http://www.nps.gov/tribes/proposed_rule.htm.*

Small Business Regulatory Enforcement Fairness Act (SBREFA)

This rule is not a major rule under 5 U.S.C. 804(2), the SBREFA. This rule:

(a) Does not have an annual effect on the economy of $100 million or more.

(b) Will not cause a major increase in costs or prices for consumers, individual industries, Federal, State, or local government agencies, or geographic regions.

(c) Does not have significant adverse effects on competition, employment, investment, productivity, innovation, or the ability of U.S.-based enterprises to compete with foreign-based enterprises.

This determination is based on information from ''Cost-Benefit and Regulatory Flexibility Analyses'' available for review at *http://www.nps.gov/tribes/proposed_rule.htm.*

Unfunded Mandates Reform Act (UMRA)

This rule does not impose an unfunded mandate on State, local, or tribal governments or the private sector of more than $100 million per year. The rule does not have a significant or unique effect on State, local or tribal governments or the private sector. It addresses use of NPS lands only. A statement containing the information required by the UMRA (2 U.S.C. 1531 *et seq.*) is not required.

Takings (Executive Order 12630)

This rule does not effect a taking of private property or otherwise have taking implications under Executive Order 12630. A takings implication assessment is not required.

Federalism (Executive Order 13132)

Under the criteria in Executive Order 13132, the rule does not have sufficient Federalism implications to warrant the preparation of a Federalism summary impact statement. This proposed rule only affects use of NPS administered lands. It has no outside effects on other areas. A Federalism summary impact statement is not required.

Civil Justice Reform (Executive Order 12988)

This rule complies with the requirements of Executive Order 12988. Specifically, this rule:

(a) Meets the criteria of section 3(a) requiring that all proposed rules be reviewed to eliminate errors and ambiguity and be written to minimize litigation; and

(b) Meets the criteria of section 3(b)(2) requiring that all proposed rules be written in clear language and contain clear legal standards.

Consultation With Indian Tribes (Executive Order 13175 and Department Policy)

The Department of the Interior strives to strengthen its government-to-government relationship with Indian tribes through a commitment to consultation with Indian tribes and recognition of their right to self-governance and tribal sovereignty. We have evaluated this rule under the Department's consultation policy and under the criteria in Executive Order 13175, and have identified direct tribal implications.

Accordingly, we have consulted with tribes on a government-to-government basis as detailed previously in this preamble.

Paperwork Reduction Act (PRA)

This proposed rule contains a collection of information that we have submitted to the Office of Management and Budget (OMB) for review and approval under the PRA of 1995 (44 U.S.C. 3501 *et seq.*). We may not conduct or sponsor and you are not required to respond to a collection of information unless it displays a currently valid OMB control number.

An Indian tribe that has a traditional association with a park area may request that we enter into an agreement with the tribe for gathering and removal from the park area of plants or plant parts for traditional purposes. The agreement will define the terms under which the Indian tribe may be issued permits that will designate the tribal members who may gather and remove plants or plant parts within the park area in accordance with the terms and conditions of the agreement and the permit. We collect the following information:

Initial Written Request From an Indian Tribal Official

The request must include:

(1) An explanation of the traditional association that the Indian tribe has to the park area;

(2) An explanation of the traditional purposes to which the gathering activities will relate; and

(3) A description of the gathering and removal activities that the Indian tribe is interested in conducting.

Agreement With Indian Tribes

To make determinations based upon these requests or to enter into agreements, we may need to collect information from those Indian tribes who make requests and from the specific tribal members, who are proposed to participate in the authorization, including:

(1) A description of the system to be used to administer gathering and removal, including a clear means of identifying appropriate tribal members who, under the permit, are designated by the Indian tribe to gather and remove and a means for the tribal government to keep the NPS regularly informed of which tribal members are the current gathering and removal designees of the Indian tribe;

(2) A description of the specific plants or plant parts that may be gathered and removed;

(3) Specification of the size and quantity of the plants or plant parts that may be gathered and removed;

(4) Identification of the times and locations at which the plants or plant parts may be gathered and removed;

(5) Identification of the methods that may be used for gathering and removal;

(6) Protocols for monitoring gathering and removal activities;

(7) Operating protocols and additional remedies for noncompliance with the terms of the agreement; and

(8) Key officials.

Title: Gathering of Certain Plants or Plant Parts by Federally Recognized Indian Tribes for Traditional Purposes, 36 CFR 2.

OMB Control Number: 1024–XXXX.

Service Form Number: None.

Type of Request: Request for a new OMB Control Number.

Description of Respondents: Indian tribes.

Respondent's Obligation: Required to obtain or retain a benefit.

Frequency of Collection: On occasion.

Estimated Number of Respondents: 20.

Activity	Estimated number of annual responses	Completion time per response (hours)	Estimated total annual burden hours
Initial written request from an Indian tribal official	20	4	80
Agreement with Indian Tribes	5	20	100
Total	25	.....	180

As part of our continuing effort to reduce paperwork and respondent burdens, we invite the public and other Federal agencies to comment on any aspect of this information collection, including:

(1) Whether or not the collection of information is necessary, including whether or not the information will have practical utility;

(2) The accuracy of our estimate of the burden for this collection of information;

(3) Ways to enhance the quality, utility, and clarity of the information to be collected; and

(4) Ways to minimize the burden of the collection of information on respondents.

Send your comments and suggestions on this information collection by the date indicated in the **DATES** section to the Desk Officer for the Department of the Interior at OMB–OIRA at (202) 395–5806 (fax) or *OIRA_Submission@omb.eop.gov* (email). Please provide a copy of your comments to the Information Collection Clearance Officer, National Park Service, 1849 C Street NW., Washington, DC 20240 (mail); or *madonna_baucum@nps.gov* (email). Please reference ''1024–AD84'' in the subject line of your comments.

National Environmental Policy Act (NEPA)

This rule does not constitute a major Federal action significantly affecting the quality of the human environment. A detailed statement under the NEPA 1969 is not required because the rule is covered by a categorical exclusion. The Department of the Interior Regulations for implementing NEPA at 43 CFR 46.210(i) allow for the following to be categorically excluded: Policies, directives, regulations, and guidelines that are of an administrative, financial, legal, technical, or procedural nature; or whose environmental effects are too broad, speculative, or conjectural to lend themselves to meaningful analysis and will later be subject to the NEPA process, either collectively or case-by-case.''

The NPS has determined that the environmental effects of this rule are too broad, speculative, or conjectural for a meaningful analysis. In order to enter into an agreement for gathering of natural products under the rule, the NPS would first need to receive a request from an appropriate tribal official. While there are a number of Indian tribes that may qualify for an agreement under the rule, the NPS can only speculate at this point as to which Indian tribes will request an agreement, which park units will be affected, and what specific resources specific Indian tribes will request to collect. Because of this, the NPS has explicitly required that each agreement will undergo its own NEPA analysis, on a case-by-case basis. No collection of plants or plant parts would occur under this rule until after a site-specific NEPA analysis is completed.

The NPS has also determined that the rule does not involve any of the extraordinary circumstances listed in 43 CFR 46.215 that would require further analysis under NEPA.

Effects on the Energy Supply (Executive Order 13211)

This rule is not a significant energy action under the definition in Executive Order 13211. A Statement of Energy Effects is not required.

Clarity of This Rule

The NPS is required by Executive Orders 12866 (section 1(b)(12) and 12988 section 3(b)(1)(B)) and by the Presidential Memorandum of June 1, 1998, to write all rules in plain language. This means that each rule we publish must:

(a) Be logically organized;

(b) Use the active voice to address readers directly;

(c) Use clear language rather than jargon;

(d) Be divided into short sections and sentences; and

(e) Use lists and tables wherever possible.

If you feel that we have not met these requirements, send us comments by one of the methods listed in the **ADDRESSES** section. To better help us revise the proposed rule, your comments should be as specific as possible. For example, you should tell us the numbers of the sections or paragraphs that you find unclear, which sections or sentences are too long, the sections where you feel lists or tables would be useful, etc.

Drafting Information

The primary authors of this proposed rule were Patricia L. Parker, Chief, American Indian Liaison Office; Frederick F. York, Regional Anthropologist, Pacific West Region; and Philip Selleck, Associate Regional

Director for Operations, National Capital Region.

Public Participation

All submissions received must include the agency name and docket number or Regulation Identifier Number (RIN), 1024–AD84, for this rulemaking. All comments received will be posted without change to *www.regulations.gov.*

Before including your address, phone number, email address, or other personal identifying information in your comment, you should be aware that your entire comment—including your personal identifying information—may be made publically available at any time. While you can ask us in your comment to withhold your personal identifying information from public review, we cannot guarantee that we will be able to do so.

For access to the docket to read background documents or comments received, go to *www.regulations.gov* and enter 1024–AD84 in the search box.

List of Subjects in Part 2

National parks, Native Americans, Natural resources.

For the reasons given in the preamble, the National Park Service proposes to amend 36 CFR part 2 as follows:

PART 2—RESOURCE PROTECTION, PUBLIC USE AND RECREATION

■ 1. The authority citation for Part 2 continues to read as follows:

Authority: 54 U.S.C. 100101, 100751, 320102.

■ 2. In § 2.1, revise paragraph (d) to read as follows:

§ 2.1 Preservation of natural, cultural and archeological resources.

* * * * *

(d) This section shall not be construed as authorizing the taking, use, or possession of fish, wildlife, or plants, except for the gathering and removal for traditional purposes of plants or plant parts by members of an Indian tribe under an agreement in accordance with § 2.6, or where specifically authorized by Federal statutory law, treaty rights, or in accordance with § 2.2 or § 2.3.

* * * * *

■ 3. Add § 2.6 to read as follows:

§ 2.6 Gathering of plants or plant parts by federally recognized Indian tribes.

(a) *What terms do I need to know?* The following definitions apply only to this section.

Indian tribe means an American Indian or Alaska Native tribe, band, nation, pueblo, village, or community that the Secretary of the Interior acknowledges to exist as an Indian tribe under the Federally Recognized Tribe List Act of 1994, 25 U.S.C. 479a.

Traditional association means a longstanding relationship of historical or cultural significance between an Indian tribe and a park area predating the establishment of the park area.

Traditional purpose means a customary activity or practice that is rooted in the history of an Indian tribe and is important to the continuation of that tribe's distinct culture.

Tribal official means an elected or duly appointed official of the federally recognized government of an Indian tribe authorized to act on behalf of the tribe with respect to the subject matter of this regulation.

(b) *How will the Superintendent authorize gathering and removal?* Upon the request of an Indian tribe that has a traditional association with a park area, the Superintendent may negotiate and enter into an agreement with the tribe to authorize the gathering and removal from the park area of plants or plant parts for traditional purposes. This agreement will define the terms and conditions under which the tribe may be issued permits that designate members who may gather and remove plants or plant parts within the park. The agreement will be implemented through permits, which the Superintendent will issue under § 1.6 of this chapter.

(c) *How can a tribe request to enter into an agreement?* An Indian tribe's request to enter into an agreement under this section must be submitted to the Superintendent by a tribal official and must contain:

(1) An explanation of the Indian tribe's traditional association to the park area;

(2) An explanation of the traditional purposes to which the gathering activities will relate; and

(3) A description of the gathering and removal activities that the tribe is interested in conducting.

(d) *What are the criteria for entering into agreements?* Before entering into an agreement to allow gathering and removal, the Superintendent must do all of the following:

(1) Determine and document, based on information provided by the Indian tribe or others, and other available information, that:

(i) The Indian tribe has a traditional association with the park area; and

(ii) The proposed gathering and removal is a traditional use of the park area by the Indian tribe.

(2) Analyze potential impacts of the proposed gathering and removal in accordance with the requirements of the National Environmental Policy Act, the National Historic Preservation Act, and other applicable laws.

(3) Document a determination that the proposed gathering and removal activities will not result in a significant adverse impact on park resources or values.

(4) Determine that the agreement for the proposed gathering and removal meets the requirements for issuing a permit under § 1.6(a) of this chapter.

(e) *When will the Superintendent deny a request to enter into an agreement?* The Superintendent must deny the request to enter into an agreement to gather if any of the determinations required by paragraph (d) of this section cannot be made.

(f) *How will agreements be implemented?* An agreement to gather and remove plants or plant parts must be implemented through a permit issued in accordance with § 1.6 of this chapter. The agreement must contain the following:

(1) The name of the Indian tribe authorized to gather and remove plants and plant parts;

(2) The basis for the tribe's eligibility under paragraphs (c)(1) and (c)(2) of this section to enter into the agreement;

(3) A description of the system to be used to administer gathering and removal including a clear means of identifying appropriate tribal members who, under the permit, are designated by the Indian tribe to gather and remove;

(4) A means for the tribal government to keep the NPS regularly informed of which tribal members are the current gathering and removal designees of the Indian tribe;

(5) A description of the specific plants or plant parts that may be gathered and removed;

(6) Specification of the size and quantity of the plants or plant parts that may be gathered and removed;

(7) Identification of the times and locations at which the plants or plant parts may be gathered and removed;

(8) Identification of the methods that may be used for gathering and removal;

(9) A statement that commercial use of natural resources is prohibited under § 2.1(c)(3)(v);

(10) Protocols for monitoring gathering and removal activities and thresholds above which NPS and tribal management intervention will occur;

(11) Operating protocols and additional remedies for non-compliance with the terms of the agreement beyond those provided in this section;

(12) Any additional terms or conditions that the parties may agree to; and,

(13) A list of key officials.

(g) *What concurrence must the Superintendent obtain?* The superintendent must obtain the written concurrence of the Regional Director to any agreement before it can go into effect, and before any permit may be issued.

(h) *When will the Superintendent close areas to gathering and removal?* Notwithstanding the terms of any agreement executed under this section, the Superintendent may close park areas, or portions thereof, to gathering and removal for any of the following reasons:

(i) Maintenance of public health and safety;

(ii) Protection of environmental or scenic values;

(iii) Protection of natural or cultural resources;

(iv) Aid to scientific research;

(v) Implementation of management responsibilities;

(vi) Equitable allocation and use of facilities; or

(vii) Avoidance of conflict among visitor use activities.

(2) Closed areas may not be reopened to traditional gathering and removal until the reasons for the closure have been resolved.

(3) Except in emergency situations, the Superintendent will provide public notice of any closure or reopening under this section in accordance with § 1.7 of this chapter.

(i) *When will the agreement and permit be suspended or terminated?*

(1) Notwithstanding any remedy provisions of an agreement, violation of the terms or conditions of an agreement or permit issued under this section may result in suspension or termination of the agreement and permit, and loss of authorization to gather and remove.

(2) A Superintendent may suspend an agreement and implementing permit if terms or conditions are violated or if unanticipated or significant impacts occur. The Superintendent shall prepare a written determination justifying the action.

(3) The Superintendent must have the written concurrence of the Regional Director before terminating an agreement or implementing permit.

(j) *When is gathering prohibited?* Gathering, possession, or removal from a park area of plants or plant parts (including for traditional purposes), is prohibited except where specifically authorized by;

(1) Federal statutory law;

(2) Treaty rights;

(3) Other regulations of this chapter; or

(4) The terms and conditions of an agreement and permit issued under this section.

(k) *Have the information collection requirements been approved?* The Office of Management and Budget has reviewed and approved the information collection requirements in this section and assigned OMB Control No. 1024–XXXX. We will use this information to determine whether a traditional association and purpose can be documented in order to authorize gathering. We may not conduct or sponsor and you are not required to respond to, a collection of information unless it displays a currently valid OMB control number. You may send comments on any aspect of this information collection to the Information Collection Clearance Officer, National Park Service, 1849 C Street NW., Washington, DC 20240.

* * * * *

Dated: April 2, 2105.

Michael Bean,

Principal Deputy Assistant Secretary for Fish and Wildlife and Parks.

[FR Doc. 2015–08852 Filed 4–17–15; 8:45 am]

BILLING CODE 4310–EJ–P

ENVIRONMENTAL PROTECTION AGENCY

40 CFR Part 52

[EPA–R05–OAR–2014–0705; FRL–9926–27–Region 5]

Approval and Promulgation of Air Quality Implementation Plans; Illinois; Illinois Power Holdings and AmerenEnergy Medina Valley Cogen Variance

AGENCY: Environmental Protection Agency.

ACTION: Proposed rule.

SUMMARY: The Environmental Protection Agency (EPA) is proposing to approve into the Illinois Regional Haze State Implementation Plan (SIP) a variance for the electrical generating units (EGUs) included in the Ameren multi-pollutant standard group (Ameren MPS Group). The Ameren MPS Group consists of five facilities owned by Illinois Power Holdings, LLC (IPH) and two facilities owned by AmerenEnergy Medina Valley Cogen, LLC (Medina Valley). The Illinois Environmental Protection Agency (IEPA) submitted the variance to EPA for approval on September 3, 2014.

DATES: Comments must be received on or before May 20, 2015.

ADDRESSES: Submit your comments, identified by Docket ID No. EPA–R05–OAR–2014–0705, by one of the following methods:

1. *www.regulations.gov:* Follow the on-line instructions for submitting comments.

2. *Email: aburano.douglas@epa.gov.*

3. *Fax:* (312) 408–2279.

4. *Mail:* Doug Aburano, Chief, Attainment Planning and Maintenance Section, Air Programs Branch (AR–18J), U.S. Environmental Protection Agency, 77 West Jackson Boulevard, Chicago, Illinois 60604.

5. *Hand Delivery:* Doug Aburano, Chief, Attainment Planning and Maintenance Section, Air Programs Branch (AR–18J), U.S. Environmental Protection Agency, 77 West Jackson Boulevard, Chicago, Illinois 60604. Such deliveries are only accepted during the Regional Office normal hours of operation, and special arrangements should be made for deliveries of boxed information. The Regional Office official hours of business are Monday through Friday, 8:30 a.m. to 4:30 p.m., excluding Federal holidays.

Instructions: Direct your comments to Docket ID No. EPA–R05–OAR–2014–0705. EPA's policy is that all comments received will be included in the public docket without change and may be made available online at *www.regulations.gov,* including any personal information provided, unless the comment includes information claimed to be Confidential Business Information (CBI) or other information whose disclosure is restricted by statute. Do not submit information that you consider to be CBI or otherwise protected through *www.regulations.gov* or email. The *www.regulations.gov* Web site is an ''anonymous access'' system, which means EPA will not know your identity or contact information unless you provide it in the body of your comment. If you send an email comment directly to EPA without going through *www.regulations.gov* your email address will be automatically captured and included as part of the comment that is placed in the public docket and made available on the Internet. If you submit an electronic comment, EPA recommends that you include your name and other contact information in the body of your comment and with any disk or CD–ROM you submit. If EPA cannot read your comment due to technical difficulties and cannot contact you for clarification, EPA may not be able to consider your comment. Electronic files should avoid the use of special characters, any form of encryption, and be free of any defects or viruses. For additional instructions on submitting comments, go to Section I of

the **SUPPLEMENTARY INFORMATION** section of this document.

Docket: All documents in the docket are listed in the *www.regulations.gov* index. Although listed in the index, some information is not publicly available, *e.g.,* CBI or other information whose disclosure is restricted by statute. Certain other material, such as copyrighted material, will be publicly available only in hard copy. Publicly available docket materials are available either electronically in *www.regulations.gov* or in hard copy at the Environmental Protection Agency, Region 5, Air and Radiation Division, 77 West Jackson Boulevard, Chicago, Illinois 60604. This facility is open from 8:30 a.m. to 4:30 p.m., Monday through Friday, excluding Federal holidays. We recommend that you telephone Kathleen D'Agostino, Environmental Engineer, at (312) 886–1767 before visiting the Region 5 office.

FOR FURTHER INFORMATION CONTACT: Kathleen D'Agostino, Environmental Engineer, Attainment Planning and Maintenance Section, Air Programs Branch (AR–18J), Environmental Protection Agency, Region 5, 77 West Jackson Boulevard, Chicago, Illinois 60604, (312) 886–1767, *dagostino.kathleen@epa.gov*.

SUPPLEMENTARY INFORMATION: Throughout this document whenever ''we,'' ''us,'' or ''our'' is used, we mean EPA. This supplementary information section is arranged as follows:

I. What should I consider as I prepare my comments for EPA?
II. What is the background for this action?
III. What is EPA's analysis of the variance for IPH and Medina Valley?
IV. What action is EPA taking?
V. Incorporation by Reference
VI. Statutory and Executive Order Reviews

I. What should I consider as I prepare my comments for EPA?

When submitting comments, remember to:

1. Identify the rulemaking by docket number and other identifying information (subject heading, **Federal Register** date and page number).

2. Follow directions—EPA may ask you to respond to specific questions or organize comments by referencing a Code of Federal Regulations (CFR) part or section number.

3. Explain why you agree or disagree; suggest alternatives and substitute language for your requested changes.

4. Describe any assumptions and provide any technical information and/or data that you used.

5. If you estimate potential costs or burdens, explain how you arrived at your estimate in sufficient detail to allow for it to be reproduced.

6. Provide specific examples to illustrate your concerns, and suggest alternatives.

7. Explain your views as clearly as possible, avoiding the use of profanity or personal threats.

8. Make sure to submit your comments by the comment period deadline identified.

II. What is the background for this action?

Regional haze is visibility impairment that is caused by the cumulative emissions of fine particles ($PM_{2.5}$) (*e.g.,* sulfates, nitrates, organic carbon, elemental carbon and dust) and its precursors (sulfur dioxide (SO_2), nitrogen oxides (NO_X), and in some cases ammonia and volatile organic compounds) from numerous sources over a wide geographic area. Fine particulate precursors react in the atmosphere to form $PM_{2.5}$. Aerosol $PM_{2.5}$ reduces the clarity and distance one can see by scattering and absorbing light.

The visibility protection program under sections 169A, 169B, and 110(a)(2)(J) of the CAA is designed to protect visibility in national parks and wilderness areas (Class I areas). On December 2, 1980, EPA promulgated regulations, known as ''reasonably attributable visibility impairment (RAVI), to address visibility impairment in Class I areas that is reasonably attributable to a single source or small group of sources. On July 1, 1999, EPA promulgated the Regional Haze Rule which revised existing visibility regulations to incorporate provisions addressing regional haze impairment. EPA's Regional Haze Rule, as codified in Title 40 Code of Federal Regulations Part 51.308 (40 CFR 51.308), requires states to submit regional haze SIPs. Among other things, the regional haze SIPs must include provisions requiring certain sources install and operate best available retrofit technology (BART).

At 40 CFR 51.308(e)(2), the regional haze rule allows states to meet BART requirements by mandating alternative measures in lieu of mandating source-specific BART, so long as the alternative measures provide better visibility protection. Given the regional nature of visibility impairment, an alternative that results in lower emissions of SO_2 and NO_X will generally provide better visibility protection. Thus, in the absence of a difference in the spatial distribution of emissions, a modeling analysis is generally not necessary to be able to conclude that an alternative strategy with lower SO_2 and NO_X emissions provides better visibility protection.

On June 24, 2011, Illinois submitted a plan to address the requirements of the Regional Haze Rule, as codified at 40 CFR 51.308. EPA approved Illinois' regional haze SIP on July 6, 2012 (77 FR 39943). In its approval, EPA determined that the emission reductions from sources included in the Illinois plan are significantly greater than even conservative definitions of BART applied to BART subject units (77 FR 39945). EPA also addressed whether the Illinois plan, achieving greater emission reductions overall than the application of BART on BART-subject units, can also be expected to achieve greater visibility protection than application of BART on BART-subject units. Given that, in general, the Illinois power plants are substantial distances from any Class I area, and given that the averaging in Illinois' plan is only authorized within the somewhat limited region within which each utility's plants are located, EPA determined that a reallocation of emission reductions from one plant to another is unlikely to change the visibility impact of those emission reductions significantly. Consequently, EPA concluded that the significantly greater emission reductions that Illinois required in its regional haze SIP will yield greater progress toward visibility protection as compared to the benefits of a conservative estimate of BART.

One of the rules approved in that action to meet BART requirements is 35 Illinois Administrative Code (Ill. Adm. Code) rule 225.233 Multi-Pollutant Standard (MPS), specifically subsections (a), (b), (e), and (g). Section 225.233(e)(3)(C) contains the sulfur dioxide (SO_2) emission standards applicable to the Ameren MPS Group. Section 225.233(e)(3)(C)(i) establishes an overall SO_2 annual emission rate for EGUs in the Ameren MPS group of 0.50 pounds per million Btu (lb/mmBtu) for calendar years 2010 through 2013. Section 225.233(e)(3)(C)(ii) establishes an overall SO_2 annual emission rate for EGUs in the Ameren MPS group of 0.43 lb/mmBtu for calendar year 2014. Section 225.233(e)(3)(C)(iii) establishes an overall SO_2 annual emission rate for EGUs in the Ameren MPS group of 0.25 lb/mmBtu for calendar years 2015 and 2016. Section 225.233(e)(3)(C)(iv) establishes an overall SO_2 annual emission rate for EGUs in the Ameren MPS group of 0.23 lb/mmBtu beginning in calendar year 2017 and continuing each calendar year thereafter.

On November 21, 2013, the Illinois Pollution Control Board (IPCB) granted IPH and Medina Valley a variance from

the applicable requirements of Section 225.233(e)(3)(C)(iii) for a period beginning January 1, 2015, through December 31, 2019, and Section 225.233(e)(3)(C)(iv) for a period beginning January 1, 2017, through December 31, 2019, subject to certain conditions. IEPA submitted the variance as a revisions to the Illinois Regional Haze SIP on September 3, 2014. The IPH facilities included in the Ameren MPS group and subject to the variance include: Coffeen Energy Center (Montgomery County), Duck Creek Energy Center (Fulton County), E.D. Edwards Energy Center (Peoria County), Joppa Energy Center (Massac County), and Newton Energy Center (Jasper County). The two Medina Valley facilities included in the Ameren MPS group and subject to the variance are the Meredosia Energy Center (Morgan County) and the Hutsonville Energy Center (Crawford County).

III. What is EPA's analysis of the variance for IPH and Medina Valley?

As stated above, the IPCB granted IPH and Medina Valley a variance from the requirement of Section 225.233(e)(3)(C)(iii) to comply with an overall SO_2 annual emission rate of 0.25 lb/mmBtu in 2015 and 2016 for the time period from January 1, 2015, through December 31, 2019, and from the requirement of Section 225.233(e)(3)(C)(iv) to comply with an overall SO_2 annual emission rate of 0.23 lb/mmBtu for the time period from January 1, 2017 through December 31, 2019. This variance was granted subject to numerous conditions including, but not limited to, the following:

1. The IPH facilities in the Ameren MPS group must comply with an overall SO_2 annual emission rate of 0.35 lb/million Btu from January 1, 2015, through December 31, 2019, and an overall SO_2 annual emission rate of 0.23 lb/mmBtu beginning on January 1, 2020.
2. Medina Valley must not operate the EGUs at Meredosia and Hutsonville Power stations until after December 31, 2020, except that the FutureGen project at the Meredosia Energy Center is exempt from this restriction.
3. Through December 31, 2019, IPH must continue to burn low sulfur coal at the E.D. Edwards, Joppa, and Newton Energy Centers. The combined annual average stack SO_2 emissions of these three stations must not exceed 0.55 lb/mmBtu on a calendar year annual average basis.
4. Through December 31, 2019, IPH must operate the existing Flue Gas Desulfurization systems at the Duck Creek and Coffeen Energy Centers to achieve a combined SO_2 removal rate of at least 98 percent on a calendar year annual average basis.
5. IPH must permanently retire E.D. Edwards Unit 1 as soon as allowed by the Midcontinent Independent Transmission System Operator, Inc. (now called the Midcontinent Independent System Operator).
6. From the time period beginning October 1, 2013, through December 31, 2020, IPH must limit the MPS Group system-wide mass emissions of SO_2 to no more than 327,996 tons.
7. For the time period beginning October 1, 2013, through December 31, 2020, IPH must report annually to IEPA the combined tons of mass SO_2 emissions and the overall SO_2 annual emissions rate from its five Ameren MPS group facilities. The report must show the mass SO_2 emissions for each time period (October 1, 2013 through December 31, 2013, and each year thereafter) along with a running total of the remaining emissions available under the system-wide mass SO_2 emissions limit.
8. The variance also includes a condition with a schedule for completing the flue gas desulfurization project at the Newton Power Station, with major equipment components in position by September 1, 2019, and requirements for IPH to file annual progress reports with IEPA from 2013 through 2019.

In evaluating the variance submitted by Illinois, EPA assessed the effect the variance would have on the emissions reductions expected under the MPS as currently approved into the Regional Haze SIP. Under the conditions of the currently approved Regional Haze SIP, the Ameren MPS group would be expected to emit 335,774 tons of SO_2 for the 2013–2020 time period. Under the variance, the Ameren MPS group is limited to 327,996 tons of SO_2 over that same time period; 7,778 tons less than would be expected under the current SIP.

In addition, EPA evaluated the variance to ensure that the alternative measures contained in the variance continue to provide better visibility protection than the application of BART on BART-subject units. Because the deadline for implementation of BART level controls in Illinois is 2017 (within 5 years of approval of Illinois' SIP), EPA compared the 2017 emissions under the variance to the application of typical Best Available Control Technology (BACT) control levels to the BART subject units in the Ameren MPS group. BACT limits are imposed on new units or units undergoing major modifications. Therefore, BART limits, which by definition apply to relatively old existing units, are unlikely to be lower than the limits that would apply to a new unit and would in many cases be significantly higher.

TABLE 1—COMPARISON OF EMISSIONS REDUCTIONS AT AMEREN MPS GROUP UNITS UNDER THE VARIANCE VERSUS EMISSIONS REDUCTIONS FROM APPLICATION OF BACT LIMITS TO BART SUBJECT UNITS

Facility	Unit	MMMBtu	Base year		BACT (0.06#/MMBtu)		Variance (2017)		
			#/MMBtu	Emissions (tons)	Emissions (tons)	Reduction (tons)	#/MMBtu	Emissions (tons)	Reduction (tons)
Cofeen	1	18,570	1.54	14,332	557	13,775	0.35	3,250	11,082
Cofeen	2	37,545	1.49	27999	1,126	26,873	0.35	6,570	21,429
Duck Creek	1	22,635	0.97	11026	679	10,347	0.35	3,961	7,065
E D Edwards	1	6,417	3.55	11399	.....	.....	0.35	1,123	10,276
E D Edwards	2	17,222	1.70	14666	517	14,149	0.35	3,014	11,652
E D Edwards	3	15,972	1.21	9683	479	9,204	0.35	2,795	6,888
Hutsonville	5	3,161	4.53	7163	.....	0	0	.....	7,163
Hutsonville	6	3,443	4.53	7791	.....	0	0	.....	7,791
Joppa	1	13,548	0.51	3441	.....	0	0.35	2,371	1,070
Joppa	2	16,258	0.51	4139	.....	0	0.35	2,845	1,294
Joppa	3	15,396	0.51	3947	.....	0	0.35	2,694	1,253
Joppa	4	13,402	0.52	3448	.....	0	0.35	2,345	1,143
Joppa	5	15,094	0.52	3932	.....	0	0.35	2,641	1,291
Joppa	6	16,063	0.52	4182	.....	0	0.35	2,811	1,371
Meredosia	1	1,134	5.02	2844	.....	0	0	.....	2,844
Meredosia	2	1,337	5.02	3356	.....	0	0	.....	3,356
Meredosia	3	1,069	5.04	2694	.....	0	0	.....	2,694
Meredosia	4	1,406	5.00	3518	.....	0	0	.....	3,518

TABLE 1—COMPARISON OF EMISSIONS REDUCTIONS AT AMEREN MPS GROUP UNITS UNDER THE VARIANCE VERSUS EMISSIONS REDUCTIONS FROM APPLICATION OF BACT LIMITS TO BART SUBJECT UNITS—Continued

Facility	Unit	MMMBtu	Base year		BACT (0.06#/MMBtu)		Variance (2017)		
			#/MMBtu	Emissions (tons)	Emissions (tons)	Reduction (tons)	#/MMBtu	Emissions (tons)	Reduction (tons)
Meredosia	5	10,810	2.34	12639	.....	0	0	.....	12,639
Newton	1	40,631	0.45	9046	.....	0	0.35	7,110	1,936
Newton	2	38,533	0.46	8823	.....	0	0.35	6,743	2,080
Totals	.....	309,646	.....	170,108	.....	74,348	.....	50,275	119,833

Table 1 shows SO_2 emissions reductions of 74,348 tons in 2017 if typical BACT limits were applied to BART subject sources in the Ameren MPS group. With the variance, Table 1 shows SO_2 emissions reductions of 119,833 tons in 2017. More reductions are required in 2017 under the variance than would be required by the application of typical BACT limits to BART subject sources. Even assuming that the 22,360 MMBtu generated at the Hudsonville and Meredosia units would be shifted to other units in the group, applying the 0.35 pound/MBtu group average results in an additional 3,913 tons of emissions under the variance in 2017, or a total of 54,188 tons of SO_2. This would result in 2017 SO_2 emissions reductions under the variance of 115,920 tons, which remains 41,572 tons greater than emissions reductions under the application of BACT at BART subject sources. In addition, for the reasons set forth in EPA's approval of the Illinois regional haze sip (77 FR 39946) and summarized above, EPA continues to conclude that the significantly greater emission reductions required under the variance will yield greater progress toward visibility protection as compared to the benefits of a conservative estimate of BART. Therefore, EPA concludes that the revised limits under the variance continue to satisfy BART requirements for the Ameren MPS Group sources.

In evaluating the approvability of the variance, EPA must also consider whether the SIP revision meets the requirements of section 110(l) of the CAA, 42 U.S.C. 7410(l). To be approved, a SIP revision must not interfere with any applicable requirement concerning attainment, reasonable further progress, or any other applicable requirement of the CAA. Currently, the SIP establishes overall annual SO_2 emissions rates for the Ameren MPS Group, beginning in 2010. The SIP allows flexibility in achieving these overall emissions rates, not requiring reductions at any particular source. It should be noted that none of the Ameren MPS Group sources are located in a $PM_{2.5}$ nonattainment area and the only source located in an SO_2 nonattainment area is the E.D. Edwards facility in Peoria County. The variance adds specific conditions applicable to this facility, including the requirement that the E.D. Edwards, Joppa, and Newton Energy Centers continue to burn low sulfur coal through December 31, 2019, and that E.D. Edwards permanently retire Unit 1 as soon as allowed by the Midcontinent Independent Transmission System Operator, Inc. The variance will not result in any increase in SO_2 emissions, but rather will result in fewer SO_2 emissions over the 2013–2020 time period. In addition, the measures contained in the variance provide better visibility protection than the application of BART on BART-subject units. Therefore, the variance will not interfere with attainment, reasonable further progress, or any other applicable requirement of the CAA.

IV. What action is EPA taking?

EPA is proposing to approve the IPH and Medina Valley variance, submitted by IEPA on September 3, 2014, as a revision to the Illinois Regional Haze SIP.

V. Incorporation by Reference

In this rule, EPA is proposing to include in a final EPA rule regulatory text that includes incorporation by reference. In accordance with requirements of 1 CFR 51.5, the EPA is proposing to incorporate by reference Illinois Pollution Control Board Order PCB 14–10, effective November, 21, 2013. The EPA has made, and will continue to make, these documents generally available electronically through *www.regulations.gov* and/or in hard copy at the appropriate EPA office (see the **ADDRESSES** section of this preamble for more information).

VI. Statutory and Executive Order Reviews

Under the CAA, the Administrator is required to approve a SIP submission that complies with the provisions of the CAA and applicable Federal regulations. 42 U.S.C. 7410(k); 40 CFR 52.02(a). Thus, in reviewing SIP submissions, EPA's role is to approve state choices, provided that they meet the criteria of the CAA. Accordingly, this action merely approves state law as meeting Federal requirements and does not impose additional requirements beyond those imposed by state law. For that reason, this action:

- Is not a ''significant regulatory action'' subject to review by the Office of Management and Budget under Executive Order 12866 (58 FR 51735, October 4, 1993);
- Does not impose an information collection burden under the provisions of the Paperwork Reduction Act (44 U.S.C. 3501 *et seq.*);
- Is certified as not having a significant economic impact on a substantial number of small entities under the Regulatory Flexibility Act (5 U.S.C. 601 *et seq.*);
- Does not contain any unfunded mandate or significantly or uniquely affect small governments, as described in the Unfunded Mandates Reform Act of 1995 (Pub. L. 104–4);
- Does not have Federalism implications as specified in Executive Order 13132 (64 FR 43255, August 10, 1999);
- Is not an economically significant regulatory action based on health or safety risks subject to Executive Order 13045 (62 FR 19885, April 23, 1997);
- Is not a significant regulatory action subject to Executive Order 13211 (66 FR 28355, May 22, 2001);
- Is not subject to requirements of Section 12(d) of the National Technology Transfer and Advancement Act of 1995 (15 U.S.C. 272 note) because application of those requirements would be inconsistent with the CAA; and
- Does not provide EPA with the discretionary authority to address, as

appropriate, disproportionate human health or environmental effects, using practicable and legally permissible methods, under Executive Order 12898 (59 FR 7629, February 16, 1994).

This rule is not approved to apply on any Indian reservation land or in any other area where EPA or an Indian tribe has demonstrated that a tribe has jurisdiction. In those areas of Indian country, the rule does not have tribal implications as specified by Executive Order 13175 (65 FR 67249, November 9, 2000), nor will it impose substantial direct costs on tribal governments or preempt tribal law.

List of Subjects in 40 CFR Part 52

Environmental protection, Air pollution control, Incorporation by reference, Intergovernmental relations, Particulate matter, Reporting and recordkeeping requirements, Sulfur oxides.

Dated: April 2, 2015.

Susan Hedman,

Regional Administrator, Region 5.

[FR Doc. 2015–08896 Filed 4–17–15; 8:45 am]

BILLING CODE 6560–50–P

ENVIRONMENTAL PROTECTION AGENCY

40 CFR Part 52

[EPA–R05–OAR–2014–0704; FRL–9926–33–Region 5]

Approval and Promulgation of Air Quality Implementation Plans; Wisconsin; Infrastructure SIP Requirements for the 2008 Ozone, 2010 NO_2, and 2010 SO_2 NAAQS

AGENCY: Environmental Protection Agency.

ACTION: Proposed rule.

SUMMARY: The Environmental Protection Agency (EPA) is proposing to approve some elements of state implementation plan (SIP) submissions from Wisconsin regarding the infrastructure requirements of section 110 of the Clean Air Act (CAA) for the 2008 ozone, 2010 nitrogen dioxide (NO_2), and 2010 sulfur dioxide (SO_2) National Ambient Air Quality Standards (NAAQS). The infrastructure requirements are designed to ensure that the structural components of each state's air quality management program are adequate to meet the state's responsibilities under the CAA.

DATES: Comments must be received on or before May 20, 2015.

ADDRESSES: Submit your comments, identified by Docket ID No. EPA–R05–OAR–2014–0704, by one of the following methods:

1. *www.regulations.gov:* Follow the on-line instructions for submitting comments.
2. *Email: aburano.douglas@epa.gov.*
3. *Fax:* (312) 408–2279.
4. *Mail:* Douglas Aburano, Chief, Attainment Planning and Maintenance Section, Air Programs Branch (AR–18J), U.S. Environmental Protection Agency, 77 West Jackson Boulevard, Chicago, Illinois 60604.
5. *Hand Delivery:* Douglas Aburano, Chief, Attainment Planning and Maintenance Section, Air Programs Branch (AR–18J), U.S. Environmental Protection Agency, 77 West Jackson Boulevard, Chicago, Illinois 60604. Such deliveries are only accepted during the Regional Office normal hours of operation, and special arrangements should be made for deliveries of boxed information. The Regional Office official hours of business are Monday through Friday, 8:30 a.m. to 4:30 p.m., excluding Federal holidays.

Instructions: Direct your comments to Docket ID No. EPA–R05–OAR–2014–0704. EPA's policy is that all comments received will be included in the public docket without change and may be made available online at *www.regulations.gov,* including any personal information provided, unless the comment includes information claimed to be Confidential Business Information (CBI) or other information whose disclosure is restricted by statute. Do not submit information that you consider to be CBI or otherwise protected through *www.regulations.gov* or email. The *www.regulations.gov* Web site is an ''anonymous access'' system, which means EPA will not know your identity or contact information unless you provide it in the body of your comment. If you send an email comment directly to EPA without going through *www.regulations.gov* your email address will be automatically captured and included as part of the comment that is placed in the public docket and made available on the Internet. If you submit an electronic comment, EPA recommends that you include your name and other contact information in the body of your comment and with any disk or CD–ROM you submit. If EPA cannot read your comment due to technical difficulties and cannot contact you for clarification, EPA may not be able to consider your comment. Electronic files should avoid the use of special characters, any form of encryption, and be free of any defects or viruses. For additional instructions on submitting comments, go to Section I of the **SUPPLEMENTARY INFORMATION** section of this document.

Docket: All documents in the docket are listed in the *www.regulations.gov* index. Although listed in the index, some information is not publicly available, *e.g.,* CBI or other information whose disclosure is restricted by statute. Certain other material, such as copyrighted material, will be publicly available only in hard copy. Publicly available docket materials are available either electronically in *www.regulations.gov* or in hard copy at the Environmental Protection Agency, Region 5, Air and Radiation Division, 77 West Jackson Boulevard, Chicago, Illinois 60604. This facility is open from 8:30 a.m. to 4:30 p.m., Monday through Friday, excluding Federal holidays. We recommend that you telephone Eric Svingen, Environmental Engineer, at (312) 353–4489 before visiting the Region 5 office.

FOR FURTHER INFORMATION CONTACT: Eric Svingen, Environmental Engineer, Attainment Planning and Maintenance Section, Air Programs Branch (AR–18J), Environmental Protection Agency, Region 5, 77 West Jackson Boulevard, Chicago, Illinois 60604, (312) 353–4489, *svingen.eric@epa.gov.*

SUPPLEMENTARY INFORMATION: Throughout this document whenever ''we,'' ''us,'' or ''our'' is used, we mean EPA. This supplementary information section is arranged as follows:

I. What should I consider as I prepare my comments for EPA?
II. What is the background of these SIP submissions?
III. What guidance is EPA using to evaluate these SIP submissions?
IV. What is the result of EPA's review of these SIP submissions?
V. What action is EPA taking?
VI. Statutory and Executive Order Reviews

I. What should I consider as I prepare my comments for EPA?

When submitting comments, remember to:

1. Identify the rulemaking by docket number and other identifying information (subject heading, **Federal Register** date and page number).
2. Follow directions—EPA may ask you to respond to specific questions or organize comments by referencing a Code of Federal Regulations (CFR) part or section number.
3. Explain why you agree or disagree; suggest alternatives and substitute language for your requested changes.
4. Describe any assumptions and provide any technical information and/or data that you used.
5. If you estimate potential costs or burdens, explain how you arrived at your estimate in sufficient detail to allow for it to be reproduced.

6. Provide specific examples to illustrate your concerns, and suggest alternatives.

7. Explain your views as clearly as possible, avoiding the use of profanity or personal threats.

8. Make sure to submit your comments by the comment period deadline identified.

II. What is the background of these SIP submissions?

A. What state submissions does this rulemaking address?

This rulemaking addresses June 20, 2013, submissions and a January 28, 2015, clarification from the Wisconsin Department of Natural Resources (WDNR) intended to address all applicable infrastructure requirements for the 2008 ozone, 2010 NO_2, and 2010 SO_2 NAAQS.

B. Why did the state make these SIP submissions?

Under section 110(a)(1) and (2) of the CAA, states are required to submit infrastructure SIPs to ensure that their SIPs provide for implementation, maintenance, and enforcement of the NAAQS, including the 2008 ozone, 2010 NO_2, and 2010 SO_2 NAAQS. These submissions must contain any revisions needed for meeting the applicable SIP requirements of section 110(a)(2), or certifications that their existing SIPs for the NAAQS already meet those requirements.

EPA highlighted this statutory requirement in an October 2, 2007, guidance document entitled ''Guidance on SIP Elements Required Under Sections 110(a)(1) and (2) for the 1997 8-hour Ozone and $PM_{2.5}$[1] National Ambient Air Quality Standards'' (2007 Guidance) and has issued additional guidance documents, the most recent on September 13, 2013, entitled ''Guidance on Infrastructure State Implementation Plan (SIP) Elements under CAA Sections 110(a)(1) and (2)'' (2013 Guidance). The SIP submissions referenced in this rulemaking pertain to the applicable requirements of section 110(a)(1) and (2), and address the 2008 ozone, 2010 NO_2, and 2010 SO_2 NAAQS.

C. What is the scope of this rulemaking?

EPA is acting upon the SIP submissions from Wisconsin that address the infrastructure requirements of CAA section 110(a)(1) and (2) for the 2008 ozone, 2010 NO_2, and 2010 SO_2 NAAQS. The requirement for states to make SIP submissions of this type arises out of CAA section 110(a)(1), which states that states must make SIP submissions ''within 3 years (or such shorter period as the Administrator may prescribe) after the promulgation of a national primary ambient air quality standard (or any revision thereof),'' and these SIP submissions are to provide for the ''implementation, maintenance, and enforcement'' of such NAAQS. The statute directly imposes on states the duty to make these SIP submissions, and the requirement to make the submissions is not conditioned upon EPA's taking any action other than promulgating a new or revised NAAQS. Section 110(a)(2) includes a list of specific elements that ''[e]ach such plan'' submission must address.

EPA has historically referred to these SIP submissions made for the purpose of satisfying the requirements of CAA section 110(a)(1) and (2) as ''infrastructure SIP'' submissions. Although the term ''infrastructure SIP'' does not appear in the CAA, EPA uses the term to distinguish this particular type of SIP submission from submissions that are intended to satisfy other SIP requirements under the CAA, such as SIP submissions that address the nonattainment planning requirements of part D and the Prevention of Significant Deterioration (PSD) requirements of part C of title I of the CAA, and ''regional haze SIP'' submissions required to address the visibility protection requirements of CAA section 169A.

This rulemaking will not cover three substantive areas that are not integral to acting on a state's infrastructure SIP submissions: (i) Existing provisions related to excess emissions during periods of start-up, shutdown, or malfunction (''SSM'') at sources, that may be contrary to the CAA and EPA's policies addressing such excess emissions; (ii) existing provisions related to ''director's variance'' or ''director's discretion'' that purport to permit revisions to SIP approved emissions limits with limited public notice or without requiring further approval by EPA, that may be contrary to the CAA; and, (iii) existing provisions for PSD programs that may be inconsistent with current requirements of EPA's ''Final NSR Improvement Rule,'' 67 FR 80186 (December 31, 2002), as amended by 72 FR 32526 (June 13, 2007) (''NSR Reform''). Instead, EPA has the authority to address each one of these substantive areas in separate rulemakings. A detailed history, interpretation, and rationale as they relate to infrastructure SIP requirements can be found in EPA's May 13, 2014, proposed rule entitled, ''Infrastructure SIP Requirements for the 2008 Lead NAAQS'' in the section, ''What is the scope of this rulemaking?'' (*see* 79 FR 27241 at 27242–27245).

III. What guidance is EPA using to evaluate these SIP submissions?

EPA's guidance for these infrastructure SIP submissions is embodied in the 2007 Guidance referenced above. Specifically, attachment A of the 2007 Guidance (Required Section 110 SIP Elements) identifies the statutory elements that states need to submit in order to satisfy the requirements for an infrastructure SIP submission. As discussed above, EPA issued additional guidance, the most recent being the 2013 Guidance that further clarifies aspects of infrastructure SIPs that are not NAAQS specific.

IV. What is the result of EPA's review of these SIP submissions?

Pursuant to section 110(a), states must provide reasonable notice and opportunity for public hearing for all infrastructure SIP submissions. WDNR provided notice of a public comment period on May 1, 2013, held a public hearing at WDNR State Headquarters on June 10, 2013, and closed the public comment period on June 14, 2013. Two comments were received, expressing support for improved environmental protection and air quality.

Wisconsin provided a detailed synopsis of how various components of its SIP meet each of the applicable requirements in section 110(a)(2) for the 2008 ozone, 2010 NO_2, and 2010 SO_2 NAAQS, as applicable. The following review evaluates the state's submissions.

A. Section 110(a)(2)(A)—Emission Limits and Other Control Measures

This section requires SIPs to include enforceable emission limits and other control measures, means or techniques, schedules for compliance, and other related matters. However, EPA has long interpreted emission limits and control measures for attaining the standards as being due when nonattainment planning requirements are due.[2] In the context of an infrastructure SIP, EPA is not evaluating the existing SIP provisions for this purpose. Instead, EPA is only evaluating whether the state's SIP has basic structural provisions for the implementation of the NAAQS.

[1] $PM_{2.5}$ refers to particles with an aerodynamic diameter of less than or equal to 2.5 micrometers, oftentimes referred to as ''fine'' particles.

[2] See, *e.g.,* EPA's final rule on ''National Ambient Air Quality Standards for Lead.'' 73 FR 66964 at 67034.

Under Wisconsin Statutes (*Wis. Stats.*) 227 and 285, WDNR holds the authority to create new rules and implement existing emission limits and controls. Authority to monitor, update, and implement revisions to Wisconsin's SIP, including revisions to emission limits and control measures as necessary to meet NAAQS, is contained in *Wis. Stats.* 285.11–285.19. Authority related to specific pollutants, including the establishment of ambient air quality standards and increments, identification of nonattainment areas, air resource allocations, and performance and emissions standards, is contained in *Wis. Stats.* 285.21–285.29.

Specifically, authority for WNDR to create new rules and regulations is found in *Wis. Stats.* 227.11, 285.11, and 285.21. *Wis. Stats.* 227.11(2)(a) expressly confers rule making authority to an agency. *Wis. Stats.* 285.11(1) and (6) require that WDNR promulgate rules and establish control strategies in order to prepare and implement the SIP for the prevention, abatement, and control of air pollution in Wisconsin.

The 2013 Guidance states that to satisfy section 110(a)(2)(A) requirements, ''an air agency's submission should identify existing EPA-approved SIP provisions or new SIP provisions that the air agency has adopted and submitted for EPA approval that limit emissions of pollutants relevant to the subject NAAQS, including precursors of the relevant NAAQS pollutant where applicable.'' In its January 28, 2015, clarification letter, WDNR identified existing controls and emission limits in the Wisconsin Administrative Code that can be applied to the 2008 ozone, 2010 NO_2, and 2010 SO_2 NAAQS. These regulations include controls and emission limits for volatile organic compounds (VOC) and nitrogen oxides (NO_X), which are precursors to ozone. VOC as an ozone precursor is controlled by Wisconsin Administrative Code Chapters Natural Resources (NR) 419–425, and NO_X as an ozone precursor is controlled by NR 428; these regulations can be applied to the 2008 ozone NAAQS. NR 428 contains existing controls and emission limits for NO_X; these regulations can be applied to the 2010 NO_2 NAAQS. NR 418 contains existing controls and emission limits for SO_2; these regulations can be applied to the 2010 SO_2 NAAQS.

In this rulemaking, EPA is not proposing to approve any new provisions in NR 419–425, NR 428, or NR 418 that have not been previously approved by EPA. EPA is also not proposing to approve or disapprove any existing state provisions or rules related to start-up, shutdown or malfunction or director's discretion in the context of section 110(a)(2)(A). EPA proposes that Wisconsin has met the infrastructure SIP requirements of section 110(a)(2)(A) with respect to the 2008 ozone, 2010 NO_2, and 2010 SO_2 NAAQS.

B. Section 110(a)(2)(B)—Ambient Air Quality Monitoring/Data System

This section requires SIPs to include provisions to provide for establishing and operating ambient air quality monitors, collecting and analyzing ambient air quality data, and making these data available to EPA upon request. This review of the annual monitoring plan includes EPA's determination that the state: (i) Monitors air quality at appropriate locations throughout the state using EPA-approved Federal Reference Methods or Federal Equivalent Method monitors; (ii) submits data to EPA's Air Quality System (AQS) in a timely manner; and, (iii) provides EPA Regional Offices with prior notification of any planned changes to monitoring sites or the network plan.

WDNR continues to operate an extensive air monitoring network, which is used to determine compliance with the NAAQS. Furthermore, WDNR submits yearly monitoring network plans to EPA, and EPA approved WDNR's Annual Air Monitoring Network Plan for ozone, NO_2, and SO_2 on October 31, 2014. Monitoring data from WDNR are entered into EPA's AQS in a timely manner, and the state provides EPA with prior notification when changes to its monitoring network or plan are being considered. EPA proposes that Wisconsin has met the infrastructure SIP requirements of section 110(a)(2)(B) with respect to the 2008 ozone, 2010 NO_2, and 2010 SO_2 NAAQS.

C. Section 110(a)(2)(C)—Program for Enforcement of Control Measures; PSD

This section requires each state to provide a program for enforcement of control measures. Section 110(a)(2)(C) also includes various requirements relating to PSD.

1. Program for Enforcement of Control Measures

States are required to include a program providing for enforcement of all SIP measures and the regulation of construction of new or modified stationary sources to meet new source review (NSR) requirements under PSD and nonattainment new source review (NNSR) programs. Part C of the CAA (sections 160–169B) addresses PSD, while part D of the CAA (sections 171–193) addresses NNSR requirements.

WDNR maintains an enforcement program to ensure compliance with SIP requirements. The Bureau of Air Management houses an active statewide compliance and enforcement team that works in all geographic regions of the state. WDNR refers actions as necessary to the Wisconsin Department of Justice with the involvement of WDNR. Under *Wis. Stats.* 285.13, WDNR has the authority to impose fees and penalties to ensure that required measures are ultimately implemented. *Wis. Stats.* 285.83 and *Wis. Stats.* 285.87 provide WDNR with the authority to enforce violations and assess penalties. EPA proposes that Wisconsin has met the enforcement of SIP measures requirements of section 110(a)(2)(C) with respect to the 2008 ozone, 2010 NO_2, and 2010 SO_2 NAAQS.

2. PSD

110(a)(2)(C) includes various PSD requirements: Identification of NO_X as a precursor to ozone provisions in the PSD program, identification of precursors to $PM_{2.5}$ and the identification of $PM_{2.5}$ and PM_{10} [3] condensables in the PSD program, $PM_{2.5}$ increments in the PSD program, and greenhouse gas (GHG) permitting and the ''Tailoring Rule.'' [4] In this rulemaking, we are not taking action on the state's satisfaction of the various PSD permitting requirements. Instead, EPA will evaluate Wisconsin's compliance with each of these requirements in a separate rulemaking.

D. Section 110(a)(2)(D)—Interstate Transport; Pollution Abatement

Section 110(a)(2)(D)(i)(I) requires SIPs to include provisions prohibiting any source or other type of emissions activity in one state from contributing significantly to nonattainment, or interfering with maintenance, of the NAAQS in another state. Section 110(a)(2)(D)(i)(II) requires SIPs to

[3] PM_{10} refers to particles with an aerodynamic diameter of less than or equal to 10 micrometers.

[4] In EPA's April 28, 2011, proposed rulemaking for infrastructure SIPs for the 1997 ozone and $PM_{2.5}$ NAAQS, we stated that each state's PSD program must meet applicable requirements for evaluation of all regulated NSR pollutants in PSD permits (*see* 76 FR 23757 at 23760). This view was reiterated in EPA's August 2, 2012, proposed rulemaking for infrastructure SIPs for the 2006 $PM_{2.5}$ NAAQS (*see* 77 FR 45992 at 45998). In other words, if a state lacks provisions needed to adequately address NO_X as a precursor to ozone, $PM_{2.5}$ precursors, $PM_{2.5}$ and PM_{10} condensables, $PM_{2.5}$ increments, or the Federal GHG permitting thresholds, the provisions of section 110(a)(2)(C) requiring a suitable PSD permitting program must be considered not to have been met irrespective of the NAAQS that triggered the requirement to submit an infrastructure SIP.

include provisions prohibiting any source or other type of emissions activity in one state from interfering with measures required to prevent significant deterioration of air quality or to protect visibility in another state.

1. Interstate Transport—Significant Contribution

On February 17, 2012, EPA promulgated designations for the 2010 NO_2 NAAQS, stating for the entire country that, ''The EPA is designating areas as ''unclassifiable/attainment'' to mean that available information does not indicate that the air quality in these areas exceeds the 2010 NO_2 NAAQS'' (*see* 77 FR 9532). For comparison purposes, EPA examined the design values [5] based on data collected between 2011 and 2013 from NO_2 monitors in Wisconsin and surrounding states. Within Wisconsin, the highest design value was 49 ppb at a monitor in Milwaukee. In surrounding states, the highest design value was 64 ppb at a monitor in Chicago, IL. These design values are both lower than the standard, which is 100 ppb for the 2010 NO_2 NAAQS. Additionally, as discussed in EPA's evaluation of 110(a)(2)(A) requirements, NR 428 contains controls and emission limits for NO_X. Furthermore, NR 432 allows Wisconsin to implement the state portions of the Clean Air Interstate Rule (CAIR), which addresses emissions of NO_X as well as SO_2. On January 1, 2015, CAIR was replaced by the Cross-State Air Pollution Rule (CSAPR), which requires reductions of NO_X and SO_2 emissions in order to reduce interstate transport. WDNR works with EPA in implementing this program. EPA believes that, in conjunction with the continued implementation of the state's ability to limit NO_X emissions, low monitored values of NO_2 will continue in and around Wisconsin. In other words, NO_2 emissions from Wisconsin are not expected to cause or contribute to a violation of the 2010 NO_2 NAAQS in another state.

In this rulemaking, EPA is not evaluating section 110(a)(2)(D)(i)(I) requirements relating to significant contribution to transport for the 2008 ozone and 2010 SO_2 NAAQS. Instead, EPA will evaluate these requirements in a separate rulemaking. EPA proposes that Wisconsin has met the section 110(a)(2)(D)(i)(I) requirements relating to significant contribution to transport for the 2010 NO_2 NAAQS.

[5] The level of the 2010 NO_2 NAAQS is 100 parts per billion (ppb) and the form is the 3-year average of the annual 98th percentile of the daily 1-hour maximum. For the most recent design values, see *http://www.epa.gov/airtrends/values.html.*

2. Interstate Transport—Interfere With Maintenance

As described above, EPA has classified all areas of the country as ''unclassifiable/attainment'' for the 2010 NO_2 NAAQS, NO_2 design values in and around Wisconsin are lower than the standard, WDNR is able to control NO_2 emissions, and CSAPR requires reductions in NO_X emissions. In other words, NO_2 emissions from Wisconsin are not expected to interfere with the maintenance of the 2010 NO_2 NAAQS in another state.

In this rulemaking, EPA is not evaluating section 110(a)(2)(D)(i)(I) requirements relating to interference with maintenance for the 2008 ozone and 2010 SO_2 NAAQS. Instead, EPA will evaluate these requirements in a separate rulemaking. EPA proposes that Wisconsin has met the section 110(a)(2)(D)(i)(I) requirements relating to interference with maintenance for the 2010 NO_2 NAAQS.

3. Interstate Transport—Prevention of Significant Deterioration

Section 110(a)(2)(D)(i)(II) requires SIPs to include provisions prohibiting interference with PSD. In this rulemaking, we are not taking action on the state's satisfaction of PSD requirements. Instead, EPA will evaluate Wisconsin's compliance with PSD requirements in a separate rulemaking.

4. Interstate Transport—Protect Visibility

With regard to the applicable requirements for visibility protection of section 110(a)(2)(D)(i)(II), states are subject to visibility and regional haze program requirements under part C of the CAA (which includes sections 169A and 169B). The 2013 Guidance states that these requirements can be satisfied by an approved SIP addressing reasonably attributable visibility impairment, if required, or an approved SIP addressing regional haze.

On August 7, 2012, EPA published its final approval of Wisconsin's regional haze plan (*see* 77 FR 46952). Therefore, EPA is proposing that Wisconsin has met the visibility protection requirements of section 110(a)(2)(D)(i)(II) for the 2008 ozone, 2010 NO_2, and 2010 SO_2 NAAQS.

5. Interstate and International Pollution Abatement

Section 110(a)(2)(D)(ii) requires each SIP to contain adequate provisions requiring compliance with the applicable requirements of section 126 and section 115 of the CAA (relating to interstate and international pollution abatement, respectively).

Section 126(a) requires new or modified sources to notify neighboring states of potential impacts from the source. The statute does not specify the method by which the source should provide the notification. States with SIP-approved PSD programs must have a provision requiring such notification by new or modified sources. A lack of such a requirement in state rules would be grounds for disapproval of this element.

Wisconsin has provisions in its EPA-approved PSD program requiring new or modified sources to notify neighboring states of potential negative air quality impacts. Wisconsin's submissions reference these provisions as being adequate to meet the requirements of section 126(a). EPA proposes that Wisconsin has met the infrastructure SIP requirements of section 110(a)(2)(D)(ii) related to section 126(a) with respect to the 2008 ozone, 2010 NO_2, and 2010 SO_2 NAAQS.

The submissions from Wisconsin affirm that the state has no pending obligations under section 115. EPA proposes that Wisconsin has met the infrastructure SIP requirements of section 110(a)(2)(D)(ii) related to section 115 with respect to the 2008 ozone, 2010 NO_2, and 2010 SO_2 NAAQS.

E. Section 110(a)(2)(E)—Adequate Authority and Resources

This section requires each state to provide for adequate personnel, funding, and legal authority under state law to carry out its SIP, and related issues. Section 110(a)(2)(E)(ii) also requires each state to comply with the requirements respecting state boards under section 128.

1. Adequate Resources

Wisconsin's biennial budget ensures that EPA grant funds as well as state funding appropriations are sufficient to administer its air quality management program, and WDNR has routinely demonstrated that it retains adequate personnel to administer its air quality management program. Wisconsin's Environmental Performance Partnership Agreement with EPA documents certain funding and personnel levels at WDNR. As discussed in previous sections, basic duties and authorities in the state are outlined in *Wis. Stats.* 285.11. EPA proposes that Wisconsin has met the infrastructure SIP requirements of this portion of section 110(a)(2)(E) with respect to the 2008 ozone, 2010 NO_2, and 2010 SO_2 NAAQS.

2. State Board Requirements

Section 110(a)(2)(E) also requires each SIP to contain provisions that comply with the state board requirements of section 128 of the CAA. That provision contains two explicit requirements: (i) That any board or body which approves permits or enforcement orders under this chapter shall have at least a majority of members who represent the public interest and do not derive any significant portion of their income from persons subject to permits and enforcement orders under this chapter, and (ii) that any potential conflicts of interest by members of such board or body or the head of an executive agency with similar powers be adequately disclosed.

In today's action, EPA is neither proposing to approve nor disapprove the portions of the submissions from Wisconsin intended to address the state board requirements of section 110(a)(2)(E)(ii). Instead, EPA will take separate action on compliance with section 110(a)(2)(E)(ii) for the state at a later time. EPA is working with WDNR to address these requirements in the most appropriate way.

F. Section 110(a)(2)(F)—Stationary Source Monitoring System

States must establish a system to monitor emissions from stationary sources and submit periodic emissions reports. Each plan shall also require the installation, maintenance, and replacement of equipment, and the implementation of other necessary steps, by owners or operators of stationary sources to monitor emissions from such sources. The state plan shall also require periodic reports on the nature and amounts of emissions and emissions-related data from such sources, and correlation of such reports by each state agency with any emission limitations or standards established pursuant to this chapter. Lastly, the reports shall be available at reasonable times for public inspection.

WDNR requires regulated sources to submit various reports, dependent on applicable requirements and the type of permit issued, to the Bureau of Air Management Compliance Team. The frequency and requirements for report review are incorporated as part of NR 438 and NR 439. Additionally, WDNR routinely submits quality assured analyses and data obtained from its stationary source monitoring system for review and publication by EPA. Basic authority for Wisconsin's Federally mandated Compliance Assurance Monitoring reporting structure is provided in *Wis. Stats.* 285.65. EPA proposes that Wisconsin has met the infrastructure SIP requirements of section 110(a)(2)(F) with respect to the 2008 ozone, 2010 NO_2, and 2010 SO_2 NAAQS.

G. Section 110(a)(2)(G)—Emergency Power

This section requires that a plan provide for authority that is analogous to what is provided in section 303 of the CAA, and adequate contingency plans to implement such authority. The 2013 Guidance states that infrastructure SIP submissions should specify authority, rested in an appropriate official, to restrain any source from causing or contributing to emissions which present an imminent and substantial endangerment to public health or welfare, or the environment.

Wis. Stats. 285.85 provides the requirement for WDNR to act upon a finding that an emergency episode or condition exists. The language contained in this chapter authorizes WDNR to seek immediate injunctive relief in circumstances of substantial danger to the environment or to public health. EPA proposes that Wisconsin has met the applicable infrastructure SIP requirements for this portion of section 110(a)(2)(G) with respect to the 2008 ozone, 2010 NO_2, and 2010 SO_2 NAAQS.

H. Section 110(a)(2)(H)—Future SIP Revisions

This section requires states to have the authority to revise their SIPs in response to changes in the NAAQS, availability of improved methods for attaining the NAAQS, or to an EPA finding that the SIP is substantially inadequate.

Wis. Stats. 285.11(6) provides WDNR with the authority to develop all rules, limits, and regulations necessary to meet the NAAQS as they evolve, and to respond to any EPA findings of inadequacy with the overall Wisconsin SIP and air management programs. EPA proposes that Wisconsin has met the infrastructure SIP requirements of section 110(a)(2)(H) with respect to the 2008 ozone, 2010 NO_2, and 2010 SO_2 NAAQS.

I. Section 110(a)(2)(I)—Nonattainment Planning Requirements of Part D

The CAA requires that each plan or plan revision for an area designated as a nonattainment area meet the applicable requirements of part D of the CAA. Part D relates to nonattainment areas.

EPA has determined that section 110(a)(2)(I) is not applicable to the infrastructure SIP process. Instead, EPA takes action on part D attainment plans through separate processes.

J. Section 110(a)(2)(J)—Consultation With Government Officials; Public Notification; PSD; Visibility Protection

The evaluation of the submissions from Wisconsin with respect to the requirements of section 110(a)(2)(J) are described below.

1. Consultation With Government Officials

States must provide a process for consultation with local governments and Federal Land Managers (FLMs) carrying out NAAQS implementation requirements.

Wis. Stats. 285.13(5) contains the provisions for WDNR to advise, consult, contract, and cooperate with other agencies of the state and local governments, industries, other states, interstate or inter-local agencies, the Federal government, and interested persons or groups during the entire process of SIP revision development and implementation and for other elements regarding air management for which WDNR is the officially charged agency. WDNR's Bureau of Air Management has effectively used formal stakeholder structures in the development and refinement of all SIP revisions. Additionally, Wisconsin is an active member of the Lake Michigan Air Directors Consortium (LADCO), which provides technical assessments and a forum for discussion regarding air quality issues to member states. EPA proposes that Wisconsin has satisfied the infrastructure SIP requirements of this portion of section 110(a)(2)(J) with respect to the 2008 ozone, 2010 NO_2, and 2010 SO_2 NAAQS.

2. Public Notification

Section 110(a)(2)(J) also requires states to notify the public if NAAQS are exceeded in an area and to enhance public awareness of measures that can be taken to prevent exceedances. WDNR maintains portions of its Web site specifically for issues related to the 2008 ozone, 2010 NO_2, and 2010 SO_2 NAAQS.[6] Information related to monitoring sites is found on Wisconsin's Web site, as is the calendar for all public events and public hearings held in the state. EPA proposes that Wisconsin has met the infrastructure SIP requirements of this portion of section 110(a)(2)(J) with respect to the 2008 ozone, 2010 NO_2, and 2010 SO_2 NAAQS.

[6] *http://dnr.wi.gov/topic/AirQuality/Pollutants.html.*

3. PSD

States must meet applicable requirements of section 110(a)(2)(C) related to PSD. Wisconsin's PSD program in the context of infrastructure SIPs has already been discussed in the paragraphs addressing section 110(a)(2)(C) and (a)(2)(D)(i)(II). EPA will evaluate Wisconsin's compliance with the various PSD and GHG infrastructure SIP requirements of section 110(a)(2)(J) in a separate rulemaking.

4. Visibility Protection

With regard to the applicable requirements for visibility protection, states are subject to visibility and regional haze program requirements under part C of the CAA (which includes sections 169A and 169B). In the event of the establishment of a new NAAQS, the visibility and regional haze program requirements under part C do not change. Thus, we find that there is no new visibility obligation ''triggered'' under section 110(a)(2)(J) when a new NAAQS becomes effective. However, as EPA discussed above in section D, Wisconsin has a fully approved regional haze plan. This plan also meets the visibility requirements of section 110(a)(2)(J). EPA proposes that Wisconsin has satisfied the infrastructure SIP requirements of this portion of section 110(a)(2)(J) with respect to the 2008 ozone, 2010 NO_2, and 2010 SO_2 NAAQS.

K. Section 110(a)(2)(K)—Air Quality Modeling/Data

SIPs must provide for performing air quality modeling for predicting effects on air quality of emissions from any NAAQS pollutant and submission of such data to EPA upon request.

WDNR maintains the capability to perform computer modeling of the air quality impacts of emissions of all criteria pollutants, including both source-oriented and more regionally directed complex photochemical grid models. WDNR collaborates with LADCO, EPA, and other Lake Michigan states in order to perform modeling. *Wis. Stats.* 285.11, *Wis. Stats.* 285.13, and *Wis. Stats.* 285.60–285.69 authorize WDNR to perform modeling. EPA proposes that Wisconsin has met the infrastructure SIP requirements of section 110(a)(2)(K) with respect to the 2008 ozone, 2010 NO_2, and 2010 SO_2 NAAQS.

L. Section 110(a)(2)(L)—Permitting Fees

This section requires SIPs to mandate each major stationary source to pay permitting fees to cover the cost of reviewing, approving, implementing, and enforcing a permit.

WDNR implements and operates the title V permit program, which EPA approved on December 4, 2001 (66 FR 62951). EPA approved revisions to the program on February 28, 2006 (71 FR 9934). NR 410 contains the provisions, requirements, and structures associated with the costs for reviewing, approving, implementing, and enforcing various types of permits. EPA proposes that Wisconsin has met the infrastructure SIP requirements of section 110(a)(2)(L) for the 2008 ozone, 2010 NO_2, and 2010 SO_2 NAAQS.

M. Section 110(a)(2)(M)—Consultation/Participation by Affected Local Entities

States must consult with and allow participation from local political subdivisions affected by the SIP.

In addition to the measures outlined in the paragraph addressing WDNR's submittals regarding consultation requirements of section 110(a)(2)(J), as contained in *Wis. Stats.* 285.13(5), the state follows a formal public hearing process in the development and adoption of all SIP revisions that entail new or revised control programs or strategies and targets. For SIP revisions covering more than one source, WDNR is required to provide the standing committees of the state legislature with jurisdiction over environmental matters with a 60 day review period to ensure that local entities have been properly engaged in the development process. EPA proposes that Wisconsin has met the infrastructure SIP requirements of section 110(a)(2)(M) with respect to the 2008 ozone, 2010 NO_2, and 2010 SO_2 NAAQS.

V. What action is EPA taking?

EPA is proposing to approve most elements of submissions from Wisconsin certifying that its current SIP is sufficient to meet the required infrastructure elements under section 110(a)(1) and (2) for the 2008 ozone, 2010 NO_2, and 2010 SO_2 NAAQS.

EPA's proposed actions for the state's satisfaction of infrastructure SIP requirements, by element of section 110(a)(2) and NAAQS, are contained in the table below.

Element	2008 Ozone	2010 NO_2	2010 SO_2
(A)—Emission limits and other control measures	A	A	A
(B)—Ambient air quality monitoring/data system	A	A	A
(C)1—Program for enforcement of control measures	A	A	A
(C)2—PSD	NA	NA	NA
(D)1—I Prong 1: Interstate transport—significant contribution	NA	A	NA
(D)2—I Prong 2: Interstate transport—interfere with maintenance	NA	A	NA
(D)3—II Prong 3: Interstate transport—prevention of significant deterioration	NA	NA	NA
(D)4—II Prong 4: Interstate transport—protect visibility	A	A	A
(D)5—Interstate and international pollution abatement	A	A	A
(E)1—Adequate resources	A	A	A
(E)2—State board requirements	NA	NA	NA
(F)—Stationary source monitoring system	A	A	A
(G)—Emergency power	A	A	A
(H)—Future SIP revisions	A	A	A
(I)—Nonattainment planning requirements of part D	NA	NA	NA
(J)1—Consultation with government officials	A	A	A
(J)2—Public notification	A	A	A
(J)3—PSD	NA	NA	NA
(J)4—Visibility protection	A	A	A
(K)—Air quality modeling/data	A	A	A
(L)—Permitting fees	A	A	A
(M)—Consultation and participation by affected local entities	A	A	A

In the above table, the key is as follows:
A—Approve.
NA—No Action/Separate Rulemaking.

VI. Statutory and Executive Order Reviews

Under the CAA, the Administrator is required to approve a SIP submission that complies with the provisions of the CAA and applicable Federal regulations. 42 U.S.C. 7410(k); 40 CFR 52.02(a). Thus, in reviewing SIP submissions, EPA's role is to approve state choices, provided that they meet the criteria of the CAA. Accordingly, this action merely approves state law as meeting Federal requirements and does not impose additional requirements beyond those imposed by state law. For that reason, this action:

- Is not a ''significant regulatory action'' subject to review by the Office of Management and Budget under Executive Orders 12866 (58 FR 51735, October 4, 1993) and 13563 (76 FR 3821, January 21, 2011);
- Does not impose an information collection burden under the provisions of the Paperwork Reduction Act (44 U.S.C. 3501 *et seq.*);
- Is certified as not having a significant economic impact on a substantial number of small entities under the Regulatory Flexibility Act (5 U.S.C. 601 *et seq.*);
- Does not contain any unfunded mandate or significantly or uniquely affect small governments, as described in the Unfunded Mandates Reform Act of 1995 (Pub. L. 104–4);
- Does not have Federalism implications as specified in Executive Order 13132 (64 FR 43255, August 10, 1999);
- Is not an economically significant regulatory action based on health or safety risks subject to Executive Order 13045 (62 FR 19885, April 23, 1997);
- Is not a significant regulatory action subject to Executive Order 13211 (66 FR 28355, May 22, 2001);
- Is not subject to requirements of Section 12(d) of the National Technology Transfer and Advancement Act of 1995 (15 U.S.C. 272 note) because application of those requirements would be inconsistent with the CAA; and
- Does not provide EPA with the discretionary authority to address, as appropriate, disproportionate human health or environmental effects, using practicable and legally permissible methods, under Executive Order 12898 (59 FR 7629, February 16, 1994).

In addition, the SIP is not approved to apply on any Indian reservation land or in any other area where EPA or an Indian tribe has demonstrated that a tribe has jurisdiction. In those areas of Indian country, the rule does not have tribal implications and will not impose substantial direct costs on tribal governments or preempt tribal law as specified by Executive Order 13175 (65 FR 67249, November 9, 2000).

List of Subjects in 40 CFR Part 52

Environmental protection, Air pollution control, Incorporation by reference, Intergovernmental relations, Nitrogen dioxide, Ozone, Reporting and recordkeeping requirements, Sulfur dioxide.

Dated: April 2, 2015.

Susan Hedman,

Regional Administrator, Region 5.

[FR Doc. 2015–09051 Filed 4–17–15; 8:45 am]

BILLING CODE 6560–50–P

ENVIRONMENTAL PROTECTION AGENCY

40 CFR Part 136

[EPA–HQ–OW–2014–0797; FRL–9926–38–OW]

RIN 2040–AF48

Clean Water Act Methods Update Rule for the Analysis of Effluent; Comment Extension

AGENCY: Environmental Protection Agency (EPA).

ACTION: Proposed rule; extension of the public comment period.

SUMMARY: Environmental Protection Agency (EPA) received requests for an extension of the period for providing comments on the proposed rule entitled, ''Clean Water Act Methods Update Rule for the Analysis of Effluent,'' published in the **Federal Register** on February 19, 2015. EPA extends the comment period in order to provide the public additional time to submit comments and supporting information.

DATES: EPA extends the public comment period for the proposed rule published February 19, 2015, (80 FR 8956) to May 20, 2015.

ADDRESSES: Written comments on the proposed rule may be submitted to the EPA electronically, by mail, by facsimile or through hand delivery/courier. Please refer to the proposal (80 FR 8956) for the addresses and detailed instructions.

Docket. Publically available documents relevant to this action are available for public inspection either electronically at *http://www.regulations.gov* or in hard copy at the Water Docket in the EPA Docket Center, EPA/DC, EPA West, Room 3334, 1301 Constitution Ave. NW., Washington, DC. The Public Reading Room is open from 8:30 a.m. to 4:30 p.m., Monday through Friday, excluding legal holidays. The telephone number for the Public Reading Room is (202) 566–1744, and the telephone number for the Water Docket is (202) 566–2426. The EPA has established the official public docket No. EPA–HQ–OW–2014–0797.

FOR FURTHER INFORMATION CONTACT: Adrian Hanley, Engineering and Analysis Division (4303T), Office of Water, Environmental Protection Agency, 1200 Pennsylvania Ave. NW., Washington, DC 20460–0001; telephone: (202) 564–1564; email: *hanley.adrian@epa.gov.*

SUPPLEMENTARY INFORMATION:

Comment Period

The EPA is extending the previously announced public-comment period. The public comment period will end on May 20, 2015, rather than April 20, 2015. This will ensure that the public has sufficient time to review and comment on all of the information available, including the proposed rule and other materials in the docket.

List of Subjects in 40 CFR Part 136

Environmental protection, Incorporation by reference, Reporting and recordkeeping requirements, Test procedures, Water pollution control.

Dated: April 9, 2015.

Kenneth J. Kopocis,

Deputy Assistant Administrator, Office of Water.

[FR Doc. 2015–08890 Filed 4–17–15; 8:45 am]

BILLING CODE 6560–50–P

ENVIRONMENTAL PROTECTION AGENCY

40 CFR Part 271

[EPA–R01–RCRA–2015–0195; FRL–9926–53–Region 1]

Vermont: Proposed Authorization of State Hazardous Waste Management Program Revisions

AGENCY: Environmental Protection Agency (EPA).

ACTION: Proposed rule.

SUMMARY: EPA is proposing to grant final authorization to the State of Vermont for changes to its hazardous waste program. In the ''Rules and Regulations'' section of this **Federal Register** we are authorizing the changes to the Vermont hazardous waste program under the Resource Conservation and Recovery Act (RCRA) as a direct final rule without prior proposed rule. EPA has determined that these changes satisfy all requirements needed to qualify for final authorization. If we receive no adverse comment, we

will not take further action on this proposed rule

DATES: Written comments must be received by May 20, 2015.

ADDRESSES: Submit your comments, identified by Docket ID No. EPA–R01–RCRA–2015–0195, by mail to Sharon Leitch, RCRA Waste Management and UST Section, Office of Site Remediation and Restoration (OSRR07–1), U.S. EPA Region 1, 5 Post Office Square, Suite 100, Boston, MA 02109–3912. Comments may also be submitted electronically or thorough hand delivery/courier by following the detailed instructions in the **ADDRESSES** section of the direct final rule located in the rules section of this **Federal Register**.

FOR FURTHER INFORMATION CONTACT: Sharon Leitch, RCRA Waste Management and UST Section, Office of Site Remediation and Restoration (OSRR07–1), U.S. EPA Region 1, 5 Post Office Square, Suite 100, Boston, MA 02109–3912; telephone number: (617) 918–1647; fax number: (617) 918–0647; email address: *leitch.sharon@epa.gov*.

SUPPLEMENTARY INFORMATION: In the ''Rules and Regulations'' section of this **Federal Register,** EPA is authorizing these changes by a direct final rule. EPA did not make a proposal prior to the direct final rule because we believe this action is not controversial and do not expect adverse comments that oppose it. We have explained the reasons for this authorization in the preamble to the direct final rule. Unless we receive written adverse comments which oppose this authorization during the comment period, the direct final rule will become effective on the date it establishes, and we will not take further action on this proposal. If we get comments that oppose this action, we will withdraw the direct final rule and it will not take immediate effect. We will then respond to public comments in a later final rule based on this proposal. You may not have another opportunity for comment. If you want to comment on this action, you should do so at this time.

Dated: March 24, 2015.

H. Curtis Spalding,

Regional Administrator, EPA Region 1.

[FR Doc. 2015–08996 Filed 4–17–15; 8:45 am]

BILLING CODE 6560–50–P

LEGAL SERVICES CORPORATION

45 CFR Parts 1610, 1627, and 1630

Use of Non-LSC Funds, Transfer of LSC Funds, Program Integrity; Subgrants and Membership Fees or Dues; Cost Standards and Procedures

AGENCY: Legal Services Corporation.

ACTION: Notice of proposed rulemaking.

SUMMARY: This proposed rule revises the Legal Services Corporation (LSC or Corporation) regulations governing transfers of LSC funds, subgrants to third parties, and cost standards and procedures.

DATES: Comments must be submitted by May 20, 2015.

ADDRESSES: You may submit comments by any of the following methods:

Email: SubgrantRulemaking@lsc.gov. Include ''Subgrant Rulemaking'' in the subject line of the message.

Fax: (202) 337–6519, ATTN: Subgrant Rulemaking.

Mail: Stefanie K. Davis, Assistant General Counsel, Legal Services Corporation, 3333 K Street NW., Washington, DC 20007, ATTN: Subgrant Rulemaking.

Hand Delivery/Courier: Stefanie K. Davis, Assistant General Counsel, Legal Services Corporation, 3333 K Street NW., Washington, DC 20007, ATTN: Subgrant Rulemaking.

Instructions: Electronic submissions are preferred via email with attachments in Acrobat PDF format. LSC may not consider written comments sent via any other method or received after the end of the comment period.

FOR FURTHER INFORMATION CONTACT: Stefanie K. Davis, Assistant General Counsel, Legal Services Corporation, 3333 K Street NW., Washington, DC 20007, (202) 295–1563 (phone), (202) 337–6519 (fax), *sdavis@lsc.gov.*

SUPPLEMENTARY INFORMATION:

I. Regulatory History

A. Part 1627. LSC initially promulgated 45 CFR part 1627 in 1983 to improve its oversight of and accountability for LSC funds transferred by recipients to third parties. 48 FR 54206, 54207, Nov. 30, 1983. Prior to the issuance of part 1627, LSC did not regulate subawards of its funds. LSC intended part 1627 to apply to all transfers of LSC funds, which it described in the rule as subgrants, fees and dues, contributions, transfers to other recipients (considered a type of subgrant), training and education activities, and payments to tax-sheltered annuities, retirement accounts, and pensions on behalf of employees. *Id.* at 54209. LSC did not intend the rule to govern a recipient's procurement of goods and services for its own use. 48 FR 28485, June 22, 1983; 48 FR 54206, 54209, Nov. 30, 1983.

In the proposed rule for part 1627, LSC defined the term *subgrant* as

> any transfer of funds received from the Corporation by a recipient to any organization for the purpose of carrying out a portion of the recipient's program under a grant or contract from the Corporation; it shall not include a contract for services to be rendered directly to the recipient, nor shall it include any contract with private attorneys or law firms for the direct provision of legal services to eligible clients.

48 FR 28485, 28486, June 22, 1983. In the final rule, LSC incorporated the quoted language into the definition of *subrecipient,* along with new language explaining what LSC considered activities conducted ''for the purpose of carrying out a portion of the recipient's program.'' 48 FR 54206, 54207, Nov. 30, 1983. LSC also made contracts with private attorneys or law firms for the direct provision of legal services to eligible clients subject to the subgrant rule if the contract cost exceeded $25,000. *Id.* LSC redefined the term *subgrant* as ''any transfer of Corporation funds from a recipient which qualifies the organization receiving such funds as a subrecipient under the [revised definition of subrecipient].'' *Id.*

In part 1627, LSC established the process by which a recipient could seek approval of a proposed subgrant, the maximum duration of a subgrant, the recipient's responsibilities for ensuring compliance with LSC's fiscal and audit requirements, and the recipient's responsibility to repay any disallowed costs. 48 FR 54206, 54209, Nov. 30, 1983. LSC also asserted its own rights to oversee subgrants to ensure the subgrantees' compliance with the LSC Act and other applicable statutes, LSC's regulations, and Corporation guidelines and instructions. *Id.* A separate section of the rule made these requirements applicable to subgrants from one LSC recipient to another. *Id.* Because a subgrant of LSC funds from one LSC recipient to another is a transfer of funds granted by the same agency, LSC established reporting, accounting, and repayment rules for these types of arrangements that reflect LSC's relationship to both parties. *Id.* at 54210.

LSC last revised part 1627 in 1996. LSC published an interim rule to reflect the complete prohibition on the use of LSC funds to pay fees or dues enacted as part of its fiscal year 1996 appropriations act (''FY96 appropriations act''). Sec. 505, Public Law 104–134, 110 Stat. 1321 (1996).

LSC also added a requirement that recipients establish adequate recordkeeping policies to document compliance with part 1627. 61 FR 45753, 45754, Aug. 29, 1996. The subgrant provisions remained unchanged, as did the provisions prohibiting contributions of LSC funds to other organizations and allowing recipients to make payments to tax-sheltered annuity funds, retirement accounts, or pension funds on behalf of its employees. *Id.* at 45753. The interim rule became final with only minor, non-substantive changes in 1997. 62 FR 19417, Apr. 21, 1997.

B. Part 1610. Part 1610 implements the statutory restrictions on the use of non-LSC funds by LSC recipients. 45 CFR 1610.1. Originally promulgated in 1976, part 1610 has been revised relatively frequently due to changes in statutory restrictions and in LSC's policies regarding the application of those restrictions. As with part 1627, LSC amended part 1610 in 1996 and 1997 to implement new restrictions Congress placed on recipients' LSC and non-LSC funds through the FY96 appropriations act. Sec. 504, Public Law 104–134, 110 Stat. 1321 (1996). Relevantly, in the December 1996 final rule, LSC added § 1610.7 to govern the application of the LSC Act restrictions and the FY96 appropriations act restrictions to recipient transfers of LSC funds and non-LSC funds to third parties. 61 FR 63749, 63752, Dec. 2, 1996. Newly added § 1610.7 also established requirements for aligning a third-party's priorities for the use of transferred funds with the LSC recipient's priorities and for timekeeping on cases and matters undertaken with the transferred funds. *Id.*

LSC issued a new interim rule in March 1997 in which it removed transfers of non-LSC funds from § 1610.7. 62 FR 12101, Mar. 14, 1997. LSC made this change to part 1610 in response to an order issued by the United States District Court for the District of Hawaii preliminarily enjoining LSC from enforcing the application of some of the FY96 appropriations act restrictions to non-LSC funds. *Id.; see also Legal Aid Society of Hawaii* v. *Legal Services Corporation,* 961 F. Supp. 1402 (D. Haw. 1997). LSC made no other changes to § 1610.7 as it applied to transfers of LSC funds. Section 1610.7 became final with only minor, non-substantive changes. 62 FR 27695, 27699, May 21, 1997.

In 2010, LSC revised part 1610 in response to legislation that removed the FY96 appropriations act restriction on recipients' ability to claim or collect attorneys' fees. 79 FR 21506, 21508, Apr. 26, 2010. The 2010 revision did not affect § 1610.7.

II. History of This Rulemaking

A. Office of Inspector General Audit of the Technology Initiative Grant Program. In 2010, LSC's Office of Inspector General (OIG) conducted an audit of the Corporation's Technology Initiative Grant (TIG) program. Among its findings was a conclusion that LSC improperly applied part 1627 to the TIG program. Audit of Legal Services Corporation's Technology Initiative Grant Program, Report No. AU–11–01, at 41–44, Dec. 2010. In support of its finding, OIG looked to the definition of the term *subrecipient,* particularly the portion stating that the entity receiving the award of LSC funds ''agree[s] to conduct certain activities specified by or supported by the [original] recipient related to the recipient's programmatic activities. Such activities would normally include those that might otherwise be expected to be conducted by the recipient itself[.]'' *Id.* at 41; *see also* 45 CFR 1627.2(b)(1). Based on this language, OIG found that

> LSC's subgrant rule applies to all payments made by TIG grantees to third parties that then carry out some or all of the activities that 'might otherwise be expected to be conducted directly by the recipient' of a TIG grant made for the purposes specified in the grant documents. The TIG grants specify programmatic purposes other than the direct provision of legal services, namely the implementation of certain technological improvements. Payments by TIG grantees to third parties for services that fall within these purposes amount to subgrants within the meaning of LSC's regulations as currently written and should be administered consistent with the requirements of Part 1627.

Id. at 42.

OIG reached the same conclusion regarding the application of § 1610.7 to third-party payments of TIG funds. *Id.* at 50.

OIG noted in its report that

> the programmatic purposes of some TIG grants appeared to overlap the sort of business services that might not be treated as subgrants in other contexts. There is a degree of ambiguity in the application of LSC's subgrant rule to grants with relatively narrow, technological programmatic purposes, as was the case with some TIG grants. Part 1627 draws a distinction between payments to third parties to carry out activities 'related to the [grantee's] programmatic activities,' which must be treated as subgrants, and services provided by 'vendors or consultants in the normal course of business,' which need not be treated as subgrants when the services 'would not be expected to be provided directly by the [grantee] itself.' The subgrant rule appears to have been written with the LSC's principal legal service grants in mind, such that ordinarily, programmatic activities consist of the provision of legal services, and business services can easily be classified as ancillary. This division is not as easy to make in the case of TIG grants, and the rule does not seem to have anticipated this problem.

Id. at 42.

OIG recommended that LSC Management ''initiate a process to amend LSC regulations to account for [unique features of TIG projects]. . . .'' *Id.* at 44. Management responded that LSC would review the subgrant rule ''to determine whether it adequately accounts for the unique features of TIGs'' and to determine whether to make recommendations for revising part 1627 to the Board of Directors. *Id.* Management also affirmed its reading of the subgrant rule by stating that it had consulted the Office of Legal Affairs to distinguish between ''programmatic subgrants'' and ''non-programmatic expenditures for goods and services. . . .'' *Id.* at 45. OIG considered Management's proposal to be responsive, but noted that its own recommendation contemplated rulemaking beyond merely making changes to part 1627. *Id.* OIG stated that it would leave the recommendation open until ''all actions are completed and the OIG is notified of the results.'' *Id.*

B. 2012 Initiation of Rulemaking. Consistent with its response to OIG's recommendation, LSC Management presented a Rulemaking Options Paper (''ROP'') and Management recommendation to the Operations and Regulations Committee (''Committee'') of the LSC Board of Directors (''Board'') at its quarterly meeting on April 16, 2012. In the ROP, LSC staff discussed options for addressing two issues raised by OIG's report. The first set of options pertained to LSC's oversight of TIG subawards to third parties that were not considered subgrants. The second set of options related to OIG's recommendation to revise the regulations to account for the special features of TIGs.

With respect to LSC's oversight of non-subgrant awards of TIG funds, OIG was satisfied that LSC's newly adopted TIG third-party contracting policy addressed its concerns. OIG consequently closed the related recommendations. In light of this development, Management recommended against rulemaking to respond to OIG's recommendations. The Committee voted to adopt Management's recommendation.

LSC developed three options to address OIG's concern that TIG subawards were not treated properly as subgrants. LSC first proposed that the Board could choose not to engage in rulemaking on the matter and let Management continue to apply its interpretation of the subgrant rules at part 1627 and the transfer rule at part 1610. LSC's next options each contemplated rulemaking, but in opposing directions. The second option proposed initiating rulemaking to adopt Management's interpretation of part 1627: That in order to be considered a subgrant, the award to a third party must be for carrying out the recipient's overall programmatic purpose of providing legal assistance to eligible clients. The last option was to initiate rulemaking to adopt OIG's interpretation of the rule: That a subgrant is any award to a third party to carry out the programmatic purposes of the particular grant from which the award is made.

In its memo to the Committee, Management recommended that the Committee initiate rulemaking to amend parts 1610 and 1627. Management believed that both rules should be amended to reflect LSC's ''longstanding reading of these rules—that is, that both rules are designed to address legal services activities.'' Management explained that the transfer rule, which takes the definition of ''transfer'' substantially from part 1627,

> subjects the transferee to all of LSC's substantive restrictions on legal services activities, including the 1996 restrictions that reach the use of non-LSC funds. These restrictions involve *legal services* activities (such as class actions, representation of aliens, and lobbying) and *legal aid program operations* (such as program priorities and timekeeping for cases and matters). As with the subgrant rule, the transfer rule does not extend those restrictions to non-programmatic procurement of goods or services. *Management does not believe it would be prudent grant management to extend these types of restrictions and requirements to third-party vendors that provide business services and technology services as part of TIGs.* These LSC restrictions are meant to apply to entities that receive LSC funds for the provision of legal services under the LSC Act.

Management further explained that its interpretation avoids absurd results in other contexts. For example, LSC makes disaster relief grants to recipients whose offices have been damaged or destroyed by natural disasters. Those grants may be used to hire contractors to rebuild the offices or purchase new office supplies. Under OIG's reading, Management said, the building contractor would become a subgrantee under part 1627 because the purpose of the emergency grant is to help the recipient rebuild. Under Management's interpretation of parts 1610 and 1627, it would not.

The Committee accepted Management's recommendation. On April 16, 2012, the Chairman of the Committee presented the Committee's recommendation to initiate rulemaking on parts 1610 and 1627 to the Board of Directors for a vote. Some members of the Board raised concerns that because conflicting interpretations of parts 1610 and 1627 were the impetus for the rulemaking, rulemaking was perhaps an inefficient and inappropriate vehicle for resolving the dispute. Rather than voting on the Committee's recommendation, the Board voted to return the issue to the Committee to determine whether LSC could adopt a particular interpretation of parts 1610 and 1627 through a policy document rather than through rulemaking.

In response to the Board's instruction, the Committee directed LSC and OIG staff to determine whether LSC had options other than rulemaking to resolve the ambiguity regarding which subawards were covered by part 1627. The Committee met telephonically on June 18, 2012, to discuss the results of the staff deliberations. Both OIG and Management concluded that rulemaking was necessary to ensure that part 1627 reflected Management's concept of subgrants as awards to a third party for carrying out part of an LSC recipient's grant to provide legal services to eligible clients. The Committee concurred, and voted again to recommend that the Board initiate rulemaking to revise the subgrant rule.

On July 27, 2012, the Chairman of the Committee presented the Committee's recommendation to the Board of Directors. The Board accepted the recommendation and directed LSC staff to develop a draft rule for the Board's consideration, and OIG closed the related recommendation from its report. The rulemaking, however, became a lower priority on the Committee's agenda as a result of two factors. The first was the issuance of LSC's Pro Bono Task Force Report, which led to the extensive rulemaking process to revise part 1614. The second was the need to revise parts 1613 and 1626 to accommodate legislative changes to LSC's authority to provide legal assistance to individuals facing criminal charges in tribal courts and to certain non-citizen victims of violence, respectively. LSC revived the part 1627 rulemaking as a priority item on its 2015–2016 rulemaking agenda.

On April 12, 2015, the Committee voted to recommend that the Board publish this NPRM in the **Federal Register** for notice and comment. On April 14, 2015, the Board accepted the Committee's recommendation and approved publication of the NPRM.

III. Section-by-Section Analysis of Proposed Changes.

As will be discussed in more detail below, LSC proposes to revise part 1627 to adopt Management's interpretation of the rule as applying only to those subgrants awarded to third parties for the purpose of carrying out legal assistance activities authorized by the recipient's LSC grant. LSC also proposes to transfer § 1610.7, which governs the applicability of the restrictions placed upon acceptance of LSC funds by the LSC Act and § 504 of LSC's fiscal year 1996 appropriations act, to part 1627. Finally, LSC proposes to transfer existing §§ 1627.4, 1627.5, and 1627.7 from part 1627 to part 1630, which governs the allowability and allocability of costs to LSC grants. LSC seeks comments on each of the proposed changes.

A. Proposed Changes to Part 1627

§ 1627.1 Purpose. LSC proposes to revise this section to state more clearly that part 1627 establishes the requirements for subgrants of LSC funds.

§ 1627.2 Definitions. LSC proposes to alphabetize the definitions for ease of reference. Because LSC is proposing to relocate existing § 1627.4 to part 1630, LSC proposes to remove the definition of *membership fees or dues* currently located in paragraph (c) of this section.

§ 1627.2(a) Private attorney. LSC proposes to adopt the definition of the term *private attorney* established by 45 CFR part 1614.

§ 1627.2(b) Programmatic. LSC proposes to define the term *programmatic* to mean ''activities or functions carried out for the purpose of providing legal assistance, as defined in § 1002 of the LSC Act, 42 U.S.C. 2996a(5).'' Programmatic activities do not include the provision of goods or services by vendors or consultants that the recipient would not be expected to provide itself.

LSC proposes defining *programmatic* to explicitly reference the definition of *legal assistance* provided in the LSC Act to ensure that Management's interpretation of part 1627 applies. In other words, activities are programmatic only if they are conducted in furtherance of a recipient's grant to provide legal assistance to eligible clients. Activities are *not* programmatic if they are technical in nature, such as

the provision of web development services.

§ 1627.2(c) Recipient. LSC proposes to remove recipients of grants or contracts awarded under section 1006(a)(3) of the LSC Act, 42 U.S.C. 2996e(a)(3), from the definition of *recipient.* Section 1006(a)(3) of the LSC Act authorizes LSC ''to undertake directly, or by grant or contract, the following activities relating to the delivery of legal assistance—research . . . training and technical assistance, and [] to serve as a clearinghouse for information.'' 42 U.S.C. 2996e(a)(3). LSC proposes to remove these types of awards from the scope of part 1627 because, as Congress stated, the activities funded through these awards are related to the delivery of legal assistance, but are not themselves an integral part of a recipient's delivery of legal assistance. LSC currently does not make awards under § 1006(a)(3) of the LSC Act; if LSC did, 45 CFR part 1630, LSC's cost standards and procedures, would continue to govern entities receiving such awards.

§ 1627.2(d) Subgrant. LSC proposes to revise the definition of *subgrant* currently in § 1627.2(b)(2). LSC proposes to adopt a definition that substantially mirrors the definition of *subaward* contained in the Uniform Grants Guidance (UGG), 2 CFR 200.92, which applies to Federal awards. LSC proposes to revise the definition to make clear that the purpose of the award is to carry out part of the recipient's grant to provide legal assistance and to remove the references to ''pass-through entities.'' LSC is not bound by the UGG, and does not intend, by adopting this definition, to obligate itself or its recipients to abide by the rules for pass-through entities and subgrantees established by the UGG.

LSC proposes to retain the exclusion from the definition of *subgrant* for judicare arrangements or contracts with private attorneys for the direct delivery of legal assistance to recipients' clients. LSC also seeks comment regarding the $25,000 threshold for private attorney involvement (PAI) contracts supported with LSC funds. During the rulemaking to revise part 1614 on PAI, LSC received a comment recommending that LSC increase the threshold from $25,000 to $60,000 to account for inflation since LSC established the $25,000 threshold in 1983. 70 FR 61770, 61780, Oct. 15, 2014. After consideration, LSC determined that it would benefit from receiving additional information before making any adjustments to the threshold. For this reason, *LSC specifically requests comments on whether it should amend the $25,000 threshold, on what amount LSC should set as the new threshold, and providing justification for the proposed threshold.*

§ 1627.2(e) Subrecipient. LSC proposes to simplify the existing definition of *subrecipient* currently located at § 1627.2(b)(1). LSC proposes to move relevant portions of the current definition to the definitions of *programmatic* and *subgrant* to improve clarity. The revised definition will continue to make clear that a single entity may be a subrecipient with respect to some activities, while not being a subrecipient for other activities it conducts for a recipient.

§ 1627.3 Characteristics of subgrants. LSC proposes to add a new § 1627.3 stating the factors that recipients should consider in determining whether a potential award is a subgrant and requiring recipients to support subgrants using funds, rather than goods or services. LSC proposes to add this section to provide recipients with a framework for determining whether a proposed award to a third party is a subgrant subject to the requirements of this part. This section will make clear that subgrants are awards to third parties that support a recipient's delivery of legal assistance to eligible clients, consistent with Management's interpretation of part 1627.

The first two paragraphs of proposed § 1627.3 are taken substantially from the UGG, specifically 2 CFR 200.330. Paragraph (a) adopts the language at § 200.330(c), which explains that the listed characteristics are indicative of a subgrant, but need not all be present in order for an award to be considered a subgrant. Paragraph (b) sets forth the characteristics of a subgrant from § 200.330(a), with minor revisions to make clear that the context for subgrant activities and the performance of the subrecipient is the LSC recipient's legal services work.

In considering whether an award should be a subgrant, the primary question is whether the work the subrecipient is doing essentially substitutes for the recipient's legal services work. The following examples demonstrate whether certain types of awards to third parties meet the characteristics of a subgrant.

Example 1: An LSC recipient provides an award to another legal services organization to conduct telephone intake and refer cases either to private attorneys for handling or to another organization if the caller is not eligible for LSC-funded legal assistance. This award would properly be considered a subgrant because it meets all five of the characteristics. First, the subrecipient is responsible for determining who is eligible, including whether the person's case is within the recipient's priorities, for legal assistance under the recipient's LSC grant. Second, the subrecipient's performance in referring cases to private attorneys is measured in relation to the recipient's objectives for referring cases to private attorneys in order to meet the requirements of the PAI rule. Third, the subrecipient has responsibility for programmatic decisionmaking because it determines which types of cases it will refer to private attorneys and which it will refer to another provider. Fourth, as it acknowledges in the subgrant agreement, the subrecipient is responsible for adhering to applicable LSC program requirements specified in the award. Finally, the subrecipient will use the LSC funds to carry out legal assistance activities authorized by LSC's governing statutes and regulations, as opposed to providing goods or services for the benefit of the recipient.

Example 2: An LSC recipient provides an award to a web designer to develop an online portal for clients and other stakeholders to obtain general legal information about particular areas of law, such as divorces and bankruptcies, as well as contact information for the legal services providers in the state. This award would not be a subgrant because it does not have most of the characteristics set forth in § 1627.3(b). The web designer does not determine eligibility to receive legal assistance under the recipient's LSC grant, nor does it have responsibility for programmatic decision making. The designer does not have its performance measured in relation to whether the recipient's objectives for providing legal services are met, and it is not required to adhere to the programmatic requirements set forth in the recipient's award from LSC. With respect to the fifth characteristic—that the subrecipient uses LSC funds to carry out a program for a public purpose specified in LSC's governing statutes and regulations, rather than providing goods or services for the recipient's benefit—there is room for debate about whether the web designer's work is for the public purpose of providing legal information to eligible clients, or is instead technical services provided for the benefit of the recipient. On balance, however, this type of award appears to be considered more appropriately as a procurement contract.

LSC reminds recipients that awards of LSC funds to third parties that do not meet the characteristics of subgrants, including procurements of services, must meet the applicable requirements of 45 CFR part 1630, as well as the

Property Acquisition and Management Manual (PAMM).

Proposed paragraph (c) states that any award to a third party that is determined to be a subgrant based on an analysis of the factors in paragraph (b) must be supported using LSC funds. LSC has learned that some recipients have entered into agreements with other entities in which the recipients provided goods, including office space and office supplies, in exchange for the other entities' carrying out PAI activities on behalf of the recipient. The recipients in question did not seek prior approval of these agreements because they were exchanges of goods and services, rather than funds; therefore, the recipients did not consider the arrangements to be subgrants subject to the requirements of part 1627.

As an organization responsible for disbursing and ensuring accountability for the use of appropriated public funds, LSC must be able to determine that any funds it awards are spent consistent with the terms of its governing statutes and regulations. It is difficult to ensure that goods and services, which may be purchased in whole or in part with LSC funds, transferred to a third party are used in a manner consistent with LSC's governing statutes. Ensuring the accountability of LSC-supported resources is particularly crucial when the resources are provided to a third party that conducts restricted activities in addition to the activities that it is carrying out on behalf of an LSC recipient. In order to ensure the proper use of LSC funds by any entity receiving those funds or resources supported by those funds, LSC believes that any arrangement qualifying as a subgrant under § 1627.3(b) must be paid for with actual funds and not with goods or services.

§ 1627.4 Requirements for all subgrants. LSC proposes to transfer existing § 1627.4, prohibiting the use of LSC funds to pay membership fees or dues, to part 1630. LSC proposes this transfer to limit the scope of part 1627 to subgrants and to move a provision pertaining to the allowability of costs to the part of LSC's regulations governing cost standards. To accommodate the inclusion of new § 1627.3, LSC proposes to restructure existing § 1627.3 and redesignate it as § 1627.4. LSC also proposes to revise the text of certain paragraphs to reflect changes to the grant approval process and the resulting changes to the subgrant approval process.

§ 1627.4(a) Corporation approval of subgrants. LSC proposes to revise paragraph (a) to tell recipients how to submit subgrant applications for approval. The process will vary based on the type of grant—Basic Field or special—for which the recipient seeks to award a subgrant, and the time at which the recipient is seeking approval.

In paragraph (a)(1)(i), LSC proposes that recipients must submit applications for subgrants of Basic Field Grant funds at the same time as recipients submit their proposals for Basic Field Grant funding. This would consolidate the subgrant approval process with the main grant competition process. LSC also proposes to prescribe the format and substance of requests for subgrant approval annually through notice in the **Federal Register**. Finally, in paragraph (a)(1)(ii), LSC proposes to inform recipients of its decision to approve, disapprove, or suggest modifications to the proposed subgrants prior to or at the same time as it informs recipients of its decision whether to award Basic Field Grant funding.

In paragraph (a)(2), LSC proposes to formalize in regulation its current process for requesting and approving subgrants in its special grant programs. The application and award processes for special grants proceed on different schedules from the Basic Field Grant application and award process. LSC's special grant programs are all programs outside of Basic Field Grants—which include Basic Field-Migrant and Basic Field-Native American grants. TIG and the Pro Bono Innovation Fund (PBIF) grants are examples of special grants, as are disaster relief grants.

As described in proposed paragraph (a)(2)(i), recipients currently submit applications for approval of subgrants in special grant programs after LSC has awarded them grants. Because the special grant programs are highly competitive, LSC structured the process this way to avoid making recipients invest significant amounts of time in developing, finalizing, and executing subgrant agreements for projects that ultimately are not funded. To allow for flexibility in the form and substance of subgrant applications for the special grant programs, LSC also proposes in this paragraph to publish the requirements for subgrant applications on its Web site and in the **Federal Register** on an annual basis.

In paragraph (a)(2)(ii), LSC proposes to adopt existing § 1627.3(a)(2) in substantial part. LSC proposes to require recipients to submit applications for subgrant approval at least 45 days prior to the start date of the subgrant. LSC will consider and make a decision to approve, disapprove, or suggest modifications to applications for approval. Recipients may resubmit for approval applications to which LSC suggested modifications or that LSC has disapproved. LSC proposes to omit the sentence deeming subgrants approved if LSC fails to make a decision on the subgrant application within the specified period of time. LSC is committed to making timely decisions on recipient requests for subgrant approval and does not believe the current policy is consistent with its responsibility to ensure that recipients spend their LSC funds efficiently and effectively.

Finally, LSC proposes to establish in § 1627.4(a)(3) a process for the submission and approval of subgrant applications during the grant period for both Basic Field and special grants. LSC recognizes that unanticipated situations, such as the need to terminate and replace an underperforming subrecipient, may cause a recipient to need approval of a subgrant during the grant period. For mid-grant subgrant applications, LSC proposes in paragraph (a)(3)(i) that recipients should submit an application, using the format prescribed by LSC on its Web site and in the **Federal Register**. Finally, LSC proposes to adopt the 45-day period for submission of applications established in paragraph (a)(2)(ii) of this section.

LSC proposes conforming changes to existing § 1627.3(a)(3), which will be relocated to § 1627.4(a)(4).

LSC proposes to remove existing § 1627.3(a)(4), which authorized the extension of subgrants that were being executed at the time part 1627 became effective in 1983. This rule is obsolete and should be removed from part 1627. Finally, LSC proposes to relocate existing § 1627.3(b)(3), which requires recipients to seek Corporation approval of any substantial changes in the scope, objectives, or funding amount of a subgrant, to § 1627.4(a)(5) without change. LSC proposes this change to place all requirements for Corporation approval of subgrant proposals or substantial changes within the same paragraph.

§ 1627.4(b) Duration of subgrant. LSC proposes to revise paragraph (b) to establish the maximum length of subgrant periods. For Basic Field grants, LSC proposes to limit subgrant periods to one year and to require recipients to submit a new application for each subgrant in each year of the Basic Field grant. For special grants, including TIG and PBIF grants, LSC proposes to allow the maximum subgrant period to match the period of the recipient's special grant.

Recipients of Basic Field grants must either compete for new grants or apply for renewal of their current grants annually. This schedule supports a

conclusion that recipient's subgrants should likewise be reviewed annually to ensure that the subgrants comply with LSC's statutes and regulations, and that the subgrants represent an effective and efficient use of the recipient's LSC resources.

By contrast, special grants are for discrete, time-limited projects that may require recipients to engage the subrecipient for the life of the project in order to secure the subrecipient's participation. Additionally, LSC requires special grant recipients to report more frequently about their progress toward meeting project milestones or objectives. This increased reporting allows LSC to assess whether a recipient's subgrants are performing effectively and efficiently throughout the grant period. Because reporting on the performance of a special grant, including the performance of subrecipients of special grant funds, occurs more frequently than once a year, it is not necessary for LSC to limit the maximum duration of a subgrant awarded as part of a special grant to one year.

For similar reasons, LSC proposes to treat subgrant funds remaining at the end of the grant year differently. In paragraph (b)(1), LSC proposes to retain the existing language stating that unexpended Basic Field subgrant funds will be considered part of the recipient's available LSC funds. In paragraph (b)(2), LSC proposes to require recipients to return funds remaining on a special grant program subgrant at the end of the grant term to LSC, unless the recipient requests and receives approval from the Corporation to retain such funds. This approach is consistent with the current terms of both the TIG and PBIF grant assurances, which allow recipients to ask LSC for approval to retain any funds that were awarded by LSC to carry out the project, but that were not spent because of lower costs or increased efficiencies in the operation of the project.

LSC proposes to redesignate existing § 1627.3(b)(2) as § 1627.4(b)(3) with revisions. The most substantive of the proposed revisions deletes the references to termination and denials of refunding as the exclusive events for which recipients should have procedures for the orderly termination of subgrants, and replaces them with general language that subgrants should terminate ''in the event that the recipient is no longer an LSC recipient.'' LSC proposes adopting the general language to reflect that a recipient's policies governing the orderly termination of subgrants should apply in any instance where the recipient ceases to be an LSC recipient, including termination by LSC, voluntary termination by the recipient, or a failure to receive funding through competition. The other changes LSC proposes are editorial.

§ 1627.4(c) Recipient responsibilities. For ease of reference, LSC proposes to restructure and consolidate the paragraphs of existing § 1627.3 governing the recipient's particular oversight and repayment obligations into a new § 1627.4(c). Proposed paragraphs (c)(1) and (2) adopt the first two sentences of existing § 1627.3(c) regarding recipients' duties to ensure that their subrecipients comply with LSC's financial and audit provisions and to ensure that their subrecipients properly spend, account for, and audit subgrant funds, respectively. LSC proposes to relocate existing § 1627.3(d), which requires a recipient to repay LSC for any disallowed expenditures of LSC funds incurred by a subrecipient, to paragraph (c)(3).

§ 1627.4(d) Accounting of funds. LSC proposes to restructure and consolidate the paragraphs of existing § 1627.3 governing the accounting of subgrant funds into a new § 1627.4(d). This paragraph states that subgrants of LSC funds are subject to the audit and financial requirements of the Audit and Accounting Guide for Recipients and Auditors. LSC proposes to delete the last two sentences in existing § 1627.3(c), which authorize recipients to enter into subgrant agreements that provide for an alternate auditing method. LSC is not aware that this provision has been used and proposes to remove it as unnecessary.

§ 1627.4(e) Oversight. LSC proposes to relocate existing § 1627.3(e) to new § 1627.4(e) with minor editorial changes.

§ 1627.5 Applicability of restrictions, timekeeping, and recipient priorities; private attorney involvement subgrants. LSC proposes to transfer existing § 1627.5, prohibiting the use of LSC funds to make contributions or gifts to other organizations or individuals, to part 1630. LSC proposes this transfer to limit the scope of part 1627 to subgrants and to move another provision pertaining to the allowability of costs to the part of LSC's regulations governing cost standards.

Additionally, because LSC has considered subgrants and transfers as functionally the same, LSC proposes to transfer 45 CFR 1610.7, the transfer rule, to part 1627 and redesignate it as § 1627.5. The restrictions listed in 45 CFR 1610.2—restrictions established by both the LSC Act and the FY96 appropriations act—will continue to apply to all subgrants. LSC proposes to make only minor edits to paragraphs (a) and (b) for clarity.

§ 1627.5(c) Timekeeping. LSC proposes to move the timekeeping requirement to its own paragraph and revise the requirement itself. Currently, § 1610.7(b)(2) requires only that recipients ''maintain records of time spent on each case or matter undertaken with the funds transferred.'' In the preamble to the 1997 final rule, LSC tied the timekeeping requirement to the language in Section 504(a)(10)(A) of the FY96 appropriations act, which prohibited LSC funds from being awarded to any person or entity unless ''prior to receiving the financial assistance, such person or entity agrees to maintain records of time spent on each case or matter with respect to which the person or entity is engaged.'' Sec. 504(a)(10)(A), Pub. L. 104–134, 110 Stat. 1321, 1321–54. LSC stated in the preamble that the rule did not require recipients ''to keep time in accordance with the Corporation's timekeeping regulation, 45 CFR part 1635,'' but also did not provide guidance to recipients about the level of timekeeping that would be sufficient ''to ensure accountability for [the transferred] funds.'' 62 FR 27695, 27697, May 21, 1997. To further confuse matters, part 1614 states that ''[i]f any direct or indirect time of staff attorneys or paralegals is to be allocated as a cost to PAI, such costs must be documented by time sheets accounting for the time those employees have spent on PAI activities.'' 45 CFR 1614.7(a)(1).

LSC considered multiple options for creating coherent timekeeping requirements for recipients and subrecipients alike. LSC considered leaving the current language in place and adding language describing the minimum requirements for subrecipient timekeeping. Doing so would allow recipients and subrecipients flexibility to develop timekeeping systems that would ensure accountability for expenditures of LSC funds, while minimizing the administrative burden to the subrecipient. LSC also considered making the part 1635 timekeeping requirements applicable to non-PAI subgrants and the part 1614 timekeeping requirements applicable to PAI subgrants. This option would be consistent with the way in which LSC's regulations direct recipients to document time spent on the recipients' non-PAI and PAI activities, respectively.

LSC ultimately chose to propose a requirement that all subrecipients comply with the part 1635 timekeeping requirements for all LSC-funded subgrant activities. LSC chose this

option for three reasons. First, LSC learned that some recipients have interpreted § 1610.7(b)(2) as not requiring subrecipients to keep time records. This interpretation is incorrect. Section 1610.7(b)(2) clearly states that subrecipients ''are required to maintain records of time spent on each case or matter undertaken'' with LSC funds, although LSC also stated in the preamble to the 1997 final rule for part 1610 that subrecipients did not have ''to keep time in accordance with the Corporation's timekeeping regulation, 45 CFR part 1635.'' 62 FR 27695, 27697, May 21, 1997. Second, LSC's experience overseeing subgrants over the eighteen years since LSC revised § 1610.7 has given LSC reason to believe that clear timekeeping requirements for subgrants will lead to increased accountability for the use of LSC funds by subrecipients. Finally, LSC believes that having three distinct timekeeping requirements creates unnecessary confusion about which requirements apply to which uses of LSC funds. LSC's proposal will make the timekeeping provisions of parts 1627 and 1635 consistent and will reflect the methods that recipients use to document time charged to their LSC grants.

LSC understands that some subrecipients may be small organizations that currently do not have, or may find it difficult to develop, the capacity to maintain timekeeping records that comply with part 1635. For that reason, *LSC specifically seeks comment on the proposal to require all subrecipients to comply with the timekeeping requirements of part 1635.*

§ 1627.5(d) PAI subgrants. LSC proposes to redesignate existing § 1610.7(c) as § 1627.5(d) and to make editorial changes to the paragraph for clarity. LSC also proposes to adopt a new paragraph (d)(2) stating that, with respect to PAI subgrants, all funds that a recipient uses to support the subgrant are deemed to be LSC funds for purposes of the restrictions listed in 45 CFR 1610.2. LSC requires its recipients to expend an amount equal to at least 12.5% of its LSC grant to PAI activities. *See* 45 CFR 1614.1(a). This language gives recipients discretion about whether they spend entirely LSC funds, entirely non-LSC funds, or some combination of the two, on PAI activities. The reason for the proposed paragraph is to put in the regulation the analysis reflected in AO–2009–1004 that activities carried out as part of a recipient's PAI program, regardless of the source of funds, must be consistent with LSC's governing statutes and regulations. *See* Advisory Opinion AO–2009–1004, at 3–4, June 19, 2009.

§ 1627.6 Subgrants to other recipients. LSC proposes to make only non-substantive editorial changes to this section.

§ 1627.7 Recipient policies, procedures, and recordkeeping. LSC proposes to transfer existing § 1627.7, regarding recipient payments to tax-sheltered annuities, retirement accounts, and pensions, to part 1630. LSC proposes this transfer to limit the scope of part 1627 to subgrants and to move the final provision in part 1627 pertaining to the allowability of costs to the part of LSC's regulations governing cost standards. LSC proposes to redesignate existing § 1627.8 as § 1627.7 without revision.

B. Proposed Changes to Part 1610

§ 1610.2 Definitions. LSC proposes to eliminate the term *transfer* and replace it with the term *subgrant,* as defined in § 1627.2(d). LSC intended the current definition of *transfer* to mirror the definition of *subgrant,* but it does not. The slight differences between the two definitions have caused confusion about whether the terms are coextensive. LSC has treated the terms as functionally equivalent since it enacted § 1610.7 in 1997. LSC's proposed change will eliminate ambiguity by combining the two concepts into one term. The proposed change will not affect the current order of definitions in § 1610.2. If this change becomes final, LSC will need to amend § 1610.8(a)(2) to conform with the change.

§ 1610.7 Transfers of LSC funds. As described more fully above, LSC proposes to transfer this section to part 1627 because it governs the application of the LSC Act and FY96 appropriations act restrictions listed in § 1610.2 to a subrecipient's LSC and non-LSC funds. LSC believes that because § 1610.7 effectively applies to subgrants, it should be located in part 1627 with the rest of the subgrant rules. Should this proposed change become final, LSC will need to redesignate existing §§ 1610.8 and 1610.9 to reflect the removal of § 1610.7.

C. Proposed Changes to Part 1630

In the interest of making its regulations easier to use, LSC proposes to limit the scope of part 1627 to provisions applicable to subgrants. Three provisions of part 1627 are not related to subgrants, but instead proscribe the use of LSC funds to pay membership fees or dues (§ 1627.4) or to make contributions to other entities or individuals (§ 1627.5), or allow recipients to make certain benefits contributions on behalf of its employees (§ 1627.7). LSC proposes to transfer these three provisions to part 1630, which establishes LSC's cost standards. LSC proposes to redesignate these provisions as §§ 1630.14–16. LSC does not propose to revise the text of these provisions at this time.

For the reasons stated in the preamble, the Legal Services Corporation proposes to amend 45 CFR chapter XVI as follows:

PART 1610—USE OF NON-LSC FUNDS, TRANSFERS OF LSC FUNDS, PROGRAM INTEGRITY

■ 1. The authority citation for part 1610 continues to read as follows:

Authority: 42 U.S.C. 2996i; Pub. L. 104–208, 110 Stat. 3009; Pub. L. 104–134, 110 Stat. 1321; Pub. L. 111–117; 123 Stat. 3034.

§ 1610.7 [Removed]

■ 2. Remove § 1610.7.

§§ 1610.8 and 1610.9 [Redesignated as §§ 1610.7 and 1610.8]

■ 3. Sections 1610.8 and 1610.9 are redesignated as §§ 1610.7 and 1610.8, respectively.

PART 1630—COST STANDARDS AND PROCEDURES

■ 4. The authority citation for part 1630 continues to read as follows:

Authority: 5 U.S.C. App. 3, 42 U.S.C. 2996e, 2996f, 2996g, 2996h(c)(1); Pub. L. 105–119, 111 Stat. 2440; Pub. L. 104–134, 110 Stat. 1321.

PART 1627—SUBGRANTS AND MEMBERSHIP FEES OR DUES

■ 5. The authority citation for part 1627 is revised to read as follows:

Authority: 42 U.S.C. 2996g(e).

§ 1627.4 [Transferred to Part 1630 and Redesignated as § 1630.14]

■ 6. Section 1627.4 is transferred to part 1630 and redesignated as § 1630.14.

§ 1627.5 [Transferred to Part 1630 and Redesignated as § 1630.15]

■ 7. Section 1627.5 is transferred to part 1630 and redesignated as § 1630.15.

§ 1627.7 [Transferred to Part 1630 and Redesignated as § 1630.16]

■ 8. Section 1627.7 is transferred to part 1630 and redesignated as § 1630.16.

■ 9. Revise part 1627 to read as follows:

PART 1627—SUBGRANTS

Sec.

1627.1 Purpose.
1627.2 Definitions.
1627.3 Characteristics of subgrants.
1627.4 Requirements for all subgrants.

1627.5 Applicability of restrictions, timekeeping, and recipient priorities; private attorney involvement subgrants.
1627.6 Transfers to other recipients.
1627.7 Recipient policies, procedures and recordkeeping.

Authority: 42 U.S.C. 2996g(e).

§ 1627.1 Purpose.

The purpose of this part is to establish the requirements for subgrants of LSC funds from recipients to third parties to assist in the recipient's provision of legal assistance to eligible clients.

§ 1627.2 Definitions.

(a) *Private attorney* has the meaning given that term in 45 CFR 1614.3(i).

(b) *Programmatic* means activities or functions carried out to provide legal assistance, as defined in § 1002 of the LSC Act, 42 U.S.C. 2996a(5). Programmatic activities do not include the provision of goods or services by vendors or consultants in the normal course of business that the recipient would not be expected to provide itself.

(c) *Recipient* as used in this part means any recipient as defined in section 1002(6) of the Act *and* any grantee or contractor receiving funds from LSC under section 1006(a)(1)(B) of the Act.

(d)(1) *Subgrant* means an award of LSC funds provided by a recipient to a subrecipient for the subrecipient to carry out part of the recipient's programmatic activities.

(2) Except for judicare arrangements and contracts with private attorneys for the direct delivery of legal assistance under 45 CFR part 1614 that exceed $25,000, *subgrant* does not include activities that are covered by a fee-for-service arrangement.

Subrecipient means any entity receiving a subgrant. A single entity may be a subrecipient with respect to some activities it conducts for a recipient while not being a subrecipient with respect to other activities it conducts for a recipient.

§ 1627.3 Characteristics of subgrants.

(a) In determining whether an agreement between a recipient and another entity should be considered a subgrant or a procurement contract, the substance of the relationship is more important than the form of the agreement. All of the characteristics listed below may not be present in all cases, and the recipient must use judgment in classifying each agreement as a subgrant or a procurement contract.

(b) An award from a recipient to another entity will be considered a subgrant when the entity:

(1) Determines who is eligible to receive legal assistance under the recipient's LSC grant;

(2) Has its performance measured in relation to whether programmatic objectives of the LSC grant were met;

(3) Has responsibility for programmatic decisionmaking;

(4) Is responsible for adherence to applicable LSC program requirements specified in the LSC grant award; and

(5) In accordance with its agreement, uses the LSC funds to carry out a program for a public purpose specified in LSC's governing statutes and regulations, as opposed to providing goods or services for the benefit of the recipient.

(c) Any award to a third party that is determined to be a subgrant based on an analysis of these factors must be supported using LSC funds. Recipients may not use goods and services paid for in whole or in part with LSC funds as payment for a subgrant.

§ 1627.4 Requirements for all subgrants.

(a) *Corporation approval of subgrants.* Recipients must submit all applications for subgrants to LSC in writing for prior written approval.

(1) *Basic Field Grants.* (i) Recipients should submit applications for subgrants of Basic Field Grant funds along with the recipient's proposal for funding, including applications for renewals of funding. LSC will publish the requirements concerning the format and contents of the application annually in the **Federal Register** and on LSC's Web site.

(ii) LSC will notify a recipient of its decision to approve, disapprove, or suggest modifications to an application for subgrant approval prior to, or at the same time as LSC provides notice of its decision with respect to the applicant's proposal for Basic Field Grant funding.

(2) *Special grants.* (i) Recipients of special grants (*e.g.,* Technology Initiative Grants, Pro Bono Innovation Fund grants, disaster assistance grants), should submit their subgrant applications following notification of approval of special grant funds. LSC will publish the requirements concerning the format and contents of the application annually in the **Federal Register** and on LSC's Web site.

(ii) A subgrant application must be submitted at least 45 days in advance of its proposed effective date. LSC will notify the recipient in writing of its decision to approve, disapprove, or suggest modifications to the subgrant. A subgrant that is disapproved or to which LSC has suggested modifications may be resubmitted for approval.

(3) *Mid-year subgrant requests.* A recipient may apply for prior approval of a subgrant outside of the periods prescribed in paragraphs (a)(1) and (a)(2) of this section as needed. LSC will publish the requirements concerning the format and contents of the application annually in the **Federal Register** and on LSC's Web site. LSC will follow the time periods prescribed in paragraph (a)(2)(ii) of this section to consider and notify a recipient of its decision to approve, disapprove, or suggest modifications to the subgrant.

(4) Any subgrant not approved according to paragraphs (a)(1)–(3) of this section will be subject to disallowance and recovery of all funds expended under the subgrant.

(5) A recipient must obtain LSC approval of any substantial change in the scope or objectives of a subgrant or an increase or decrease in the funding amount of more than 10%. Minor changes in the scope or objectives or changes in funding of less than 10% do not require prior approval, but the recipient must notify LSC of such changes in writing.

(b) *Duration of subgrant.* (1) For Basic Field grants, a subgrant may not be for a period longer than one year. All funds unexpended at the end of the subgrant period will be considered part of the recipient's available LSC funds.

(2) For special grants (e.g., Pro Bono Innovation Fund grants, Technology Initiative Grants, disaster assistance grants), a subgrant may not be for a period longer than the term of the grant. Absent written approval from LSC, all unexpended funds must be returned to LSC at the end of the subgrant period.

(3) All subgrants must contain provisions for their orderly termination in the event that the recipient is no longer an LSC recipient, and for suspension of activities if the recipient's funding is suspended.

(c) *Recipient responsibilities.* (1) Recipients must ensure that subrecipients comply with LSC's financial and audit provisions.

(2) The recipient must ensure that the subrecipient properly spends, accounts for, and audits funds received through the subgrant.

(3) The recipient must repay LSC for any disallowed expenditures by a subrecipient. Repayment is required regardless of whether the recipient is able to recover such expenditures from the subrecipient.

(d) *Accounting of funds.* Any LSC funds paid by a recipient to a subrecipient through a subgrant are subject to the audit and financial requirements of the Audit Guide for Recipients and Auditors and the

Accounting Guide for LSC Recipients. Subgranted funds may be separately disclosed and accounted for, and reported upon in the audited financial statements of a recipient; or such funds may be included in a separate audit report of the subrecipient. The relationship between the recipient and subrecipient will determine the proper method of financial reporting following generally accepted accounting principles.

(e) *Oversight.* To ensure subrecipient compliance with the LSC Act, LSC's appropriations statutes, Congressional restrictions having the force of law, and LSC's regulations, guidelines, and instructions, agreements between a recipient and a subrecipient must provide the same oversight rights for LSC with respect to subrecipients as apply to subrecipients.

§ 1627.5 Applicability of restrictions, timekeeping, and recipient priorities; private attorney involvement subgrants.

(a) *Applicability of restrictions.* The prohibitions and requirements set forth in 45 CFR part 1610 apply both to the subgrant and to the subrecipient's non-LSC funds, except as modified by paragraphs (b), (c), and (d) of this section.

(b) Priorities. Subrecipients must either:

(1) Use the subgrant consistent with the recipient's priorities; or

(2) Establish their own priorities for the use of the subgrant consistent with 45 CFR part 1620;

(c) *Timekeeping.* Subrecipients must comply with 45 CFR part 1635 regarding timekeeping for all LSC-funded subgrant activities.

(d) *PAI subgrant.* (1) The prohibitions and requirements set forth in 45 CFR part 1610 apply *only* to the subgrant, when the subrecipient is a bar association, *pro bono* program, private attorney or law firm, or other entity that receives a subgrant for the sole purpose of funding private attorney involvement activities (PAI) pursuant to 45 CFR part 1614.

(2) Any funds used by a recipient as payment for a PAI subgrant are deemed LSC funds for purposes of this paragraph.

§ 1627.6 Subgrants to other recipients.

(a) The requirements of § 1627.4 apply to all subgrants from one recipient to another recipient.

(b) The subrecipient must audit any funds provided by the recipient under a subgrant in its annual audit and supply a copy of this audit to the recipient. The recipient must either submit the relevant part of this audit with its next annual audit or, if an audit has been recently submitted, submit it as an addendum to that recently submitted audit.

(c) In addition to the provisions of § 1627.4(c)(3), LSC may hold the recipient responsible for any disallowed expenditures of subgrant funds. Thus, LSC may recover all of the disallowed costs from either the recipient or the subrecipient or may divide the recovery between the two. LSC's total recovery may not exceed the amount of expenditures disallowed.

(d) Funds received by a recipient from other recipients in the form of fees and dues shall be accounted for and included in the annual audit of the recipient receiving these funds as LSC funds.

§ 1627.7 Recipient policies, procedures and recordkeeping.

Each recipient must adopt written policies and procedures to guide its staff in complying with this part and must maintain records sufficient to document the recipient's compliance with this part.

PART 1630—COST STANDARDS AND PROCEDURES

■ 10. In newly transferred and redesignated § 1630.14, revise the section heading to read as follows:

§ 1630.14 Membership fees or dues.

■ 11. In newly transferred and redesignated § 1630.15, revise the section heading to read as follows:

§ 1630.15 Contributions.

■ 12. In newly transferred and redesignated § 1630.16, revise the section heading to read as follows:

§ 1630.16 Tax sheltered annuities, retirement accounts, and pensions.

Dated: April 14, 2015.

Stefanie K. Davis,

Assistant General Counsel.

[FR Doc. 2015–08951 Filed 4–17–15; 8:45 am]

BILLING CODE 7050–01–P

LEGAL SERVICES CORPORATION

45 CFR Part 1628

Recipient Fund Balances

AGENCY: Legal Services Corporation.

ACTION: Notice of proposed rulemaking.

SUMMARY: This proposed rule would revise the Legal Services Corporation (LSC or Corporation) regulation on recipient fund balances to provide the Corporation with more discretion to grant a recipient's request for a waiver to retain a fund balance in excess of 25% of its annual LSC support. This proposed rule would also provide that recipients that face extraordinary and compelling circumstances may submit a waiver request to retain a fund balance in excess of 25% of their annual LSC support prior to the submission of their annual audited financial statements.

DATE: Comments must be submitted by May 20, 2015.

ADDRESSES: You may submit comments by any of the following methods:

- *Federal eRulemaking Portal: http://www.regulations.gov.* Follow the instructions for submitting comments.
- *Email: 1628rulemaking@lsc.gov.* Include ''Comments on Revisions to Part 1628'' in the subject line of the message.
- *Fax:* (202) 337–6519, ATTN: Part 1628 Rulemaking.
- *Mail:* Stefanie K. Davis, Assistant General Counsel, Legal Services Corporation, 3333 K Street NW., Washington, DC 20007, ATTN: Part 1628 Rulemaking.
- *Hand Delivery/Courier:* Stefanie K. Davis, Assistant General Counsel, Legal Services Corporation, 3333 K Street NW., Washington, DC 20007, ATTN: Part 1628 Rulemaking.

Instructions: Electronic submissions are preferred via email with attachments in Acrobat PDF format. Written comments sent to any other address or received after the end of the comment period may not be considered by LSC.

FOR FURTHER INFORMATION CONTACT: Stefanie K. Davis, Assistant General Counsel, Legal Services Corporation, 3333 K Street NW., Washington, DC 20007; (202) 295–1563 (phone), (202) 337–6519 (fax), or *sdavis@lsc.gov.*

SUPPLEMENTARY INFORMATION:

I. Regulatory Background

LSC issued its first instruction on recipient fund balances in 1983 to implement what is now the Corporation's longstanding objective of ensuring the timely expenditure of LSC funds for the effective and economical provision of high quality legal assistance to eligible clients. 48 FR 560, 561, Jan. 5, 1983. Later that year, LSC published a redrafted version titled Instruction 83–4, Recipient Fund Balances (''Instruction''). 48 FR 49710, 49711, Oct. 27, 1983. The Instruction limited the ability of recipients to carry over LSC funds that remained unused at the end of the fiscal year. *Id.* Specifically, the Instruction provided that, in the absence of a waiver granted by the Corporation, a recipient's end-of-year fund balance in excess of 10% of its total annual LSC support must be repaid to LSC. *Id.* The Instruction also

prohibited a recipient from ever retaining a fund balance in excess of 25% of its annual support, thereby limiting the Corporation's waiver granting authority to fund balance amounts of 25% or less of a recipient's annual support. *Id.*

In 1984, LSC substantially adopted the Instruction in a regulation published at 45 CFR part 1628. 49 FR 21331, May 21, 1984. Part 1628 remained unchanged until 2000, when LSC promulgated revisions in response to public comments and staff advice indicating that the rule was ''more strict'' than the fund balance requirements of most federal agencies. 65 FR 66637, 66638, Nov. 7, 2000. The revisions provided the Corporation with more discretion to grant a recipient's request for a waiver to retain a fund balance of up to 25% of its annual support. *Id.* at 66637. In addition, for the first time, the rule authorized the Corporation to exercise its discretion to grant a recipient's request for a waiver to retain a fund balance in excess of 25% of its annual support. *Id.* The Corporation reasoned that, by allowing for waivers to retain that amount, ''[t]he recipient can better plan and find the best use for the funds, rather than being forced into a hasty expenditure simply to avoid the limitation on the carryover of fund balances.'' *Id.* at 66640. The rule, however, limited the situations justifying a recipient's request to retain more than 25% of its annual support to ''three specific circumstances when extraordinary and compelling reasons exist for such a waiver,'' currently listed in § 1628.3(c). *Id.* at 66638. These extraordinary and compelling circumstances were restricted to the following situations when a recipient received income derived from its use of LSC funds: ''(1) An insurance reimbursement; (2) the sale of real property; and (3) the receipt of monies from a lawsuit in which the recipient was a party.'' *Id.* at 66639. Although the Operations and Regulations Committee (Committee) ''considered using a standard of 'extraordinary and compelling' for these waivers with the three specific circumstances discussed as examples,'' it ultimately decided ''that more guidance was required to avoid erosion of the standard,'' and the three circumstances became exclusive limitations, not mere examples. *Id.* at 66640. The LSC Board of Directors (Board) adopted the revisions to part 1628 on November 20, 1999, and the revised rule has been in effect since December 7, 2000. *Id.* at 66637–38.

On April 12, 2015, the Committee voted to recommend that the Board publish this NPRM in the **Federal Register** for notice and comment. On April 14, 2015, the Board accepted the Committee's recommendation and voted to approve publication of this NPRM.

II. LSC Consideration of Potential Revisions to Part 1628

During the nearly 15-year period since part 1628 was last revised, LSC grantees have experienced various unexpected occurrences outside of those listed in § 1628.3(c) that caused them to accrue fund balances in excess of 25% of their annual support. These occurrences have included an end-of-year transfer of assets from a former grantee to a current grantee, a natural disaster that resulted in a significant infusion of use-or-lose disaster relief funds from non-LSC sources, and receipt of a large attorneys' fees award in an LSC-funded case near the end of the fiscal year. In each of these situations, LSC determined that part 1628 currently prevents some recipients with legitimate reasons for having fund balances exceeding 25% of their annual LSC support from seeking and obtaining needed waivers.

On January 22, 2015, LSC staff presented the Committee with a proposal to consider revising part 1628 to address the difficulties faced by recipients that encounter these types of occurrences, yet are unable to justify a waiver request to retain a balance in excess of 25% of their annual support under the current standards. The Committee authorized LSC management to add the matter to the Committee's rulemaking agenda so that it may address this issue. In addition, the Committee requested that LSC consider whether the rule's 10% and 25% caps on fund balance carryovers are still appropriate in light of the most recently available data on recipient waiver requests.

LSC first considered revising part 1628 to allow recipients to request, and the Corporation to grant, waivers to retain fund balances in excess of 25% of annual support in extraordinary and compelling circumstances not covered by the current rule. Current § 1628.3(c) is limited to three circumstances where a recipient receives an infusion of derivative income, or income derived from the recipient's use of LSC funds. As discussed above, however, recent situations have included the sudden infusion of non-derivative, use-or-lose income under other circumstances that significantly disrupted grantee expenditure plans. As a result, LSC staff determined that the list of extraordinary and compelling circumstances in § 1628.3(c) should be illustrative, rather than limited, so that recipients that encounter truly unforeseeable scenarios can avoid having to make the difficult choice between returning large portions of unused balances and hurriedly spending funds before the end of the fiscal year. LSC staff similarly determined that such circumstances should include situations where a grantee is incapable of expending its existing LSC funds as originally planned due to a natural disaster or other catastrophic event, as opposed to only situations where new income is received. Therefore, the Corporation proposes providing an illustrative list of extraordinary and compelling circumstances justifying waivers to retain a fund balance in excess of 25% of a recipient's annual support. LSC believes that this proposed revision will allow grantees to devise more organized and efficient spending plans when faced with unexpected events that are not listed in current § 1628.3(c). Providing recipients with sufficient time to plan for the expenditure of unused funds in excess of 25% of their annual support would also advance the Corporation's policy of ensuring effective and economical provision of high quality legal assistance to eligible clients.

LSC next considered revising part 1628 to provide that a recipient may submit a waiver request prior to submitting its annual audited financial statements. Section 1628.4(a) currently provides that a recipient may request a waiver within 30 days of the submission of its annual audited financial statements. The preamble to the 2000 rule, however, states that ''[t]his rule does not preclude the recipient's request for a Corporation action on a waiver prior to the close of the fiscal year, it simply does not require the Corporation to provide for advance approval.'' 65 FR 66637, 66640, Nov. 7, 2000. LSC staff determined that incorporating the current preamble language on permitting waiver requests prior to the close of the fiscal year into the regulatory text of part 1628 would benefit grantees by allowing them to seek assurance that they will not have to return or spend a large portion of excess LSC funds by the end of the fiscal year, thereby enabling them to plan for the following fiscal year with greater certainty.

LSC staff also found that limiting early approvals to requests for waivers to retain balances in excess of 25% of annual support would be proper in light of the unique and significant burdens on financial planning faced by recipients that experience extraordinary and compelling circumstances. In addition, because a recipient's estimate of the fund balance it anticipates accruing by the end of the fiscal year may end up

being higher or lower than the recipient's actual fund balance at the time it submits its audited financial statements, LSC staff determined that recipients that receive approval of a waiver request prior to submitting their audited financial statements must submit updated information consistent with the requirements of § 1628.4(a) after the submission of their audited financial statements. Accordingly, an advance approval would be, in effect, an approval of the reasons for a waiver and of the proposed amount to be retained, but the recipient must later provide confirmation of the actual amount of excess funds it has accrued. LSC therefore proposes revising the rule to provide that recipients that face extraordinary and compelling circumstances may submit a waiver request to retain a fund balance in excess of 25% of their annual support prior to the submission of their annual audited financial statements, and that the Corporation may, in its discretion, grant approval of such requests pending confirmation of the actual amount to be retained once the audited financial statements are finalized.

The Corporation also considered revising part 1628 to require LSC management to provide notice to the Board of any decision to grant a waiver in excess of 25% of a recipient's annual support. LSC is retaining the ''extraordinary and compelling circumstances'' standard for granting such waivers, and anticipates that recipients will continue to seek such waivers only in circumstances where they experience extreme events that prevent them from expending more than 25% of their annual LSC support. Furthermore, the granting of LSC funding and exercising discretion with regard to carryover, suspension or termination of such funding has been and should remain a management, not a Board, function. The Corporation will continue to exercise its discretion with the same good faith and fidelity to the objective of ensuring the timely expenditure of LSC funds as it has done since part 1628 was last revised in 2000. Therefore, LSC proposes to retain its current policy of leaving discretion to grant waivers to retain excess recipient fund balances with LSC management.

Finally, pursuant to the Committee's request, LSC considered whether the rule's 10% and 25% caps on fund balance carryover amounts should be adjusted in accordance with recent trends in waiver requests. LSC's Office of Compliance and Enforcement (OCE) provided LSC staff with statistics on all waiver requests that have been submitted to the Corporation over the last six years. After analyzing the data, LSC decided as a policy matter that the respective percentage caps are set at the appropriate levels. According to the statistics, the average annual number of waiver requests to retain a fund balance that exceeds 10% of a recipient's LSC support is easily manageable by OCE. Furthermore, waiver requests to retain a balance in excess of 25% of LSC support are exceedingly rare, and the Corporation does not expect a significantly greater number of such requests if the proposed revisions to part 1628 are adopted. LSC believes that the current percentage caps on carryover amounts are necessary to ensure that recipients are spending their grants on providing legal services, while offering an appropriate amount of flexibility to retain unused fund balances. The Corporation therefore proposes retaining the current percentage cap amounts, but requests comments on whether to change them.

III. Discussion of the Proposed Changes

§ 1628.3 Policy

LSC proposes to revise § 1628.3(c) to eliminate the language limiting the extraordinary and compelling circumstances in which LSC may grant a recipient's request for a waiver to retain a fund balance that exceeds 25% of its annual LSC support. Whereas existing § 1628.3(c) is limited to three circumstances where a recipient receives a sudden infusion of income, the proposed section expands the types of situations that the Corporation, in its discretion, may consider to be extraordinary and compelling circumstances. The proposed section adds the example of a natural disaster to illustrate a situation where a recipient would be unable to expend its current LSC grant for reasons other than the receipt of new funds. The proposed section also adds the example of ''a payment from an LSC-funded lawsuit, regardless of whether the recipient was a party to the lawsuit.'' This revision makes clear that a recipient may request a waiver to retain a fund balance in excess of 25% of its annual support when it receives an award as the result of a court decision in an LSC-funded case, even if the recipient was not named as a party to the action.

LSC also proposes to make a minor revision to § 1628.3(d) to reflect the proposed redesignation of certain paragraphs in § 1628.4.

§ 1628.4 Procedures

LSC proposes to add a new § 1628.4(d) to expressly allow recipients that face extraordinary and compelling circumstances to submit a waiver request to retain a fund balance in excess of 25% of their annual support prior to the submission of their annual audited financial statements. This addition will require existing § 1628.4(d), (e), (f), and (g) to be redesignated to § 1628.4(e), (f), (g), and (h).

The proposed new § 1628.4(d) will list the written requirements for a waiver request to retain a fund balance in excess of 25% of annual support. These requirements vary from the ones listed in § 1628.4(a), which apply only to requests made within 30 days after the submission of a recipient's annual audited financial statements. There are two reasons for the variation. First, because the annual audited financial statement of a recipient requesting an early waiver approval would not yet be available to the Corporation, recipients can provide only an estimate of the fund balance they anticipate to accrue by the time their statements are submitted. Second, because a recipient may submit a waiver request either before or after the close of the fiscal year, the proposed section will require recipients to provide a ''plan for disposing of the excess fund balance,'' as opposed to a plan for the ''current fiscal year'' as required by § 1628.4(a). Additionally, proposed § 1628.4(d) requires recipients receiving approval to later submit updated information consistent with the requirements of paragraph (a) to confirm the actual fund balance amount to be retained by the recipient, as determined by reference to its annual audited financial statements.

Finally, LSC proposes to revise the introductory text of paragraph (a), as well as paragraphs (a)(2) and (3), for clarity and readability.

List of Subjects in 45 CFR Part 1628

Administrative practice and procedure, Grant programs—law, Legal services.

For the reasons set forth in the preamble, the Legal Services Corporation proposes to revise 45 CFR part 1628 as follows:

PART 1628—RECIPIENT FUND BALANCES

■ 1. The authority citation for part 1628 is revised to read as follows:

Authority: 42 U.S.C. 2996g(e).

■ 2. Revise paragraphs (c) and (d) of § 1628.3 to read as follows:

§ 1628.3 Policy

* * * * *

(c) Recipients may request a waiver to retain a fund balance in excess of 25%

of a recipient's LSC support only for extraordinary and compelling circumstances, such as when a natural disaster or other catastrophic event prevents the timely expenditure of LSC funds, or when the recipient receives an insurance reimbursement, the proceeds from the sale of real property, a payment from a lawsuit in which the recipient was a party, or a payment from an LSC-funded lawsuit, regardless of whether the recipient was a party to the lawsuit.

(d) A waiver pursuant to paragraph (b) or (c) of this section may be granted at the discretion of the Corporation pursuant to the criteria set out in § 1628.4(e).

* * * * *

■ 3. Amend § 1628.4 as follows:

■ a. Revise paragraph (a) introductory text and paragraphs (a)(2) and (3);

■ b. Redesignate paragraphs (d) through (g) as paragraphs (e) through (h); and

■ c. Add new paragraph (d).

The revisions and additions read as follows:

§ 1628.4 Procedures

(a) A recipient may request a waiver of the 10% ceiling on LSC fund balances within 30 days after the submission to LSC of its annual audited financial statements. The request shall specify:

* * * * *

(2) The reason(s) for the excess fund balance;

(3) The recipient's plan for disposing of the excess fund balance during the current fiscal year;\

* * * * *

(d) A recipient may submit a waiver request to retain a fund balance in excess of 25% of its LSC support prior to the submission of its audited financial statements. The Corporation may, at its discretion, provide approval in writing. The request shall specify the extraordinary and compelling circumstances justifying the fund balance in excess of 25%; the estimated fund balance that the recipient anticipates it will accrue by the time of the submission of its audited financial statements; and the recipient's plan for disposing of the excess fund balance. Upon the submission of its annual audited financial statements, the recipient must submit updated information consistent with the requirements of paragraph (a) of this section to confirm the actual fund balance to be retained.

* * * * *

Dated: April 14, 2015.

Stefanie K. Davis,

Assistant General Counsel.

[FR Doc. 2015–08948 Filed 4–17–15; 8:45 am]

BILLING CODE 7050–01–P

Notices

Federal Register
Vol. 80, No. 75
Monday, April 20, 2015

This section of the FEDERAL REGISTER contains documents other than rules or proposed rules that are applicable to the public. Notices of hearings and investigations, committee meetings, agency decisions and rulings, delegations of authority, filing of petitions and applications and agency statements of organization and functions are examples of documents appearing in this section.

CENTRAL INTELLIGENCE AGENCY

Notice of Decennial Review of Operational Files Designations

AGENCY: Central Intelligence Agency.

Authority: 50 U.S.C 3141

SUMMARY: The Central Intelligence Agency (CIA or Agency) is soliciting comments regarding the historical value of, or other public interest in, the CIA files designated by the Director of the Central Intelligence Agency (DCIA) pursuant to the CIA Information Act of 1984.

DATES: Comments must be received by 1 May 2015.

ADDRESSES: Submit comments in writing to Joseph W. Lambert, Director, Information Management Services, Central Intelligence Agency, Washington, DC 20505, or by fax to (703) 613–3020.

FOR FURTHER INFORMATION CONTACT: Joseph W. Lambert, Director, Information Management Services, Central Intelligence Agency, telephone 703–613–1379.

Text

The CIA Information Act of 1984, codified in section 3141 of title 50 of the United States Code, authorizes the DCIA to exempt operational files of the CIA from the publication, disclosure, search, and review provisions of the Freedom of Information Act. The statute defines operational files as:

1. Files of the National Clandestine Service that document the conduct of foreign intelligence or counterintelligence operations or intelligence or security liaison arrangements or information exchanges with foreign governments or their intelligence or security services;

2. Files of the Directorate of Science and Technology that document the means by which foreign intelligence or counterintelligence is collected through scientific and technical systems; and

3. Files of the Office of Security that document investigations conducted to determine the suitability of potential foreign intelligence or counterintelligence sources; except that files that are the sole repository of disseminated intelligence are not operational files.

The CIA Information Act of 1984 requires that, not less than once every ten years, the DCIA shall review the exemptions in force to determine whether such exemptions may be removed from any category of exempted files or any portion thereof. The last review was completed in April 2005. The following represents a summary of the general categories of operational files that have been maintained within the National Clandestine Service, the Directorate of Science and Technology, and the Office of Security since the first decennial review:

1. Files of the National Clandestine Service that document the intelligence sources and methods associated with various operational and foreign liaison activities, that document the conduct and management of various operational and foreign liaison activities, and that document the assessment of the viability of potential operational and foreign liaison activities and potential intelligence sources and methods;

2. Files of the Directorate of Science and Technology that document the use of scientific and technical systems in the conduct of and in support of various operational and intelligence collection activities;

3. Files of the Office of Security that document various aspects of the investigations conducted to determine the suitability of potential foreign intelligence or counterintelligence sources proposed for use in various operational activities.

The CIA is in the process of conducting the 2015 decennial review of its operational files to determine whether any of the previously designated files, or portions thereof, can be removed from any of the specified categories of exempted files. The CIA Information Act of 1984 requires that the decennial review ''include consideration of the historical value or other public interest in the subject matter of the particular category of files or portions thereof and the potential for declassifying a significant part of the information contained therein.'' In accordance with this requirement, the CIA hereby solicits comments for the DCIA's consideration during the decennial review of the CIA's operational files regarding the historical value of, or other public interest in, the subject matter of these particular categories of files or portions thereof described above and the relationship of that historical value or other public interest to the removal of previously designated files or any portions thereof from such a classification.

Dated: April 15, 2015.

Joseph W. Lambert,

Director, Information Management Services, CIA.

[FR Doc. 2015–09022 Filed 4–17–15; 8:45 am]

BILLING CODE 6310–02–P

DEPARTMENT OF COMMERCE

Economic Development Administration

Proposed Information Collection; Comment Request; Application for Investment Assistance

AGENCY: Economic Development Administration.

ACTION: Notice.

SUMMARY: The Department of Commerce, as part of its continuing effort to reduce paperwork and respondent burden, invites the general public and other Federal agencies to take this opportunity to comment on proposed and/or continuing information collections, as required by the Paperwork Reduction Act of 1995 (44 U.S.C. Chapter 35). The purpose of this notice is to allow for 60 days of public comment. Comments submitted in response to this notice will be summarized and/or included in the request for Office of Management and Budget (OMB) approval of this information collection; they also will become a matter of public record.

DATES: Written comments must be submitted on or before June 19, 2015.

ADDRESSES: Direct all written comments to Jennifer Jessup, Departmental Paperwork Clearance Officer, Department of Commerce, Room 6616, 14th and Constitution Avenue NW., Washington, DC 20230 (or via email at *JJessup@ doc.gov*).

FOR FURTHER INFORMATION CONTACT: Requests for additional information or

copies of the information collection instrument and instructions should be directed to Kerstin Millius, Senior Program Analyst, Performance and National Programs Division, Room 71030, Economic Development Administration, 14th and Constitution Avenue NW., Washington, DC 20230, (or via email at *kmillius@ eda.gov*).

SUPPLEMENTARY INFORMATION:

I. Abstract

The mission of the Economic Development Administration (EDA) is to lead the Federal economic agenda by promoting innovation and competitiveness, preparing American regions for growth and success in the worldwide economy. In order to effectively administer and monitor its economic development assistance programs, EDA collects certain information from applications for, and recipients of, EDA investment assistance. This 60-day **Federal Register** Notice covers changes to EDA's existing Application for Investment Assistance.

EDA is currently undergoing a comprehensive review and improvement effort for its grants cycle process. Using staff input and results from EDA's 2014 Customer Service survey, EDA has reimagined its grants application process from the ground up, making significant improvements for both stakeholders and staff. As part of this process, EDA is making changes to its forms to address the following concerns:

- Confusion among applicants regarding which sections of the ED–900 needed to be completed for the program they were applying for;
- Undue burden on applicants to complete the application form for projects that were not likely to be funded;
- Outdated links to external sources;
- Unnecessary waste of paper and ink when a complete form was printed, since sections that may not be required for a particular program were printed along with those that were required.

In order to address these concerns, EDA is dividing the ED–900 into a suite of smaller forms that can be mixed and matched to fit the needs of different program solicitations on Grants.gov. This will ensure that applicants only see the information they are required to provide in order to apply and eliminate the unnecessary waste of paper and ink resources. In addition, EDA has developed a new ''Proposal'' form, which will allow applicants to submit significantly less information to EDA in order to get a better understanding of the potential competitiveness of their application. The following is a crosswalk of the currently approved ED–900 with the proposed new forms:

Proposed new form	Content of the form	Relevant sections of the existing ED–900
ED–900—General Application for EDA Programs.	Questions that pertain to all EDA programs, including Project Narrative questions (geographic coverage, scope of work, potential impacts), budget narrative, and eligibility questions.	Sections A, B, C, D, E, K.
ED–900A—Additional EDA Assurances for Construction Or Non-Construction Investments.	Specific assurances that applicants need to provide in order to apply for EDA funding.	Exhibits B, C, and D.
ED–900B—Beneficiary Information Form	Specific assurances required from beneficiaries of EDA funding, including documentation of estimated jobs and private investment resulting from the EDA project.	Exhibit A.
ED–900C—EDA Application Supplement for Construction Programs.	Information required from construction applicants as part of a full application after the proposal has been approved.	Section M, except questions included in the ED–900P Proposal Form.
ED–900D—Requirements for Design and Engineering Assistance.	Information required from design/engineering applicants as part of a full application after the proposal has been approved.	Section N.
ED–900E—Calculation of Estimated Relocation and Acquisition Expenses.	Provides detailed breakdown of the estimated total for line item 3 (''relocation expenses and payments'') of Form SF–424C, 'Budget Information'—Construction Programs to comply with the Uniform Relocation Act.	Exhibit E.
ED–900F—Supplement for Revolving Loan Fund Applications.	Information required to evaluate the competitiveness of a revolving loan fund application.	Section L.
ED–900P—Proposal for EDA Assistance	New general questions to allow applicants to give a broad overview of their proposed project/scope of work.	For all applicants, new questions not contained in the ED–900. For construction applicants only, portions of section M not covered in the ED–900C Construction Form.
Environmental Narrative Requirements and Appendix A: Applicant Certification Clause.	Template to guide the applicant through the development of an environmental narrative that satisfies the requirements of the National Environmental Policy Act (NEPA).	Referenced in section M.8, with separate documents posted on EDA's website.

The new forms are required to apply for EDA investment assistance under EDA's Public Works, Economic Adjustment, Technical Assistance, Research, and Planning programs. This collection of information is required to ensure that applications meet the requirements for EDA assistance set out in EDA's regulations at 13 CFR Chapter III.

II. Method of Collection

Paper and electronic submissions.

III. Data

OMB Control Number: 0610–0094.

Form Number(s): ED–900, ED–900A, ED–900B, ED–900C, ED–900D, ED–900E, ED–900F, ED–900P.

Type of Review: Regular submission; Revision of a currently approved collection.

Affected Public: Not-for-profit institutions; Federal government; State, local, or tribal government; Business or other for-profit organizations.

Estimated Number of Respondents: 1672.

Estimated Time Per Response: 13 hours, 28 minutes

Estimated Total Annual Burden Hours: 22,512.

Estimated Total Annual Cost to Public: $0.

IV. Request for Comments

Comments are invited on: (a) Whether the proposed collection of information is necessary for the proper performance of the functions of the agency, including whether the information shall have practical utility; (b) the accuracy of the agency's estimate of the burden (including hours and cost) of the proposed collection of information; (c) ways to enhance the quality, utility, and clarity of the information to be collected; and (d) ways to minimize the burden of the collection of information on respondents, including through the use of automated collection techniques or other forms of information technology.

Dated: April 16, 2015.

Glenna Mickelson,

Management Analyst, Office of the Chief Information Officer.

[FR Doc. 2015–09181 Filed 4–20–15; 8:45 am]

BILLING CODE 3510–34–P

DEPARTMENT OF COMMERCE

International Trade Administration

[C–570–021]

Melamine From the People's Republic of China: Preliminary Affirmative Countervailing Duty Determination, and Alignment of Final Determination With Final Antidumping Duty Determination

AGENCY: Enforcement and Compliance, International Trade Administration, Department of Commerce.

SUMMARY: The Department of Commerce (''Department'') preliminarily determines that countervailable subsidies are being provided to producers/exporters of melamine from the People's Republic of China (''PRC''). The period of investigation is January 1, 2013, through December 31, 2013. Interested parties are invited to comment on this preliminary determination.

DATES: *Effective Date:* April 20, 2015.

FOR FURTHER INFORMATION CONTACT: Eve Wang or Andrew Medley, AD/CVD Operations, Enforcement and Compliance, International Trade Administration, U.S. Department of Commerce, 14th Street and Constitution Avenue NW., Washington, DC 20230; telephone: (202) 482–6231 and (202) 482–4987, respectively.

SUPPLEMENTARY INFORMATION:

Alignment of Final Countervailing Duty Determination With Final Antidumping Duty Determination

The Department published its notice of initiation of this countervailing duty (''CVD'') investigation on December 9, 2014; on the same day, the Department published its notice of initiation of an antidumping duty (''AD'') investigation of melamine from the PRC.[1] The CVD and AD investigations cover the same merchandise. On April 1, 2015, in accordance with section 705(a)(1) of the Tariff Act of 1930, as amended (''the Act''), Cornerstone Chemical Company (''Petitioner'') requested alignment of the final CVD determination with the final AD determination of melamine from the PRC.[2] Therefore, in accordance with section 705(a)(1) of the Act and 19 CFR 351.210(b)(4), we are aligning the final CVD determination with the final AD determination. Consequently, the final CVD determination will be issued on the same date as the final AD determination, which is currently scheduled to be issued no later than August 24, 2015, unless postponed.

Scope of the Investigation

The product covered by this investigation is melamine from the PRC. For a complete description of the scope of the investigation, *see* Appendix 1 to this notice.

Methodology

The Department is conducting this CVD investigation in accordance with section 701 of the Act. For a full description of the methodology underlying our preliminary conclusions, *see* the Preliminary Decision Memorandum.[3] The Preliminary Decision Memorandum is a public document and is made available to the public *via* Enforcement and Compliance's Antidumping and Countervailing Duty Centralized Electronic Service System (''ACCESS'').[4] ACCESS is available to registered users at *http://access.trade.gov,* and is available to all parties in the Department's Central Records Unit, located at room 7046 of the main Department of Commerce building. In addition, a complete version of the Preliminary Decision Memorandum can be found at *http://enforcement.trade.gov/frn/.* The signed and the electronic versions of the Preliminary Decision Memorandum are identical in content.

For this preliminary determination, we relied on facts available pursuant to section 776(a) of the Act because the Government of the PRC and the five companies selected for individual examination—*i.e.,* the mandatory respondents: Far-Reaching Chemical Co., Ltd. (''Far-Reaching Chemical''), Zhongyuan Dahua Group Co., Ltd. (''Zhongyuan Dahua''), Qingdao Unichem International Trade Co., Ltd. (''Qingdao Unichem''), M and A Chemicals Corp China (''M&A Chemicals''), and Shandong Liaherd Chemical Industry Co., Ltd. (''Shandong Liaherd''). failed to provide information requested by the Department and, by refusing to participate as respondents, significantly impeded the investigation.[5] Further, because they failed to cooperate by not acting to the best of their ability to respond to the Department's requests for necessary information, pursuant to section 776(b) of the Act, in selecting from among the facts otherwise available, we have drawn an adverse inference. Specifically, the Department applied an adverse inference to find that the programs on which the Department initiated this investigation and the programs which the Department subsequently included in this investigation pursuant to allegations made by Petitioner,[6] are countervailable. Further, the Department applied an adverse inference in its calculation of the *ad valorem* estimated countervailable subsidy rate for Far-Reaching Chemical,

---

[1] *See Melamine From the People's Republic of China and Trinidad and Tobago: Initiation of Countervailing Duty Investigations,* 79 FR 73030 (December 9, 2014). *See also Melamine From the People's Republic of China and Trinidad and Tobago: Initiation of Less-Than-Fair-Value Investigations,* 79 FR 73037 (December 9, 2014).

[2] *See* Letter from Petitioner entitled ''Melamine From The People's Republic of China And The Republic of Trinidad And Tobago/Request For Alignment,'' dated April 1, 2015.

[3] *See* Memorandum to Paul Piquado, Assistant Secretary for Enforcement and Compliance, From Christian Marsh, Deputy Assistant Secretary for Antidumping and Countervailing Duty Operations, titled ''Decision Memorandum for Preliminary Determination of Countervailing Duty Investigation: Melamine from the People's Republic of China,'' dated concurrently with this notice (''Preliminary Decision Memorandum'').

[4] On November 24, 2014, Enforcement and Compliance changed the name of Enforcement and Compliance's AD and CVD Centralized Electronic Service System (''IA ACCESS'') to AD and CVD Centralized Electronic Service System (''ACCESS''). The Web site location was changed from *http://iaaccess.trade.gov* to *http://access.trade.gov.* The Final Rule changing the references to the Regulations can be found at 79 FR 69046 (November 20, 2014).

[5] *See* sections 776(a)(2)(A) and (C) of the Act.

[6] *See* the Department's memorandum entitled ''Countervailing Duty Investigation on Melamine from the People's Republic of China: January 27, 2015 New Subsidy Allegations,'' dated March 25, 2015.

Zhongyuan Dahua, Qingidau Unichem, M&A Chemicals, and Shandong Liaherd. For further information, *see* ''Use of Facts Otherwise Available and Adverse Inferences'' section in the Preliminary Decision Memorandum.

Preliminary Determination and Suspension of Liquidation

In accordance with section 703(d)(1)(A)(i) of the Act, we calculated estimated subsidy rates for each individually examined producer/exporter of the subject merchandise: Far-Reaching Chemical, Zhongyuan Dahua, Qingidau Unichem, M&A Chemicals, and Shandong Liaherd.

In accordance with sections 703(d)(1)(A)(i) and 705(c)(5)(A) of the Act, for companies not individually examined, we calculated an ''all-others'' rate by weighting the subsidy rates of the individual companies selected as respondents by those companies' exports of the subject merchandise to the United States, not including zero and *de minimis* rates or any rates based solely on facts available. With respect to the all-others rate, section 705(c)(5)(A)(ii) of the Act provides that, if the countervailable subsidy rates established for all exporters and producers individually investigated are determined entirely in accordance with section 776 of the Act, the Department may use any reasonable method to establish an all-others rate for exporters and producers not individuallyexamined. In this case, the countervailable subsidy rate calculated for each of the investigated companies is based entirely on facts available under section 776 of the Act. There is no other information on the record upon which to determine an all-others rate. As a result, we assigned the simple average of the five rates assigned for Far-Reaching Chemical, Zhongyuan Dahua, Qingidau Unichem, M&A Chemicals, and Shandong Liaherd as the all-others rate. This method is consistent with the Department's past practice.[7]

We preliminarily determine the countervailable subsidy rates to be:

Company	Subsidy Rate (percent)
Far-Reaching Chemical Co., Ltd.	147.62
M and A Chemicals Corp China	147.62
Qingdao Unichem International Trade Co., Ltd.	147.62
Shandong Liaherd Chemical Industry Co., Ltd.	150.52
Zhongyuan Dahua Group Co., Ltd.	147.62
All Others	148.20

In accordance with sections 703(d)(1)(B) and (2) of the Act, we are directing U.S. Customs and Border Protection to suspend liquidation of all entries of melamine from the PRC that are entered, or withdrawn from warehouse, for consumption on or after the date of the publication of this notice in the **Federal Register**, and to require a cash deposit for such entries of merchandise in the amounts indicated above.

Disclosure and Public Comment

Because the Department has reached its conclusions on the basis of adverse facts available, the calculations performed in connection with this preliminary determination are not proprietary in nature, and are described in the Preliminary Decision Memorandum. Interested parties may submit case and rebuttal briefs, as well as request a hearing.[8] For a schedule of the deadlines for filing case briefs, rebuttal briefs, and hearing requests, *see* the Preliminary Decision Memorandum.

U.S. International Trade Commission (''ITC'') Notification

In accordance with section 703(f) of the Act, we will notify the ITC of our determination. In addition, we are making available to the ITC all non-privileged and non-proprietary information relating to this investigation. We will allow the ITC access to all privileged and business proprietary information in our files, provided the ITC confirms that it will not disclose such information, either publicly or under an administrative protective order, without the written consent of the Assistant Secretary for Enforcement and Compliance.

In accordance with section 705(b)(2) of the Act, if our final determination is affirmative, the ITC will make its final determination within 45 days after the Department makes its final determination.

This determination is issued and published pursuant to sections 703(f) and 777(i) of the Act and 19 CFR 351.205(c).

Dated: April 13, 2015.

Paul Piquado,

Assistant Secretary for Enforcement and Compliance.

Appendix 1

Scope of the Investigation

The merchandise subject to this investigation is melamine (Chemical Abstracts Service (''CAS'') registry number 108–78–01, molecular formula $C_3H_6N_6$).[9] Melamine is a crystalline powder or granule typically (but not exclusively) used to manufacture melamine formaldehyde resins. All melamine is covered by the scope of this investigation irrespective of purity, particle size, or physical form. Melamine that has been blended with other products is included within this scope when such blends include constituent parts that have been intermingled, but that have not been chemically reacted with each other to produce a different product. For such blends, only the melamine component of the mixture is covered by the scope of this investigation. Melamine that is otherwise subject to this investigation is not excluded when commingled with melamine from sources not subject to this investigation. Only the subject component of such commingled products is covered by the scope of this investigation.

The subject merchandise is provided for in subheading 2933.61.0000 of the Harmonized Tariff Schedule of the United States (''HTSUS''). Although the HTSUS subheading and CAS registry number are provided for convenience and customs purposes, the written description of the scope is dispositive.

Appendix 2

List of Topics Discussed in the Preliminary Decision Memorandum

1. Summary
2. Background
3. Scope Comments
4. Scope of the Investigation
5. Respondent Selection
6. Voluntary Respondent Treatment
7. Injury Test
8. Application of the Countervailing Duty Law to Imports from the PRC
9. Use of Facts Otherwise Available and Adverse Inferences
10. ITC Notification
11. Disclosure and Public Comment
12. Conclusion

[FR Doc. 2015–09004 Filed 4–17–15; 8:45 am]

BILLING CODE 3510–DS–P

[7] *See, e.g., Carbon and Certain Alloy Steel Wire Rod From the People's Republic of China: Final Affirmative Countervailing Duty Determination and Final Affirmative Critical Circumstances Determination,* 79 FR 68858 (November 19, 2014); *see also Calcium Hypochlorite From the People's Republic of China: Final Affirmative Countervailing Duty Determination,* 79 FR 74064 (December 15, 2014).

[8] *See* 19 CFR 351.309(c)–(d) and 19 CFR 351.310(c).

[9] Melamine is also known as 2,4,6-triamino-s-triazine; l,3,5-Triazine-2,4,6-triamine; Cyanurotriamide; Cyanurotriamine; Cyanuramide; and by various brand names.

DEPARTMENT OF COMMERCE

International Trade Administration

[C–274–807]

Melamine From Trinidad and Tobago: Preliminary Affirmative Countervailing Duty Determination and Alignment of Final Determination With Final Antidumping Determination

AGENCY: Enforcement and Compliance, International Trade Administration, Department of Commerce.

SUMMARY: The Department of Commerce (the Department) preliminarily determines that countervailable subsidies are being provided to a producer and exporter of melamine from Trinidad and Tobago. The period of investigation is January 1, 2013, through December 31, 2013. Interested parties are invited to comment on this preliminary determination.

DATES: Effective date April 20, 2015.

FOR FURTHER INFORMATION CONTACT: Kristen Johnson or Patricia Tran, Office III, AD/CVD Operations, Enforcement and Compliance, International Trade Administration, U.S. Department of Commerce, 14th Street and Constitution Avenue NW., Washington, DC 20230; telephone: (202) 482–4793 and (202) 482–1503, respectively.

Alignment of Final Countervailing Duty (CVD) Determination With Final Antidumping Duty (AD) Determination

On the same day that the Department initiated this CVD investigation, the Department also initiated a CVD investigation of melamine from the People's Republic of China (PRC) and AD investigations of melamine from the PRC and Trinidad and Tobago.[1] The AD and CVD investigations cover the same merchandise. On April 1, 2015, in accordance with section 705(a)(1) of the Tariff Act of 1930, as amended (the Act) and 19 CFR 351.210(b)(4)(i), Cornerstone Chemical Company (Petitioner) requested alignment of the final CVD determination with the final AD determination of melamine from Trinidad and Tobago.[2] Therefore, in accordance with section 705(a)(1) of the Act and 19 CFR 351.210(b)(4)(i), we are aligning the final CVD determination with the final AD determination. Consequently, the final CVD determination will be issued on the same date as the final AD determination, which is currently scheduled to be issued no later than August 24, 2015, unless postponed.

Scope of the Investigation

The product covered by this investigation is melamine from Trinidad and Tobago. For a complete description of the scope of the investigation, *see* Appendix 1 to this notice.

Methodology

The Department is conducting this CVD investigation in accordance with section 701 of the Act. For a full description of the methodology underlying our preliminary conclusions, *see* the Preliminary Issues and Decision Memorandum.[3] The Preliminary Issues and Decision Memorandum is a public document and is on file electronically *via* Enforcement and Compliance's Antidumping and Countervailing Duty Centralized Electronic Service System (ACCESS).[4] ACCESS is available to registered users at *http://access.trade.gov* and is available to all parties in the Central Records Unit, Room 7046 of the main Department of Commerce building. In addition, a complete version of the Preliminary Issues and Decision Memorandum can be accessed directly on the internet at *http://enforcement.trade.gov/frn/index.html.* The signed Preliminary Issues and Decision Memorandum and the electronic version of the Preliminary Issues and Decision Memorandum are identical in content.

Preliminary Determination and Suspension of Liquidation

In accordance with section 703(d)(1)(A)(i) of the Act, we calculated a subsidy rate for Methanol Holdings (Trinidad) Ltd. (MHTL), the only company subject to individual examination in this investigation. We preliminarily determine that MHTL's countervailable subsidy rate is 27.48 percent *ad valorem.* The All Others rate is 27.48 percent *ad valorem,* which is the rate calculated for MHTL.

In accordance with sections 703(d)(1)(B) and (d)(2) of the Act, we are directing U.S. Customs and Border Protection (CBP) to suspend liquidation of all entries of melamine from Trinidad and Tobago that are entered, or withdrawn from warehouse, for consumption on or after the date of the publication of this notice in the **Federal Register**, and to require a cash deposit for such entries of merchandise in the amounts indicated above.

Disclosure and Public Comment

The Department intends to disclose to interested parties the calculations performed in connection with this preliminary determination within five days of its public announcement.[5] Interested parties may submit case and rebuttal briefs. For a schedule of the deadlines for filing case briefs, rebuttal briefs, and hearing requests, *see* the Preliminary Issues and Decision Memorandum.

U.S. International Trade Commission (ITC) Notification

In accordance with section 703(f) of the Act, we will notify the ITC of our determination. In addition, we are making available to the ITC all non-privileged and non-proprietary information relating to this investigation. We will allow the ITC access to all privileged and business proprietary information in our files, provided the ITC confirms that it will not disclose such information, either publicly or under an administrative protective order, without the written consent of the Assistant Secretary for Enforcement and Compliance.

In accordance with section 705(b)(2) of the Act, if our final determination is affirmative, the ITC will make its final determination within 45 days after the Department makes its final determination.

This determination is issued and published pursuant to sections 703(f) and 777(i) of the Act.

Dated: April 13, 2015.

Paul Piquado,

Assistant Secretary for Enforcement and Compliance.

Appendix 1

Scope of the Investigation

The merchandise subject to this investigation is melamine (Chemical Abstracts Service (CAS) registry number 108–

[1] *See Melamine from the People's Republic of China and Trinidad and Tobago: Initiation of Countervailing Duty Investigations,* 79 FR 73030 (December 9, 2014); and *Melamine from the People's Republic of China and Trinidad and Tobago: Initiation of Less-Than-Fair-Value Investigations,* 79 FR 73037 (December 9, 2014).

[2] *See* Letter from Petitioner regarding ''Request for Alignment'' (April 1, 2015).

[3] *See* Memorandum from Christian Marsh, Deputy Assistant Secretary for Antidumping and Countervailing Duty Operations, to Paul Piquado, Assistant Secretary for Enforcement and Compliance regarding ''Decision Memorandum for the Preliminary Determination in the Countervailing Duty Investigation of Melamine from Trinidad and Tobago,'' dated concurrently with this notice (Preliminary Issues and Decision Memorandum).

[4] On November 24, 2014, Enforcement and Compliance changed the name of Enforcement and Compliance's AD and CVD Centralized Electronic Service System (IA ACCESS) to AD and CVD Centralized Electronic Service System (ACCESS). The Web site location was changed from *http://iaaccess.trade.gov* to *http://access.trade.gov.* The Final Rule changing the references to the regulations can be found at 79 FR 69046 (November 20, 2014).

[5] *See* 19 CFR 351.224(b).

78–01, molecular formula $C_3H_6N_6$).[6] Melamine is a crystalline powder or granule typically (but not exclusively) used to manufacture melamine formaldehyde resins. All melamine is covered by the scope of this investigation irrespective of purity, particle size, or physical form. Melamine that has been blended with other products is included within this scope when such blends include constituent parts that have been intermingled, but that have not been chemically reacted with each other to produce a different product. For such blends, only the melamine component of the mixture is covered by the scope of this investigation. Melamine that is otherwise subject to this investigation is not excluded when commingled with melamine from sources not subject to this investigation. Only the subject component of such commingled products is covered by the scope of this investigation.

The subject merchandise is provided for in subheading 2933.61.0000 of the Harmonized Tariff Schedule of the United States (HTSUS). Although the HTSUS subheading and CAS registry number are provided for convenience and customs purposes, the written description of the scope is dispositive.

Appendix 2

List of Topics Discussed in the Preliminary Issues and Decision Memorandum

1. Summary
2. Background
3. Alignment
4. Scope Comments
5. Scope of the Investigation
6. Injury Test
7. Subsidies Valuation
8. Unequityworthiness and Uncreditworthiness
9. Analysis of Programs
10. ITC Notification
11. Disclosure and Public Comment
12. Verification
13. Conclusion

[FR Doc. 2015–09003 Filed 4–17–15; 8:45 am]

BILLING CODE 3510–DS–P

DEPARTMENT OF COMMERCE

International Trade Administration

Quarterly Update to Annual Listing of Foreign Government Subsidies on Articles of Cheese Subject to an In-Quota Rate of Duty

AGENCY: Enforcement and Compliance, International Trade Administration Department of Commerce.

DATES: *Effective Date:* April 20, 2015.

FOR FURTHER INFORMATION CONTACT: Stephanie Moore, AD/CVD Operations, Office III, Enforcement and Compliance, International Trade Administration, U.S. Department of Commerce, 14th Street and Constitution Ave. NW., Washington, DC 20230, telephone: (202) 482–3692.

SUPPLEMENTARY INFORMATION: Section 702 of the Trade Agreements Act of 1979 (as amended) (the Act) requires the Department of Commerce (the Department) to determine, in consultation with the Secretary of Agriculture, whether any foreign government is providing a subsidy with respect to any article of cheese subject to an in-quota rate of duty, as defined in section 702(h) of the Act, and to publish quarterly updates to the type and amount of those subsidies. We hereby provide the Department's quarterly update of subsidies on articles of cheese that were imported during the periods October 1, 2014 through December 31, 2014.

The Department has developed, in consultation with the Secretary of Agriculture, information on subsidies, as defined in section 702(h) of the Act, being provided either directly or indirectly by foreign governments on articles of cheese subject to an in-quota rate of duty. The appendix to this notice lists the country, the subsidy program or programs, and the gross and net amounts of each subsidy for which information is currently available. The Department will incorporate additional programs which are found to constitute subsidies, and additional information on the subsidy programs listed, as the information is developed.

The Department encourages any person having information on foreign government subsidy programs which benefit articles of cheese subject to an in-quota rate of duty to submit such information in writing to the Assistant Secretary for Enforcement and Compliance, U.S. Department of Commerce, 14th Street and Constitution Ave. NW., Washington, DC 20230.

This determination and notice are in accordance with section 702(a) of the Act.

Dated: April 13, 2015.

Paul Piquado,

Assistant Secretary for Enforcement and Compliance.

Appendix

Subsidy Programs on Cheese Subject to an In-Quota Rate of Duty

Country	Program(s)	Gross [1] subsidy ($/lb)	Net [2] subsidy ($/lb)
28 European Union Member States [3]	European Union Restitution Payments	$0.00	$0.00
Canada	Export Assistance on Certain Types of Cheese	0.40	0.40
Norway	Indirect (Milk) Subsidy	0.00	0.00
	Consumer Subsidy Total	0.00	0.00
	Total	0.00	0.00
Switzerland	Deficiency Payments	0.00	0.00

[1] Defined in 19 U.S.C. 1677(5).
[2] Defined in 19 U.S.C. 1677(6).
[3] The 28 member states of the European Union are: Austria, Belgium, Bulgaria, Croatia, Cyprus, Czech Republic, Denmark, Estonia, Finland, France, Germany, Greece, Hungary, Ireland, Italy, Latvia, Lithuania, Luxembourg, Malta, Netherlands, Poland, Portugal, Romania, Slovakia, Slovenia, Spain, Sweden, and the United Kingdom.

[FR Doc. 2015–09030 Filed 4–17–15; 8:45 am]

BILLING CODE 3510–DS–P

[6] Melamine is also known as 2,4,6-triamino-s-triazine; l,3,5-Triazine-2,4,6-triamine; Cyanurotriamide; Cyanurotriamine; Cyanuramide; and by various brand names.

DEPARTMENT OF COMMERCE

National Oceanic and Atmospheric Administration

RIN 0648–XC849

New England Fishery Management Council; Statement of Organization, Practices, and Procedures

AGENCY: National Marine Fisheries Service (NMFS), National Oceanic and Atmospheric Administration (NOAA), Commerce.

ACTION: Notice of availability.

SUMMARY: The Assistant Administrator for Fisheries has approved amendments to the New England Fishery Management Council's Statement of Organization, Practices, and Procedures. Copies of the document are available to the public.

ADDRESSES: New England Fishery Management Council, 50 Water Street, Mill 2, Newburyport, Massachusetts 01950.

FOR FURTHER INFORMATION CONTACT: Thomas A. Nies, Executive Director, phone 302–674–2331, fax 302–674–5399.

SUPPLEMENTARY INFORMATION: In accordance with the Magnuson-Stevens Fishery Conservation and Magnuson Act, section 302(f)(6), each regional fishery management council is required to describe its organization and operations in a Statement of Organization, Practices, and Procedures (SOPP). The New England Fishery Management Council has amended its SOPP to be compliant with the 2006 amendments to the Magnuson-Stevens Act. Council function and responsibilities, development of acceptable biological catch, public notice, and other administrative procedures have been updated.

Pursuant to 50 CFR 600.115(b), the New England Fishery Management Council's SOPP, as amended, has been approved by the Assistant Administrator for Fisheries, on behalf of the Secretary of Commerce. The SOPP is available to the public. Copies may be obtained by contacting the Council (see **ADDRESSES**). An electronic version of the SOPP may be downloaded from *http://www.nefmc.org/*.

Authority: 16 U.S.C. 1801 *et seq.*

Dated: April 14, 2015

Samuel D. Rauch III,

Deputy Assistant Administrator for Regulatory Programs, National Marine Fisheries Service.

[FR Doc. 2015–08969 Filed 4–17–15; 8:45 am]

BILLING CODE 3510–22–P

DEPARTMENT OF COMMERCE

National Telecommunications and Information Administration

Commerce Spectrum Management Advisory Committee Meeting

AGENCY: National Telecommunications and Information Administration, U.S. Department of Commerce.

ACTION: Notice of open meeting.

SUMMARY: This notice announces a public meeting of the Commerce Spectrum Management Advisory Committee (Committee). The Committee provides advice to the Assistant Secretary of Commerce for Communications and Information and the National Telecommunications and Information Administration (NTIA) on spectrum management policy matters.

DATES: The meeting will be held on May 12, 2015, from 1:30 p.m. to 4:30 p.m., Mountain Daylight Time.

ADDRESSES: The meeting will be held at the National Institute of Standards and Technology (NIST), Communication Technology Laboratory, 325 Broadway, Room 1A116, Building 81, Boulder, CO 80305. Public comments may be mailed to Commerce Spectrum Management Advisory Committee, National Telecommunications and Information Administration, 1401 Constitution Avenue NW., Room 4099, Washington, DC 20230 or emailed to *BWashington@ntia.doc.gov.*

FOR FURTHER INFORMATION CONTACT: Bruce M. Washington, Designated Federal Officer, at (202) 482–6415 or *BWashington@ntia.doc.gov;* and/or visit NTIA's Web site at *http://www.ntia.doc.gov/category/csmac.*

SUPPLEMENTARY INFORMATION:

Background: The Committee provides advice to the Assistant Secretary of Commerce for Communications and Information on needed reforms to domestic spectrum policies and management in order to: License radio frequencies in a way that maximizes their public benefits; keep wireless networks as open to innovation as possible; and make wireless services available to all Americans. *See* Charter at *http://www.ntia.doc.gov/other-publication/2015/csmac-2015-charter.* This Committee is subject to the Federal Advisory Committee Act (FACA), 5 U.S.C. App. 2, and is consistent with the National Telecommunications and Information Administration Act, 47 U.S.C. 904(b). The Committee functions solely as an advisory body in compliance with the FACA. For more information about the Committee visit: *http://www.ntia.doc.gov/category/csmac.*

Matters to Be Considered: The Committee provides advice to the Assistant Secretary to assist in developing and maintaining spectrum management policies that enable the United States to maintain or strengthen its global leadership role in the introduction of communications technology and services and innovation, thus expanding the economy, adding jobs, and increasing international trade, while at the same time providing for the expansion of existing technologies and supporting the country's homeland security, national defense, and other critical needs of government missions. The Committee will hear reports of the following Subcommittees:

1. Enforcement
2. General Occupancy Measurements and Quantification of Federal Spectrum Use
3. Spectrum Management via Databases
4. Federal Access to Non-federal Bands (Bi-Directional Sharing)
5. Spectrum Sharing Cost Recovery Alternatives
6. Industry and Government Collaboration

NTIA will post a detailed agenda on its Web site, *http://www.ntia.doc.gov/category/csmac,* prior to the meeting. To the extent that the meeting time and agenda permit, any member of the public may speak to or otherwise address the Committee regarding the agenda items. *See Open Meeting and Public Participation Policy,* available at *http://www.ntia.doc.gov/category/csmac.*

Time and Date: The meeting will be held on May 12, 2015, from 1:30 p.m. to 4:30 p.m., Mountain Daylight Time. The times and the agenda topics are subject to change. The meeting will be available via two-way audio link and may be webcast. Please refer to NTIA's Web site, *http://www.ntia.doc.gov/category/csmac,* for the most up-to-date meeting agenda and access information.

Place: The meeting will be held at the NIST Communication Technology Laboratory, 325 Broadway, Room 1A116, Building 81, Boulder, CO 80305. The meeting will be open to the public and press on a first-come, first-served basis. Space is limited. All visitors, especially Foreign National Visitors, must send a written request to participate in the meeting on site. Such visit requests must be provided to Mr. Washington at *BWashington@ntia.doc.gov* no later than May 4, 2015. Visitors from certain states must adhere to the Real ID Act of 2005 requirements, in order to access the NIST campus. For

more information on the new visitor access requirements, visit: *http://www.nist.gov/public_affairs/visitor/.* The public meeting is physically accessible to people with disabilities. Individuals requiring accommodations, such as sign language interpretation or other ancillary aids, are asked to notify Mr. Washington at (202) 482–6415 or *BWashington@ntia.doc.gov* at least ten (10) business days before the meeting.

Status: Interested parties are invited to attend and to submit written comments to the Committee at any time before or after the meeting. Parties wishing to submit written comments for consideration by the Committee in advance of a meeting must send them to NTIA's Washington, DC office at the above-listed address and comments must be received five (5) business days before the scheduled meeting date, to provide sufficient time for review. Comments received after this date will be distributed to the Committee, but may not be reviewed prior to the meeting. It would be helpful if paper submissions also include a compact disc (CD) containing copies of the submissions in Word or PDF format. CDs should be labeled with the name and organizational affiliation of the filer. Alternatively, comments may be submitted electronically to *BWashington@ntia.doc.gov.* Comments provided via electronic mail also may be submitted in one or more of the formats specified above.

Records: NTIA maintains records of all Committee proceedings. Committee records are available for public inspection at NTIA's Washington, DC office at the address above. Documents including the Committee's charter, member list, agendas, minutes, and any reports are available on NTIA's Committee Web page at *http://www.ntia.doc.gov/category/csmac.*

Dated: April 14, 2015.

Kathy D. Smith,

Chief Counsel, National Telecommunications and Information Administration.

[FR Doc. 2015–08892 Filed 4–17–15; 8:45 am]

BILLING CODE 3510–60–P

CONSUMER PRODUCT SAFETY COMMISSION

[Docket No. CPSC–2007–0035]

Privacy Act of 1974; System of Records

AGENCY: Consumer Product Safety Commission.

ACTION: Notice of new system of records.

SUMMARY: In accordance with the Privacy Act of 1974, the Consumer Product Safety Commission (CPSC) announces a new Privacy Act system of records. The purpose of the new system of records, relating to mailing, contact, and other lists, is to assist in the dissemination of CPSC information and documents, including dissemination to those who request such materials or information; and to maintain lists of business or other contacts for future reference.

DATES: Comments must be received no later than May 20, 2015. The new system of records will be effective June 1, 2015, unless comments are received that would result in a contrary determination.

ADDRESSES: You may submit comments, identified by Docket No. CPSC–2007–0035, by any of the following methods:

Electronic Submissions: Submit electronic comments to the Federal eRulemaking Portal at: *http://www.regulations.gov.* Follow the instructions for submitting comments. The Commission does not accept comments submitted by electronic mail (email), except through *www.regulations.gov.* The Commission encourages you to submit electronic comments by using the Federal eRulemaking Portal, as described above.

Written Submissions: Submit written submissions in the following way: mail/hand delivery/courier to: Office of the Secretariat, Consumer Product Safety Commission, Room 820, 4330 East West Highway, Bethesda, MD 20814; telephone (301) 504–7923.

Instructions: All submissions received must include the agency name and docket number for this notice. All comments received may be posted without change, including any personal identifiers, contact information, or other personal information provided, to: *http://www.regulations.gov.* Do not submit confidential business information, trade secret information, or other sensitive or protected information that you do not want to be available to the public. If furnished at all, such information should be submitted in writing.

Docket: For access to the docket to read background documents or comments received, go to *http://www.regulations.gov,* and insert the docket number, CPSC–2007–0035, into the ''Search'' box, and follow the prompts.

FOR FURTHER INFORMATION CONTACT: Mary James, Office of Information Technology, Consumer Product Safety Commission, 4330 East West Highway, Bethesda, MD 20814, (301) 504–7213, or by email to: *mjames@cpsc.gov.*

SUPPLEMENTARY INFORMATION: The CPSC is establishing this new system of records under the Privacy Act, 5 U.S.C. 552a, for CPSC mailing, contact, and other lists of individuals, organizations, businesses, and other contacts. These lists are maintained to assist in the distribution of CPSC documents and information in furtherance of the CPSC's mission to protect the public against unreasonable risks of injury associated with the use of consumer products.

In accordance with 5 U.S.C. 552a(r), the CPSC has provided a report of this updated system of records to the Office of Management and Budget and to Congress.

Alberta Mills,

Acting Secretary, Consumer Product Safety Commission.

CPSC–34

SYSTEM NAME:

Mailing and Other Lists

SYSTEM LOCATION:

U.S. Consumer Product Safety Commission, 4330 East West Highway, Bethesda, MD 20814.

CATEGORIES OF INDIVIDUALS COVERED BY THE SYSTEM:

Individuals covered by the new system of records include individuals who have indicated an interest in receiving CPSC materials or who are participants or contacts in connection with matters under consideration at CPSC, and other individuals who may be contacts, resources, or leads for various CPSC subject matter areas or programs.

CATEGORIES OF RECORDS IN THE SYSTEM:

The records in the new system may include some or all of the following information: Name; title; company, organization or affiliation; address; telephone number; email or internet address. This system includes mailing lists, contact lists, address lists, and information developed from business cards, sign-in sheets or rosters compiled at meetings. This system excludes mailing or contact lists or similar records collected or maintained under other CPSC systems of records. For example, addresses or other contact information for individuals who import materials into the United States are covered by CPSC–33 (International Trade Data System Risk Assessment Methodology System (ITDS/RAM)).

AUTHORITY FOR MAINTENANCE OF THE SYSTEM:

44 U.S.C. 3101; CPSC Directives Order No. 0730.1 (Revised 2/06).

PURPOSE(S):

The system of records is used to assist in the dissemination of CPSC information and documents to individuals, organizations, businesses, and other contacts in accordance with applicable legal constraints, and to maintain lists of business or other contacts for future reference, in furtherance of the CPSC's mission to protect the public against unreasonable risks of injury associated with the use of consumer products.

ROUTINE USES OF RECORDS MAINTAINED IN THE SYSTEM, INCLUDING CATEGORIES OF USERS AND THE PURPOSES OF SUCH USES:

In addition to those disclosures generally permitted under 5 U.S.C. 552a(b) of the Privacy Act, all or a portion of the records or information contained in this system may be disclosed to authorized entities, as is determined to be relevant and necessary, outside CPSC as a routine use pursuant to 5 U.S.C. 552a(b)(3), as follows:

1. To disclose information to the National Archives and Records Administration for use in records management inspections.

2. Contractors, agents, or other authorized individuals performing work on a contract, service, cooperative agreement, job, or other activity on behalf of CPSC or Federal Government and who have a need to access the information in the performance of their duties.

POLICIES AND PRACTICES FOR STORING, RETRIEIVING, ACCESSING, RETAINING, AND DISPOSING OF RECORDS IN THE SYSTEM:

STORAGE:

Records are maintained in electronic format and paper form. Electronic records are stored in computerized databases. Other records are maintained in locked file cabinets or in agency office space whose access is limited to those with authorization.

RETRIEVABILITY:

Information about individuals maintained in mailing lists and other information covered by this system of records may be retrieved by the individual's name, an employer or institutional or organizational affiliation name, the individual or organization category on mailing list, the city or zip code, or by any other personal identifiers.

SAFEGUARDS:

Access to electronic records is restricted to authorized personnel who have been issued non-transferrable access codes and passwords. Other records are maintained in locked file cabinets or in agency office space whose access is limited to those with authorization.

RETENTION AND DISPOSAL:

CPSC personnel revise the lists as necessary. The records can be destroyed when deemed no longer useful.

SYSTEM MANAGER(S) AND ADDRESS:

Secretary, Office of the Secretariat, Consumer Product Safety Commission, 4330 East West Highway, Bethesda, MD 20814.

NOTIFICATION PROCEDURE:

Individuals wishing to determine whether this system of records contains information about them may inquire in writing in accordance with the instructions appearing at 16 CFR part 1014. The request will be made to Freedom of Information/Privacy Act Officer, Office of the Secretariat, Consumer Product Safety Commission, 4330 East West Highway, Bethesda, MD 20814.

RECORD ACCESS PROCEDURES:

Same as notification.

CONTESTING RECORD PROCEDURES:

Same as notification.

RECORD SOURCE CATEGORIES:

These records contain information developed from publicly available information, information obtained from the relevant individual, information from business cards, sign-in sheets or rosters compiled at meetings, or from other sources. Information in this system of records may also be obtained from other CPSC records systems.

EXEMPTIONS CLAIMED FOR THE SYSTEM:

None.

[FR Doc. 2015–08999 Filed 4–17–15; 8:45 am]

BILLING CODE 6355–01–P

DEPARTMENT OF DEFENSE

Office of the Secretary

Defense Science Board; Notice of Federal Advisory Committee Meetings

AGENCY: Department of Defense.

ACTION: Notice of Federal Advisory Committee meetings.

SUMMARY: The Defense Science Board will meet in closed session on May 20–21, 2015, from 8:00 a.m. to 5:00 p.m. at the Pentagon, Room 3E863, Washington, DC.

DATES: May 20–21, 2015, from 8:00 a.m. to 5:00 p.m.

ADDRESSES: The Pentagon, Room 3E863, Washington, DC.

FOR FURTHER INFORMATION CONTACT: Ms. Debra Rose, Executive Officer, Defense Science Board, 3140 Defense Pentagon, Room 3B888A, Washington, DC 20301–3140, via email at *debra.a.rose20.civ@mail.mil,* or via phone at (703) 571–0084.

SUPPLEMENTARY INFORMATION: This meeting is being held under the provisions of the Federal Advisory Committee Act of 1972 (5 U.S.C., Appendix, as amended), the Government in the Sunshine Act of 1976 (5 U.S.C. 552b, as amended), and 41 CFR 102–3.150.

The mission of the Defense Science Board is to advise the Secretary of Defense and the Under Secretary of Defense for Acquisition, Technology & Logistics on scientific and technical matters as they affect the perceived needs of the Department of Defense. At this meeting, the Board will discuss interim findings and recommendations resulting from ongoing Task Force activities. The Board will also discuss plans for future consideration of scientific and technical aspects of specific strategies, tactics, and policies as they may affect the U.S. national defense posture and homeland security.

In accordance with section 10(d) of the Federal Advisory Committee Act, Public Law 92–463, as amended (5 U.S.C. App. 2) and 41 CFR 102–3.155, the Department of Defense has determined that the Defense Science Board meeting for May 20–21, 2015, will be closed to the public. Specifically, the Under Secretary of Defense (Acquisition, Technology, and Logistics), in consultation with the DoD Office of General Counsel, has determined in writing that all sessions of meeting for May 20–21, 2015, will be closed to the public because it will consider matters covered by 5 U.S.C. 552b(c)(1) and (4).

In accordance with 41 CFR 102–3.140 and section 10(a)(3) of the Federal Advisory Committee Act, interested persons may submit a written statement for consideration by the Defense Science Board. Individuals submitting a written statement must submit their statement to the Designated Federal Official at the address detailed in **FOR FURTHER INFORMATION CONTACT** at any point, however, if a written statement is not received at least 10 calendar days prior to the meeting, which is the subject of this notice, then it may not be provided to or considered by the Defense Science Board. The Designated Federal Official will review all timely submissions with the Defense Science Board Chairperson,

and ensure they are provided to members of the Defense Science Board before the meeting that is the subject of this notice.

Dated: April 15, 2015.

Aaron Siegel,

Alternate OSD Federal Register Liaison Officer, Department of Defense.

[FR Doc. 2015–08973 Filed 4–17–15; 8:45 am]

BILLING CODE 5001–06–P

DEPARTMENT OF DEFENSE

Office of the Secretary

Board of Regents, Uniformed Services University of the Health Sciences; Notice of Federal Advisory Committee Meeting

AGENCY: Department of Defense; Uniformed Services University of the Health Sciences (USU).

ACTION: Quarterly meeting notice.

SUMMARY: The Department of Defense is publishing this notice to announce the following meeting of the Board of Regents, Uniformed Services University of the Health Sciences (''the Board''). This meeting will be partially-closed to the public.

DATES: Friday, May 15, 2015, from 8:00 a.m. to 11:30 a.m. (Open Session) and 1:15 p.m. to 2:00 p.m. (Closed Session).

ADDRESSES: Uniformed Services University of the Health Sciences, 4301 Jones Bridge Road, Everett Alvarez Jr. Board of Regents Room (D3001), Bethesda, Maryland 20814.

FOR FURTHER INFORMATION CONTACT: Jennifer Nuetzi James, Designated Federal Officer, 4301 Jones Bridge Road, D3002, Bethesda, Maryland 20814; telephone 301–295–3066; email *jennifer.nuetzi-james@usuhs.edu*.

SUPPLEMENTARY INFORMATION: This meeting notice is being published under the provisions of the Federal Advisory Committee Act of 1972 (5 U.S.C., Appendix, as amended), the Government in the Sunshine Act of 1976 (5 U.S.C. 552b, as amended), and 41 CFR 102–3.150.

Purpose of the Meeting: The purpose of the meeting is to provide advice and recommendations to the Secretary of Defense through the Under Secretary of Defense for Personnel and Readiness, on academic and administrative matters critical to the full accreditation and successful operation of the University. These actions are necessary for the University to pursue its mission, which is to educate, train and comprehensively prepare uniformed services health professionals, officers, scientists and leaders to support the Military and Public Health Systems, the National Security and National Defense Strategies of the United States, and the readiness of the Uniformed Services.

Agenda: The actions scheduled to occur include documenting for the record the approval of the minutes from the Board Meeting held on February 3, 2015; recommendations regarding the awarding of post-baccalaureate degrees; recommendations regarding the approval of faculty appointments and promotions; a review of awards and honors; award nominations; and proposed updates to Board governing documents. The USU President will provide a report on recent actions affecting academic and operational aspects of the University. Member Reports include an annual update from the Henry M. Jackson Foundation for the Advancement of Military Medicine; the USU Inspector General (IG) will provide an update on IG issues; the department of Military and Emergency Medicine will discuss its approach to leadership training in the USU F. Edward Hébert School of Medicine; the USU Alumni Association will provide an annual update; the USU Brigade will provide a report on the Brigade office; and the Office of General Counsel will provide an annual ethics and office review. A closed session will be held, after the open session, to discuss active investigations and personnel actions.

Meeting Accessibility: Pursuant to Federal statute and regulations (5 U.S.C. 552b and 41 CFR 102–3.140 through 102–3.165) and the availability of space, the meeting is open to the public from 8:00 a.m. to 11:30 a.m. Seating is on a first-come basis. Members of the public wishing to attend the meeting should contact Jennifer Nuetzi James five business days prior to the meeting, at the address and phone number noted in the **FOR FURTHER INFORMATION CONTACT** section.

Pursuant to 5 U.S.C. 552b(c)(2, 5–7), the Department of Defense has determined that the portion of the meeting from 1:15 p.m. to 2:00 p.m. shall be closed to the public. The Under Secretary of Defense (Personnel and Readiness), in consultation with the Office of the DoD General Counsel, has determined in writing that a portion of the committee's meeting will be closed as the discussion will disclose sensitive personnel information, will include matters that relate solely to the internal personnel rules and practices of the agency, will involve allegations of a person having committed a crime or censuring an individual, and may disclose investigatory records compiled for law enforcement purposes.

Written Statements: Pursuant to 41 CFR 102–3.140, and section 10(a)(3) of the Federal Advisory Committee Act of 1972, the public or interested organizations may submit written comments to the Board about its approved agenda pertaining to this meeting or at any time regarding the Board's mission. Individuals submitting a written statement must submit their statement to the Designated Federal Officer at the address listed in **FOR FURTHER INFORMATION CONTACT**. Written statements that do not pertain to a scheduled meeting of the Board may be submitted at any time. However, if individual comments pertain to a specific topic being discussed at the planned meeting, then these statement must be received at least 5 calendar days prior to the meeting, otherwise, the comments may not be provided to or considered by the Board until a later date. The Designated Federal Officer will compile all timely submissions with the Board's Chairman and ensure such submissions are provided to Board Members before the meeting.

Dated: April 15, 2015.

Aaron Siegel,

Alternate OSD Federal Register Liaison Officer, Department of Defense.

[FR Doc. 2015–08970 Filed 4–17–15; 8:45 am]

BILLING CODE 5001–06–P

DEPARTMENT OF DEFENSE

Office of the Secretary

Charter Renewal of Department of Defense Federal Advisory Committees

AGENCY: Department of Defense.

ACTION: Renewal of Federal Advisory Committee.

SUMMARY: The Department of Defense is publishing this notice to announce that it is renewing the charter for the Board of Regents, Uniformed Services University of the Health Sciences (''the Board'').

FOR FURTHER INFORMATION CONTACT: Jim Freeman, Advisory Committee Management Officer for the Department of Defense, 703–692–5952.

SUPPLEMENTARY INFORMATION: This committee's charter is being renewed pursuant to 10 U.S.C. 2113a and in accordance with the Federal Advisory Committee Act (FACA) of 1972 (5 U.S.C., Appendix, as amended) and 41 CFR 102–3.50(a).

The Board is a statutory Federal advisory committee that, assists the Secretary of Defense in an advisory capacity in carrying out the Secretary's responsibility to conduct the business of

the Uniformed Services University of the Health Sciences (''the University''). The Board shall provide advice and recommendations on academic and administrative matters critical to the full accreditation and successful operation of the University.

The DoD, through the Office of the USD(P&R), provides support, as deemed necessary, for the Board's performance and functions, and ensures compliance with the requirements of the FACA, the Government in the Sunshine Act of 1976 (5 U.S.C. 552b, as amended) (''the Sunshine Act''), governing Federal statutes and regulations, and established DoD policies and procedures. Under the provisions of 10 U.S.C. 2113a(b), the Board shall be composed of 15 members, appointed or designated as follows:

a. Nine persons outstanding in the field of health care, higher education administration, or public policy, who shall be appointed from civilian life by the Secretary of Defense;

b. The Secretary of Defense, or his designee, who shall be an *ex-officio* member;

c. The Surgeons General of the Uniformed Services, who shall be *ex-officio* members; and

d. The President of the University, who shall be a non-voting, *ex-officio* member.

As directed by 10 U.S.C. 2113a(c), the term of office for each member of the Board (other than *ex-officio* members) shall be six years except that:

a. Any member appointed to fill a vacancy occurring before the expiration of the term for which his predecessor was appointed shall be appointed for the remainder of such term; and,

b. Any member whose term of office has expired shall continue to serve until his successor is appointed.

In accordance with 10 U.S.C. 2113a(d), one of the members of the Board (other than an *ex-officio* member) shall be designated as Chair by the Secretary of Defense and shall be presiding officer of the Board.

Board members that are not *ex-officio* members shall be appointed by the Secretary of Defense and their appointments will be renewed on an annual basis according to DoD policies and procedures.

Each member, based upon his or her individual professional experience, provides his or her best judgment on the matters before the Board, and he or she does so in a manner that is free from conflict of interest. Board members who are not full-time or permanent part-time Federal officers or employees, will be appointed as experts or consultants pursuant to 5 U.S.C. 3109 to serve as special government employee (SGE) members. Board members who are full-time or permanent part-time Federal officers or employees will serve as regular government employee (RGE) members pursuant to 41 CFR 102–3.130(a). No member may serve more than two consecutive terms of service without Secretary of Defense or Deputy Secretary of Defense approval.

Pursuant to 10 U.S.C. 2113a(e), Board members (other than *ex-officio* members), while attending conference or meetings or while otherwise performing their duties as members, shall be entitled to receive compensation at a rate to be fixed by the Secretary of Defense. Each member is reimbursed for travel and per diem as it pertains to official business of the Board.

DoD, when necessary and consistent with the Board's mission and DoD policies and procedures, may establish subcommittees, task forces, or working groups to support the Board. Establishment of subcommittees will be based upon a written determination, to include terms of reference, by the Secretary of Defense, the Deputy Secretary of Defense, or the USD(P&R), as the Board's Sponsor.

Such subcommittees will not work independently of the Board and will report all of their recommendations and advice solely to the Board for full and open deliberation and discussion. Subcommittees, task forces, or working groups have no authority to make decisions and recommendations, verbally or in writing, on behalf of the Board. No subcommittee or any of its members can update or report, verbally or in writing, on behalf of the Board, directly to the DoD or any Federal officers or employees.

Each member, based upon his or her individual professional experience, provides his or her best judgment on the matters before the Board, and he or she does so in a manner that is free from conflict of interest. All subcommittee members will be appointed by the Secretary of Defense or the Deputy Secretary of Defense to a term of service of one-to-four years, with annual renewals, even if the individual is already a member of the Board. Subcommittee members will not serve more than two consecutive terms of service, unless authorized by the Secretary of Defense or the Deputy Secretary of Defense. Subcommittee members who are not full-time or permanent part-time Federal officers or employees will be appointed as an expert or consultant pursuant to 5 U.S.C. 3109, to serve as a SGE member. Subcommittee members who are full-time or permanent part-time Federal officers or employees will be appointed pursuant to 41 CFR 102–3.130(a), to serve as a RGE member. With the exception of reimbursement of official travel and per diem related to the Board or its subcommittees, subcommittee members will serve without compensation.

All subcommittees operate under the provisions of FACA, the Sunshine Act, governing Federal statutes and regulations, and established DoD policies and procedures.

The Board's Designated Federal Officer (DFO) must be a full-time or permanent part-time DoD officer or employee, appointed in accordance with established DoD policies and procedures. The Board's DFO is required to attend at all meetings of the Board and its subcommittees for the entire duration of each and every meeting. However, in the absence of the Board's DFO, a properly approved Alternate DFO, duly appointed to the Board according to established DoD policies and procedures, must attend the entire duration of all meetings of the Board and its subcommittees.

The DFO, or the Alternate DFO, calls all meetings of the Board and its subcommittees; prepares and approves all meeting agendas; and adjourns any meeting when the DFO, or the Alternate DFO, determines adjournment to be in the public interest or required by governing regulations or DoD policies and procedures.

Pursuant to 41 CFR 102–3.105(j) and 102–3.140, the public or interested organizations may submit written statements to Board membership about the Board's mission and functions. Written statements may be submitted at any time or in response to the stated agenda of planned meeting of the Board.

All written statements shall be submitted to the DFO for the Board, and this individual will ensure that the written statements are provided to the membership for their consideration. Contact information for the Board's DFO can be obtained from the GSA's FACA Database—*http://www.facadatabase.gov/.*

The DFO, pursuant to 41 CFR 102–3.150, will announce planned meetings of the Board. The DFO, at that time, may provide additional guidance on the submission of written statements that are in response to the stated agenda for the planned meeting in question.

Dated: April 15, 2015.

Aaron Siegel,

Alternate OSD Federal Register Liaison Officer, Department of Defense.

[FR Doc. 2015–08977 Filed 4–17–15; 8:45 am]

BILLING CODE 5001–06–P

DEPARTMENT OF ENERGY

President's Council of Advisors on Science and Technology

AGENCY: Office of Science, Department of Energy.

ACTION: Notice of partially-closed meeting.

SUMMARY: This notice sets forth the schedule and summary agenda for a partially-closed meeting of the President's Council of Advisors on Science and Technology (PCAST). The Federal Advisory Committee Act (Pub. L. 92–463, 86 Stat. 770) requires that public notice of these meetings be announced in the **Federal Register**.

DATES: May 15, 2015, 9:00 a.m. to 12:00 p.m.

ADDRESSES: The meeting will be held at the National Academy of Sciences, 2101 Constitution Avenue NW., Washington, DC in the Lecture Room.

FOR FURTHER INFORMATION CONTACT: Information regarding the meeting agenda, time, location, and how to register for the meeting is available on the PCAST Web site at: *http://whitehouse.gov/ostp/pcast.* A live video webcast and an archive of the webcast after the event are expected to be available at *http://whitehouse.gov/ostp/pcast.* The archived video will be available within one week of the meeting. Questions about the meeting should be directed to Dr. Ashley Predith at *apredith@ostp.eop.gov,* (202) 456–4444. Please note that public seating for this meeting is limited and is available on a first-come, first-served basis.

SUPPLEMENTARY INFORMATION: The President's Council of Advisors on Science and Technology (PCAST) is an advisory group of the nation's leading scientists and engineers, appointed by the President to augment the science and technology advice available to him from inside the White House, cabinet departments, and other Federal agencies. See the Executive Order at *http://www.whitehouse.gov/ostp/pcast.* PCAST is consulted about and provides analyses and recommendations concerning a wide range of issues where understandings from the domains of science, technology, and innovation may bear on the policy choices before the President. PCAST is co-chaired by Dr. John P. Holdren, Assistant to the President for Science and Technology, and Director, Office of Science and Technology Policy, Executive Office of the President, The White House; and Dr. Eric S. Lander, President, Broad Institute of the Massachusetts Institute of Technology and Harvard.

Type of Meeting: Partially Closed.

Proposed Schedule and Agenda: The President's Council of Advisors on Science and Technology (PCAST) is scheduled to meet in open session on May 15, 2015 from 9:00 a.m. to 12:00 p.m.

Open Portion of Meeting: During this open meeting, PCAST is scheduled to hear from speakers about the Quadrennial Energy Review and about the Precision Medicine Initiative. The Council will discuss and hear remarks about reimagining business roles to address significant societal challenges. Additional information and the agenda, including any changes that arise, will be posted at the PCAST Web site at: *http://whitehouse.gov/ostp/pcast.*

Closed Portion of the Meeting: PCAST may hold a closed meeting of approximately 1 hour with the President on May 15, 2015, which must take place in the White House for the President's scheduling convenience and to maintain Secret Service protection. This meeting will be closed to the public because such portion of the meeting is likely to disclose matters that are to be kept secret in the interest of national defense or foreign policy under 5 U.S.C. 552b(c)(1).

Public Comments: It is the policy of the PCAST to accept written public comments of any length, and to accommodate oral public comments whenever possible. The PCAST expects that public statements presented at its meetings will not be repetitive of previously submitted oral or written statements.

The public comment period for this meeting will take place on May 15, 2015 at a time specified in the meeting agenda posted on the PCAST Web site at *http://whitehouse.gov/ostp/pcast.* This public comment period is designed only for substantive commentary on PCAST's work, not for business marketing purposes.

Oral Comments: To be considered for the public speaker list at the meeting, interested parties should register to speak at *http://whitehouse.gov/ostp/pcast,* no later than 12:00 p.m. Eastern Time on May 7, 2015. Phone or email reservations will not be accepted. To accommodate as many speakers as possible, the time for public comments will be limited to two (2) minutes per person, with a total public comment period of up to 15 minutes. If more speakers register than there is space available on the agenda, PCAST will randomly select speakers from among those who applied. Those not selected to present oral comments may always file written comments with the committee. Speakers are requested to bring at least 25 copies of their oral comments for distribution to the PCAST members.

Written Comments: Although written comments are accepted continuously, written comments should be submitted to PCAST no later than 12:00 p.m. Eastern Time on May 7, 2015 so that the comments may be made available to the PCAST members prior to this meeting for their consideration. Information regarding how to submit comments and documents to PCAST is available at *http://whitehouse.gov/ostp/pcast* in the section entitled ''Connect with PCAST.''

Please note that because PCAST operates under the provisions of FACA, all public comments and/or presentations will be treated as public documents and will be made available for public inspection, including being posted on the PCAST Web site.

Meeting Accommodations: Individuals requiring special accommodation to access this public meeting should contact Dr. Ashley Predith at least ten business days prior to the meeting so that appropriate arrangements can be made.

Issued in Washington, DC, on April 14, 2015.

LaTanya R. Butler,

Deputy Committee Management Officer.

[FR Doc. 2015–08981 Filed 4–17–15; 8:45 am]

BILLING CODE 6450–01–P

DEPARTMENT OF ENERGY

Environmental Management Site-Specific Advisory Board, Portsmouth

AGENCY: Department of Energy (DOE).

ACTION: Notice of open meeting.

SUMMARY: This notice announces a meeting of the Environmental Management Site-Specific Advisory Board (EM SSAB), Portsmouth. The Federal Advisory Committee Act (Pub. L. 92–463, 86 Stat. 770) requires that public notice of this meeting be announced in the **Federal Register**.

DATES: Thursday, May 7, 2015, 6:00 p.m.

ADDRESSES: Ohio State University, Endeavor Center, 1862 Shyville Road, Piketon, Ohio 45661.

FOR FURTHER INFORMATION CONTACT: Greg Simonton, Alternate Deputy Designated

Federal Officer, Department of Energy Portsmouth/Paducah Project Office, Post Office Box 700, Piketon, Ohio 45661, (740) 897–3737, *Greg.Simonton@lex.doe.gov.*

SUPPLEMENTARY INFORMATION:

Purpose of the Board: The purpose of the Board is to make recommendations to DOE–EM and site management in the areas of environmental restoration, waste management and related activities.

Tentative Agenda

- Call to Order, Introductions, Review of Agenda
- Approval of April Minutes
- Deputy Designated Federal Officer's Comments
- Federal Coordinator's Comments
- Liaison's Comments
- Presentation
- Administrative Issues
- Subcommittee Updates
- Public Comments
- Final Comments from the Board
- Adjourn

Public Participation: The meeting is open to the public. The EM SSAB, Portsmouth, welcomes the attendance of the public at its advisory committee meetings and will make every effort to accommodate persons with physical disabilities or special needs. If you require special accommodations due to a disability, please contact Greg Simonton at least seven days in advance of the meeting at the phone number listed above. Written statements may be filed with the Board either before or after the meeting. Individuals who wish to make oral statements pertaining to agenda items should contact Greg Simonton at the address or telephone number listed above. Requests must be received five days prior to the meeting and reasonable provision will be made to include the presentation in the agenda. The Deputy Designated Federal Officer is empowered to conduct the meeting in a fashion that will facilitate the orderly conduct of business. Individuals wishing to make public comments will be provided a maximum of five minutes to present their comments. This notice is being published less than 15 days prior to the meeting date due to programmatic issues that had to be resolved prior to the meeting date.

Minutes: Minutes will be available by writing or calling Greg Simonton at the address and phone number listed above. Minutes will also be available at the following Web site: *http://www.ports-ssab.energy.gov/.*

Issued at Washington, DC, on April 14, 2015.

LaTanya R. Butler,

Deputy Committee Management Officer.

[FR Doc. 2015–08980 Filed 4–17–15; 8:45 am]

BILLING CODE 6450–01–P

DEPARTMENT OF ENERGY

Federal Energy Regulatory Commission

Combined Notice of Filings #1

Take notice that the Commission received the following electric corporate filings:

Docket Numbers: EC15–101–000.
Applicants: American Transmission Company LLC.
Description: Clarifying Non-Substantive Amendment to March 23, 2015 Application for Authority to Acquire Transmission Facilities Under Section 203 of the FPA of American Transmission Company LLC.
Filed Date: 4/9/15.
Accession Number: 20150409–5209.
Comments Due: 5 p.m. ET 4/20/15.

Docket Numbers: EC15–120–000.
Applicants: Sierra Solar Greenworks LLC.
Description: Application for Authorization Under Section 203 of the Federal Power Act, Request for Expedited Consideration and Confidential Treatment.
Filed Date: 4/10/15.
Accession Number: 20150410–5300.
Comments Due: 5 p.m. ET 5/1/15.

Take notice that the Commission received the following electric rate filings:

Docket Numbers: ER15–623–001.
Applicants: PJM Interconnection, L.L.C.
Description: Tariff Amendment per 35.17(b): Response to Deficiency Letter in ER15–623, to be effective 4/1/2015.
Filed Date: 4/10/15.
Accession Number: 20150410–5277.
Comments Due: 5 p.m. ET 4/24/15.

Docket Numbers: ER15–929–003.
Applicants: Southwest Power Pool, Inc.
Description: Tariff Amendment per 35.17(b): Amendment to Oklahoma Municipal Power Authority Revised Stated Rate in ER15–929 to be effective 4/1/2015.
Filed Date: 4/10/15.
Accession Number: 20150410–5282.
Comments Due: 5 p.m. ET 5/1/15.

Docket Numbers: ER15–943–001.
Applicants: Midcontinent Independent System Operator, Inc.
Description: Compliance filing per 35: 2015–04–13_SA 6502 Illinois Power-Edwards SSR Renewal Compliance Filing to be effective 1/1/2015.
Filed Date: 4/13/15.
Accession Number: 20150413–5165.
Comments Due: 5 p.m. ET 5/4/15.

Docket Numbers: ER15–1496–000.
Applicants: 2014 ESA Project Company, LLC.
Description: Initial rate filing per 35.12 2014 ESA Project Company, LLC—MBR Filing to be effective 4/13/2015.
Filed Date: 4/13/15.
Accession Number: 20150413–5063.
Comments Due: 5 p.m. ET 5/4/15.

Docket Numbers: ER15–1497–000.
Applicants: Southern California Edison Company.
Description: Section 205(d) rate filing per 35.13(a)(2)(iii): Boomer Solar LLC 5 GIAs and SAs to be effective 4/14/2015.
Filed Date: 4/13/15.
Accession Number: 20150413–5221.
Comments Due: 5 p.m. ET 5/4/15.

The filings are accessible in the Commission's eLibrary system by clicking on the links or querying the docket number.

Any person desiring to intervene or protest in any of the above proceedings must file in accordance with Rules 211 and 214 of the Commission's Regulations (18 CFR 385.211 and 385.214) on or before 5:00 p.m. Eastern time on the specified comment date. Protests may be considered, but intervention is necessary to become a party to the proceeding.

eFiling is encouraged. More detailed information relating to filing requirements, interventions, protests, service, and qualifying facilities filings can be found at: *http://www.ferc.gov/docs-filing/efiling/filing-req.pdf.* For other information, call (866) 208–3676 (toll free). For TTY, call (202) 502–8659.

Dated: April 13, 2015.

Nathaniel J. Davis, Sr.,

Deputy Secretary.

[FR Doc. 2015–08952 Filed 4–17–15; 8:45 am]

BILLING CODE 6717–01–P

ENVIRONMENTAL PROTECTION AGENCY

[FRL–9926–45–Region–1]

Notice of Availability of Final NPDES General Permits MAG070000 And NHG070000 for Discharges From Dewatering Activities in the Commonwealth of Massachusetts and the State of New Hampshire: The Dewatering General Permit (DGP)

AGENCY: Environmental Protection Agency (EPA).

ACTION: Notice of Availability of Final NPDES General Permits MAG070000 And NHG070000.

SUMMARY: The Director of the Office of Ecosystem Protection, EPA-New England, is providing a notice of availability of final National Pollutant Discharge Elimination System (NPDES) general permits for dewatering activity discharges to certain waters of the Commonwealth of Massachusetts and the State of New Hampshire. These General Permits replace the Dewatering General Permits (DGP), which expired on September 30, 2013.

DATES: The DGP will be effective May 20, 2015 and will expire five years from the effective date. In accordance with 40 CFR part 23, this permit shall be considered issued for the purpose of judicial review on May 4, 2015. Under section 509(b) of the Clean Water Act, judicial review can be had by filing a petition for review in the United States Court of Appeals within 120 days after the permit is considered issued for purposes of judicial review. Under section 509(b)(2) of the Clean Water Act, the requirements in this permit may not be challenged later in civil or criminal proceedings to enforce these requirements. In addition, this permit may not be challenged in other agency proceedings.

ADDRESSES: The required notice of intent (NOI) information to obtain permit coverage is provided in the DGP. This information shall be submitted to EPA. NOIs may be submitted electronically or via mail at the addresses provided below:

(1) Email: *GeneralPermit.Dewatering@epa.gov.*

(2) Mail: Victor Alvarez, U.S. EPA—Region 1, 5 Post Office Square—Suite 100, Mail Code OEP06–4, Boston, MA 02109–3912.

FOR FURTHER INFORMATION CONTACT: Additional information concerning the final General Permits may be obtained between the hours of 9 a.m. and 5 p.m. Monday through Friday, excluding holidays, from Victor Alvarez, Office of Ecosystem Protection, 5 Post Office Square—Suite 100, Boston, MA 02109–3912; telephone: 617–918–1572; email: *alvarez.victor@epa.gov*

SUPPLEMENTARY INFORMATION: EPA is reissuing two general permits for the discharge of uncontaminated water from construction dewatering intrusion and/or stormwater accumulation from sites that disturb less than one acre of land and short and long term dewatering of foundation sumps. While the final general permits are two distinct permits, for convenience, EPA has grouped them together in a single document and has provided a single fact sheet for the two draft general permits. This document refers to the final general ''permit'' in the singular. The final general permit, appendices and fact sheet are available at: *http://www.epa.gov/region1/npdes/dewatering.html.*

The General Permit establishes Notice of Intent (NOI) requirements, effluent limitations, standards, prohibitions, and management practices for facilities with construction dewatering of groundwater intrusion and/or storm water accumulation from sites less than one acre and short-term and long-term dewatering of foundation sumps.

The draft permit includes effluent limitations based on best professional judgment (BPJ) and water quality considerations. When EPA has not promulgated effluent limitations for a category of discharges, or if an operator discharges a pollutant not covered by an effluent limitation guideline, effluent limitations may be based on the BPJ of the agency or permit writer. The BPJ limits in the general permit are in the form of non-numeric control measures, commonly referred to as best management practices (BMPs). The effluent limits established in the draft permit assures that the surface water quality standards of the receiving water are protected, maintained and/or attained. Discharges that contain pollutants in quantities which represent reasonable potential to cause or contribute to violations of water quality standards will not be granted coverage under this general permit. Those dischargers must either apply for an individual permit or seek coverage under EPA's Remediation General Permit.

Other Legal Requirements

Endangered Species Act (ESA)

The ESA provisions have been updated from the 2008 general permit and new species of concern have been added. EPA has received concurrence from U.S Fish and Wildlife Service and National Marine Fisheries Service in connection with this final permit.

Authority: This action is being taken under the Clean Water Act, 33 U.S.C. 1251 *et seq.*

Dated: March 31, 2015.

H. Curtis Spalding,

Regional Administrator.

[FR Doc. 2015–09015 Filed 4–17–15; 8:45 am]

BILLING CODE 6560–50–P

ENVIRONMENTAL PROTECTION AGENCY

[EPA–HQ–OPPT–2014–0486; FRL 9926–21–OEI]

Information Collection Request Submitted to OMB for Review and Approval; Comment Request; Lead; Clearance and Clearance Testing Requirements for the Renovation, Repair, and Painting Program (Renewal)

AGENCY: Environmental Protection Agency (EPA).

ACTION: Notice.

SUMMARY: The Environmental Protection Agency (EPA) has submitted a new information collection request (ICR), ''Lead; Clearance and Clearance Testing Requirements for the Renovation, Repair, and Painting Program'' (EPA ICR No. 2381.03, OMB Control No. 2070–0181) to the Office of Management and Budget (OMB) for review and approval in accordance with the Paperwork Reduction Act (44 U.S.C. 3501 *et seq.*). This is a proposed extension of the ICR, which is currently approved through April 30, 2015. Public comments were previously requested via the **Federal Register** (79 FR 78084) on December 29, 2014, during a 60-day comment period. This notice allows for an additional 30 days for public comments. A full description of the ICR is given below, including its estimated burden and cost to the public. An agency may not conduct or sponsor and a person is not required to respond to a collection of information unless it displays a currently valid OMB control number.

DATES: Additional comments may be submitted on or before May 20, 2015.

ADDRESSES: Submit your comments, referencing Docket ID Number EPA–HQ–OPPT–2014–0486, to (1) EPA online using *http://www.regulations.gov* (our preferred method), by email to *oppt.ncic@epa.gov,* or by mail to: EPA Docket Center, Environmental Protection Agency, Mail Code 28221T, 1200 Pennsylvania Ave. NW., Washington, DC 20460, and (2) OMB via email to *oira_submission@omb.eop.gov.* Address comments to OMB Desk Officer for EPA.

EPA's policy is that all comments received will be included in the public docket without change including any personal information provided, unless the comment includes profanity, threats, information claimed to be Confidential Business Information (CBI) or other information whose disclosure is restricted by statute.

FOR FURTHER INFORMATION CONTACT: Colby Lintner, Environmental

Assistance Division, Office of Pollution Prevention and Toxics, Mail code: 7408–M, Environmental Protection Agency, 1200 Pennsylvania Ave. NW., Washington, DC 20460; telephone number: 202–554–1404; fax number: 202–564–8251; email address: *TSCA-Hotline@epa.gov.*

SUPPLEMENTARY INFORMATION: Supporting documents, which explain in detail the information that the EPA will be collecting, are available in the public docket for this ICR. The docket can be viewed online at *http://www.regulations.gov* or in person at the EPA Docket Center, WJC West, Room 3334, 1301 Constitution Ave. NW., Washington, DC. The telephone number for the Docket Center is 202–566–1744. For additional information about EPA's public docket, visit *http://www.epa.gov/dockets.*

Abstract: This information collection request (ICR) covers revisions to the 2008 Renovation, Repair, and Painting (RRP) rule, which established reporting and recordkeeping requirements for individuals and firms conducting renovations in target housing (most housing constructed before 1978) and child-occupied facilities (pre-1978 residential, public, or commercial buildings where children under age six are regularly present). EPA revised the RRP rule under the authority of sections 402, 404 and 407 of the Toxic Substances Control Act (TSCA). This ICR describes and analyzes the incremental changes to the reporting and recordkeeping requirements under another existing approved ICR (EPA ICR No. 1715.12, OMB Control No. 2070–0155).

Responses to the collection of information are mandatory (see 40 CFR 745, Subpart L). Respondents may claim all or part of a response confidential. EPA will disclose information that is covered by a claim of confidentiality only to the extent permitted by, and in accordance with, the procedures in TSCA section 14 and 40 CFR part 2.

Form Numbers: 8500–25; 8500–27.

Respondents/affected entities: Persons who provide training in lead-based paint activities and/or renovation, persons who are engaged in lead-based paint activities and/or renovation, and state agencies that administer lead-based paint activities and/or renovation programs.

Respondent's obligation to respond: Mandatory.

Estimated number of respondents: 170 (total).

Frequency of response: On occasion.

Total estimated burden: 151 hours per year. Burden is defined at 5 CFR 1320.03(b).

Total estimated cost: $27 per year, includes $0 annualized capital or operation and maintenance costs.

Changes in the Estimates: There is no change in the total estimated respondent burden compared with that identified in the ICR currently approved by OMB.

Courtney Kerwin,

Acting Director, Collection Strategies Division.

[FR Doc. 2015–08983 Filed 4–17–15; 8:45 am]

BILLING CODE 6560–50–P

ENVIRONMENTAL PROTECTION AGENCY

[FRL–9926–42–OGC]

Proposed Consent Decree, Clean Air Act Citizen Suit

AGENCY: Environmental Protection Agency (EPA).

ACTION: Notice of proposed consent decree; request for public comment.

SUMMARY: In accordance with section 113(g) of the Clean Air Act, as amended, (''CAA'' or the ''Act''), notice is hereby given of a proposed consent decree to address a lawsuit filed by American Fuel & Petrochemical Manufacturers and American Petroleum Institute (collectively ''Plaintiffs''): *American Fuel & Petrochemical Manufacturers, et al.* v. *EPA,* No. 1:15-cv-394 (D. DC). In this lawsuit, Plaintiffs allege that EPA has failed to meet the CAA requirement that the Agency establish renewable fuel obligations applicable to calendar years 2014 and 2015. They also allege that EPA failed to timely approve or disapprove Plaintiffs' petition requesting that EPA waive in part the CAA applicable volumes of renewable fuel for calendar year 2014. The proposed consent decree establishes deadlines for EPA to take proposed and final action regarding renewable fuel obligations for 2015, a deadline for EPA to take final action regarding renewable fuel obligations for 2014 and a deadline for EPA to approve or disapprove Plaintiffs' petition seeking a partial waiver of CAA renewable fuel applicable volumes for 2014.

DATES: Written comments on the proposed consent decree must be received by *May 20, 2015.*

ADDRESSES: Submit your comments, identified by Docket ID number EPA–HQ–OGC–2015–0261, online at *www.regulations.gov* (EPA's preferred method); by email to *oei.docket@epa.gov;* by mail to EPA Docket Center, Environmental Protection Agency, Mailcode: 2822T, 1200 Pennsylvania Ave. NW., Washington, DC 20460–0001; or by hand delivery or courier to EPA Docket Center, EPA West, Room 3334, 1301 Constitution Ave. NW., Washington, DC, between 8:30 a.m. and 4:30 p.m. Monday through Friday, excluding legal holidays. Comments on a disk or CD–ROM should be formatted in Word or ASCII file, avoiding the use of special characters and any form of encryption, and may be mailed to the mailing address above.

FOR FURTHER INFORMATION CONTACT: Roland Dubois, Air and Radiation Law Office (2344A), Office of General Counsel, U.S. Environmental Protection Agency, 1200 Pennsylvania Ave. NW., Washington, DC 20460; telephone: (202) 564–5626; email address: *dubois.roland@epa.gov.*

SUPPLEMENTARY INFORMATION:

I. Additional Information About the Proposed Consent Decree

The proposed consent decree would resolve the lawsuit filed by Plaintiffs by establishing that EPA must take proposed action by June 1, 2015 and final action by November 30, 2015 to address renewable fuel obligations under CAA 211(o) for calendar year 2015. In addition, the proposed decree would establish that EPA must take final action by November 30, 2015 to address renewable fuel obligations for calendar year 2014 and to approve or disapprove Plaintiffs' petition seeking a partial waiver of renewable fuel applicable volumes set forth in CAA 211(o)(2) for calendar year 2014. See the proposed consent decree for the specific details.

For a period of thirty (30) days following the date of publication of this notice, the Agency will accept written comments relating to the proposed consent decree from persons who were not named as parties or interveners to the litigation in question. EPA or the Department of Justice may withdraw or withhold consent to the proposed consent decree if the comments disclose facts or considerations that indicate that such consent is inappropriate, improper, inadequate, or inconsistent with the requirements of the Act. Unless EPA or the Department of Justice determines that consent to this consent decree should be withdrawn, the terms of the decree will be affirmed.

II. Additional Information About Commenting on the Proposed Consent Decree

A. How can I get a copy of the consent decree?

The official public docket for this action (identified by Docket ID No. EPA–HQ–OGC–2015–0261) contains a

copy of the proposed consent decree. The official public docket is available for public viewing at the Office of Environmental Information (OEI) Docket in the EPA Docket Center, EPA West, Room 3334, 1301 Constitution Ave. NW., Washington, DC. The EPA Docket Center Public Reading Room is open from 8:30 a.m. to 4:30 p.m., Monday through Friday, excluding legal holidays. The telephone number for the Public Reading Room is (202) 566–1744, and the telephone number for the OEI Docket is (202) 566–1752.

An electronic version of the public docket is available through *www.regulations.gov.* You may use *www.regulations.gov* to submit or view public comments, access the index listing of the contents of the official public docket, and to access those documents in the public docket that are available electronically. Once in the system, key in the appropriate docket identification number then select ''search''.

It is important to note that EPA's policy is that public comments, whether submitted electronically or in paper, will be made available for public viewing online at *www.regulations.gov* without change, unless the comment contains copyrighted material, information that is claimed as confidential business information (CBI), or other information whose disclosure is restricted by statute. Information claimed as CBI and other information whose disclosure is restricted by statute is not included in the official public docket or in the electronic public docket. EPA's policy is that copyrighted material, including copyrighted material contained in a public comment, will not be placed in EPA's electronic public docket but will be available only in printed, paper form in the official public docket. Although not all docket materials may be available electronically, you may still access any of the publicly available docket materials through the EPA Docket Center.

B. How and to whom do i submit comments?

You may submit comments as provided in the **ADDRESSES** section. Please ensure that your comments are submitted within the specified comment period. Comments received after the close of the comment period will be marked ''late.'' EPA is not required to consider these late comments.

If you submit an electronic comment, EPA recommends that you include your name, mailing address, and an email address or other contact information in the body of your comment and with any disk or CD ROM you submit. This ensures that you can be identified as the submitter of the comment and allows EPA to contact you in case EPA cannot read your comment due to technical difficulties or needs further information on the substance of your comment. Any identifying or contact information provided in the body of a comment will be included as part of the comment that is placed in the official public docket, and made available in EPA's electronic public docket. If EPA cannot read your comment due to technical difficulties and cannot contact you for clarification, EPA may not be able to consider your comment.

Use of the *www.regulations.gov* Web site to submit comments to EPA electronically is EPA's preferred method for receiving comments. The electronic public docket system is an ''anonymous access'' system, which means EPA will not know your identity, email address, or other contact information unless you provide it in the body of your comment. In contrast to EPA's electronic public docket, EPA's electronic mail (email) system is not an ''anonymous access'' system. If you send an email comment directly to the Docket without going through *www.regulations.gov,* your email address is automatically captured and included as part of the comment that is placed in the official public docket, and made available in EPA's electronic public docket.

Dated: April 9, 2015.

Lorie J. Schmidt,

Associate General Counsel.

[FR Doc. 2015–09012 Filed 4–17–15; 8:45 am]

BILLING CODE 6560–50–P

ENVIRONMENTAL PROTECTION AGENCY

[FRL–9925–41–OEI]

Agency Information Collection Activities OMB Responses

AGENCY: Environmental Protection Agency (EPA).

ACTION: Notice.

SUMMARY: This document announces the Office of Management and Budget (OMB) responses to Agency Clearance requests, in compliance with the Paperwork Reduction Act (44 U.S.C. 3501 *et seq.*). An agency may not conduct or sponsor, and a person is not required to respond to, a collection of information unless it displays a currently valid OMB control number. The OMB control numbers for EPA regulations are listed in 40 CFR part 9 and 48 CFR chapter 15.

FOR FURTHER INFORMATION CONTACT: Courtney Kerwin (202) 566–1669, or email at *kerwin.courtney@epa.gov* and please refer to the appropriate EPA Information Collection Request (ICR) Number.

SUPPLEMENTARY INFORMATION:

OMB Responses to Agency Clearance Requests

OMB Approvals

EPA ICR Number 2260.05; Confidential Financial Disclosure Form for Special Government Employees Serving on Federal Advisory Committees at the U.S. Environmental Protection Agency (Renewal); 5 CFR part 2634; was approved with change on 2/25/2015; OMB Number 2090–0029; expires on 2/28/2018.

EPA ICR Number 0559.12; Application for Reference and Equivalent Method Determination (Renewal); 40 CFR parts 53.4, 53.14, 53.15, 53.9(f), (h), (i), and 53.16(a)–(d), (f); was approved without change on 2/25/2015; OMB Number 2080–0005; expires on 2/28/2018.

Comment Filed

EPA ICR Number 2347.01; Implementation of the 2008 National Ambient Air Quality Standards for Ozone: State Implementation Plan Requirements (Proposed Rule); 40 CFR part 51; OMB filed comment on 2/12/2015.

Courtney Kerwin,

Acting Director, Collections Strategies Division.

[FR Doc. 2015–08984 Filed 4–17–15; 8:45 am]

BILLING CODE 6560–50–P

GENERAL SERVICES ADMINISTRATION

[OMB Control No. 3090–0014;Docket 2015–0001; Sequence 8]

Information Collection; Transfer Order-Surplus Personal Property and Continuation Sheet, Standard Form (SF) 123

AGENCY: Federal Acquisition Service, General Services Administration (GSA).

ACTION: Notice of request for an extension to an existing OMB clearance.

SUMMARY: Under the provisions of the Paperwork Reduction Act, the Regulatory Secretariat Division will be submitting to the Office of Management and Budget (OMB) a request to review and approve an extension of a previously approved information collection requirement regarding the

Transfer Order—Surplus Personal Property and Continuation Sheet, Standard Form (SF) 123.

DATES: Submit comments on or before: June 19, 2015.

ADDRESSES: Submit comments identified by Information Collection 3090–0014, Transfer Order—Surplus Personal Property and Continuation Sheet, Standard Form (SF) 123, by any of the following methods:

- Regulations.gov: *http://www.regulations.gov.* Submit comments via the Federal eRulemaking portal by searching the OMB control number. Select the link ''Comment Now'' that corresponds with ''Information Collection 3090–0014, Transfer Order—Surplus Personal Property and Continuation Sheet, Standard Form (SF) 123''. Follow the instructions provided on the screen. Please include your name, company name (if any), and ''Information Collection 3090–0014, Transfer Order—Surplus Personal Property and Continuation Sheet, Standard Form (SF) 123,'' on your attached document.
- *Fax:* 202–501–4067.
- *Mail:* General Services Administration, Regulatory Secretariat Division (MVCB), 1800 F Street NW., Washington, DC 20405. ATTN: Ms. Flowers/IC 3090–0014.

Instructions: Please submit comments only and cite Information Collection 3090–0014, Transfer Order—Surplus Personal Property and Continuation Sheet, Standard Form (SF) 123, in all correspondence related to this collection. All comments received will be posted without change to *http://www.regulations.gov,* including any personal and/or business confidential information provided.

FOR FURTHER INFORMATION CONTACT: Joyce Spalding, Property Disposal Specialist, Federal Acquisition Service, at telephone 703–605–2888 or via email to *joyce.spalding@gsa.gov.*

SUPPLEMENTARY INFORMATION:

A. Purpose

The Transfer Order—Surplus Personal Property and Continuation Sheet, Standard form (SF) 123, is used by public agencies, nonprofit educational or public health activities, programs for the elderly, service educational activities, and public airports to apply for donation of Federal surplus personal property. The SF 123 serves as the transfer instrument and includes item descriptions, transportation instructions, nondiscrimination assurances, and approval signatures.

B. Annual Reporting Burden

Respondents: 20,110.
Responses per Respondent: 1.
Total Number of Respondents: 20,110.
Hours per Response: 0.019.
Total Burden Hours: 382.

C. Public Comments

Public comments are particularly invited on: Whether this collection of information is necessary and whether it will have practical utility; whether our estimate of the public burden of this collection of information is accurate, and based on valid assumptions and methodology; ways to enhance the quality, utility, and clarity of the information to be collected.

Obtaining Copies of Proposals: Requesters may obtain a copy of the information collection documents from the General Services Administration, Regulatory Secretariat Division (MVCB), 1800 F Street NW., Washington, DC 20006, telephone 202–501–4755. Please cite OMB Control No. 3090–0014, Transfer Order—Surplus Personal Property and Continuation Sheet, Standard Form (SF) 123, in all correspondence.

Dated: April 13, 2015.

David A. Shive,

Acting, Chief Information Officer.

[FR Doc. 2015–08994 Filed 4–17–15; 8:45 am]

BILLING CODE 6820–34–P

DEPARTMENT OF HEALTH AND HUMAN SERVICES

Centers for Medicare & Medicaid Services

[Document Identifier: CMS–179]

Agency Information Collection Activities: Proposed Collection; Comment Request

AGENCY: Centers for Medicare & Medicaid Services, HHS.

ACTION: Notice.

SUMMARY: The Centers for Medicare & Medicaid Services (CMS) is announcing an opportunity for the public to comment on CMS' intention to collect information from the public. Under the Paperwork Reduction Act of 1995 (the PRA), federal agencies are required to publish notice in the **Federal Register** concerning each proposed collection of information (including each proposed extension or reinstatement of an existing collection of information) and to allow 60 days for public comment on the proposed action. Interested persons are invited to send comments regarding our burden estimates or any other aspect of this collection of information, including any of the following subjects: The necessity and utility of the proposed information collection for the proper performance of the agency's functions; the accuracy of the estimated burden; ways to enhance the quality, utility, and clarity of the information to be collected; and the use of automated collection techniques or other forms of information technology to minimize the information collection burden.

DATES: Comments must be received by *June 19, 2015.*

ADDRESSES: When commenting, please reference the document identifier or OMB control number. To be assured consideration, comments and recommendations must be submitted in any one of the following ways:

1. *Electronically.* You may send your comments electronically to *http://www.regulations.gov.* Follow the instructions for ''Comment or Submission'' or ''More Search Options'' to find the information collection document(s) that are accepting comments.

2. *By regular mail.* You may mail written comments to the following address: CMS, Office of Strategic Operations and Regulatory Affairs, Division of Regulations Development, Attention: Document Identifier/OMB Control Number _____, Room C4–26–05, 7500 Security Boulevard, Baltimore, Maryland 21244–1850.

To obtain copies of a supporting statement and any related forms for the proposed collection(s) summarized in this notice, you may make your request using one of following:

1. Access CMS' Web site address at *http://www.cms.hhs.gov/PaperworkReductionActof1995.*

2. Email your request, including your address, phone number, OMB number, and CMS document identifier, to *Paperwork@cms.hhs.gov.*

3. Call the Reports Clearance Office at (410) 786–1326.

FOR FURTHER INFORMATION CONTACT: Reports Clearance Office at (410) 786–1326.

SUPPLEMENTARY INFORMATION:

Contents

This notice sets out a summary of the use and burden associated with the following information collections. More detailed information can be found in each collection's supporting statement and associated materials (see **ADDRESSES**).

CMS–179 State Plan Under Title XIX of the Social Security Act (Base Plan Pages, Attachments, Supplements to Attachments)

Under the PRA (44 U.S.C. 3501–3520), federal agencies must obtain approval from the Office of Management and Budget (OMB) for each collection of information they conduct or sponsor. The term ''collection of information'' is defined in 44 U.S.C. 3502(3) and 5 CFR 1320.3(c) and includes agency requests or requirements that members of the public submit reports, keep records, or provide information to a third party. Section 3506(c)(2)(A) of the PRA requires federal agencies to publish a 60-day notice in the **Federal Register** concerning each proposed collection of information, including each proposed extension or reinstatement of an existing collection of information, before submitting the collection to OMB for approval. To comply with this requirement, CMS is publishing this notice.

Information Collection

1. *Type of Information Collection Request:* Extension of a currently approved collection; *Title of Information Collection:* Medicaid State Plan Base Plan Pages; *Use:* State Medicaid agencies complete the plan pages while we review the information to determine if the state has met all of the requirements of the provisions the states choose to implement. If the requirements are met, we will approve the amendments to the state's Medicaid plan giving the state the authority to implement the flexibilities. For a state to receive Medicaid Title XIX funding, there must be an approved Title XIX state plan. *Form Number:* CMS–179 (OMB control number 0938–0193); *Frequency:* Occasionally; *Affected Public:* State, Local, and Tribal Governments; *Number of Respondents:* 56; *Total Annual Responses:* 1,120; *Total Annual Hours:* 22,400. (For policy questions regarding this collection contact Annette Pearson at 410–786–6958.)

Dated: April 15, 2015.

William N. Parham, III,

Director, Paperwork Reduction Staff, Office of Strategic Operations and Regulatory Affairs.

[FR Doc. 2015–09008 Filed 4–17–15; 8:45 am]

BILLING CODE 4120–01–P

DEPARTMENT OF HEALTH AND HUMAN SERVICES

Centers for Medicare & Medicaid Services

[Document Identifier: CMS–855R, CMS–10394, CMS–10371, CMS–10472 and CMS–10494]

Agency Information Collection Activities: Submission for OMB Review; Comment Request

ACTION: Notice.

SUMMARY: The Centers for Medicare & Medicaid Services (CMS) is announcing an opportunity for the public to comment on CMS' intention to collect information from the public. Under the Paperwork Reduction Act of 1995 (PRA), federal agencies are required to publish notice in the **Federal Register** concerning each proposed collection of information, including each proposed extension or reinstatement of an existing collection of information, and to allow a second opportunity for public comment on the notice. Interested persons are invited to send comments regarding the burden estimate or any other aspect of this collection of information, including any of the following subjects: (1) The necessity and utility of the proposed information collection for the proper performance of the agency's functions; (2) the accuracy of the estimated burden; (3) ways to enhance the quality, utility, and clarity of the information to be collected; and (4) the use of automated collection techniques or other forms of information technology to minimize the information collection burden.

DATES: Comments on the collection(s) of information must be received by the OMB desk officer by *May 20, 2015.*

ADDRESSES: When commenting on the proposed information collections, please reference the document identifier or OMB control number. To be assured consideration, comments and recommendations must be received by the OMB desk officer via one of the following transmissions: OMB, Office of Information and Regulatory Affairs, Attention: CMS Desk Officer, Fax Number: (202) 395–5806 *OR,* Email: *OIRA_submission@omb.eop.gov.*

To obtain copies of a supporting statement and any related forms for the proposed collection(s) summarized in this notice, you may make your request using one of following:

1. Access CMS' Web site address at *http://www.cms.hhs.gov/PaperworkReductionActof1995.*

2. Email your request, including your address, phone number, OMB number, and CMS document identifier, to *Paperwork@cms.hhs.gov.*

3. Call the Reports Clearance Office at (410) 786–1326.

FOR FURTHER INFORMATION CONTACT: Reports Clearance Office at (410) 786–1326.

SUPPLEMENTARY INFORMATION: Under the Paperwork Reduction Act of 1995 (PRA) (44 U.S.C. 3501–3520), federal agencies must obtain approval from the Office of Management and Budget (OMB) for each collection of information they conduct or sponsor. The term ''collection of information'' is defined in 44 U.S.C. 3502(3) and 5 CFR 1320.3(c) and includes agency requests or requirements that members of the public submit reports, keep records, or provide information to a third party. Section 3506(c)(2)(A) of the PRA (44 U.S.C. 3506(c)(2)(A)) requires federal agencies to publish a 30-day notice in the **Federal Register** concerning each proposed collection of information, including each proposed extension or reinstatement of an existing collection of information, before submitting the collection to OMB for approval. To comply with this requirement, CMS is publishing this notice that summarizes the following proposed collection(s) of information for public comment:

1. *Type of Information Collection Request:* Revision of a currently approved collection; *Title of Information Collection:* Medicare Enrollment Application: Reassignment of Medicare Benefits; *Use:* The primary function of the CMS 855R enrollment application is to allow physicians and non-physician practitioners to reassign their Medicare benefits to a group practice and to gather information from the individual that tells us who he/she is, where he or she renders services, and information necessary to establish correct claims payment. The goal of periodically evaluating and revising the CMS–855R enrollment application is to simplify and clarify the information collection without jeopardizing our need to collect specific information. At this time, CMS is making very few minor revisions to the CMS–855R (Reassignment of Benefits) Medicare enrollment application (OMB No. 0938–1179). Two sections within the form are being reversed to maintain sync with online and paper forms. The previously approved CMS 855R section 2 collected information regarding the individual practitioner who is reassigning benefits and section 3 collected information regarding the organization/group receiving the reassigned benefits. These two sections have been reversed so that section 2 now collects information on

the regarding the organization/group receiving the reassigned benefits and section 3 now collects information on the individual practitioner who is reassigning benefits. No information or data collection within these sections was revised. The sections were merely re-sequenced and re-numbered to maintain sync between online and paper forms. With the exception of this section reversal and adding the word ''optional'' to sections 4 and 5 (primary practice location and contact person information), there are no other revisions. These revisions offer no new data collection in this revision package. The addition of the optional choice in sections 4 and 5 could potentially reduce the burden to providers who choose not to complete either or both optional sections. *Form Number:* CMS–855R (OMB control number 0938–1179); *Frequency:* Occasionally; *Affected Public:* State, Local, or Tribal Governments, Private sector (For-profit and Not-for-profit institutions); *Number of Respondents:* 379,619; *Total Annual Responses:* 379,619; *Total Annual Hours:* 94,905. (For policy questions regarding this collection contact Kim McPhillips at 410–786–7278).

2. *Type of Information Collection Request:* Extension of a currently approved collection; *Title of Information Collection:* Application to Be a Qualified Entity to Receive Medicare Data for Performance Measurement; *Use:* Section 10332 of the Patient Protection and Affordable Care Act (ACA) requires the Secretary to make standardized extracts of Medicare claims data under parts A, B, and D available to ''qualified entities'' for the evaluation of the performance of providers of services and suppliers. The statute provides the Secretary with discretion to establish criteria to determine whether an entity is qualified to use claims data to evaluate the performance of providers of services and suppliers. We are proposing at section 42 CFR 401.703 to evaluate an organization's eligibility across three areas: Organizational and governance capabilities, addition of claims data from other sources (as required in the statute), and data privacy and security. This is the application through which organizations will provide information to CMS to determine whether they will be approved as a qualified entity. *Form Number:* CMS–10394 (OMB control number: 0938–1144); *Frequency:* Occasionally; *Affected Public:* Private sector—Business or other for-profits and Not-for-profit institutions; *Number of Respondents:* 35; *Total Annual Responses:* 35; *Total Annual Hours:* 6,833. (For policy questions regarding this collection contact Kari Gaare at 410–786–8612).

3. *Type of Information Collection Request:* Revision of a currently approved information collection; *Title of Information Collection:* Cooperative Agreements to Support Establishment of State-Operated Health Insurance Exchanges; *Use:* All States (including the 50 States, consortia of States, and the District of Columbia herein referred to as States) had the opportunity under section 1311(b) of the Affordable Care to apply for three types of grants: (1) Planning grants; (2) Early Innovator grants for early development of information technology; and (3) Establishment grants to develop, implement and start-up Marketplaces. As of January 1st, 2015, the Secretary has disbursed over $5.4 billion under this grant program and, as of that date, there were 79 active establishment grants awarded to 28 states. As the State-Based Marketplaces (SBM) and Small Business Health Options Program (SHOP) have matured and moved from the developmental phases to full-operation, the reporting requirements for the states have been modified and streamlined to insure only information necessary to provide effective oversight of their operations by CMS is collected.

Given the innovative nature of Exchanges and the statutorily-prescribed relationship between the Secretary and States in their development and operation, it is critical that the Secretary work closely with States to provide necessary guidance and technical assistance to ensure that States can meet the prescribed timelines, federal requirements, and goals of the statute and the grants awarded to them. *Form Number:* CMS–10371 (OMB control number: 0938–1119); *Frequency:* Once; *Affected Public:* State Government agencies, Private sector (Not-for-profit institutions); *Number of Respondents:* 28; *Number of Responses:* 48; *Total Annual Hours:* 31,404. (For policy questions regarding this collection, contact Dena Puskin at (301) 492–4342.)

4. *Type of Information Collection Request:* Revision of a previously approved information collection; *Title of Information Collection:* Exchange Functions: Standards for Navigators and Non-Navigator Assistance Personnel; *Use:* Section 1321(a)(1) of the Affordable Care Act directs and authorizes the Secretary to issue regulations setting standards for meeting the requirements under title I of the Affordable Care Act, with respect to, among other things, the establishment and operation of Exchanges. Pursuant to this authority, regulations have been finalized at 45 CFR 155.215(b)(1) to require Navigators, as well as those non-Navigator personnel to whom 45 CFR 155.215 applies, requires completion of HHS approved training for initial certification and annual recertification prior to providing application and enrollment assistance. The training will include an optional training quality survey providing Navigators and non-Navigator assistance personnel to whom 45 CFR 155.215 applies, an opportunity to provide feedback to CMS regarding the training and any improvements that can be made in the future. *Form Number:* CMS–10472 (OMB control number. 0938–1220); *Frequency:* On Occasion; *Affected Public:* State, Local, or Tribal Governments, Private sector (Not-for-profit institutions), Individuals or Households; *Number of Respondents:* 5,610; *Number of Responses:* 5,610; *Total Annual Hours:* 37,036. (For policy questions regarding this collection, contact Heather Raeburn at 301–492–4224.)

5. *Type of Information Collection Request:* Revision of a previously approved information collection; *Title of Information Collection:* Patient Protection and Affordable Care Act; Consumer Assistance Tools and Programs of an Exchange and Certified Application Counselors; Exchange and Insurance Market Standards for 2015; *Use:* Section 1321(a)(1) of the Affordable Care Act directs and authorizes the Secretary to issue regulations setting standards for meeting the requirements under title I of the Affordable Care Act, with respect to, among other things, the establishment and operation of Exchanges. Pursuant to this authority, regulations establishing the certified application counselor program have been finalized at 45 CFR 155.225. In accordance with 155.225(d)(1) and (7), certified application counselors in all Exchanges are required to be initially certified and recertified on at least an annual basis and successfully complete Exchange-required training. *Form Number:* CMS–10494 (OMB control number: 0938–1205); *Frequency:* On Occasion; *Affected Public:* State, Local, or Tribal Governments, Private sector (Not-for-profit institutions), Individuals or Households; *Number of Respondents:* 35,000; *Number of Responses:* 190,000; *Total Annual Hours:* 27,110. (For policy questions regarding this collection, contact Tricia Beckmann at 301–492–4328.)

Dated: April 15, 2015.

William N. Parham, III,

Director, Paperwork Reduction Staff, Office of Strategic Operations and Regulatory Affairs.

[FR Doc. 2015–09009 Filed 4–17–15; 8:45 am]

BILLING CODE 4120–01–P

DEPARTMENT OF HEALTH AND HUMAN SERVICES

Administration for Community Living

Applications for New Awards; National Institute on Disability, Independent Living, and Rehabilitation Research—Rehabilitation Research and Training Centers

AGENCY: Administration for Community Living, Department of Health and Human Services.

ACTION: Notice.

Overview Information: National Institute on Disability, Independent Living, and Rehabilitation Research (NIDILRR)—Rehabilitation Research and Training Centers (RRTC)—Employer Practices Leading to Successful Employment Outcomes for Individuals with Disabilities.

Notice inviting applications for new awards for fiscal year (FY) 2015.

Catalog of Federal Domestic Assistance (CFDA) Number: 84.133B–1.

DATES: *Applications Available: April 20, 2015.*

Note: On July 22, 2014, President Obama signed the Workforce Innovation Opportunity Act (WIOA). WIOA was effective immediately. One provision of WIOA transferred the National Institute on Disability and Rehabilitation Research (NIDRR) from the Department of Education to the Administration for Community Living (ACL) in the Department of Health and Human Services. In addition, NIDRR's name was changed to the Institute on Disability, Independent Living, and Rehabilitation Research (NIDILRR). For FY 2015, all NIDILRR priority notices will be published as ACL notices, and ACL will make all NIDILRR awards. During this transition period, however, NIDILRR will continue to review grant applications using Department of Education tools. NIDILRR will post previously-approved application kits to grants.gov, and NIDILRR applications submitted to grants.gov will be forwarded to the Department of Education's G–5 system for peer review. We are using Department of Education application kits and peer review systems during this transition year in order to provide for a smooth and orderly process for our applicants.

Date of Pre-Application Meeting: May 11, 2015.

Deadline for Notice of Intent to Apply: May 26, 2015.

Deadline for Transmittal of Applications: June 19, 2015.

Full Text of Announcement

I. Funding Opportunity Description

Purpose of Program: The purpose of the Disability and Rehabilitation Research Projects and Centers Program is to plan and conduct research, demonstration projects, training, and related activities, including international activities to develop methods, procedures, and rehabilitation technology. The Program's activities are designed to maximize the full inclusion and integration into society, employment, independent living, family support, and economic and social self-sufficiency of individuals with disabilities, especially individuals with the most severe disabilities, and to improve the effectiveness of services authorized under the Rehabilitation Act of 1973, as amended (Rehabilitation Act).

Rehabilitation Research and Training Centers

The purpose of the RRTCs, which are funded through the Disability and Rehabilitation Research Projects and Centers Program, is to achieve the goals of, and improve the effectiveness of, services authorized under the Rehabilitation Act through well-designed research, training, technical assistance, and dissemination activities in important topical areas as specified by NIDILRR. These activities are designed to benefit rehabilitation service providers, individuals with disabilities, family members, policymakers and other research stakeholders. Additional information on the RRTC program can be found at: *http://www2.ed.gov/programs/rrtc/index.html#types.*

Priorities: There are two priorities for the grant competition announced in this notice. The General RRTC Requirements priority is from the notice of final priorities for the Rehabilitation Research and Training Centers, published in the **Federal Register** on February 1, 2008 (73 FR 6132). Priority two is from the notice of final priority for this program, published elsewhere in this issue of the **Federal Register**.

Absolute Priorities: For FY 2015 and any subsequent year in which we make awards from the list of unfunded applicants from this competition, these priorities are absolute priorities. Under 45 CFR part 75 we consider only applications that meet these program priorities.

These priorities are:

Priority 1—General RRTC Requirements.

Note: The full text of this priority is included in the notice of final priorities for the Rehabilitation Research and Training Centers, published in the **Federal Register** on February 1, 2008 (73 FR 6132) and in the application package for this competition.

Priority 2—RRTC on Employer Practices Leading to Successful Employment Outcomes for Individuals with Disabilities.

Note: The full text of this priority is included in the notice of final priority published elsewhere in this issue of the **Federal Register** and in the application package for this competition.

Program Authority: 29 U.S.C. 762(g) and 764(b)(2).

Applicable Regulations: (a) The Department of Health and Human Services General Administrative Regulations in 45 CFR part 75; (b) Audit Requirements for Federal Awards in 45 CFR part 75 Subpart F; (c) 45 CFR part 75 Non-procurement Debarment and Suspension; (d) 45 CFR part 75 Requirement for Drug-Free Workplace (Financial Assistance); (e) The regulations for this program in 34 CFR part 350; (f) The notice of final priorities for the RRTC Program published in the **Federal Register** on February 1, 2008 (73 FR 6132); and (g) The notice of final priority for this program, published elsewhere in this issue of the **Federal Register**.

II. Award Information

Type of Award: Discretionary grants.

Estimated Available Funds: $875,000.

Contingent upon the availability of funds and the quality of applications, we may make additional awards in FY 2015 and any subsequent year from the list of unfunded applicants from this competition.

Maximum Award: $875,000.

We will reject any application that proposes a budget exceeding the Maximum Amount for a single budget period of 12 months. The Administrator of the Administration for Community Living may change the maximum amount through a notice published in the **Federal Register**.

Estimated Number of Awards: 1.

The Department is not bound by any estimates in this notice.

Project Period: 60 months.

We will reject any application that proposes a project period exceeding 60 months. The Administrator of the Administration for Community Living may change the project period through a notice published in the **Federal Register**.

III. Eligibility Information

1. *Eligible Applicants:* States; public or private agencies, including for-profit

agencies; public or private organizations, including for-profit organizations; IHEs; and Indian tribes and tribal organizations.

2. *Cost Sharing or Matching:* This competition does not require cost sharing or matching.

IV. Application and Submission Information

1. *Address to Request Application Package:* You can obtain an application package via grants.gov, or by contacting Patricia Barrett: U.S. Department of Health and Human Services, 400 Maryland Avenue SW., room 5142, PCP, Washington, DC 20202–2700. Telephone: (202) 245–6211 or by email: *patricia.barrett@acl.hhs.gov.*

If you request an application from Patricia Barrett, be sure to identify this competition as follows: CFDA number 84.133B–1.

2. *Content and Form of Application Submission:* Requirements concerning the content of an application, together with the forms you must submit, are in the application package for the competition announced in this notice.

Notice of Intent to Apply: Due to the open nature of the RRTC priority announced here, and to assist with the selection of reviewers for this competition, NIDILRR is requesting all potential applicants submit a letter of intent (LOI). The submission is not mandatory and the content of the LOI will not be peer reviewed or otherwise used to rate an applicant's application.

Each LOI should be limited to a maximum of four pages and include the following information: (1) The title of the proposed project, the name of the applicant, the name of the Project Director or Principal Investigator (PI), and the names of partner institutions and entities; (2) a brief statement of the vision, goals, and objectives of the proposed project and a description of its proposed activities at a sufficient level of detail to allow NIDILRR to select potential peer reviewers; (3) a list of proposed project staff including the Project Director or PI and key personnel; (4) a list of individuals whose selection as a peer reviewer might constitute a conflict of interest due to involvement in proposal development, selection as an advisory board member, co-PI relationships, etc.; and (5) contact information for the Project Director or PI. Submission of a LOI is not a prerequisite for eligibility to submit an application.

NIDILRR will accept the optional LOI via mail (through the U.S. Postal Service or commercial carrier) or email, by May 26, 2015. The LOI must be sent to: Patricia Barrett, U.S. Department of Health and Human Services, 550 12th Street SW., Room 5142, PCP, Washington, DC 20202; or by email to: *Patricia.Barrett@acl.hhs.gov.*

For further information regarding the LOI submission process, contact Patricia Barrett at (202) 245–6211.

Page Limit: The application narrative (Part III of the application) is where you, the applicant, address the selection criteria that reviewers use to evaluate your application. We recommend that you limit Part III to the equivalent of no more than 100 pages, using the following standards:

- A ''page'' is 8.5″ x 11″, on one side only, with 1″ margins at the top, bottom, and both sides.
- Double space (no more than three lines per vertical inch) all text in the application narrative. You are not required to double space titles, headings, footnotes, references, and captions, or text in charts, tables, figures, and graphs.
- Use a font that is either 12 point or larger or no smaller than 10 pitch (characters per inch).
- Use one of the following fonts: Times New Roman, Courier, Courier New, or Arial.

The recommended page limit does not apply to Part I, the cover sheet; Part II, the budget section, including the narrative budget justification; Part IV, the assurances and certifications; or the one-page abstract, the resumes, the bibliography, or the letters of support. However, the recommended page limit does apply to all of the application narrative section (Part III).

Note: Please submit an appendix that lists every collaborating organization and individual named in the application, including staff, consultants, contractors, and advisory board members. We will use this information to help us screen for conflicts of interest with our reviewers.

An applicant should consult NIDRR's Long-Range Plan for Fiscal Years 2013–2017 (78 FR 20299) (Plan) when preparing its application. The Plan is organized around the following research domains: (1) Community Living and Participation; (2) Health and Function; and (3) Employment.

3. *Submission Dates and Times:*

Applications Available: April 20, 2015.

Date of Pre-Application Meeting: Interested parties are invited to participate in a pre-application meeting and to receive information and technical assistance through individual consultation with NIDILRR staff. The pre-application meeting will be held on May 11, 2015. Interested parties may participate in this meeting by conference call with NIDILRR staff from the Administration for Community Living between 1:00 p.m. and 3:00 p.m., Washington, DC time. NIDILRR staff also will be available from 3:30 p.m. to 4:30 p.m., Washington, DC time, on the same day, by telephone, to provide information and technical assistance through individual consultation. For further information or to make arrangements to participate in the meeting via conference call or to arrange for an individual consultation, contact the person listed under **FOR FURTHER INFORMATION CONTACT** in section VII of this notice.

Deadline for Notice of Intent to Apply: May 26, 2015.

Deadline for Transmittal of Applications: June 19, 2015.

Applications for grants under this competition must be submitted electronically using the Grants.gov Apply site (Grants.gov). For information (including dates and times) about how to submit your application electronically, or in paper format by mail delivery if you qualify for an exception to the electronic submission requirement, please refer to section IV. 7. *Other Submission Requirements* of this notice.

We do not consider an application that does not comply with the deadline requirements.

Individuals with disabilities who need an accommodation or auxiliary aid in connection with the application process should contact the person listed under **FOR FURTHER INFORMATION CONTACT** in section VII of this notice. If the Department provides an accommodation or auxiliary aid to an individual with a disability in connection with the application process, the individual's application remains subject to all other requirements and limitations in this notice.

4. *Intergovernmental Review:* This program is not subject to Executive Order 12372.

5. *Funding Restrictions:* We reference regulations outlining funding restrictions in the *Applicable Regulations* section of this notice.

6. *Data Universal Numbering System Number, Taxpayer Identification Number, and System for Award Management:* To do business with the Department of Health and Human Services, you must—

a. Have a Data Universal Numbering System (DUNS) number and a Taxpayer Identification Number (TIN);

b. Register both your DUNS number and TIN with the System for Award Management (SAM) (formerly the Central Contractor Registry (CCR)), the

Government's primary registrant database;

c. Provide your DUNS number and TIN on your application; and

d. Maintain an active SAM registration with current information while your application is under review by the Department and, if you are awarded a grant, during the project period.

You can obtain a DUNS number from Dun and Bradstreet. A DUNS number can be created within one-to-two business days.

If you are a corporate entity, agency, institution, or organization, you can obtain a TIN from the Internal Revenue Service. If you are an individual, you can obtain a TIN from the Internal Revenue Service or the Social Security Administration. If you need a new TIN, please allow two to five weeks for your TIN to become active.

The SAM registration process can take approximately seven business days, but may take upwards of several weeks, depending on the completeness and accuracy of the data entered into the SAM database by an entity. Thus, if you think you might want to apply for Federal financial assistance under a program administered by the Department, please allow sufficient time to obtain and register your DUNS number and TIN. We strongly recommend that you register early.

Note: Once your SAM registration is active, you will need to allow 24 to 48 hours for the information to be available in Grants.gov and before you can submit an application through Grants.gov.

If you are currently registered with SAM, you may not need to make any changes. However, please make certain that the TIN associated with your DUNS number is correct. Also note that you will need to update your registration annually. This may take three or more business days.

Information about SAM is available at *www.SAM.gov.* To further assist you with obtaining and registering your DUNS number and TIN in SAM or updating your existing SAM account, we have prepared a SAM.gov Tip Sheet, which you can find at: *http://www2.ed.gov/fund/grant/apply/sam-faqs.html.*

In addition, if you are submitting your application via Grants.gov, you must: (1) Be designated by your organization as an Authorized Organization Representative (AOR); and (2) register yourself with Grants.gov as an AOR. Details on these steps are outlined at the following Grants.gov Web page: *www.grants.gov/web/grants/register.html.*

7. *Other Submission Requirements:* Applications for grants under this competition must be submitted electronically unless you qualify for an exception to this requirement in accordance with the instructions in this section.

a. *Electronic Submission of Applications.*

Applications for grants under Employer Practices Leading to Successful Employment Outcomes for Individuals with Disabilities, CFDA Number 84.133B–1, must be submitted electronically using the Governmentwide Grants.gov Apply site at *www.Grants.gov.* Through this site, you will be able to download a copy of the application package, complete it offline, and then upload and submit your application. You may not email an electronic copy of a grant application to us.

We will reject your application if you submit it in paper format unless, as described elsewhere in this section, you qualify for one of the exceptions to the electronic submission requirement *and* submit, no later than two weeks before the application deadline date, a written statement to the Department that you qualify for one of these exceptions. Further information regarding calculation of the date that is two weeks before the application deadline date is provided later in this section under *Exception to Electronic Submission Requirement.*

You may access the electronic grant application for the RRTC on Employer Practices Leading to Successful Employment Outcomes for Individuals with Disabilities competition at*www.Grants.gov.* You must search for the downloadable application package for this competition by the CFDA number. Do not include the CFDA number's alpha suffix in your search (*e.g.,* search for 84.133, not 84.133B).

Please note the following:

- When you enter the Grants.gov site, you will find information about submitting an application electronically through the site, as well as the hours of operation.
- Applications received by Grants.gov are date and time stamped. Your application must be fully uploaded and submitted and must be date and time stamped by the Grants.gov system no later than 4:30:00 p.m., Washington, DC time, on the application deadline date. Except as otherwise noted in this section, we will not accept your application if it is received—that is, date and time stamped by the Grants.gov system—after 4:30:00 p.m., Washington, DC time, on the application deadline date. We do not consider an application that does not comply with the deadline requirements. When we retrieve your application from Grants.gov, we will notify you if we are rejecting your application because it was date and time stamped by the Grants.gov system after 4:30:00 p.m., Washington, DC time, on the application deadline date.
- The amount of time it can take to upload an application will vary depending on a variety of factors, including the size of the application and the speed of your Internet connection. Therefore, we strongly recommend that you do not wait until the application deadline date to begin the submission process through Grants.gov.
- You should review and follow the Education Submission Procedures for submitting an application through Grants.gov that are included in the application package for this competition to ensure that you submit your application in a timely manner to the Grants.gov system. You can also find the Education Submission Procedures pertaining to Grants.gov under News and Events on the Department's G5 system home page at *http://www.G5.gov.*
- You will not receive additional point value because you submit your application in electronic format, nor will we penalize you if you qualify for an exception to the electronic submission requirement, as described elsewhere in this section, and submit your application in paper format.
- You must submit all documents electronically, including all information you typically provide on the following forms: The Application for Federal Assistance (SF 424), the Department of Education Supplemental Information for SF 424, Budget Information—Non-Construction Programs (ED 524), and all necessary assurances and certifications.
- You must upload any narrative sections and all other attachments to your application as files in a PDF (Portable Document) read-only, non-modifiable format. Do not upload an interactive or fillable PDF file. If you upload a file type other than a read-only, non-modifiable PDF or submit a password-protected file, we will not review that material. Additional, detailed information on how to attach files is in the application instructions.
- Your electronic application must comply with any page-limit requirements described in this notice.
- After you electronically submit your application, you will receive from Grants.gov an automatic notification of receipt that contains a Grants.gov tracking number. (This notification indicates receipt by Grants.gov only, not receipt by the Department.) The Department then will retrieve your application from Grants.gov and send a second notification to you by email.

This second notification indicates that the Department has received your application and has assigned your application a PR/Award number (an ED-specified identifying number unique to your application).

• We may request that you provide us original signatures on forms at a later date.

Application Deadline Date Extension in Case of Technical Issues with the Grants.gov System: If you are experiencing problems submitting your application through Grants.gov, please contact the Grants.gov Support Desk, toll free, at 1–800–518–4726. You must obtain a Grants.gov Support Desk Case Number and must keep a record of it.

If you are prevented from electronically submitting your application on the application deadline date because of technical problems with the Grants.gov system, we will grant you an extension until 4:30:00 p.m., Washington, DC time, the following business day to enable you to transmit your application electronically. You also may mail your application by following the mailing instructions described elsewhere in this notice.

If you submit an application after 4:30:00 p.m., Washington, DC time, on the application deadline date, please contact the person listed under **FOR FURTHER INFORMATION CONTACT** in section VII of this notice and provide an explanation of the technical problem you experienced with Grants.gov, along with the Grants.gov Support Desk Case Number. We will accept your application if we can confirm that a technical problem occurred with the Grants.gov system and that the problem affected your ability to submit your application by 4:30:00 p.m., Washington, DC time, on the application deadline date. The Department will contact you after a determination is made on whether your application will be accepted.

Note: The extensions to which we refer in this section apply only to the unavailability of, or technical problems with, the Grants.gov system. We will not grant you an extension if you failed to fully register to submit your application to Grants.gov before the application deadline date and time or if the technical problem you experienced is unrelated to the Grants.gov system.

Exception to Electronic Submission Requirement: You qualify for an exception to the electronic submission requirement, and may submit your application in paper format, if you are unable to submit an application through the Grants.gov system because—

• You do not have access to the Internet; or

• You do not have the capacity to upload large documents to the Grants.gov system; *and*

• No later than two weeks before the application deadline date (14 calendar days or, if the fourteenth calendar day before the application deadline date falls on a Federal holiday, the next business day following the Federal holiday), you mail or fax a written statement to the Department, explaining which of the two grounds for an exception prevents you from using the Internet to submit your application.

If you mail your written statement to the Department, it must be postmarked no later than two weeks before the application deadline date. If you fax your written statement to the Department, we must receive the faxed statement no later than two weeks before the application deadline date.

Address and mail or fax your statement to: Patricia Barrett, U.S. Department of Health and Human Services, 400 Maryland Avenue SW., Room 5142, Potomac Center Plaza (PCP), Washington, DC 20202–2700. FAX: (202) 245–7323.

Your paper application must be submitted in accordance with the mail instructions described in this notice.

b. *Submission of Paper Applications by Mail.*

If you qualify for an exception to the electronic submission requirement, you may mail (through the U.S. Postal Service or a commercial carrier) your application to the Department. You must mail the original and two copies of your application, on or before the application deadline date, to the Department at the following address: U.S. Department of Education, Application Control Center, Attention: (CFDA Number 84.133B–1) 550 12th Street SW., Room 7041, Potomac Center Plaza, Washington, DC 20202–4260.

You must show proof of mailing consisting of one of the following:

(1) A legibly dated U.S. Postal Service postmark.

(2) A legible mail receipt with the date of mailing stamped by the U.S. Postal Service.

(3) A dated shipping label, invoice, or receipt from a commercial carrier.

(4) Any other proof of mailing acceptable to the Administrator of the Administration for Community Living of the U.S. Department of Health and Human Services.

If you mail your application through the U.S. Postal Service, we do not accept either of the following as proof of mailing:

(1) A private metered postmark.

(2) A mail receipt that is not dated by the U.S. Postal Service.

If your application is postmarked after the application deadline date, we will not consider your application.

Note: The U.S. Postal Service does not uniformly provide a dated postmark. Before relying on this method, you should check with your local post office.

Note for Mail of Paper Applications If you mail your application to the Department—

(1) You must indicate on the envelope and—if not provided by the Department—in Item 11 of the SF 424 the CFDA number, including suffix letter, if any, of the program under which you are submitting your application; and

(2) The Application Control Center will mail to you a notification of receipt of your grant application. If you do not receive this notification within 15 business days from the application deadline date, you should call the U.S. Department of Education Application Control Center at (202) 245–6288.

V. Application Review Information

1. *Selection Criteria:* The selection criteria for this program are from 34 CFR 350.54 and are listed in the application package.

2. *Review and Selection Process:* Final award decisions will be made by the Administrator, ACL. In making these decisions, the Administrator will take into consideration: Ranking of the review panel; reviews for programmatic and grants management compliance; the reasonableness of the estimated cost to the government considering the available funding and anticipated results; and the likelihood that the proposed project will result in the benefits expected. Under section 75.205, item (3) history of performance is an item that is reviewed.

In addition, in making a competitive grant award, the Administrator of the Administration for Community Living also requires various assurances including those applicable to Federal civil rights laws that prohibit discrimination in programs or activities receiving Federal financial assistance from the Department of Health and Human Services 45 CFR part 75.

3. *Special Conditions:* Under 45 CFR part 75 the Administrator of the Administration for Community Living may impose special conditions on a grant if the applicant or grantee is not financially stable; has a history of unsatisfactory performance; has a financial or other management system that does not meet the standards in 45 CFR part 75, as applicable; has not fulfilled the conditions of a prior grant; or is otherwise not responsible.

VI. Award Administration Information

1. *Award Notices:* If your application is successful, we send you a Notice of

Award (NOA); or we may send you an email containing a link to access an electronic version of your NOA. We may notify you informally, also.

If your application is not evaluated or not selected for funding, we notify you.

2. *Administrative and National Policy Requirements:* We identify administrative and national policy requirements in the application package and reference these and other requirements in the *Applicable Regulations* section of this notice.

We reference the regulations outlining the terms and conditions of an award in the *Applicable Regulations* section of this notice and include these and other specific conditions in the NOA. The NOA also incorporates your approved application as part of your binding commitments under the grant.

3. *Reporting:* (a) If you apply for a grant under this competition, you must ensure that you have in place the necessary processes and systems to comply with the reporting requirements in 45 CFR part 75 should you receive funding under the competition. This does not apply if you have an exception under 45 CFR part 75.

(b) At the end of your project period, you must submit a final performance report, including financial information, as directed by the Administrator of the Administration for Community Living. If you receive a multi-year award, you must submit an annual performance report that provides the most current performance and financial expenditure information as directed by the Administrator of the Administration for Community Living under 45 CFR part 75. All NIDILRR grantees will submit their annual and final reports through NIDILRR's online reporting system and as designated in the terms and conditions of your NOA. The Administrator of the Administration for Community Living may also require more frequent performance reports under 45 CFR part 75. For specific requirements on reporting, please go to *www.ed.gov/fund/grant/apply/appforms/appforms.html.*

(c) FFATA and FSRS Reporting

The Federal Financial Accountability and Transparency Act (FFATA) requires data entry at the FFATA Subaward Reporting System (*http://www.FSRS.gov*) for all sub-awards and sub-contracts issued for $25,000 or more as well as addressing executive compensation for both grantee and sub-award organizations.

For further guidance please see the following link: *http://www.acl.gov/Funding_Opportunities/Grantee_Info/FFATA.aspx.*

If you receive a multi-year award, you must submit an annual performance report that provides the most current performance and financial expenditure information. Annual and Final Performance reports will be submitted through NIDILRR's online Performance System and as designated in the terms and conditions of your NOA. At the end of your project period, you must submit a final performance report, including financial information.

Note: NIDILRR will provide information by letter to successful grantees on how and when to submit the report.

4. *Performance Measures:* To evaluate the overall success of its research program, NIDILRR assesses the quality of its funded projects through a review of grantee performance and accomplishments. Each year, NIDILRR examines a portion of its grantees to determine:

- The number of products (*e.g.,* new or improved tools, methods, discoveries, standards, interventions, programs, or devices developed or tested with NIDILRR funding) that have been judged by expert panels to be of high quality and to advance the field.
- The average number of publications per award based on NIDILRR-funded research and development activities in refereed journals.
- The percentage of new NIDILRR grants that assess the effectiveness of interventions, programs, and devices using rigorous methods.

NIDILRR uses information submitted by grantees as part of their Annual Performance Reports for these reviews.

5. *Continuation Awards:* In making a continuation award, the Administrator of the Administration for Community Living may consider, under 45 CFR part 75, the extent to which a grantee has made ''substantial progress toward meeting the objectives in its approved application.'' This consideration includes the review of a grantee's progress in meeting the targets and projected outcomes in its approved application, and whether the grantee has expended funds in a manner that is consistent with its approved application and budget. In making a continuation grant, the Administrator also considers whether the grantee is operating in compliance with the assurances in its approved application, including those applicable to Federal civil rights laws that prohibit discrimination in programs or activities receiving Federal financial assistance from the Department. Continuation funding is also subject to availability of funds.

VII. Agency Contact

FOR FURTHER INFORMATION CONTACT: Patricia Barrett, U.S. Department of Health and Human Services, 400 Maryland Avenue SW., Room 5142, PCP, Washington, DC 20202–2700. Telephone: (202) 245–6211 or by email: *patricia.barrett@acl.hhs.gov.*

If you use a TDD or a TTY, call the Federal Relay Service (FRS), toll free, at 1–800–877–8339.

VIII. Other Information

Electronic Access to This Document: The official version of this document is the document published in the **Federal Register**. Free Internet access to the official edition of the **Federal Register** and the Code of Federal Regulations is available via the Federal Digital System at: *www.gpo.gov/fdsys.* At this site you can view this document, as well as all other documents of this Department published in the **Federal Register**, in text or Adobe Portable Document Format (PDF). To use PDF you must have Adobe Acrobat Reader, which is available free at the site.

You may also access documents of the Department published in the **Federal Register** by using the article search feature at: *www.federalregister.gov.* Specifically, through the advanced search feature at this site, you can limit your search to documents published by the Department.

Dated: April 15, 2015.

John Tschida,

Director, National Institute on Disability, Independent Living, and Rehabilitation Research.

[FR Doc. 2015–09032 Filed 4–17–15; 8:45 am]

BILLING CODE 4154–01—P

DEPARTMENT OF HEALTH AND HUMAN SERVICES

Administration for Community Living

[CFDA Number: 84.133B–5]

Final Priority: National Institute on Disability, Independent Living, and Rehabilitation Research—Rehabilitation Research and Training Centers

AGENCY: Administration for Community Living, Department of Health and Human Services.

ACTION: Final priority.

SUMMARY: The Administrator of the Administration for Community Living announces a priority for the Rehabilitation Research and Training Center (RRTC) Program administered by the National Institute on Disability,

Independent Living, and Rehabilitation Research (NIDILRR). Specifically, we announce a priority for an RRTC on Employment for Individuals with Blindness or other Visual Impairments. The Administrator of the Administration for Community Living may use this priority for competitions in fiscal year (FY) 2015 and later years. We take this action to focus research attention on an area of national need. We intend for this priority to contribute to improved employment for individuals with blindness or other visual impairments.

DATES: *Effective Date:* This priority is effective May 20, 2015.

FOR FURTHER INFORMATION CONTACT: Patricia Barrett, U.S. Department of Health And Human Services, 400 Maryland Avenue SW., Room 5142, Potomac Center Plaza (PCP), Washington, DC 20202–2700. Telephone: (202) 245–6211 or by email: *patricia.barrett@acl.hhs.gov.*

If you use a telecommunications device for the deaf (TDD) or a text telephone (TTY), call the Federal Relay Service (FRS), toll free, at 1–800–877–8339.

SUPPLEMENTARY INFORMATION:

Purpose of Program: The purpose of the Disability and Rehabilitation Research Projects and Centers Program is to plan and conduct research, demonstration projects, training, and related activities, including international activities, to develop methods, procedures, and rehabilitation technology that maximize the full inclusion and integration into society, employment, independent living, family support, and economic and social self-sufficiency of individuals with disabilities, especially individuals with the most severe disabilities, and to improve the effectiveness of services authorized under the Rehabilitation Act of 1973, as amended (Rehabilitation Act).

Rehabilitation Research and Training Centers

The purpose of the RRTCs, which are funded through the Disability and Rehabilitation Research Projects and Centers Program, is to achieve the goals of, and improve the effectiveness of, services authorized under the Rehabilitation Act through well-designed research, training, technical assistance, and dissemination activities in important topical areas as specified by NIDILRR. These activities are designed to benefit rehabilitation service providers, individuals with disabilities, family members, policymakers and other research stakeholders. Additional information on the RRTC program can be found at: *http://www2.ed.gov/programs/rrtc/index.html#types.*

Program Authority: 29 U.S.C. 762(g) and 764(b)(2)(A).

Applicable Program Regulations: 34 CFR part 350.

We published a notice of proposed priority (NPP) for this program in the **Federal Register** on February 25, 2015 (80 FR 10099). That notice contained background information and our reasons for proposing the particular priority.

There are no differences between the proposed priority and this final priority.

Public Comment: In response to our invitation in the notice of proposed priority we did not receive any comments on the proposed priority.

Final Priority:

The Administrator of the Administration for Community Living establishes a priority for an RRTC to conduct research on Employment for Individuals with Blindness or other Visual Impairments. The purpose of the proposed RRTC is to conduct research that generates new knowledge about the efficacy of rehabilitative services and technology used to support improved employment outcomes of individuals with blindness or other visual impairments, including subpopulations that are the focus of this priority.

The RRTC must contribute to improving the employment outcomes of individuals with blindness or other visual impairments by:

(a) Conducting research on the efficacy of rehabilitation services and technology used to enhance employment outcomes of individuals with blindness or other visual impairments. Outcomes must include but are not limited to obtaining employment, retention, promotion, and quality of salary and benefits. The RRTC must focus its research on the target population of individuals with blindness or other visual impairments, including at least one of the following subpopulations of particular concern: (1) Individuals who are deaf-blind; (2) individuals with blindness or low vision related to traumatic brain injury; and (3) transition-age young people with blindness or other visual impairments;

(b) Generating new knowledge about how the outcomes of the services and technologies investigated in paragraph (a) vary with relevant variables such as service type, consumer characteristics, and provider characteristics;

(c) Focusing its research on one or more specific stages of research. If the RRTC is to conduct research that can be categorized under more than one of the research stages, or research that progresses from one stage to another, those stages should be clearly justified. (These stages and their definitions are provided at the end of the background statement section of the notice of proposed priority published in the **Federal Register** on February 25, 2015 (80 FR 10099));

(d) Serving as a national resource center related to employment for individuals with blindness or other visual impairments, their families, and other stakeholders by conducting knowledge translation, technical assistance, and training activities;

(e) Disseminating research-based information and materials related to improving the quality of services to individuals with blindness or other visual impairments; and

(f) Involving key stakeholder groups in the activities conducted under paragraphs (a) and (b) of this priority to promote the new knowledge generated by the RRTC.

Types of Priorities

When inviting applications for a competition using one or more priorities, we designate the type of each priority as absolute, competitive preference, or invitational through a notice in the **Federal Register**. The effect of each type of priority follows:

Absolute priority: Under an absolute priority, we consider only applications that meet the priority (34 CFR 75.105(c)(3)).

Competitive preference priority: Under a competitive preference priority, we give competitive preference to an application by: (1) Awarding additional points, depending on the extent to which the application meets the priority (45 CFR part 75); or (2) selecting an application that meets the priority over an application of comparable merit that does not meet the priority (45 CFR part 75).

Invitational priority: Under an invitational priority, we are particularly interested in applications that meet the priority. However, we do not give an application that meets the priority a preference over other applications (45 CFR part 75).

This notice does not preclude us from proposing additional priorities, requirements, definitions, or selection criteria, subject to meeting applicable rulemaking requirements.

Note: This notice does *not* solicit applications. In any year in which we choose to use this priority, we invite applications through a notice in the **Federal Register.**

Executive Orders 12866 and 13563

Regulatory Impact Analysis

Under Executive Order 12866, the Secretary must determine whether this regulatory action is ''significant'' and, therefore, subject to the requirements of the Executive order and subject to review by the Office of Management and Budget (OMB). Section 3(f) of Executive Order 12866 defines a ''significant regulatory action'' as an action likely to result in a rule that may—

(1) Have an annual effect on the economy of $100 million or more, or adversely affect a sector of the economy, productivity, competition, jobs, the environment, public health or safety, or State, local, or tribal governments or communities in a material way (also referred to as an ''economically significant'' rule);

(2) Create serious inconsistency or otherwise interfere with an action taken or planned by another agency;

(3) Materially alter the budgetary impacts of entitlement grants, user fees, or loan programs or the rights and obligations of recipients thereof; or

(4) Raise novel legal or policy issues arising out of legal mandates, the President's priorities, or the principles stated in the Executive order.

This final regulatory action is not a significant regulatory action subject to review by OMB under section 3(f) of Executive Order 12866.

We have also reviewed this final regulatory action under Executive Order 13563, which supplements and explicitly reaffirms the principles, structures, and definitions governing regulatory review established in Executive Order 12866. To the extent permitted by law, Executive Order 13563 requires that an agency—

(1) Propose or adopt regulations only upon a reasoned determination that their benefits justify their costs (recognizing that some benefits and costs are difficult to quantify);

(2) Tailor its regulations to impose the least burden on society, consistent with obtaining regulatory objectives and taking into account—among other things and to the extent practicable—the costs of cumulative regulations;

(3) In choosing among alternative regulatory approaches, select those approaches that maximize net benefits (including potential economic, environmental, public health and safety, and other advantages; distributive impacts; and equity);

(4) To the extent feasible, specify performance objectives, rather than the behavior or manner of compliance a regulated entity must adopt; and

(5) Identify and assess available alternatives to direct regulation, including economic incentives—such as user fees or marketable permits—to encourage the desired behavior, or provide information that enables the public to make choices.

Executive Order 13563 also requires an agency ''to use the best available techniques to quantify anticipated present and future benefits and costs as accurately as possible.'' The Office of Information and Regulatory Affairs of OMB has emphasized that these techniques may include ''identifying changing future compliance costs that might result from technological innovation or anticipated behavioral changes.''

We are issuing this final priority only on a reasoned determination that its benefits justify its costs. In choosing among alternative regulatory approaches, we selected those approaches that maximize net benefits. Based on the analysis that follows, the Administration for Community Living (ACL), Department of Health and Human Services believes that this regulatory action is consistent with the principles in Executive Order 13563.

We also have determined that this regulatory action does not unduly interfere with State, local, and tribal governments in the exercise of their governmental functions.

In accordance with both Executive orders, ACL assessed the potential costs and benefits, both quantitative and qualitative, of this regulatory action. The potential costs are those resulting from statutory requirements and those we have determined as necessary for administering the ACL's programs and activities.

The benefits of the Disability and Rehabilitation Research Projects and Centers Program have been well established over the years, as projects similar to the one envisioned by the final priority have been completed successfully, and the proposed priority will generate new knowledge through research. The new RRTC will generate, disseminate, and promote the use of new information that would improve outcomes for individuals with disabilities in the areas of community living and participation, employment, and health and function.

Electronic Access to This Document: The official version of this document is the document published in the **Federal Register**. Free Internet access to the official edition of the **Federal Register** and the Code of Federal Regulations is available via the Federal Digital System at: *www.gpo.gov/fdsys.* At this site you can view this document, as well as all other documents of ACL published in the **Federal Register**, in text or Adobe Portable Document Format (PDF). To use PDF you must have Adobe Acrobat Reader, which is available free at the site.

You may also access documents of the Department published in the **Federal Register** by using the article search feature at: *www.federalregister.gov.* Specifically, through the advanced search feature at this site, you can limit your search to documents published by the Department.

Dated: April 14, 2015.

John Tschida,

Director, National Institute on Disability, Independent Living, and Rehabilitation Research.

[FR Doc. 2015–09016 Filed 4–17–15; 8:45 am]

BILLING CODE 4154–01–P

DEPARTMENT OF HEALTH AND HUMAN SERVICES

Administration for Community Living

Final Priority: National Institute on Disability, Independent Living, and Rehabilitation Research—Rehabilitation Research and Training Centers

AGENCY: Administration for Community Living, Department of Health and Human Services.

ACTION: Final priority.

[CFDA Number: 84.133B–3]

SUMMARY: The Administrator of the Administration for Community Living announces a priority for the Rehabilitation Research and Training Center (RRTC) Program administered by the National Institute on Disability, Independent Living, and Rehabilitation Research (NIDILRR). Specifically, we announce a priority for an RRTC on Employment Policy and Measurement. The Administrator of the Administration for Community Living may use this priority for competitions in fiscal year (FY) 2015 and later years. We take this action to focus research attention on an area of national need. We intend for this priority to contribute to improved employment outcomes for individuals with disabilities.

DATES: *Effective Date:* This priority is effective May 20, 2015.

FOR FURTHER INFORMATION CONTACT: Patricia Barrett, U.S. Department of Health and Human Services, 400 Maryland Avenue SW., Room 5142, Potomac Center Plaza (PCP), Washington, DC 20202–2700. Telephone: (202) 245–6211 or by email: *patricia.barrett@acl.hhs.gov.*

If you use a telecommunications device for the deaf (TDD) or a text telephone (TTY), call the Federal Relay Service (FRS), toll free, at 1–800–877–8339.

SUPPLEMENTARY INFORMATION:

Purpose of Program: The purpose of the Disability and Rehabilitation Research Projects and Centers Program is to plan and conduct research, demonstration projects, training, and related activities, including international activities, to develop methods, procedures, and rehabilitation technology that maximize the full inclusion and integration into society, employment, independent living, family support, and economic and social self-sufficiency of individuals with disabilities, especially individuals with the most severe disabilities, and to improve the effectiveness of services authorized under the Rehabilitation Act of 1973, as amended (Rehabilitation Act).

Rehabilitation Research and Training Centers

The purpose of the RRTCs, which are funded through the Disability and Rehabilitation Research Projects and Centers Program, is to achieve the goals of, and improve the effectiveness of, services authorized under the Rehabilitation Act through well-designed research, training, technical assistance, and dissemination activities in important topical areas as specified by NIDILRR. These activities are designed to benefit rehabilitation service providers, individuals with disabilities, family members, policymakers and other research stakeholders. Additional information on the RRTC program can be found at: *http://www2.ed.gov/programs/rrtc/index.html#types.*

Program Authority: 29 U.S.C. 762(g) and 764(b)(2)(A).

Applicable Program Regulations: 34 CFR part 350.

We published a notice of proposed priority (NPP) for this program in the **Federal Register** on February 25, 2015 (80 FR 10099). That notice contained background information and our reasons for proposing the particular priority.

There are no differences between the proposed priority and this final priority.

Public Comment: In response to our invitation in the notice of proposed priority we did not receive any comments on the proposed priority.

Final Priority

The Administrator of the Administration for Community Living establishes a priority for an RRTC on Employment Policy and Measurement. The purpose of the proposed RRTC on Employment Policy and Measurement (RRTC–EPM) is to investigate the impact of Federal and State policies and programs on employment of individuals with disabilities, paying particular attention to the effects of program interactions. The RRTC–EPM will also examine new ways of measuring employment outcomes and facilitate the translation of research findings to guide policymaking and program administration. Applicants must identify targeted research questions in response to the problems identified below and propose rigorous research methodologies to answer these questions. Of particular interest is research that investigates the interaction between the Affordable Care Act (ACA), Social Security Disability Insurance (SSDI), and employment. The desired outcome of this investment is new knowledge about the effect of new or existing policies on employment-related decision-making of individuals with disabilities, and ultimately on rates and quality of employment by these individuals.

The RRTC must contribute to improving the employment outcomes of individuals with disabilities by:

(a) Generating new knowledge about the effects of program interactions on employment outcomes of individuals with disabilities, including but not necessarily limited to the interaction between Social Security disability benefit programs and the ACA. Specifically, the RRTC must generate new knowledge of the potential impacts of varied policy scenarios regarding the SSDI trust fund exhaustion on the employment and economic outcomes of individuals with disabilities.

(b) Developing reliable and valid methods of measuring employment outcomes for people with disabilities;

(c) Serving as a national resource center on policy issues that impact employment outcomes of individuals with disabilities, and

(d) Increasing incorporation of research findings from the RRTC into practice or policy by:

(1) Collaborating with stakeholder groups to develop, evaluate, or implement strategies to increase utilization of research findings;

(2) Conducting training and dissemination activities to facilitate the utilization of research findings by policymakers, employers, and individuals with disabilities; (3) Providing technical assistance to facilitate use of information produced by the RRTC research; and

(4) Collaborating and sharing information with other agencies across the Federal government. In addition, the RRTC must collaborate with appropriate NIDILRR-funded grantees, including knowledge translation grantees and grantees involved with employment research.

Types of Priorities

When inviting applications for a competition using one or more priorities, we designate the type of each priority as absolute, competitive preference, or invitational through a notice in the **Federal Register**. The effect of each type of priority follows:

Absolute priority: Under an absolute priority, we consider only applications that meet the priority (45 CFR part 75).

Competitive preference priority: Under a competitive preference priority, we give competitive preference to an application by: (1) Awarding additional points, depending on the extent to which the application meets the priority (45 CFR part 75); or (2) selecting an application that meets the priority over an application of comparable merit that does not meet the priority (45 CFR part 75).

Invitational priority: Under an invitational priority, we are particularly interested in applications that meet the priority. However, we do not give an application that meets the priority a preference over other applications (45 CFR part 75).

This notice does not preclude us from proposing additional priorities, requirements, definitions, or selection criteria, subject to meeting applicable rulemaking requirements.

Note: This notice does *not* solicit applications. In any year in which we choose to use this priority, we invite applications through a notice in the **Federal Register**.

Executive Orders 12866 and 13563

Regulatory Impact Analysis

Under Executive Order 12866, the Secretary must determine whether this regulatory action is ''significant'' and, therefore, subject to the requirements of the Executive order and subject to review by the Office of Management and Budget (OMB). Section 3(f) of Executive Order 12866 defines a ''significant regulatory action'' as an action likely to result in a rule that may—

(1) Have an annual effect on the economy of $100 million or more, or adversely affect a sector of the economy, productivity, competition, jobs, the environment, public health or safety, or State, local, or tribal governments or communities in a material way (also

referred to as an ''economically significant'' rule);

(2) Create serious inconsistency or otherwise interfere with an action taken or planned by another agency;

(3) Materially alter the budgetary impacts of entitlement grants, user fees, or loan programs or the rights and obligations of recipients thereof; or

(4) Raise novel legal or policy issues arising out of legal mandates, the President's priorities, or the principles stated in the Executive order.

This final regulatory action is not a significant regulatory action subject to review by OMB under section 3(f) of Executive Order 12866.

We have also reviewed this final regulatory action under Executive Order 13563, which supplements and explicitly reaffirms the principles, structures, and definitions governing regulatory review established in Executive Order 12866. To the extent permitted by law, Executive Order 13563 requires that an agency—

(1) Propose or adopt regulations only upon a reasoned determination that their benefits justify their costs (recognizing that some benefits and costs are difficult to quantify);

(2) Tailor its regulations to impose the least burden on society, consistent with obtaining regulatory objectives and taking into account—among other things and to the extent practicable—the costs of cumulative regulations;

(3) In choosing among alternative regulatory approaches, select those approaches that maximize net benefits (including potential economic, environmental, public health and safety, and other advantages; distributive impacts; and equity);

(4) To the extent feasible, specify performance objectives, rather than the behavior or manner of compliance a regulated entity must adopt; and

(5) Identify and assess available alternatives to direct regulation, including economic incentives—such as user fees or marketable permits—to encourage the desired behavior, or provide information that enables the public to make choices.

Executive Order 13563 also requires an agency ''to use the best available techniques to quantify anticipated present and future benefits and costs as accurately as possible.'' The Office of Information and Regulatory Affairs of OMB has emphasized that these techniques may include ''identifying changing future compliance costs that might result from technological innovation or anticipated behavioral changes.''

We are issuing this final priority only on a reasoned determination that its benefits justify its costs. In choosing among alternative regulatory approaches, we selected those approaches that maximize net benefits. Based on the analysis that follows, the Administration for Community Living (ACL), Department of Health and Human Services believes that this regulatory action is consistent with the principles in Executive Order 13563.

We also have determined that this regulatory action does not unduly interfere with State, local, and tribal governments in the exercise of their governmental functions.

In accordance with both Executive orders, ACL assessed the potential costs and benefits, both quantitative and qualitative, of this regulatory action. The potential costs are those resulting from statutory requirements and those we have determined as necessary for administering the ACL's programs and activities.

The benefits of the Disability and Rehabilitation Research Projects and Centers Program have been well established over the years, as projects similar to the one envisioned by the final priority have been completed successfully, and the proposed priority will generate new knowledge through research. The new RRTC will generate, disseminate, and promote the use of new information that would improve outcomes for individuals with disabilities in the areas of community living and participation, employment, and health and function.

Electronic Access to This Document: The official version of this document is the document published in the **Federal Register**. Free Internet access to the official edition of the **Federal Register** and the Code of Federal Regulations is available via the Federal Digital System at: *www.gpo.gov/fdsys.* At this site you can view this document, as well as all other documents of ACL published in the **Federal Register**, in text or Adobe Portable Document Format (PDF). To use PDF you must have Adobe Acrobat Reader, which is available free at the site.

You may also access documents of the Department published in the **Federal Register** by using the article search feature at: *www.federalregister.gov.* Specifically, through the advanced search feature at this site, you can limit your search to documents published by the Department.

Dated: April 14, 2015.

John Tschida,

Director, National Institute on Disability, Independent Living, and Rehabilitation Research.

[FR Doc. 2015–09028 Filed 4–17–15; 8:45 am]

BILLING CODE 41050–01–P

DEPARTMENT OF HEALTH AND HUMAN SERVICES

Administration for Community Living

[CFDA Number: 84.133B–1]

Final Priority: National Institute on Disability, Independent Living, and Rehabilitation Research—Rehabilitation Research and Training Centers

AGENCY: Administration for Community Living, Department of Health and Human Services.

ACTION: Final priority.

SUMMARY: The Administrator of the Administration for Community Living announces a priority for the Rehabilitation Research and Training Center (RRTC) Program administered by the National Institute on Disability, Independent Living, and Rehabilitation Research (NIDILRR). Specifically, we announce a priority for an RRTC on Employer Practices Leading to Successful Employment Outcomes for Individuals with Disabilities. The Administrator of the Administration for Community Living may use this priority for competitions in fiscal year (FY) 2015 and later years. We take this action to focus research attention on an area of national need. We intend for this priority to contribute to improved employment practices and successful employment outcomes for individuals with disabilities.

DATES: *Effective Date:* This priority is effective May 20, 2015.

FOR FURTHER INFORMATION CONTACT: Patricia Barrett, U.S. Department of Health And Human Services, 400 Maryland Avenue SW., Room 5142, Potomac Center Plaza (PCP), Washington, DC 20202–2700. Telephone: (202) 245–6211 or by email: *patricia.barrett@acl.hhs.gov.*

If you use a telecommunications device for the deaf (TDD) or a text telephone (TTY), call the Federal Relay Service (FRS), toll free, at 1–800–877–8339.

SUPPLEMENTARY INFORMATION:

Purpose of Program: The purpose of the Disability and Rehabilitation Research Projects and Centers Program is to plan and conduct research,

demonstration projects, training, and related activities, including international activities, to develop methods, procedures, and rehabilitation technology that maximize the full inclusion and integration into society, employment, independent living, family support, and economic and social self-sufficiency of individuals with disabilities, especially individuals with the most severe disabilities, and to improve the effectiveness of services authorized under the Rehabilitation Act of 1973, as amended (Rehabilitation Act).

Rehabilitation Research and Training Centers

The purpose of the RRTCs, which are funded through the Disability and Rehabilitation Research Projects and Centers Program, is to achieve the goals of, and improve the effectiveness of, services authorized under the Rehabilitation Act through well-designed research, training, technical assistance, and dissemination activities in important topical areas as specified by NIDILRR. These activities are designed to benefit rehabilitation service providers, individuals with disabilities, family members, policymakers and other research stakeholders. Additional information on the RRTC program can be found at: *http://www2.ed.gov/programs/rrtc/index.html#types.*

Program Authority: 29 U.S.C. 762(g) and 764(b)(2)(A).

Applicable Program Regulations: 34 CFR part 350.

We published a notice of proposed priority (NPP) for this program in the **Federal Register** on February 25, 2015 (80 FR 10099). That notice contained background information and our reasons for proposing the particular priority.

There are no differences between the proposed priority and this final priority.

Public Comment: In response to our invitation in the notice of proposed priority we did not receive any comments on the proposed priority.

Final Priority

The Administrator of the Administration for Community Living establishes a priority for an RRTC to conduct research on Employer Practices Leading to Successful Employment Outcomes for Individuals with Disabilities.

The purpose of the RRTC is to generate new knowledge about effective employer practices that support successful employment outcomes for individuals with disabilities. The RRTC must contribute to improving the employment outcomes of individuals with disabilities by:

(a) Identifying promising employer practices most strongly associated with desired employment outcomes for individuals with disabilities as well as the prevalence of these practices. Practices should include those related to the hiring, retention, and advancement of individuals with disabilities.

(b) Developing measures of employment outcomes that include hiring, retention, and advancement of individuals with disabilities. These measures must be developed for use by employers and other stakeholders. These measures may also include employment quality, such as, but not limited to, earnings, full- or part-time employment, or opportunities for on-the-job training. In developing these measures, the RRTC must collaborate with the NIDILRR-funded RRTC on Employment Policy and Measurement.

(c) Generating new knowledge of the effectiveness of promising employer practices by identifying or developing, and then implementing and evaluating pilot workplace program(s) based on practices identified in (a). This work should be conducted in employment settings in collaboration with employers, and should include:

(1) Implementation of practices that are particularly likely to be effective in improving employment outcomes for individuals with disabilities;

(2) Implementation of practices among different types of employers (*e.g.,* small v. large employers, private v. public sector employers);

(3) Collection of data using, but not limited to, outcome measures from (b) above.

(d) Focusing its research on one or more specific stages of research. If the RRTC is to conduct research that can be categorized under more than one of the research stages, or research that progresses from one stage to another, those stages should be clearly justified. (These stages and their definitions are provided at the end of the background statement section of the notice of proposed priority published in the **Federal Register** on February 25, 2015 (80 FR 10099).)

(e) Serving as a national resource center related to employment for individuals with disabilities, their families, and other stakeholders by conducting knowledge translation activities that include, but are not limited to:

(1) Providing information and technical assistance to employers, employment service providers, employer groups, individuals with disabilities and their representatives, and other key stakeholders;

(2) Providing training, including graduate, pre-service, and in-service training, to employers and employer groups, to facilitate more effective employer practices for individuals with disabilities. This training may be provided through conferences, workshops, public education programs, in-service training programs, and similar activities;

(3) Disseminating research-based information and materials related to increasing employment levels for individuals with disabilities; and

(4) Involving key stakeholder groups in the activities conducted under paragraphs (a) and (b) of this priority to promote the new knowledge generated by the RRTC.

Types of Priorities

When inviting applications for a competition using one or more priorities, we designate the type of each priority as absolute, competitive preference, or invitational through a notice in the **Federal Register**. The effect of each type of priority follows:

Absolute priority: Under an absolute priority, we consider only applications that meet the priority (45 CFR part 75).

Competitive preference priority: Under a competitive preference priority, we give competitive preference to an application by: (1) Awarding additional points, depending on the extent to which the application meets the priority (45 CFR part 75); or (2) selecting an application that meets the priority over an application of comparable merit that does not meet the priority (45 CFR part 75).

Invitational priority: Under an invitational priority, we are particularly interested in applications that meet the priority. However, we do not give an application that meets the priority a preference over other applications (45 CFR part 75).

This notice does not preclude us from proposing additional priorities, requirements, definitions, or selection criteria, subject to meeting applicable rulemaking requirements.

Note: This notice does *not* solicit applications. In any year in which we choose to use this priority, we invite applications through a notice in the **Federal Register**.

Executive Orders 12866 and 13563

Regulatory Impact Analysis

Under Executive Order 12866, the Secretary must determine whether this regulatory action is ''significant'' and, therefore, subject to the requirements of the Executive order and subject to

review by the Office of Management and Budget (OMB). Section 3(f) of Executive Order 12866 defines a ''significant regulatory action'' as an action likely to result in a rule that may—

(1) Have an annual effect on the economy of $100 million or more, or adversely affect a sector of the economy, productivity, competition, jobs, the environment, public health or safety, or State, local, or tribal governments or communities in a material way (also referred to as an ''economically significant'' rule);

(2) Create serious inconsistency or otherwise interfere with an action taken or planned by another agency;

(3) Materially alter the budgetary impacts of entitlement grants, user fees, or loan programs or the rights and obligations of recipients thereof; or

(4) Raise novel legal or policy issues arising out of legal mandates, the President's priorities, or the principles stated in the Executive order.

This final regulatory action is not a significant regulatory action subject to review by OMB under section 3(f) of Executive Order 12866.

We have also reviewed this final regulatory action under Executive Order 13563, which supplements and explicitly reaffirms the principles, structures, and definitions governing regulatory review established in Executive Order 12866. To the extent permitted by law, Executive Order 13563 requires that an agency—

(1) Propose or adopt regulations only upon a reasoned determination that their benefits justify their costs (recognizing that some benefits and costs are difficult to quantify);

(2) Tailor its regulations to impose the least burden on society, consistent with obtaining regulatory objectives and taking into account—among other things and to the extent practicable—the costs of cumulative regulations;

(3) In choosing among alternative regulatory approaches, select those approaches that maximize net benefits (including potential economic, environmental, public health and safety, and other advantages; distributive impacts; and equity);

(4) To the extent feasible, specify performance objectives, rather than the behavior or manner of compliance a regulated entity must adopt; and

(5) Identify and assess available alternatives to direct regulation, including economic incentives—such as user fees or marketable permits—to encourage the desired behavior, or provide information that enables the public to make choices.

Executive Order 13563 also requires an agency ''to use the best available techniques to quantify anticipated present and future benefits and costs as accurately as possible.'' The Office of Information and Regulatory Affairs of OMB has emphasized that these techniques may include ''identifying changing future compliance costs that might result from technological innovation or anticipated behavioral changes.''

We are issuing this final priority only on a reasoned determination that its benefits justify its costs. In choosing among alternative regulatory approaches, we selected those approaches that maximize net benefits. Based on the analysis that follows, the Administration for Community Living (ACL), Department of Health and Human Services believes that this regulatory action is consistent with the principles in Executive Order 13563.

We also have determined that this regulatory action does not unduly interfere with State, local, and tribal governments in the exercise of their governmental functions.

In accordance with both Executive orders, ACL assessed the potential costs and benefits, both quantitative and qualitative, of this regulatory action. The potential costs are those resulting from statutory requirements and those we have determined as necessary for administering the ACL's programs and activities.

The benefits of the Disability and Rehabilitation Research Projects and Centers Program have been well established over the years, as projects similar to the one envisioned by the final priority have been completed successfully, and the proposed priority will generate new knowledge through research. The new RRTC will generate, disseminate, and promote the use of new information that would improve outcomes for individuals with disabilities in the areas of community living and participation, employment, and health and function.

Electronic Access to This Document: The official version of this document is the document published in the **Federal Register**. Free Internet access to the official edition of the **Federal Register** and the Code of Federal Regulations is available via the Federal Digital System at: *www.gpo.gov/fdsys.* At this site you can view this document, as well as all other documents of ACL published in the **Federal Register**, in text or Adobe Portable Document Format (PDF). To use PDF you must have Adobe Acrobat Reader, which is available free at the site.

You may also access documents of the Department published in the **Federal Register** by using the article search feature at: *www.federalregister.gov.* Specifically, through the advanced search feature at this site, you can limit your search to documents published by the Department.

Dated: April 14, 2015.

John Tschida,

Director, National Institute on Disability, Independent Living, and Rehabilitation Research.

[FR Doc. 2015–09034 Filed 4–17–15; 8:45 am]

BILLING CODE 4154–01–P

DEPARTMENT OF HEALTH AND HUMAN SERVICES

Administration for Community Living

Applications for New Awards; National Institute on Disability, Independent Living, and Rehabilitation Research—Rehabilitation Research and Training Centers

AGENCY: Administration for Community Living, Department of Health and Human Services.

ACTION: Notice.

Overview Information:

National Institute on Disability, Independent Living, and Rehabilitation Research (NIDILRR)—Rehabilitation Research and Training Centers (RRTC)—Employment Policy and Measurement

Notice inviting applications for new awards for fiscal year (FY) 2015.

Catalog of Federal Domestic Assistance (CFDA) Number: 84.133B–3.

DATES: *Applications Available:* April 20, 2015.

Note: On July 22, 2014, President Obama signed the Workforce Innovation Opportunity Act (WIOA). WIOA was effective immediately. One provision of WIOA transferred the National Institute on Disability and Rehabilitation Research (NIDRR) from the Department of Education to the Administration for Community Living (ACL) in the Department of Health and Human Services. In addition, NIDRR's name was changed to the Institute on Disability, Independent Living, and Rehabilitation Research (NIDILRR). For FY 2015, all NIDILRR priority notices will be published as ACL notices, and ACL will make all NIDILRR awards. During this transition period, however, NIDILRR will continue to review grant applications using Department of Education tools. NIDILRR will post previously-approved application kits to grants.gov, and NIDILRR applications submitted to grants.gov will be forwarded to the Department of Education's G–5 system for peer review. We are using Department of Education application kits and peer review systems during this transition year in order to provide for a smooth and orderly process for our applicants.

Date of Pre-Application Meeting: May 11, 2015.

Deadline for Notice of Intent to Apply: May 26, 2015.

Deadline for Transmittal of Applications: June 19, 2015.

Full Text of Announcement

I. Funding Opportunity Description

Purpose of Program: The purpose of the Disability and Rehabilitation Research Projects and Centers Program is to plan and conduct research, demonstration projects, training, and related activities, including international activities to develop methods, procedures, and rehabilitation technology. The Program's activities are designed to maximize the full inclusion and integration into society, employment, independent living, family support, and economic and social self-sufficiency of individuals with disabilities, especially individuals with the most severe disabilities, and to improve the effectiveness of services authorized under the Rehabilitation Act of 1973, as amended (Rehabilitation Act).

Rehabilitation Research and Training Centers

The purpose of the RRTCs, which are funded through the Disability and Rehabilitation Research Projects and Centers Program, is to achieve the goals of, and improve the effectiveness of, services authorized under the Rehabilitation Act through well-designed research, training, technical assistance, and dissemination activities in important topical areas as specified by NIDILRR. These activities are designed to benefit rehabilitation service providers, individuals with disabilities, family members, policymakers and other research stakeholders. Additional information on the RRTC program can be found at: *http://www2.ed.gov/programs/rrtc/index.html#types.*

Priorities: There are two priorities for the grant competition announced in this notice. The General RRTC Requirements priority is from the notice of final priorities for the Rehabilitation Research and Training Centers, published in the **Federal Register** on February 1, 2008 (73 FR 6132). Priority two is from the notice of final priority for this program, published elsewhere in this issue of the **Federal Register**.

Absolute Priorities: For FY 2015 and any subsequent year in which we make awards from the list of unfunded applicants from this competition, these priorities are absolute priorities. Under 45 CFR part 75 we consider only applications that meet these program priorities.

These priorities are:

Priority 1—General RRTC Requirements.

Note: The full text of this priority is included in the notice of final priorities for the Rehabilitation Research and Training Centers, published in the **Federal Register** on February 1, 2008 (73 FR 6132) and in the application package for this competition.

Priority 2—RRTC on Employment Policy and Measurement.

Note: The full text of this priority is included in the notice of final priority published elsewhere in this issue of the **Federal Register** and in the application package for this competition.

Program Authority: 29 U.S.C. 762(g) and 764(b)(2).

Applicable Regulations: (a) The Department of Health and Human Services General Administrative Regulations in 45 CFR part 75; (b) Audit Requirements for Federal Awards in 45 CFR part 75, subpart F; (c) 45 CFR part 75 Non-procurement Debarment and Suspension; (d) 45 CFR part 75 Requirement for Drug-Free Workplace (Financial Assistance); (e) The regulations for this program in 34 CFR part 350; (f) The notice of final priorities for the RRTC Program published in the **Federal Register** on February 1, 2008 (73 FR 6132); and (g) The notice of final priority for this program, published elsewhere in this issue of the **Federal Register**.

II. Award Information

Type of Award: Discretionary grants.

Estimated Available Funds: $875,000.

Contingent upon the availability of funds and the quality of applications, we may make additional awards in FY 2015 and any subsequent year from the list of unfunded applicants from this competition.

Maximum Award: $875,000.

We will reject any application that proposes a budget exceeding the Maximum Amount for a single budget period of 12 months. The Administrator of the Administration for Community Living may change the maximum amount through a notice published in the **Federal Register**.

Estimated Number of Awards: 1.

The Department is not bound by any estimates in this notice.

Project Period: 60 months.

We will reject any application that proposes a project period exceeding 60 months. The Administrator of the Administration for Community Living may change the project period through a notice published in the **Federal Register**.

III. Eligibility Information

1. *Eligible Applicants:* States; public or private agencies, including for-profit agencies; public or private organizations, including for-profit organizations; IHEs; and Indian tribes and tribal organizations.

2. *Cost Sharing or Matching:* This competition does not require cost sharing or matching.

IV. Application and Submission Information

1. *Address to Request Application Package:* You can obtain an application package via grants.gov, or by contacting Patricia Barrett: U.S. Department of Health and Human Services, 400 Maryland Avenue SW., room 5142, PCP, Washington, DC 20202–2700. Telephone: (202) 245–6211 or by email: *patricia.barrett@acl.hhs.gov.*

If you request an application from Patricia Barrett, be sure to identify this competition as follows: CFDA number 84.133B–3.

2. *Content and Form of Application Submission:* Requirements concerning the content of an application, together with the forms you must submit, are in the application package for the competition announced in this notice.

Notice of Intent to Apply: Due to the open nature of the RRTC priority announced here, and to assist with the selection of reviewers for this competition, NIDILRR is requesting all potential applicants submit a letter of intent (LOI). The submission is not mandatory and the content of the LOI will not be peer reviewed or otherwise used to rate an applicant's application.

Each LOI should be limited to a maximum of four pages and include the following information: (1) The title of the proposed project, the name of the applicant, the name of the Project Director or Principal Investigator (PI), and the names of partner institutions and entities; (2) a brief statement of the vision, goals, and objectives of the proposed project and a description of its proposed activities at a sufficient level of detail to allow NIDILRR to select potential peer reviewers; (3) a list of proposed project staff including the Project Director or PI and key personnel; (4) a list of individuals whose selection as a peer reviewer might constitute a conflict of interest due to involvement in proposal development, selection as an advisory board member, co-PI relationships, etc.; and (5) contact information for the Project Director or PI. Submission of a LOI is not a prerequisite for eligibility to submit an application.

NIDILRR will accept the optional LOI via mail (through the U.S. Postal Service

or commercial carrier) or email, by May 26, 2015. The LOI must be sent to: Patricia Barrett, U.S. Department of Health and Human Services, 550 12th Street, SW., Room 5142, PCP, Washington, DC 20202; or by email to: *Patricia.Barrett@acl.hhs.gov.*

For further information regarding the LOI submission process, contact Patricia Barrett at (202) 245–6211.

Page Limit: The application narrative (Part III of the application) is where you, the applicant, address the selection criteria that reviewers use to evaluate your application. We recommend that you limit Part III to the equivalent of no more than 100 pages, using the following standards:

- A ''page'' is 8.5″ x 11″, on one side only, with 1″ margins at the top, bottom, and both sides.
- Double space (no more than three lines per vertical inch) all text in the application narrative. You are not required to double space titles, headings, footnotes, references, and captions, or text in charts, tables, figures, and graphs.
- Use a font that is either 12 point or larger or no smaller than 10 pitch (characters per inch).
- Use one of the following fonts: Times New Roman, Courier, Courier New, or Arial.

The recommended page limit does not apply to Part I, the cover sheet; Part II, the budget section, including the narrative budget justification; Part IV, the assurances and certifications; or the one-page abstract, the resumes, the bibliography, or the letters of support. However, the recommended page limit does apply to all of the application narrative section (Part III).

Note: Please submit an appendix that lists every collaborating organization and individual named in the application, including staff, consultants, contractors, and advisory board members. We will use this information to help us screen for conflicts of interest with our reviewers.

An applicant should consult NIDRR's Long-Range Plan for Fiscal Years 2013–2017 (78 FR 20299) (Plan) when preparing its application. The Plan is organized around the following research domains: (1) Community Living and Participation; (2) Health and Function; and (3) Employment.

3. *Submission Dates and Times:*

Applications Available: April 20, 2015.

Date of Pre-Application Meeting: Interested parties are invited to participate in a pre-application meeting and to receive information and technical assistance through individual consultation with NIDILRR staff. The pre-application meeting will be held on May 11, 2015. Interested parties may participate in this meeting by conference call with NIDILRR staff from the Administration for Community Living between 1:00 p.m. and 3:00 p.m., Washington, DC time. NIDILRR staff also will be available from 3:30 p.m. to 4:30 p.m., Washington, DC time, on the same day, by telephone, to provide information and technical assistance through individual consultation. For further information or to make arrangements to participate in the meeting via conference call or to arrange for an individual consultation, contact the person listed under **FOR FURTHER INFORMATION CONTACT** in section VII of this notice.

Deadline for Notice of Intent to Apply: May 26, 2015.

Deadline for Transmittal of Applications: June 19, 2015.

Applications for grants under this competition must be submitted electronically using the Grants.gov Apply site (Grants.gov). For information (including dates and times) about how to submit your application electronically, or in paper format by mail delivery if you qualify for an exception to the electronic submission requirement, please refer to section IV. 7. *Other Submission Requirements* of this notice.

We do not consider an application that does not comply with the deadline requirements.

Individuals with disabilities who need an accommodation or auxiliary aid in connection with the application process should contact the person listed under **FOR FURTHER INFORMATION CONTACT** in section VII of this notice. If the Department provides an accommodation or auxiliary aid to an individual with a disability in connection with the application process, the individual's application remains subject to all other requirements and limitations in this notice.

4. *Intergovernmental Review:* This program is not subject to Executive Order 12372.

5. *Funding Restrictions:* We reference regulations outlining funding restrictions in the *Applicable Regulations* section of this notice.

6. *Data Universal Numbering System Number, Taxpayer Identification Number, and System for Award Management:* To do business with the Department of Health and Human Services, you must—

a. Have a Data Universal Numbering System (DUNS) number and a Taxpayer Identification Number (TIN);

b. Register both your DUNS number and TIN with the System for Award Management (SAM) (formerly the Central Contractor Registry (CCR)), the Government's primary registrant database;

c. Provide your DUNS number and TIN on your application; and

d. Maintain an active SAM registration with current information while your application is under review by the Department and, if you are awarded a grant, during the project period.

You can obtain a DUNS number from Dun and Bradstreet. A DUNS number can be created within one-to-two business days.

If you are a corporate entity, agency, institution, or organization, you can obtain a TIN from the Internal Revenue Service. If you are an individual, you can obtain a TIN from the Internal Revenue Service or the Social Security Administration. If you need a new TIN, please allow two to five weeks for your TIN to become active.

The SAM registration process can take approximately seven business days, but may take upwards of several weeks, depending on the completeness and accuracy of the data entered into the SAM database by an entity. Thus, if you think you might want to apply for Federal financial assistance under a program administered by the Department, please allow sufficient time to obtain and register your DUNS number and TIN. We strongly recommend that you register early.

Note: Once your SAM registration is active, you will need to allow 24 to 48 hours for the information to be available in Grants.gov and before you can submit an application through Grants.gov.

If you are currently registered with SAM, you may not need to make any changes. However, please make certain that the TIN associated with your DUNS number is correct. Also note that you will need to update your registration annually. This may take three or more business days.

Information about SAM is available at *www.SAM.gov.* To further assist you with obtaining and registering your DUNS number and TIN in SAM or updating your existing SAM account, we have prepared a SAM.gov Tip Sheet, which you can find at: *http://www2.ed.gov/fund/grant/apply/sam-faqs.html.*

In addition, if you are submitting your application via Grants.gov, you must: (1) Be designated by your organization as an Authorized Organization Representative (AOR); and (2) register yourself with Grants.gov as an AOR. Details on these steps are outlined at the following Grants.gov Web page: *www.grants.gov/web/grants/register.html*

7. *Other Submission Requirements:* Applications for grants under this competition must be submitted electronically unless you qualify for an exception to this requirement in accordance with the instructions in this section.

a. *Electronic Submission of Applications.*

Applications for grants under Employment Policy and Measurement, CFDA Number 84.133B–3, must be submitted electronically using the Governmentwide Grants.gov Apply site at *www.Grants.gov.* Through this site, you will be able to download a copy of the application package, complete it offline, and then upload and submit your application. You may not email an electronic copy of a grant application to us.

We will reject your application if you submit it in paper format unless, as described elsewhere in this section, you qualify for one of the exceptions to the electronic submission requirement *and* submit, no later than two weeks before the application deadline date, a written statement to the Department that you qualify for one of these exceptions. Further information regarding calculation of the date that is two weeks before the application deadline date is provided later in this section under *Exception to Electronic Submission Requirement.*

You may access the electronic grant application for the RRTC on Employment Policy and Measurement competition at*www.Grants.gov.* You must search for the downloadable application package for this competition by the CFDA number. Do not include the CFDA number's alpha suffix in your search (*e.g.,* search for 84.133, not 84.133B).

Please note the following:

- When you enter the Grants.gov site, you will find information about submitting an application electronically through the site, as well as the hours of operation.
- Applications received by Grants.gov are date and time stamped. Your application must be fully uploaded and submitted and must be date and time stamped by the Grants.gov system no later than 4:30:00 p.m., Washington, DC time, on the application deadline date. Except as otherwise noted in this section, we will not accept your application if it is received—that is, date and time stamped by the Grants.gov system—after 4:30:00 p.m., Washington, DC time, on the application deadline date. We do not consider an application that does not comply with the deadline requirements. When we retrieve your application from Grants.gov, we will notify you if we are rejecting your application because it was date and time stamped by the Grants.gov system after 4:30:00 p.m., Washington, DC time, on the application deadline date.
- The amount of time it can take to upload an application will vary depending on a variety of factors, including the size of the application and the speed of your Internet connection. Therefore, we strongly recommend that you do not wait until the application deadline date to begin the submission process through Grants.gov.
- You should review and follow the Education Submission Procedures for submitting an application through Grants.gov that are included in the application package for this competition to ensure that you submit your application in a timely manner to the Grants.gov system. You can also find the Education Submission Procedures pertaining to Grants.gov under News and Events on the Department's G5 system home page at *http://www.G5.gov.*
- You will not receive additional point value because you submit your application in electronic format, nor will we penalize you if you qualify for an exception to the electronic submission requirement, as described elsewhere in this section, and submit your application in paper format.
- You must submit all documents electronically, including all information you typically provide on the following forms: the Application for Federal Assistance (SF 424), the Department of Education Supplemental Information for SF 424, Budget Information—Non-Construction Programs (ED 524), and all necessary assurances and certifications.
- You must upload any narrative sections and all other attachments to your application as files in a PDF (Portable Document) read-only, non-modifiable format. Do not upload an interactive or fillable PDF file. If you upload a file type other than a read-only, non-modifiable PDF or submit a password-protected file, we will not review that material. Additional, detailed information on how to attach files is in the application instructions.
- Your electronic application must comply with any page-limit requirements described in this notice.
- After you electronically submit your application, you will receive from Grants.gov an automatic notification of receipt that contains a Grants.gov tracking number. (This notification indicates receipt by Grants.gov only, not receipt by the Department.) The Department then will retrieve your application from Grants.gov and send a second notification to you by email. This second notification indicates that the Department has received your application and has assigned your application a PR/Award number (an ED-specified identifying number unique to your application).
- We may request that you provide us original signatures on forms at a later date.

Application Deadline Date Extension in Case of Technical Issues with the Grants.gov System: If you are experiencing problems submitting your application through Grants.gov, please contact the Grants.gov Support Desk, toll free, at 1–800–518–4726. You must obtain a Grants.gov Support Desk Case Number and must keep a record of it.

If you are prevented from electronically submitting your application on the application deadline date because of technical problems with the Grants.gov system, we will grant you an extension until 4:30:00 p.m., Washington, DC time, the following business day to enable you to transmit your application electronically. You also may mail your application by following the mailing instructions described elsewhere in this notice.

If you submit an application after 4:30:00 p.m., Washington, DC time, on the application deadline date, please contact the person listed under **FOR FURTHER INFORMATION CONTACT** in section VII of this notice and provide an explanation of the technical problem you experienced with Grants.gov, along with the Grants.gov Support Desk Case Number. We will accept your application if we can confirm that a technical problem occurred with the Grants.gov system and that the problem affected your ability to submit your application by 4:30:00 p.m., Washington, DC time, on the application deadline date. The Department will contact you after a determination is made on whether your application will be accepted.

Note: The extensions to which we refer in this section apply only to the unavailability of, or technical problems with, the Grants.gov system. We will not grant you an extension if you failed to fully register to submit your application to Grants.gov before the application deadline date and time or if the technical problem you experienced is unrelated to the Grants.gov system.

Exception to Electronic Submission Requirement: You qualify for an exception to the electronic submission requirement, and may submit your application in paper format, if you are unable to submit an application through the Grants.gov system because—

- You do not have access to the Internet; or

• You do not have the capacity to upload large documents to the Grants.gov system;

and

• No later than two weeks before the application deadline date (14 calendar days or, if the fourteenth calendar day before the application deadline date falls on a Federal holiday, the next business day following the Federal holiday), you mail or fax a written statement to the Department, explaining which of the two grounds for an exception prevents you from using the Internet to submit your application.

If you mail your written statement to the Department, it must be postmarked no later than two weeks before the application deadline date. If you fax your written statement to the Department, we must receive the faxed statement no later than two weeks before the application deadline date.

Address and mail or fax your statement to: Patricia Barrett, U.S. Department of Health and Human Services, 400 Maryland Avenue SW., room 5142, Potomac Center Plaza (PCP), Washington, DC 20202–2700. FAX: (202) 245–7323.

Your paper application must be submitted in accordance with the mail instructions described in this notice.

b. *Submission of Paper Applications by Mail.*

If you qualify for an exception to the electronic submission requirement, you may mail (through the U.S. Postal Service or a commercial carrier) your application to the Department. You must mail the original and two copies of your application, on or before the application deadline date, to the Department at the following address: U.S. Department of Education, Application Control Center, Attention: (CFDA Number 84.133B–3) 550 12th Street SW. Room 7041, Potomac Center Plaza Washington, DC 20202–4260.

You must show proof of mailing consisting of one of the following:

(1) A legibly dated U.S. Postal Service postmark.

(2) A legible mail receipt with the date of mailing stamped by the U.S. Postal Service.

(3) A dated shipping label, invoice, or receipt from a commercial carrier.

(4) Any other proof of mailing acceptable to the Administrator of the Administration for Community Living of the U.S. Department of Health and Human Services.

If you mail your application through the U.S. Postal Service, we do not accept either of the following as proof of mailing:

(1) A private metered postmark.

(2) A mail receipt that is not dated by the U.S. Postal Service.

If your application is postmarked after the application deadline date, we will not consider your application.

Note: The U.S. Postal Service does not uniformly provide a dated postmark. Before relying on this method, you should check with your local post office.

Note for Mail of Paper Applications: If you mail your application to the Department—

(1) You must indicate on the envelope and—if not provided by the Department—in Item 11 of the SF 424 the CFDA number, including suffix letter, if any, of the program under which you are submitting your application; and

(2) The Application Control Center will mail to you a notification of receipt of your grant application. If you do not receive this notification within 15 business days from the application deadline date, you should call the U.S. Department of Education Application Control Center at (202) 245–6288.

V. Application Review Information

1. *Selection Criteria:* The selection criteria for this program are from 34 CFR 350.54 and are listed in the application package.

2. *Review and Selection Process:* Final award decisions will be made by the Administrator, ACL. In making these decisions, the Administrator will take into consideration: ranking of the review panel; reviews for programmatic and grants management compliance; the reasonableness of the estimated cost to the government considering the available funding and anticipated results; and the likelihood that the proposed project will result in the benefits expected. Under section 75.205, item (3) history of performance is an item that is reviewed.

In addition, in making a competitive grant award, the Administrator of the Administration for Community Living also requires various assurances including those applicable to Federal civil rights laws that prohibit discrimination in programs or activities receiving Federal financial assistance from the Department of Health and Human Services 45 CFR part 75.

3. *Special Conditions:* Under 45 CFR part 75 the Administrator of the Administration for Community Living may impose special conditions on a grant if the applicant or grantee is not financially stable; has a history of unsatisfactory performance; has a financial or other management system that does not meet the standards in 45 CFR part 75, as applicable; has not fulfilled the conditions of a prior grant; or is otherwise not responsible.

VI. Award Administration Information

1. *Award Notices:* If your application is successful, we send you a Notice of Award (NOA); or we may send you an email containing a link to access an electronic version of your NOA. We may notify you informally, also.

If your application is not evaluated or not selected for funding, we notify you.

2. *Administrative and National Policy Requirements:* We identify administrative and national policy requirements in the application package and reference these and other requirements in the *Applicable Regulations* section of this notice.

We reference the regulations outlining the terms and conditions of an award in the *Applicable Regulations* section of this notice and include these and other specific conditions in the NOA. The NOA also incorporates your approved application as part of your binding commitments under the grant.

3. *Reporting:* (a) If you apply for a grant under this competition, you must ensure that you have in place the necessary processes and systems to comply with the reporting requirements in 45 CFR part 75 should you receive funding under the competition. This does not apply if you have an exception under 45 CFR part 75.

(b) At the end of your project period, you must submit a final performance report, including financial information, as directed by the Administrator of the Administration for Community Living. If you receive a multi-year award, you must submit an annual performance report that provides the most current performance and financial expenditure information as directed by the Administrator of the Administration for Community Living under 45 CFR part 75. All NIDILRR grantees will submit their annual and final reports through NIDILRR's online reporting system and as designated in the terms and conditions of your NOA. The Administrator of the Administration for Community Living may also require more frequent performance reports under 45 CFR part 75. For specific requirements on reporting, please go to *www.ed.gov/fund/grant/apply/appforms/appforms.html.*

(c) FFATA and FSRS Reporting

The Federal Financial Accountability and Transparency Act (FFATA) requires data entry at the FFATA Subaward Reporting System (*http://www.FSRS.gov*) for all sub-awards and sub-contracts issued for $25,000 or more as well as addressing executive compensation for both grantee and sub-award organizations.

For further guidance please see the following link: *http://www.acl.gov/*

Funding_Opportunities/Grantee_Info/FFATA.aspx.

If you receive a multi-year award, you must submit an annual performance report that provides the most current performance and financial expenditure information. Annual and Final Performance reports will be submitted through NIDILRR's online Performance System and as designated in the terms and conditions of your NOA. At the end of your project period, you must submit a final performance report, including financial information.

Note: NIDILRR will provide information by letter to successful grantees on how and when to submit the report.

4. *Performance Measures:* To evaluate the overall success of its research program, NIDILRR assesses the quality of its funded projects through a review of grantee performance and accomplishments. Each year, NIDILRR examines a portion of its grantees to determine:

- The number of products (*e.g.,* new or improved tools, methods, discoveries, standards, interventions, programs, or devices developed or tested with NIDILRR funding) that have been judged by expert panels to be of high quality and to advance the field.
- The average number of publications per award based on NIDILRR-funded research and development activities in refereed journals.
- The percentage of new NIDILRR grants that assess the effectiveness of interventions, programs, and devices using rigorous methods.

NIDILRR uses information submitted by grantees as part of their Annual Performance Reports for these reviews.

5. *Continuation Awards:* In making a continuation award, the Administrator of the Administration for Community Living may consider, under 45 CFR part 75, the extent to which a grantee has made ''substantial progress toward meeting the objectives in its approved application.'' This consideration includes the review of a grantee's progress in meeting the targets and projected outcomes in its approved application, and whether the grantee has expended funds in a manner that is consistent with its approved application and budget. In making a continuation grant, the Administrator also considers whether the grantee is operating in compliance with the assurances in its approved application, including those applicable to Federal civil rights laws that prohibit discrimination in programs or activities receiving Federal financial assistance from the Department. Continuation funding is also subject to availability of funds.

VII. Agency Contact

FOR FURTHER INFORMATION CONTACT: Patricia Barrett, U.S. Department of Health and Human Services, 400 Maryland Avenue SW., room 5142, PCP, Washington, DC 20202–2700. Telephone: (202) 245–6211 or by email: *patricia.barrett@acl.hhs.gov.*

If you use a TDD or a TTY, call the Federal Relay Service (FRS), toll free, at 1–800–877–8339.

VIII. Other Information

Electronic Access to This Document: The official version of this document is the document published in the **Federal Register**. Free Internet access to the official edition of the **Federal Register** and the Code of Federal Regulations is available via the Federal Digital System at: *www.gpo.gov/fdsys.* At this site you can view this document, as well as all other documents of this Department published in the **Federal Register**, in text or Adobe Portable Document Format (PDF). To use PDF you must have Adobe Acrobat Reader, which is available free at the site.

You may also access documents of the Department published in the **Federal Register** by using the article search feature at: *www.federalregister.gov.* Specifically, through the advanced search feature at this site, you can limit your search to documents published by the Department.

Dated: April 14, 2015.

John Tschida,

Director, National Institute on Disability, Independent Living, and Rehabilitation Research.

[FR Doc. 2015–09024 Filed 4–17–15; 8:45 am]

BILLING CODE 4154–01–P

DEPARTMENT OF HEALTH AND HUMAN SERVICES

Administration for Community Living

Applications for New Awards; National Institute on Disability, Independent Living, and Rehabilitation Research —Rehabilitation Research and Training Centers

AGENCY: Administration for Community Living, Department of Health and Human Services.

ACTION: Notice.

Overview Information:

National Institute on Disability, Independent Living, and Rehabilitation Research (NIDILRR)—Rehabilitation Research and Training Centers (RRTC)—Employment for Individuals with Blindness or other Visual Impairments.

Notice inviting applications for new awards for fiscal year (FY) 2015.

Catalog of Federal Domestic Assistance (CFDA) Number: 84.133B–5.

DATES: *Applications Available:* April 20, 2015.

Note: On July 22, 2014, President Obama signed the Workforce Innovation Opportunity Act (WIOA). WIOA was effective immediately. One provision of WIOA transferred the National Institute on Disability and Rehabilitation Research (NIDRR) from the Department of Education to the Administration for Community Living (ACL) in the Department of Health and Human Services. In addition, NIDRR's name was changed to the Institute on Disability, Independent Living, and Rehabilitation Research (NIDILRR). For FY 2015, all NIDILRR priority notices will be published as ACL notices, and ACL will make all NIDILRR awards. During this transition period, however, NIDILRR will continue to review grant applications using Department of Education tools. NIDILRR will post previously-approved application kits to grants.gov, and NIDILRR applications submitted to grants.gov will be forwarded to the Department of Education's G–5 system for peer review. We are using Department of Education application kits and peer review systems during this transition year in order to provide for a smooth and orderly process for our applicants.

Date of Pre-Application Meeting: May 11, 2015.

Deadline for Notice of Intent to Apply: May 26, 2015.

Deadline for Transmittal of Applications: June 19, 2015.

Full Text of Announcement

I. Funding Opportunity Description

Purpose of Program: The purpose of the Disability and Rehabilitation Research Projects and Centers Program is to plan and conduct research, demonstration projects, training, and related activities, including international activities to develop methods, procedures, and rehabilitation technology. The Program's activities are designed to maximize the full inclusion and integration into society, employment, independent living, family support, and economic and social self-sufficiency of individuals with disabilities, especially individuals with the most severe disabilities, and to improve the effectiveness of services authorized under the Rehabilitation Act of 1973, as amended (Rehabilitation Act).

Rehabilitation Research and Training Centers

The purpose of the RRTCs, which are funded through the Disability and Rehabilitation Research Projects and Centers Program, is to achieve the goals

of, and improve the effectiveness of, services authorized under the Rehabilitation Act through well-designed research, training, technical assistance, and dissemination activities in important topical areas as specified by NIDILRR. These activities are designed to benefit rehabilitation service providers, individuals with disabilities, family members, policymakers and other research stakeholders. Additional information on the RRTC program can be found at: *http://www2.ed.gov/programs/rrtc/index.html#types.*

Priorities: There are two priorities for the grant competition announced in this notice. The General RRTC Requirements priority is from the notice of final priorities for the Rehabilitation Research and Training Centers, published in the **Federal Register** on February 1, 2008 (73 FR 6132). Priority two is from the notice of final priority for this program, published elsewhere in this issue of the **Federal Register**.

Absolute Priorities: For FY 2015 and any subsequent year in which we make awards from the list of unfunded applicants from this competition, these priorities are absolute priorities. Under 45 CFR part 75 we consider only applications that meet these program priorities.

These priorities are:

Priority 1—General RRTC Requirements.

Note: The full text of this priority is included in the notice of final priorities for the Rehabilitation Research and Training Centers, published in the **Federal Register** on February 1, 2008 (73 FR 6132) and in the application package for this competition.

Priority 2—RRTC on Employment for Individuals with Blindness or other Visual Impairments.

Note: The full text of this priority is included in the notice of final priority published elsewhere in this issue of the **Federal Register** and in the application package for this competition.

Program Authority: 29 U.S.C. 762(g) and 764(b)(2).

Applicable Regulations: (a) The Department of Health and Human Services General Administrative Regulations in 45 CFR part 75; (b) Audit Requirements for Federal Awards in 45 CFR part 75 Subpart F; (c) 45 CFR part 75 Non-procurement Debarment and Suspension; (d) 45 CFR part 75 Requirement for Drug-Free Workplace (Financial Assistance); (e) The regulations for this program in 34 CFR part 350; (f) The notice of final priorities for the RRTC Program published in the **Federal Register** on February 1, 2008 (73 FR 6132); and (g) The notice of final priority for this program, published elsewhere in this issue of the **Federal Register**.

II. Award Information

Type of Award: Discretionary grants.

Estimated Available Funds: $875,000.

Contingent upon the availability of funds and the quality of applications, we may make additional awards in FY 2015 and any subsequent year from the list of unfunded applicants from this competition.

Maximum Award: $875,000.

We will reject any application that proposes a budget exceeding the Maximum Amount for a single budget period of 12 months. The Administrator of the Administration for Community Living may change the maximum amount through a notice published in the **Federal Register**.

Estimated Number of Awards: 1.

The Department is not bound by any estimates in this notice.

Project Period: 60 months.

We will reject any application that proposes a project period exceeding 60 months. The Administrator of the Administration for Community Living may change the project period through a notice published in the **Federal Register**.

III. Eligibility Information

1. *Eligible Applicants:* States; public or private agencies, including for-profit agencies; public or private organizations, including for-profit organizations; IHEs; and Indian tribes and tribal organizations.

2. *Cost Sharing or Matching:* This competition does not require cost sharing or matching.

IV. Application and Submission Information

1. *Address to Request Application Package:* You can obtain an application package via grants.gov, or by contacting Patricia Barrett: U.S. Department of Health and Human Services, 400 Maryland Avenue SW., room 5142, PCP, Washington, DC 20202–2700. Telephone: (202) 245–6211 or by email: *patricia.barrett@acl.hhs.gov.*

If you request an application from Patricia Barrett, be sure to identify this competition as follows: CFDA number 84.133B–5.

2. *Content and Form of Application Submission:* Requirements concerning the content of an application, together with the forms you must submit, are in the application package for the competition announced in this notice.

Notice of Intent to Apply: Due to the open nature of the RRTC priority announced here, and to assist with the selection of reviewers for this competition, NIDILRR is requesting all potential applicants submit a letter of intent (LOI). The submission is not mandatory and the content of the LOI will not be peer reviewed or otherwise used to rate an applicant's application.

Each LOI should be limited to a maximum of four pages and include the following information: (1) The title of the proposed project, the name of the applicant, the name of the Project Director or Principal Investigator (PI), and the names of partner institutions and entities; (2) a brief statement of the vision, goals, and objectives of the proposed project and a description of its proposed activities at a sufficient level of detail to allow NIDILRR to select potential peer reviewers; (3) a list of proposed project staff including the Project Director or PI and key personnel; (4) a list of individuals whose selection as a peer reviewer might constitute a conflict of interest due to involvement in proposal development, selection as an advisory board member, co-PI relationships, etc.; and (5) contact information for the Project Director or PI. Submission of a LOI is not a prerequisite for eligibility to submit an application.

NIDILRR will accept the optional LOI via mail (through the U.S. Postal Service or commercial carrier) or email, by May 26, 2015. The LOI must be sent to: Patricia Barrett, U.S. Department of Health and Human Services, 550 12th Street, SW., room 5142, PCP, Washington, DC 20202; or by email to: *Patricia.Barrett@acl.hhs.gov.*

For further information regarding the LOI submission process, contact Patricia Barrett at (202) 245–6211.

Page Limit: The application narrative (Part III of the application) is where you, the applicant, address the selection criteria that reviewers use to evaluate your application. We recommend that you limit Part III to the equivalent of no more than 100 pages, using the following standards:

- A ''page'' is 8.5″ x 11″, on one side only, with 1″ margins at the top, bottom, and both sides.
- Double space (no more than three lines per vertical inch) all text in the application narrative. You are not required to double space titles, headings, footnotes, references, and captions, or text in charts, tables, figures, and graphs.
- Use a font that is either 12 point or larger or no smaller than 10 pitch (characters per inch).
- Use one of the following fonts: Times New Roman, Courier, Courier New, or Arial.

The recommended page limit does not apply to Part I, the cover sheet; Part II, the budget section, including the narrative budget justification; Part IV, the assurances and certifications; or the one-page abstract, the resumes, the bibliography, or the letters of support. However, the recommended page limit does apply to all of the application narrative section (Part III).

Note: Please submit an appendix that lists every collaborating organization and individual named in the application, including staff, consultants, contractors, and advisory board members. We will use this information to help us screen for conflicts of interest with our reviewers.

An applicant should consult NIDRR's Long-Range Plan for Fiscal Years 2013–2017 (78 FR 20299) (Plan) when preparing its application. The Plan is organized around the following research domains: (1) Community Living and Participation; (2) Health and Function; and (3) Employment.

3. *Submission Dates and Times:*

Applications Available: April 20, 2015.

Date of Pre-Application Meeting: Interested parties are invited to participate in a pre-application meeting and to receive information and technical assistance through individual consultation with NIDILRR staff. The pre-application meeting will be held on May 11, 2015. Interested parties may participate in this meeting by conference call with NIDILRR staff from the Administration for Community Living between 1:00 p.m. and 3:00 p.m., Washington, DC time. NIDILRR staff also will be available from 3:30 p.m. to 4:30 p.m., Washington, DC time, on the same day, by telephone, to provide information and technical assistance through individual consultation. For further information or to make arrangements to participate in the meeting via conference call or to arrange for an individual consultation, contact the person listed under **FOR FURTHER INFORMATION CONTACT** in section VII of this notice.

Deadline for Notice of Intent to Apply: May 26, 2015.

Deadline for Transmittal of Applications: June 19, 2015.

Applications for grants under this competition must be submitted electronically using the Grants.gov Apply site (Grants.gov). For information (including dates and times) about how to submit your application electronically, or in paper format by mail delivery if you qualify for an exception to the electronic submission requirement, please refer to section IV. 7. *Other Submission Requirements* of this notice.

We do not consider an application that does not comply with the deadline requirements.

Individuals with disabilities who need an accommodation or auxiliary aid in connection with the application process should contact the person listed under **FOR FURTHER INFORMATION CONTACT** in section VII of this notice. If the Department provides an accommodation or auxiliary aid to an individual with a disability in connection with the application process, the individual's application remains subject to all other requirements and limitations in this notice.

4. *Intergovernmental Review:* This program is not subject to Executive Order 12372.

5. *Funding Restrictions:* We reference regulations outlining funding restrictions in the *Applicable Regulations* section of this notice.

6. *Data Universal Numbering System Number, Taxpayer Identification Number, and System for Award Management:* To do business with the Department of Health and Human Services, you must—

a. Have a Data Universal Numbering System (DUNS) number and a Taxpayer Identification Number (TIN);

b. Register both your DUNS number and TIN with the System for Award Management (SAM) (formerly the Central Contractor Registry (CCR)), the Government's primary registrant database;

c. Provide your DUNS number and TIN on your application; and

d. Maintain an active SAM registration with current information while your application is under review by the Department and, if you are awarded a grant, during the project period.

You can obtain a DUNS number from Dun and Bradstreet. A DUNS number can be created within one-to-two business days.

If you are a corporate entity, agency, institution, or organization, you can obtain a TIN from the Internal Revenue Service. If you are an individual, you can obtain a TIN from the Internal Revenue Service or the Social Security Administration. If you need a new TIN, please allow two to five weeks for your TIN to become active.

The SAM registration process can take approximately seven business days, but may take upwards of several weeks, depending on the completeness and accuracy of the data entered into the SAM database by an entity. Thus, if you think you might want to apply for Federal financial assistance under a program administered by the Department, please allow sufficient time to obtain and register your DUNS number and TIN. We strongly recommend that you register early.

Note: Once your SAM registration is active, you will need to allow 24 to 48 hours for the information to be available in Grants.gov and before you can submit an application through Grants.gov.

If you are currently registered with SAM, you may not need to make any changes. However, please make certain that the TIN associated with your DUNS number is correct. Also note that you will need to update your registration annually. This may take three or more business days.

Information about SAM is available at *www.SAM.gov.* To further assist you with obtaining and registering your DUNS number and TIN in SAM or updating your existing SAM account, we have prepared a SAM.gov Tip Sheet, which you can find at: *http://www2.ed.gov/fund/grant/apply/sam-faqs.html.*

In addition, if you are submitting your application via Grants.gov, you must: (1) Be designated by your organization as an Authorized Organization Representative (AOR); and (2) register yourself with Grants.gov as an AOR. Details on these steps are outlined at the following Grants.gov Web page: *www.grants.gov/web/grants/register.html.*

7. *Other Submission Requirements:* Applications for grants under this competition must be submitted electronically unless you qualify for an exception to this requirement in accordance with the instructions in this section.

a. *Electronic Submission of Applications.*

Applications for grants under Employment for Individuals with Blindness or other Visual Impairments, CFDA Number 84.133B–5, must be submitted electronically using the Governmentwide Grants.gov Apply site at *www.Grants.gov.* Through this site, you will be able to download a copy of the application package, complete it offline, and then upload and submit your application. You may not email an electronic copy of a grant application to us.

We will reject your application if you submit it in paper format unless, as described elsewhere in this section, you qualify for one of the exceptions to the electronic submission requirement *and* submit, no later than two weeks before the application deadline date, a written statement to the Department that you qualify for one of these exceptions. Further information regarding calculation of the date that is two weeks

before the application deadline date is provided later in this section under *Exception to Electronic Submission Requirement.*

You may access the electronic grant application for the RRTC on Employment for Individuals with Blindness or other Visual Impairments competition at*www.Grants.gov.* You must search for the downloadable application package for this competition by the CFDA number. Do not include the CFDA number's alpha suffix in your search (*e.g.,* search for 84.133, not 84.133B).

Please note the following:

• When you enter the Grants.gov site, you will find information about submitting an application electronically through the site, as well as the hours of operation.

• Applications received by Grants.gov are date and time stamped. Your application must be fully uploaded and submitted and must be date and time stamped by the Grants.gov system no later than 4:30:00 p.m., Washington, DC time, on the application deadline date. Except as otherwise noted in this section, we will not accept your application if it is received—that is, date and time stamped by the Grants.gov system—after 4:30:00 p.m., Washington, DC time, on the application deadline date. We do not consider an application that does not comply with the deadline requirements. When we retrieve your application from Grants.gov, we will notify you if we are rejecting your application because it was date and time stamped by the Grants.gov system after 4:30:00 p.m., Washington, DC time, on the application deadline date.

• The amount of time it can take to upload an application will vary depending on a variety of factors, including the size of the application and the speed of your Internet connection. Therefore, we strongly recommend that you do not wait until the application deadline date to begin the submission process through Grants.gov.

• You should review and follow the Education Submission Procedures for submitting an application through Grants.gov that are included in the application package for this competition to ensure that you submit your application in a timely manner to the Grants.gov system. You can also find the Education Submission Procedures pertaining to Grants.gov under News and Events on the Department's G5 system home page at *http://www.G5.gov.*

• You will not receive additional point value because you submit your application in electronic format, nor will we penalize you if you qualify for an exception to the electronic submission requirement, as described elsewhere in this section, and submit your application in paper format.

• You must submit all documents electronically, including all information you typically provide on the following forms: the Application for Federal Assistance (SF 424), the Department of Education Supplemental Information for SF 424, Budget Information—Non-Construction Programs (ED 524), and all necessary assurances and certifications.

• You must upload any narrative sections and all other attachments to your application as files in a PDF (Portable Document) read-only, non-modifiable format. Do not upload an interactive or fillable PDF file. If you upload a file type other than a read-only, non-modifiable PDF or submit a password-protected file, we will not review that material. Additional, detailed information on how to attach files is in the application instructions.

• Your electronic application must comply with any page-limit requirements described in this notice.

• After you electronically submit your application, you will receive from Grants.gov an automatic notification of receipt that contains a Grants.gov tracking number. (This notification indicates receipt by Grants.gov only, not receipt by the Department.) The Department then will retrieve your application from Grants.gov and send a second notification to you by email. This second notification indicates that the Department has received your application and has assigned your application a PR/Award number (an ED-specified identifying number unique to your application).

• We may request that you provide us original signatures on forms at a later date.

Application Deadline Date Extension in Case of Technical Issues with the Grants.gov System: If you are experiencing problems submitting your application through Grants.gov, please contact the Grants.gov Support Desk, toll free, at 1–800–518–4726. You must obtain a Grants.gov Support Desk Case Number and must keep a record of it.

If you are prevented from electronically submitting your application on the application deadline date because of technical problems with the Grants.gov system, we will grant you an extension until 4:30:00 p.m., Washington, DC time, the following business day to enable you to transmit your application electronically. You also may mail your application by following the mailing instructions described elsewhere in this notice.

If you submit an application after 4:30:00 p.m., Washington, DC time, on the application deadline date, please contact the person listed under **FOR FURTHER INFORMATION CONTACT** in section VII of this notice and provide an explanation of the technical problem you experienced with Grants.gov, along with the Grants.gov Support Desk Case Number. We will accept your application if we can confirm that a technical problem occurred with the Grants.gov system and that the problem affected your ability to submit your application by 4:30:00 p.m., Washington, DC time, on the application deadline date. The Department will contact you after a determination is made on whether your application will be accepted.

Note: The extensions to which we refer in this section apply only to the unavailability of, or technical problems with, the Grants.gov system. We will not grant you an extension if you failed to fully register to submit your application to Grants.gov before the application deadline date and time or if the technical problem you experienced is unrelated to the Grants.gov system.

Exception to Electronic Submission Requirement: You qualify for an exception to the electronic submission requirement, and may submit your application in paper format, if you are unable to submit an application through the Grants.gov system because—

• You do not have access to the Internet; or

• You do not have the capacity to upload large documents to the Grants.gov system;

and

• No later than two weeks before the application deadline date (14 calendar days or, if the fourteenth calendar day before the application deadline date falls on a Federal holiday, the next business day following the Federal holiday), you mail or fax a written statement to the Department, explaining which of the two grounds for an exception prevents you from using the Internet to submit your application.

If you mail your written statement to the Department, it must be postmarked no later than two weeks before the application deadline date. If you fax your written statement to the Department, we must receive the faxed statement no later than two weeks before the application deadline date.

Address and mail or fax your statement to: Patricia Barrett, U.S. Department of Health and Human Services, 400 Maryland Avenue SW., room 5142, Potomac Center Plaza (PCP), Washington, DC 20202–2700. FAX: (202) 245–7323.

Your paper application must be submitted in accordance with the mail instructions described in this notice.

b. *Submission of Paper Applications by Mail.*

If you qualify for an exception to the electronic submission requirement, you may mail (through the U.S. Postal Service or a commercial carrier) your application to the Department. You must mail the original and two copies of your application, on or before the application deadline date, to the Department at the following address: U.S. Department of Education, Application Control Center, Attention: (CFDA Number 84.133B–5), 550 12th Street, SW., Room 7041, Potomac Center Plaza, Washington, DC 20202–4260.

You must show proof of mailing consisting of one of the following:

(1) A legibly dated U.S. Postal Service postmark.

(2) A legible mail receipt with the date of mailing stamped by the U.S. Postal Service.

(3) A dated shipping label, invoice, or receipt from a commercial carrier.

(4) Any other proof of mailing acceptable to the Administrator of the Administration for Community Living of the U.S. Department of Health and Human Services.

If you mail your application through the U.S. Postal Service, we do not accept either of the following as proof of mailing:

(1) A private metered postmark.

(2) A mail receipt that is not dated by the U.S. Postal Service.

If your application is postmarked after the application deadline date, we will not consider your application.

Note: The U.S. Postal Service does not uniformly provide a dated postmark. Before relying on this method, you should check with your local post office.

Note for Mail of Paper Applications: If you mail your application to the Department—

(1) You must indicate on the envelope and—if not provided by the Department—in Item 11 of the SF 424 the CFDA number, including suffix letter, if any, of the program under which you are submitting your application; and

(2) The Application Control Center will mail to you a notification of receipt of your grant application. If you do not receive this notification within 15 business days from the application deadline date, you should call the U.S. Department of Education Application Control Center at (202) 245–6288.

V. Application Review Information

1. *Selection Criteria:* The selection criteria for this program are from 34 CFR 350.54 and are listed in the application package.

2. *Review and Selection Process:* Final award decisions will be made by the Administrator, ACL. In making these decisions, the Administrator will take into consideration: ranking of the review panel; reviews for programmatic and grants management compliance; the reasonableness of the estimated cost to the government considering the available funding and anticipated results; and the likelihood that the proposed project will result in the benefits expected. Under section 75.205, item (3) history of performance is an item that is reviewed.

In addition, in making a competitive grant award, the Administrator of the Administration for Community Living also requires various assurances including those applicable to Federal civil rights laws that prohibit discrimination in programs or activities receiving Federal financial assistance from the Department of Health and Human Services 45 CFR part 75.

3. *Special Conditions:* Under 45 CFR part 75 the Administrator of the Administration for Community Living may impose special conditions on a grant if the applicant or grantee is not financially stable; has a history of unsatisfactory performance; has a financial or other management system that does not meet the standards in 45 CFR part 75, as applicable; has not fulfilled the conditions of a prior grant; or is otherwise not responsible.

VI. Award Administration Information

1. *Award Notices:* If your application is successful, we send you a Notice of Award (NOA); or we may send you an email containing a link to access an electronic version of your NOA. We may notify you informally, also.

If your application is not evaluated or not selected for funding, we notify you.

2. *Administrative and National Policy Requirements:* We identify administrative and national policy requirements in the application package and reference these and other requirements in the *Applicable Regulations* section of this notice.

We reference the regulations outlining the terms and conditions of an award in the *Applicable Regulations* section of this notice and include these and other specific conditions in the NOA. The NOA also incorporates your approved application as part of your binding commitments under the grant.

3. *Reporting:* (a) If you apply for a grant under this competition, you must ensure that you have in place the necessary processes and systems to comply with the reporting requirements in 45 CFR part 75 should you receive funding under the competition. This does not apply if you have an exception under 45 CFR part 75.

(b) At the end of your project period, you must submit a final performance report, including financial information, as directed by the Administrator of the Administration for Community Living. If you receive a multi-year award, you must submit an annual performance report that provides the most current performance and financial expenditure information as directed by the Administrator of the Administration for Community Living under 45 CFR part 75. All NIDILRR grantees will submit their annual and final reports through NIDILRR's online reporting system and as designated in the terms and conditions of your NOA. The Administrator of the Administration for Community Living may also require more frequent performance reports under 45 CFR part 75. For specific requirements on reporting, please go to *www.ed.gov/fund/grant/apply/appforms/appforms.html.*

(c) FFATA and FSRS Reporting

The Federal Financial Accountability and Transparency Act (FFATA) requires data entry at the FFATA Subaward Reporting System (*http://www.FSRS.gov*) for all sub-awards and sub-contracts issued for $25,000 or more as well as addressing executive compensation for both grantee and sub-award organizations.

For further guidance please see the following link: *http://www.acl.gov/Funding_Opportunities/Grantee_Info/FFATA.aspx.*

If you receive a multi-year award, you must submit an annual performance report that provides the most current performance and financial expenditure information. Annual and Final Performance reports will be submitted through NIDILRR's online Performance System and as designated in the terms and conditions of your NOA. At the end of your project period, you must submit a final performance report, including financial information.

Note: NIDILRR will provide information by letter to successful grantees on how and when to submit the report.

4. *Performance Measures:* To evaluate the overall success of its research program, NIDILRR assesses the quality of its funded projects through a review of grantee performance and accomplishments. Each year, NIDILRR examines a portion of its grantees to determine:

- The number of products (*e.g.,* new or improved tools, methods, discoveries, standards, interventions, programs, or devices developed or tested with NIDILRR funding) that have been judged

by expert panels to be of high quality and to advance the field.

• The average number of publications per award based on NIDILRR-funded research and development activities in refereed journals.

• The percentage of new NIDILRR grants that assess the effectiveness of interventions, programs, and devices using rigorous methods.

NIDILRR uses information submitted by grantees as part of their Annual Performance Reports for these reviews.

5. *Continuation Awards:* In making a continuation award, the Administrator of the Administration for Community Living may consider, under 45 CFR part 75, the extent to which a grantee has made ''substantial progress toward meeting the objectives in its approved application.'' This consideration includes the review of a grantee's progress in meeting the targets and projected outcomes in its approved application, and whether the grantee has expended funds in a manner that is consistent with its approved application and budget. In making a continuation grant, the Administrator also considers whether the grantee is operating in compliance with the assurances in its approved application, including those applicable to Federal civil rights laws that prohibit discrimination in programs or activities receiving Federal financial assistance from the Department. Continuation funding is also subject to availability of funds.

VII. Agency Contact

FOR FURTHER INFORMATION CONTACT: Patricia Barrett, U.S. Department of Health and Human Services, 400 Maryland Avenue SW., room 5142, PCP, Washington, DC 20202–2700. Telephone: (202) 245–6211 or by email: *patricia.barrett@acl.hhs.gov.*

If you use a TDD or a TTY, call the Federal Relay Service (FRS), toll free, at 1–800–877–8339.

VIII. Other Information

Electronic Access to This Document: The official version of this document is the document published in the **Federal Register**. Free Internet access to the official edition of the **Federal Register** and the Code of Federal Regulations is available via the Federal Digital System at: *www.gpo.gov/fdsys.* At this site you can view this document, as well as all other documents of this Department published in the **Federal Register**, in text or Adobe Portable Document Format (PDF). To use PDF you must have Adobe Acrobat Reader, which is available free at the site.

You may also access documents of the Department published in the **Federal Register** by using the article search feature at: *www.federalregister.gov.* Specifically, through the advanced search feature at this site, you can limit your search to documents published by the Department.

Dated: April 14, 2015.

John Tschida,

Director, National Institute on Disability, Independent Living, and Rehabilitation Research.

[FR Doc. 2015–09013 Filed 4–17–15; 8:45 am]

BILLING CODE 4154–01–P

DEPARTMENT OF HEALTH AND HUMAN SERVICES

Food and Drug Administration

[Docket No. FDA–2015–N–1037]

Pilot Program for Center for Devices and Radiological Health Electronic Submission for Home Use Device Labeling

AGENCY: Food and Drug Administration, HHS.

ACTION: Notice.

SUMMARY: The Food and Drug Administration (FDA) Center for Devices and Radiological Health (CDRH) is announcing the availability of a CDRH electronic submissions Pilot Program database to house labeling for home use devices. Participation in the pilot is open to applicants who label their device(s) for home use. Participation in the pilot project is voluntary. Participants will be asked to navigate through the electronic submissions system and practice submitting labels and package inserts. The pilot project is intended to provide industry and CDRH staff the opportunity to evaluate the submissions process and system and to receive comments from industry participants.

DATES: FDA will accept applications for participation in the voluntary electronic submissions CDRH Home Use Device Labeling Pilot Program from May 1, 2015, through May 31, 2015. See the ''Participation'' section for instructions on how to submit a request to participate. The pilot project will occur July 1, 2015, through December 31, 2015.

FOR FURTHER INFORMATION CONTACT: Mary Weick-Brady, Center for Devices and Radiological Health, Food and Drug Administration, 10903 New Hampshire Ave., Bldg. 66 Rm. 5426, Silver Spring MD 20993, 301–796–6089, *Mary.Brady@fda.hhs.gov.*

SUPPLEMENTARY INFORMATION:

I. Background

CDRH is responsible for ensuring that medical devices are safe and effective when used for their intended purpose. Risks are inherent in all CDRH-regulated medical devices, and the Center plays a critical role in preventing injuries and deaths related to product use. CDRH minimizes risk through regulation, enforcement, and education. Risk minimization is accomplished, in part, through clear communication on the benefits and risks of the medical devices regulated by the Center, including communications by CDRH, product manufacturers, and product distributors. These communications include medical device labeling produced by manufacturers and distributors.

Medical device labeling provides safety information, instructions for use, and/or other necessary information to the user. This labeling can be essential for home-use devices, which are much more likely to be used by lay users, who frequently have not been trained to use such medical devices and who are especially reliant on the instructions for use and other information provided by the device label and package insert. When used in an environment where a healthcare professional is not available to provide supervision and assistance, these devices can present unique concerns and challenges. When a home-use device is used over a period of years, it becomes increasingly more likely that it may be separated from its original labeling or that its original labeling will not include current safety information or instructions for use. In contrast with use in professional healthcare settings, a patient or caregiver using a home-use device in a setting without professional oversight may not have extensive experience in the use of a device and may not have ready access to the original packaging or to alternative sources of information about a device.

Home-use devices have significant public health importance to patients, caregivers, and healthcare professionals. Therefore, it is necessary to ensure that users are able to access necessary information for use, including safety information and instructions for use. Although many manufacturers have Internet sites that provide information concerning the devices they currently market, those sites typically focus on newer products and often do not provide any information on devices that they no longer actively market. Web sites also vary considerably in the types of information provided and may lack important details concerning their devices. Although some manufacturers'

Web sites provide some labeling, FDA believes that most do not provide the label and package insert for all of their home-use devices listed with FDA.

II. CDRH Home Use Device Labeling Pilot

CDRH is developing an electronic submissions database, accessible to the public through FDA's Web site, of labels and package inserts for listed home-use devices. This database would fill an important gap in the information available to patients, caregivers, and the healthcare community concerning home-use devices. The database would allow both broad searches to identify legally marketed home-use devices that may fill a particular need and focused searches to obtain information concerning the use of a specific home-use device.

This electronic submissions database will be evaluated for usability through the CDRH Home Use Device Labeling Pilot Project. This pilot project will proceed for 6 months. Participation in the pilot is open to applicants who label their device(s) for home use. Participants will be asked to navigate through the electronic submissions system and practice submitting labels and package inserts. The pilot project is intended to provide industry and CDRH staff the opportunity to evaluate the submissions process and system and to receive comments from industry participants. Comments received during the pilot project will be used to evaluate the usability of the database. FDA will not review the content of any labeling submitted to the pilot database for a regulatory purpose. The submitted labeling and the database will only be available to pilot participants.

A. Participation

Volunteers interested in participating in the pilot project should contact pilot staff by email at *Mary.Brady@fda.hhs.gov.* The following information should be included in the request: Contact name, contact phone number, and contact email address. FDA will contact interested applicants to discuss the pilot project. FDA is seeking a limited number of participants (no more than nine) to participate in this pilot project.

B. Procedures

By following a series of prompts and instructions, pilot participants will submit a PDF version of their device labeling to the pilot database. The content of the submissions will not be reviewed by FDA for any regulatory purpose, nor will the pilot database be available to the public during this pilot project. During the pilot, CDRH staff will be available to answer any questions or concerns that may arise. Pilot project participants will be asked to comment on and discuss their experiences with the pilot submissions process. Their comments and discussions will assist CDRH in its development of this electronic submissions database.

III. Duration of the Home Use Device Labeling Pilot

FDA intends to accept requests for participation in the Home Use Device Labeling Pilot from May 1, 2015, through May 31, 2015. The pilot will proceed for 6 months, from July 1, 2015, through December 31, 2015. This pilot program may be extended as resources and needs allow.

IV. Paperwork Reduction Act of 1995

This notice refers to previously approved collections of information found in FDA regulations. These collections of information are subject to review by the Office of Management and Budget (OMB) under the Paperwork Reduction Act of 1995 (44 U.S.C. 3501–3520). The collections of information in 21 CFR parts 801 and 809 have been approved under OMB control number 0910–0485.

V. Comments

Interested persons may submit electronic comments regarding the Home Use Device Labeling Pilot to *http://www.regulations.gov* or written comments to the Division of Dockets Management (HFA–305), Food and Drug Administration, 5630 Fishers Lane, Rm. 1061, Rockville, MD 20852. It is only necessary to send one set of comments. Identify comments with the docket number found in brackets in the heading of this document. Received comments may be seen in the Division of Dockets Management between 9 a.m. and 4 p.m., Monday through Friday and will be posted to the docket at *http://www.regulations.gov.*

Dated: April 14, 2015.

Leslie Kux,

Associate Commissioner for Policy.

[FR Doc. 2015–08957 Filed 4–17–15; 8:45 am]

BILLING CODE 4164–01–P

DEPARTMENT OF HEALTH AND HUMAN SERVICES

Office of the Secretary

[Document Identifier: HHS–OS–0990–0392–30–D]

Agency Information Collection Activities; Submission to OMB for Review and Approval; Public Comment Request

AGENCY: Office of the Secretary, HHS.

ACTION: Notice.

SUMMARY: In compliance with section 3507(a)(1)(D) of the Paperwork Reduction Act of 1995, the Office of the Secretary (OS), Department of Health and Human Services, has submitted an Information Collection Request (ICR), described below, to the Office of Management and Budget (OMB) for review and approval. The ICR is for renewal of the approved information collection assigned OMB control number 0990–0392, scheduled to expire on May 31, 2015. Comments submitted during the first public review of this ICR will be provided to OMB. OMB will accept further comments from the public on this ICR during the review and approval period.

DATES: Comments on the ICR must be received on or before May 20, 2015.

ADDRESSES: Submit your comments to *OIRA_submission@omb.eop.gov* or via facsimile to (202) 395–5806.

FOR FURTHER INFORMATION CONTACT: Information Collection Clearance staff, *Information.CollectionClearance@hhs.gov* or (202) 690–6162.

SUPPLEMENTARY INFORMATION: When submitting comments or requesting information, please include the OMB control number 0990–0392 and document identifier HHS–OS0990–0392–30D for reference.

Information Collection Request Title: Office of Adolescent Health and Administration for Children, Youth and Families Teen Pregnancy Prevention Performance Measure Collection.

Abstract: The Office of Adolescent Health (OAH), U.S. Department of Health and Human Services (HHS) is requesting an extension without change of a currently approved information collection request by OMB. The purpose of the extension is to complete the ongoing data collection for the Office of Adolescent Health and Administration for Children, Youth and Families Teen Pregnancy Prevention Performance Measures.

Need and Proposed Use of the Information: To collect performance measure data on the OAH Teen

Pregnancy Prevention (TPP) Program and the ACF/FYSB Personal Responsibility Education Program Innovative Strategies (PREIS). These data will allow OAH and FYSB to monitor the progress of program grantees, and to report to Congress on the performance of the programs.

Likely Respondents: The 106 TPP and PREIS grantees and approximately 2000 PREIS youth participants.

Burden Statement: Burden in this context means the time expended by persons to generate, maintain, retain, disclose or provide the information requested. This includes the time needed to review instructions, to develop, acquire, install and utilize technology and systems for the purpose of collecting, validating and verifying information, processing and maintaining information, and disclosing and providing information, to train personnel and to be able to respond to a collection of information, to search data sources, to complete and review the collection of information, and to transmit or otherwise disclose the information.

The total annual burden hours estimated for this ICR are summarized in the table below.

TOTAL ESTIMATED ANNUALIZED BURDEN—HOURS

Forms (if necessary)	Type of respondent	Number of respondents	Number of responses per respondent	Average burden hours per response	Total burden hours
Measures for all grantees	Grantee program staff—all	106	1	7	742
Participant-level measures	Grantee program staff—Tier 1 C/D, Tier 2, and PREIS.	45	1	1	45
Perceived impact questions	Youth participants—PREIS	2,000	1	5/60	167
Perceived impact measures	Grantee program staff—PREIS	11	1	3	33
Total					987

Terry S. Clark,

Asst Information Collection Clearance Officer.

[FR Doc. 2015–08960 Filed 4–17–15; 8:45 am]

BILLING CODE 4168–11–P

DEPARTMENT OF HEALTH AND HUMAN SERVICES

[Document Identifier: HHS–0990–0260–30D]

Agency Information Collection Activities; Proposed Collection; Public Comment Request

AGENCY: Office of the Assistant Secretary for Health, HHS.

ACTION: Notice.

SUMMARY: In compliance with section 3506(c)(2)(A) of the Paperwork Reduction Act of 1995, the Office of the Secretary, Department of Health and Human Services (HHS), announces plans to submit an Information Collection Request (ICR), described below, to the Office of Management and Budget (OMB). The ICR is for extending the use of the approved information collection assigned OMB control number 0990–0260, which expires on April 30, 2015. Prior to submitting that ICR to OMB, OS seeks comments from the public regarding the burden estimate, below, or any other aspect of the ICR.

DATES: Comments on the ICR must be received on or before May 20, 2015.

ADDRESSES: Submit your comments to *Information.CollectionClearance @hhs.gov* or by calling (202) 690–6162.

FOR FURTHER INFORMATION CONTACT: Information Collection Clearance staff, *Information.CollectionClearance @hhs.gov* or (202) 690–6162.

SUPPLEMENTARY INFORMATION: When submitting comments or requesting information, please include the document identifier 0990–0260 for reference.

Information Collection Request Title: Protection of Human Subjects: Assurance of Compliance with Federal Policy/IRB Review/IRB Recordkeeping/ Informed Consent/Consent Documentation—Extension OMB No. 0990–0260, Assistant Secretary for Health, Office for Human Research Protections.

OMB No.: 0990–0260.

Abstract: The information collected through the Protection of Human Subjects: Assurance.

Identification/IRB Certification/ Declaration of Exemption Form Protection of Human Subjects: Assurance of Compliance with Federal Policy/IRB Review/IRB Recordkeeping/ Informed Consent/Consent Documentation collection requirement is the minimum necessary to satisfy the assurance, certification, reporting, disclosure, documentation and recordkeeping requirements of Section 491(a) of the Public Health Service Act and HHS Regulations for the protection of human subjects at 45 CFR part 46.

Likely Respondents: Research institutions engaged in HHS-conducted or -supported research involving human subjects. Institutional use of the form is also relied upon by other federal departments and agencies that have codified or follow the Federal Policy for the Protection of Human Subjects (Common Rule).

TOTAL ESTIMATED ANNUALIZED BURDEN—HOURS

Title	Number of respondents	Number of responses per respondent	Average burden per response (in hours)	Total burden hours
.103(b)(4), .109(d)IRB Actions, .116 and .117 Informed Consent	6,000	39.33	1	235,980
.115(a) IRB Recordkeeping	6,000	15	10	900,000
.103(b)(5) Incident Reporting, .113 Suspension or Termination Reporting	6,000	0.5	45/60	2,250
Total				1,138,230

Terry S. Clark,

Asst. Information Collection Clearance Officer.

[FR Doc. 2015–08959 Filed 4–17–15; 8:45 am]

BILLING CODE 4150–28–P

DEPARTMENT OF HEALTH AND HUMAN SERVICES

National Institutes of Health

National Institute of Dental & Craniofacial Research; Notice of Closed Meeting

Pursuant to section 10(d) of the Federal Advisory Committee Act, as amended (5 U.S.C. App.), notice is hereby given of the following meeting.

The meeting will be closed to the public in accordance with the provisions set forth in sections 552b(c)(4) and 552b(c)(6), Title 5 U.S.C., as amended. The grant applications and the discussions could disclose confidential trade secrets or commercial property such as patentable material, and personal information concerning individuals associated with the grant applications, the disclosure of which would constitute a clearly unwarranted invasion of personal privacy.

Name of Committee: NIDCR Special Grants Review Committee.

Date: June 18–19, 2015.

Time: 8 a.m. to 12:30 p.m.

Agenda: To review and evaluate grant applications.

Place: Torrance Marriott Redondo Beach, 3635 Fashion Way, Torrance, CA 90503.

Contact Person: Marilyn Moore-Hoon, Ph.D., Scientific Review Officer Scientific Review Branch, National Institute of Dental and Craniofacial Research, 6701 Democracy Blvd., Rm. 676, Bethesda, MD 20892–4878, 301–594–4861, *mooremar@nidcr.nih.gov*.

(Catalogue of Federal Domestic Assistance Program Nos. 93.121, Oral Diseases and Disorders Research, National Institutes of Health, HHS)

Dated: April 14, 2015.

David Clary,

Program Analyst, Office of Federal Advisory Committee Policy.

[FR Doc. 2015–08901 Filed 4–17–15; 8:45 am]

BILLING CODE 4140–01–P

DEPARTMENT OF HEALTH AND HUMAN SERVICES

National Institutes of Health

National Institute of Biomedical Imaging and Bioengineering; Notice of Closed Meeting

Pursuant to section 10(d) of the Federal Advisory Committee Act, as amended (5 U.S.C. App.), notice is hereby given of the following meeting.

The meeting will be closed to the public in accordance with the provisions set forth in sections 552b(c)(4) and 552b(c)(6), Title 5 U.S.C., as amended. The grant applications and the discussions could disclose confidential trade secrets or commercial property such as patentable material, and personal information concerning individuals associated with the grant applications, the disclosure of which would constitute a clearly unwarranted invasion of personal privacy.

Name of Committee: National Institute of Biomedical Imaging and Bioengineering Special Emphasis Panel; MSM Program Review.

Date: June 24, 2015.

Time: 10 a.m. to 6 p.m.

Agenda: To review and evaluate grant applications and/or proposals.

Place: National Institutes of Health, Two Democracy Plaza, 6707 Democracy Boulevard, Bethesda, MD 20892, (Virtual Meeting).

Contact Person: Manana Sukhareva, Ph.D., Scientific Review Officer, National Institute of Biomedical Imaging and Bioengineering, 6707 Democracy Boulevard, Suite 959, Bethesda, MD 20892, 301–451–3397, *sukharem@mail.nih.gov*.

Dated: April 14, 2015.

David Clary,

Program Analyst, Office of Federal Advisory Committee Policy.

[FR Doc. 2015–08902 Filed 4–17–15; 8:45 am]

BILLING CODE 4140–01–P

DEPARTMENT OF HEALTH AND HUMAN SERVICES

National Institutes of Health

National Institute of Diabetes and Digestive and Kidney Diseases; Notice of Closed Meetings

Pursuant to section 10(d) of the Federal Advisory Committee Act, as amended (5 U.S.C. App.), notice is hereby given of the following meetings.

The meetings will be closed to the public in accordance with the provisions set forth in sections 552b(c)(4) and 552b(c)(6), Title 5 U.S.C., as amended. The grant applications and the discussions could disclose confidential trade secrets or commercial property such as patentable material, and personal information concerning individuals associated with the grant applications, the disclosure of which would constitute a clearly unwarranted invasion of personal privacy.

Name of Committee: National Institute of Diabetes and Digestive and Kidney Diseases Special Emphasis Panel; RFA–DK–14–508: SEARCH for Diabetes in Youth Cohort Study (UC4).

Date: May 20, 2015.

Time: 11 a.m. to 1 p.m.

Agenda: To review and evaluate grant applications.

Place: National Institutes of Health, Two Democracy Plaza, 6707 Democracy Boulevard, Bethesda, MD 20892 (Telephone Conference Call).

Contact Person: Dianne Camp, Ph.D., Scientific Review Officer, Review Branch, DEA, NIDDK, National Institutes of Health, Room 756, 6707 Democracy Boulevard, Bethesda, MD 20892–2542, 301–594–7682, *campd@extra.niddk.nih.gov*.

Name of Committee: National Institute of Diabetes and Digestive and Kidney Diseases Special Emphasis Panel; RFA–DK–14–021: Human Islet Research Network Consortium on Beta Cell Death and Survival (HIRN–CBDS).

Date: June 10, 2015.

Time: 12 p.m. to 5 p.m.

Agenda: To review and evaluate cooperative agreement applications.

Place: National Institutes of Health, Two Democracy Plaza, 6707 Democracy Boulevard, Bethesda, MD 20892, (Telephone Conference Call).

Contact Person: Najma Begum, Ph.D., Scientific Review Officer, Review Branch, DEA, NIDDK, National Institutes of Health, Room 749, 6707 Democracy Boulevard, Bethesda, MD 20892–5452, (301) 594–8894, *begumn@niddk.nih.gov*.

(Catalogue of Federal Domestic Assistance Program Nos. 93.847, Diabetes, Endocrinology and Metabolic Research; 93.848, Digestive Diseases and Nutrition Research; 93.849, Kidney Diseases, Urology and Hematology Research, National Institutes of Health, HHS)

Dated: April 14, 2015.

David Clary,

Program Analyst, Office of Federal Advisory Committee Policy.

[FR Doc. 2015–08900 Filed 4–17–15; 8:45 am]

BILLING CODE 4140–01–P

DEPARTMENT OF HOMELAND SECURITY

U.S. Customs and Border Protection

[CBP Dec. 15–06]

Tuna-Tariff Rate Quota; the Tariff-Rate Quota for Calendar Year 2015 Tuna Classifiable Under Subheading 1604.14.22, Harmonized Tariff Schedule of the United States (HTSUS)

AGENCY: U.S. Customs and Border Protection, Department of Homeland Security.

ACTION: Announcement of the quota quantity of tuna in airtight containers for Calendar Year 2015.

SUMMARY: Each year, the tariff-rate quota for tuna described in subheading

1604.14.22, Harmonized Tariff Schedule of the United States (HTSUS), is based on the apparent United States consumption of tuna in airtight containers during the preceding Calendar Year. This document sets forth the tariff-rate quota for Calendar Year 2015.

DATES: *Effective Dates:* The 2015 tariff-rate quota is applicable to tuna fish entered, or withdrawn from warehouse, for consumption during the period January 1, through December 31, 2015.

FOR FURTHER INFORMATION CONTACT: Headquarters Quota Branch, Interagency Collaboration Division, Trade Policy and Programs, Office of International Trade, U.S. Customs and Border Protection, Washington, DC 20229–1155, (202) 863–6560.

Background

It has been determined that 15,954,733 kilograms of tuna in airtight containers may be entered, or withdrawn from warehouse, for consumption during the Calendar Year 2015, at the rate of 6.0 percent *ad valorem* under subheading 1604.14.22, HTSUS. Any such tuna which is entered, or withdrawn from warehouse, for consumption during the current calendar year in excess of this quota will be dutiable at the rate of 12.5 percent *ad valorem* under subheading 1604.14.30 HTSUS.

Dated: April 15, 2015.

Sandra L. Bell,

Deputy Assistant Commissioner, Office of International Trade.

[FR Doc. 2015–08979 Filed 4–17–15; 8:45 am]

BILLING CODE 9111–14–P

DEPARTMENT OF HOMELAND SECURITY

Transportation Security Administration

Extension of Agency Information Collection Activity Under OMB Review: Law Enforcement Officer Flying Armed Training

AGENCY: Transportation Security Administration, DHS.

ACTION: 30-day notice.

SUMMARY: This notice announces that the Transportation Security Administration (TSA) has forwarded the Information Collection Request (ICR), Office of Management and Budget (OMB) control number 1652–0034, abstracted below to OMB for review and approval of an extension of the currently approved collection under the Paperwork Reduction Act (PRA). The ICR describes the nature of the information collection and its expected burden. TSA published a **Federal Register** notice, with a 60-day comment period soliciting comments, of the following collection of information on February 11, 2015, 80 FR 7623. The collection involves TSA gathering information from territorial, tribal, federal, municipal, county, state, and authorized railroad law enforcement agencies who have requested the Law Enforcement Officer (LEO) Flying Armed training course.

DATES: Send your comments by May 20, 2015. A comment to OMB is most effective if OMB receives it within 30 days of publication.

ADDRESSES: Interested persons are invited to submit written comments on the proposed information collection to the Office of Information and Regulatory Affairs, OMB. Comments should be addressed to Desk Officer, Department of Homeland Security/TSA, and sent via electronic mail to *oira_submission@omb.eop.gov* or faxed to (202) 395–6974.

FOR FURTHER INFORMATION CONTACT: Christina A. Walsh, TSA PRA Officer, Office of Information Technology (OIT), TSA–11, Transportation Security Administration, 601 South 12th Street, Arlington, VA 20598–6011; telephone (571) 227–2062; email *TSAPRA@tsa.dhs.gov.*

SUPPLEMENTARY INFORMATION:

Comments Invited

In accordance with the Paperwork Reduction Act of 1995 (44 U.S.C. 3501 *et seq.*), an agency may not conduct or sponsor, and a person is not required to respond to, a collection of information unless it displays a valid OMB control number. The ICR documentation is available at *http://www.reginfo.gov.* Therefore, in preparation for OMB review and approval of the following information collection, TSA is soliciting comments to—

(1) Evaluate whether the proposed information requirement is necessary for the proper performance of the functions of the agency, including whether the information will have practical utility;

(2) Evaluate the accuracy of the agency's estimate of the burden;

(3) Enhance the quality, utility, and clarity of the information to be collected; and

(4) Minimize the burden of the collection of information on those who are to respond, including using appropriate automated, electronic, mechanical, or other technological collection techniques or other forms of information technology.

Information Collection Requirement

Title: Law Enforcement Officer Flying Armed Training.

Type of Request: Extension of a currently approved collection.

OMB Control Number: 1652–0034.

Forms(s): N/A.

Affected Public: Law Enforcement Officers.

Abstract: TSA requires territorial, tribal, federal, municipal, county, state, and authorized railroad law enforcement officers (LEOs) who have a mission need to fly armed to complete the LEO Flying Armed Training under 49 CFR 1544.219. Eligibility is based on requirements stated in 49 CFR 1544.219. TSA will gather information, including agency name, address, and name of each individual who will receive the training, from law enforcement agencies that have requested the LEO Flying Armed training course. Applicant verification ensures that only LEOs with a valid need to fly armed aboard commercial aircraft receive training. Applicants come from territorial, tribal, federal, municipal, county, state, and authorized railroad law enforcement agencies throughout the country. For more information about the program, please see *http://www.tsa.gov/lawenforcement/programs/traveling_with_guns.shtm.*

Number of Respondents: 2,000.

Estimated Annual Burden Hours: An estimated 167 hours annually.

Dated: April 15, 2015.

Christina A. Walsh,

TSA Paperwork Reduction Act Officer, Office of Information Technology.

[FR Doc. 2015–09027 Filed 4–17–15; 8:45 am]

BILLING CODE 9110–05–P

DEPARTMENT OF HOUSING AND URBAN DEVELOPMENT

[Docket No. FR–5869–D–01]

Consolidated Delegations of Authority for the Office of Community Planning and Development

AGENCY: Office of the Secretary, HUD.

ACTION: Notice of delegations of authority.

SUMMARY: This notice updates, clarifies, and consolidates delegations of authority from the Secretary of Housing and Urban Development to the Assistant Secretary for Community Planning and Development, the Principal Deputy Assistant Secretary for Community Planning and Development and the General Deputy Assistant Secretary for Community Planning and Development.

DATES: Effective upon date of signature.

FOR FURTHER INFORMATION CONTACT: David H. Enzel, Director, Office of Technical Assistance and Management, Department of Housing and Urban Development, 451 7th Street SW., Room 7228, Washington, DC 20410–7000; telephone number 202–402–5557. (This is not a toll-free number.) For those needing assistance, this number may be accessed through TTY by calling the toll-free Federal Relay Service number at 1–800–877–8339.

SUPPLEMENTARY INFORMATION: This notice updates, clarifies, and consolidates into one notice the authority delegated by the Secretary of Housing and Urban Development to the Assistant Secretary for Community Planning and Development, the Principal Deputy Assistant Secretary for Community Planning and Development and the General Deputy Assistant Secretary for Community Planning and Development. This notice supersedes all previous delegations to the Assistant Secretary for Community Planning and Development, including the delegation published on May 30, 2012. The two existing redelegations of authority published on June 29, 2012 remain in effect.

Section A. Authority Delegated

Only the Assistant Secretary for Community Planning and Development is delegated the authority to issue a final regulation or a Notice of Funding Availability (NOFA). The authority delegated herein to the Assistant Secretary for Community Planning and Development, the Principal Deputy Assistant Secretary for Community Planning and Development, and the General Deputy Assistant Secretary includes the authority to waive regulations and statutes, but for the Principal Deputy Assistant Secretary and the General Deputy Assistant Secretary the authority to waive statutes is limited in Section B below.

Except as provided in Section B, the Secretary of HUD delegates to the Assistant Secretary for Community Planning and Development, the Principal Deputy Assistant Secretary for Community Planning and Development and the General Deputy Assistant Secretary for Community Planning and Development the authority of the Secretary with respect to the programs and matters listed below:

1. The AIDS Housing Opportunity Act, Title VIII, Subtitle D of the Cranston-Gonzalez National Affordable Housing Act, Pub. L. 101–625, 104 Stat. 4079 (1990) (codified as amended at 42 U.S.C. 12901–12912); 24 CFR part 574.

2. The Base Closure Community Redevelopment and Homeless Assistance Act of 1994, Pub. L. 103–421, 108 Stat. 4346 (codified as amended at 10 U.S.C. 2687 note); 24 CFR part 586.

3. Capacity Building for Community Development and Affordability Housing grants, Section 4 of the HUD Demonstration Act of 1993, Pub. L. 103–120, 107 Stat. 1148 (codified as amended at 42 U.S.C. 9816 note).

4. Comprehensive Housing Affordability Strategies (CHAS), Title I of the Cranston-Gonzalez National Affordable Housing Act, Pub. L. 101–625, 104 Stat. 4079 (1990) (codified as amended at 42 U.S.C. 12701 *et seq.*); 24 CFR part 91.

5. Economic Development Initiative grants, as provide for in annual HUD appropriations acts (*e.g.,* the Consolidated Appropriations Resolution, Fiscal Year 2003, Pub. L. 108–7, 117 Stat. (2003)).

6. Urban Empowerment Zones (EZ), as authorized under Title 26, subtitle A, chapter 1, subchapter U of the Internal Revenue Code (codified as amended at 26 U.S.C. 1391 *et seq.*); 24 CFR parts 597 and 598.

7. The HOME Investment Partnerships Act, Title II of the Cranston-Gonzalez, National Affordable Housing Act, Pub. L. 101–625, 104 Stat. 4079 (1990) (codified as amended at 42 U.S.C. 12721 *et seq.*); 24 CFR part 92.

8. The Loan Guarantee Recovery Fund under Section 4 of the Church Arson Prevention Act of 1996, Pub. L. 104–155, 110 Stat. 1392 (codified at 18 U.S.C. 241 note); 224 CFR part 573.

9. Neighborhood Initiatives grants specifically designed in annual HUD appropriations acts (*e.g.,* the Consolidated Appropriations Act 2010, Pub. L. 111–117, 123 Stat. 3034 (2009)).

10. The Homelessness Prevention and Rapid Re-Housing Program (HPRP), as authorized under the Homelessness Prevention Fund heading of Division A, Title XII of the American Recovery and Reinvestment Act of 2009, Pub. L. 111–5, 123 Stat. 115.

11. The Housing Trust Fund (HTF), Section 1338 of the Federal Housing Enterprises Financial Safety and Soundness Act of 1992, added by Section 1131 of Pub. L. 110–289, 112 Stat. 2654 (codified at 12 U.S.C. 4568); 24 CFR part 93.

12. Rural Innovation Fund grants as provided for in annual HUD appropriations acts (*e.g.,* the Consolidated Appropriations Act 2010, Pub. L. 111–117, 123 Stat. 3084 (2009)).

13. The Tax Credit Assistance Program (TCAP), as authorized under the HOME Investments Partnerships Program heading of Division A, Title XII of the American Recovery and Reinvestment Act of 2009, Pub. L. 111–5, 123 Stat. 115, 220–21.

14. The Self-Help Housing Opportunity Program (SHOP) under section 11 of the Housing Opportunity Program Extension Act of 1996, Pub. L. 104–120, 110 Stat. 834 (codified at 42 U.S.C. 12805 note).

15. Technical Assistance and Capacity Building awards authorized under any program or matter delegated under Section A (*e.g.,* Section 107 of the Housing and Community Development Act 1987, Pub. L. 100–242, 100 Stat. 1815 (1988)); and as provided for in annual and supplemental HUD appropriations acts (*e.g.,* the Consolidated Appropriations Act 2010, Pub. L. 111–117, 123 Stat. 3093 (2009)).

16. Title I of the Housing and Community Development Act of 1974, Pub. L. 93–383, 88 Stat. 633 (codified as amended at 42 U.S.C. 5301 *et seq.*); 24 CFR part 570, including the following:

a. The Community Development Block Grant (CDBG) program;

b. The Section 108 loan guarantee program;

c. Economic development grants pursuant to Section 108(q);

d. Neighborhood Stabilization programs under the Housing and Economic Recovery Act of 2008, Pub. L. 110–289, 122 Stat. 2850; Title XII of Division A of the American Recovery and Reinvestment Act of 2009, Pub. L. 111–5, 123 Stat. 115; and Section 1497 of the Wall Street Reform and Consumer Protection Act of 2010, Pub. L. 111–203, 124 Stat. 1376 (codified as amended at 42 U.S.C. 5301 note);

e. CDBG Disaster Recovery Grants as provided for in annual and supplemental HUD appropriations acts; and

f. Appalachian Regional Commission grants pursuant to Section 214 of the Appalachian Regional Development Act of 1965, Pub. L. 89–4, 79 Stat. 5 (codified as amended at 40 U.S.C. 14507) and consistent with the CDBG program authorized under Title I of the Housing and Community Development Act of 1974, Pub. L. 93–393, 88 Stat. 633 (codified as amended at 42 U.S.C. 5301 *et seq.*).

17. Title IV of the McKinney-Vento Homeless Assistance Act, Pub. L. 100–77, 101 Stat. 482 (1987) (codified as amended at 42 U.S.C. 5301 *et seq.*), renamed by an Act of October 30, 2000, Pub. L. 106–400, 114 Stat. 1675 (2000), including the following:

a. The Emergency Shelter Grants/Emergency Solutions Grants program, 24 CFR 576;

b. The Supportive Housing Program, 24 CFR part 583;

c. The Shelter Plus Care Program, 24 CFR part 582;

d. The Moderate Rehabilitation for Single Room Occupancy program 24 CFR part 882, subpart H;

e. The Continuum of Care program, 24 CFR part 578; and

f. The Rural Housing Stability Assistance program.

18. Title V of the McKinney-Vento Homeless Assistance Act, Pub. L. 100–77, 101 Stat. 482 (1987) (codified as amended at 42 U.S.C. 1411 *et seq.*), renamed by an Act of October 30, 2000, Pub. L. 106–300, 114 Stat. 1675 (2000), 24 CFR part 581.

19. The Veterans Homelessness Prevention Demonstration program as provided for in annual HUD appropriations acts (*e.g.,* Omnibus Appropriations Act, 2009, Pub. L. 111–8, 123 Stat. 524 (2009)).

20. Overall departmental responsibility for compliance with the Uniform Relocation Assistance and Real Property Acquisition Policies Act of 1970, Pub. L. 91–646, 84 Stat. 1894 (1971) (codified as amended at 42 U.S.C. 4601 *et seq.*); 49 CFR part 24. (For departmental programs, only the Assistant Secretary for Community Planning and Development is delegated the authority to exercise the federal waiver authority provided under 49 CFR 24.7).

21. Overall departmental responsibility for compliance with the National Environmental Policy Act of 1969, Pub. L. 91–190, 83 Stat. 852 (1970) (codified as amended at 42 U.S.C. 4321–4347), and the related laws and authorities cited in 24 CFR 50.4, including (with regard to the Assistant Secretary for Community Planning and Development) the authority to issue and to waive, or approve exceptions or establish criteria for exceptions from provisions of 24 CFR parts 50, 51, 55, and 58.

22. Certain Office of Community Planning and Development Programs that are no longer authorized for funding (or future funding is not anticipated), but whose administration must continue until all departmental responsibilities are discharged and finally terminated. These programs include the following:

a. The Slum Clearance and Urban Renewal program under Title I of the Housing Act of 1949, Pub. L. 81–171, 63 Stat. 413 and any program which is superseded by, or inactive by reason of Title I of the Housing and Community Development Act of 1974, Pub. L. 93–383, 88 Stat. 633 (codified as amended at 42 U.S.C. 5316);

b. Area-wide grants, inequities grants, disaster grants and the authority to concur in final approval actions regarding innovative grants under Section 107 of Title I of the Housing and Community Development Act of 1974, Pub. L. 93–383, 88 Stat. 633 (repealed 1981);

c. Urban Development Action grants under Title I of the Housing and Community Development Act of 1974, Pub. L. 93–383, 88 Stat. 633. (codified as amended at 42 U.S.C. 5318);

d. The Rental Rehabilitation Program, United States Housing Act of 1937, § 17, Pub. L. 98–181, 97 Stat. 1196;

e. The Section 312 Rehabilitation Loan Program, Housing Act of 1964, § 312 Pub. L. 88–560, 78 Stat. 769 (codified at 42 U.S.C. 1452(b)); 24 CFR part 510;

f. The Urban Homesteading Program, Housing and Community Development Act of 1974 § 810, Pub. L. 93–383, 88 Stat. 633 (repealed 1990);

g. Enterprise Zone Program under Title VII of the Housing and Community Development Act of 1987, Pub. L. 100–242, 100 Stat. 1815 (1988) (codified as amended at 42 U.S.C. 11501 *et seq.*);

h. Grant for Urban Empowerment Zones (EZ) as provided for in annual HUD appropriations acts (*e.g.,* Consolidated Appropriations resolution, Fiscal Year 2003, Pub. L. 108–7, 117 Stat. 11 (2003));

i. HUD's Homeownership Zone initiative (HOZ) grants as provided for in Section 205 of the Department of Veterans Affairs and Housing and Urban Development, and Independent Agencies Appropriations Act, 1997, Pub. L. 104–204, 110 Stat. 2874 (1996) and funded with recaptured Nehemiah grants authorized under Title VI of the Housing and Community Development Act of 1987, Pub. L. 100–242, 101 Stat. 1815 (1988) (codified at 12 U.S.C. 1715l note);

j. The Innovative Homeless Initiatives Demonstration program under the HUD Demonstration Act of 1993, Pub. L. 103–120, 107 Stat. 1144;

k. The HOPE for Homeownership of Single-family Housing (HOPE 3) program, Title IV, Subtitle C of the Cranston-Gonzalez National Affordable Housing Act, Pub. L. 101–625, 104 Stat. 4079 (1990) (codified at 42 U.S.C. 12891);

l. New Communities Program, Section 413 of the Housing and Urban Development Act of 1968, Pub. L. 90–448, 82 Stat. 476 (repealed 1983), Section 726 of the Housing and Urban –Rural Recovery Act of 1983, Pub. L. 91–609 (repealed 1983), 84 Stat. 1784, Section 474 of the Housing and Urban-Rural Act of 1983, Public Law 98–181, 97 Stat. 1237 (codified at 12 U.S.C. 1710g-5b), and any other functions, powers, and duties that may affect the liquidation of the New Communities program;

m. Rural Housing and Economic Development grants specifically designed originally in the Fiscal Year 1998 HUD Appropriations Act, Pub. L. 105–65, 111 Stat. 1344 and subsequent annual HUD appropriations acts;

n. Renewal Communities (RC), as authorized under Title 26, subtitle A, chapter 1, subchapter X of the Internal Revenue Code (codified as amended at 26 U.S.C. 1400E *et seq.*); 24 CFR part 599;

o. Youthbuild Program, Title IV, Subtitle D of the Cranston-Gonzalez National Affordable Housing Act, Pub. L. 101–625, 104 Stat. 4079 (1990) (repealed 2006); 24 CFR part 585; and Youthbuild Transfer Act (TA) as authorized under Title IV of the Cranston-Gonzalez National Affordable Housing Act, as amended by the Housing and Community Development Act of 1992, Pub. L. 102–550, 106 Stat. 3723 (1992) (repealed 2006); and

p. All programs consolidated in the Revolving Fund (Liquidating Programs) established pursuant to Title II of the Independent Offices Appropriations Act, Pub. L. 98–45, 97 Stat. 223 (1983) (codified as amended at 12 U.S.C. 1701g-5), including all authority of the Secretary with respect to functions, administration, and management of the Revolving Fund (Liquidating Programs).

23. Suspensions, and/or limited denial of participations under 2 CFR part 2424 with the concurrence of the General Counsel, or such other official as may be designed by the General Counsel.

Section B. Authority Excepted

There is excepted from the authority delegated under Section A:

1. The power to sue and be sued;

2. Under Title I of the Housing and Community Development Act of 1974, Pub. L. 93–383, 88 Stat. 633 (codified as amended at 42 U.S.C. 5301 *et seq.*):

a. The power to administer the Indian Community Development Block Grant program, for which the authority has been delegated to the Assistant Secretary for Public and Indian Housing;

b. The power to administer section 107 programs delegated to the Assistant Secretary for Policy Development and Research;

c. The power to issue obligations for purchase by the Secretary of the Treasury under section 108(g) of the Housing and Community Development Act (42 U.S.C. 5308); and

d. The power and authority of the Secretary with respect to

nondiscrimination under section 109 may be exercised only with the advice of the Assistant Secretary for Fair Housing Equal Opportunity.

3. Under the HOME Investment Partnerships Act, Title II of the Cranston-Gonzalez National Affordable Housing Act, Public Law 101–625, 104 Stat. 4079 (1990) (codified as amended at 42 U.S.C. 12721 *et seq.*), the power to administer grants to Indian tribes, for which the authority has been delegated to the Assistant Secretary for Public and Indian Housing.

4. For programs noted in Section A.22 of this delegation that are no longer authorized for funding;

a. The power to establish interest rates; and

b. The power to issue notes or obligations for purchase by the Secretary of the Treasury.

5. The authority delegated under Section A to the Principal Deputy Assistant Secretary and General Deputy Assistant Secretary does not include the authority to waive the following statutes:

a. The authority under annual and supplemental HUD appropriations acts providing Community Development Block Grant funding for disaster recovery (*e.g.,* Pub.121212 L. 113–2) to waive, or specify alternative requirements for, statutory requirements;

b. The authority under section 215(a)(6) of the Cranston-Gonzalez National Affordable Housing Act (42 U.S.C. 12745) to waive qualifying rents; and

c. The authority under section 858(b) of the Cranston-Gonzalez National Affordable Housing Act (42 U.S.C. 12906) to waive requirements for short-term supported housing and services.

Section C. Authority to Redelegate

The Assistant Secretary, the Principal Deputy Assistant Secretary and the General Deputy Assistant Secretary for Community Planning and Development are authorized to redelegate to employees of the Department any authority delegated under Section A. Redelegated authority to

CPD Director, Assistant Secretaries or other CPD program officials does not supersede the authority of the Assistant Secretary as designee of the Secretary. The two existing redelegations published on June 29, 2012 at 77 FR 38851 and 77 FR 38853 remain in effect.

Section D. Delegations Superseded

This notice supersedes all prior delegations of authority from the Secretary to the Assistant Secretary for Community Planning and Development, including the delegation published on May 30, 2012 at 77 FR 31972.

Authority: Section 7(d) of the Department of Housing and Urban Development Act, 42 U.S.C. 3535(d).

Dated: April 13, 2015.

Julián Castro,

Secretary of Housing and Urban Development.

[FR Doc. 2015–08949 Filed 4–17–15; 8:45 am]

BILLING CODE 4210–67–P

DEPARTMENT OF HOUSING AND URBAN DEVELOPMENT

[Docket No. FR–5870–D–02]

Order of Succession for the Office of Housing

AGENCY: Office of the Secretary, HUD.

ACTION: Notice of Order of Succession.

SUMMARY: In this notice, the Secretary designates the Order of Succession for the Office of Housing. This Order of Succession supersedes all prior orders of succession for the Assistant Secretary for Housing—FHA Commissioner, including the Order of Succession published on January 3, 2013.

DATES: Effective upon date of signature.

FOR FURTHER INFORMATION CONTACT: Laura M. Marin, Associate General Deputy Assistant Secretary, Office of the Assistant Secretary for Housing—Federal Housing Commissioner, Department of Housing and Urban Development, 451 7th Street SW., Room 9106, Washington, DC 20410; telephone number 202–708–2601. (This is not a toll-free number.) Persons with hearing or speech impairments may call HUD's toll-free Federal Relay Service at 800–877–8339.

SUPPLEMENTARY INFORMATION: The Secretary of Housing and Urban Development is issuing this Order of Succession of officials authorized to perform the functions and duties of the Office of the Assistant Secretary for Housing—FHA Commissioner when the Assistant Secretary—FHA Commissioner is not available to exercise the powers or perform the duties of the office. This publication supersedes all prior orders of succession for the Office of Housing, including the Order of Succession notice published on January 3, 2013.

Section A. Order of Succession

During any period, when the Assistant Secretary for Housing—FHA Commissioner is not available to exercise the powers or perform the duties of the Assistant Secretary for Housing—FHA Commissioner, the following officials within the Office of Housing are hereby designed to exercise the powers and perform the duties of the Office, including the authority to waive regulations:

(1) Principal Deputy Assistant Secretary for Housing;

(2) General Deputy Assistant Secretary for Housing;

(3) Associate General Deputy Assistant Secretary for Housing;

(4) Deputy Assistant Secretary for Single Family Housing;

(5) Deputy Assistant Secretary for Multifamily Housing;

(6) Deputy Assistant Secretary for Risk Management and Regulatory Affairs;

(7) Deputy Assistant Secretary for Housing Counseling;

(8) Deputy Assistant Secretary for Finance and Budget;

(9) Deputy Assistant Secretary for Operations;

(10) Deputy Assistant Secretary for Healthcare Programs.

These officials shall perform the functions and duties of the office in the order specified herein, and no official shall serve unless all other officials whose positions precede his/hers in this order are unable to act by reason of absence, disability, or vacancy in office.

Section B. Authority Superseded

This Order of Succession supersedes all prior orders of succession for the Assistant Secretary for Housing—FHA Commissioner, including the one published on January 3, 2013 at 78 FR 316.

Authority: Section 7(d), Department of Housing and Urban Development Act, 42 U.S.C. 3535(d).

Dated: April 13, 2015.

Julián Castro,

Secretary of Housing and Urban Development.

[FR Doc. 2015–08947 Filed 4–17–15; 8:45 am]

BILLING CODE 4210–67–P

DEPARTMENT OF HOUSING AND URBAN DEVELOPMENT

[Docket No. FR–5868–N–01]

Availability of HUD's Fiscal Year 2013 Service Contract Inventory

AGENCY: Office of the Chief Procurement Officer, HUD.

ACTION: Notice.

SUMMARY: This notice advises of the availability to the public of service contracts awarded by HUD in Fiscal Year (FY) 2013.

FOR FURTHER INFORMATION CONTACT: Lisa D. Maguire, Assistant Chief

Procurement Officer, Office of Policy, Systems and Risk Management, Office of the Chief Procurement Officer, Department of Housing and Urban Development, 451 7th Street SW., Washington, DC 20410; telephone number 202–708–0294 or Lawrence E. Chambers, Director, Risk Management and Compliance Unit, Policy, Systems and Risk Management, Department of Housing and Urban Development, 451 7th St. SW., Washington, DC 20410, telephone number: 202–402–6716 (these are not toll-free numbers) and fax number 202–708–8912. Persons with hearing or speech impairments may access Mr. Chambers' telephone number by calling the toll-free Federal Relay Service at 800–877–8339.

SUPPLEMENTARY INFORMATION: In accordance with section 743 of Division C of the Consolidated Appropriations Act of 2010 (Pub. L. 111–117, approved December 16, 2009, 123 Stat. 3034, at 123 Stat. 3216), HUD is publishing this notice to advise the public of service contract inventories that were awarded in FY 2013. The inventories are organized by function and are reviewed by HUD to better understand how contracted services are used to support HUD's primary mission, to insure HUD maintains an adequate workforce for operations and to research whether contractors were performing inherently governmental functions.

The inventory was developed in accordance with guidance issued on November 5, 2010, by the Office of Management and Budget's Office Federal Procurement Policy (OFPP). OFPP's guidance is available at *https://www.whitehouse.gov/sites/default/files/omb/procurement/memo/service-contract-inventories-guidance-11052010.pdf.*

HUD has posted its inventory and a summary of the inventory on the Department of Housing and Urban Development's homepage at the following link: *http://portal.hud.gov/hudportal/HUD?src=/program_offices/cpo/sci.*

Dated: April 14, 2015.

Lisa D. Maguire,

Assistant Chief Procurement Officer.

[FR Doc. 2015–08945 Filed 4–17–15; 8:45 am]

BILLING CODE 4210–67–P

DEPARTMENT OF HOUSING AND URBAN DEVELOPMENT

[Docket No. FR–5866–N–01]

Notice of Intent To Prepare an Environmental Impact Statement (EIS) for Coastal and Social Resiliency Initiatives for Tottenville Shoreline, Staten Island, NY

AGENCY: Office of the Assistant Secretary for Community Planning and Development, HUD.

ACTION: Notice of Intent to Prepare an EIS.

SUMMARY: This provides notice that the State of New York, as the ''Responsible Entity,'' as that term is defined by 24 CFR 58.2(a)(7)(i), intends to prepare an Environmental Impact Statement (EIS) that will evaluate alternatives for increasing coastal and social resiliency along the Tottenville shoreline on the South Shore of Staten Island and help to avoid or minimize adverse impacts to the quality of the human environment (''Proposed Actions''). The State of New York is the Grantee of Community Development Block Grant Disaster Recovery (CDBG–DR) funds appropriated by the Disaster Relief Appropriations Act, 2013 (Pub. L. 113–2, approved January 29, 2013) related to disaster relief, long-term recovery, restoration of infrastructure and housing, and economic revitalization in the most impacted and distressed areas resulting from a major disaster declared pursuant to the Robert T. Stafford Disaster Relief and Emergency Assistance Act of 1974 (Stafford Act) in calendar years 2011, 2012, and 2013. The Governor's Office of Storm Recovery (GOSR) implements the State's obligations under the National Environmental Policy Act (NEPA) through duly authorized Certifying Officers. GOSR was formed under the auspices of the New York State Homes and Community Renewal's Housing Trust Fund Corporation (HTFC), a public benefit corporation and subsidiary of the New York State Housing Finance Agency.

The EIS will satisfy the requirements of NEPA and the State Environmental Quality Review Act (SEQRA). This notice is in accordance with the Council on Environmental Quality (CEQ) regulations at 40 CFR parts 1500–1508 and HUD regulations at 24 CFR part 58. Following a public scoping process, a Draft EIS will be prepared for the proposed actions described herein. Comments relating to the Draft Scope of Work for the EIS are requested and will be accepted by the contact person listed below. When the Draft EIS is completed, a notice will be sent to appropriate government agencies, individuals and groups known to have an interest in the Draft EIS and particularly in the environmental impact issues identified therein. Any person or agency interested in receiving notice and commenting on the Draft Scope of Work or Draft EIS should contact the person listed below no later than May 15, 2015. HUD has provided for assumption of its NEPA authority and responsibilities to New York State, as Responsible Entity, for the purposes of administering the Community Development Block Grant Disaster Recovery Program in New York State.

Comments: Comments relating to the Draft Scope of Work for the EIS are requested and will be accepted by the contact person listed below until May 15, 2015. Comments will also be accepted at the scoping meeting described below on April 30, 2015. All interested agencies, tribes, groups, and persons are invited to submit written comments on the projects named in this notice and on the Draft Scope of Work for the EIS to the contact person listed below. All comments received before May 15, 2015 will be considered prior to the preparation and distribution of the Draft EIS. Commenters are asked to submit any information-related reports or other environmental studies planned or completed in the project area, major issues that the EIS should consider, recommended mitigation measures, and alternatives associated with the Proposed Actions. Federal, State and City agencies having jurisdiction by law, special expertise, or other special interest should report their interest and indicate their readiness to aid in the EIS effort as a ''Cooperating Agency.'' The following federal agencies have thus far expressed roles as cooperating agencies under NEPA: The United States Army Corps of Engineers (USACE), the National Oceanic and Atmospheric Administration's National Marine Fisheries Service (NOAA–NMFS), and the United States Environmental Protection Agency (USEPA).

FOR FURTHER INFORMATION CONTACT: Daniel Greene, Deputy General Counsel and Certifying Officer, Governor's Office of Storm Recovery, 25 Beaver Street, 5th Floor, New York, NY 10004; email: *nyscdbg_dr_er@nyshcr.org.* Individuals may request a copy of the Draft Scope of Work by contacting Mr. Greene at this address or by visiting GOSR's Web site at *www.StormRecovery.ny.gov/Environment.*

SUPPLEMENTARY INFORMATION:

A. Background

The State of New York, acting through GOSR, and acting under authority of HUD's regulations at 24 CFR part 58, and in cooperation with other cooperating, involved, and interested agencies, will prepare an EIS to analyze potential impacts of certain alternatives to enhance coastal and social resiliency on the South Shore of Staten Island. The EIS will seek to avoid or minimize adverse impacts to the quality of the human environment.

Staten Island is exposed to extreme wave action and coastal flooding during hurricane and nor'easter events due to its location at the mouth of the New York Bight, which funnels and increases the intensity of storm surge into New York Harbor, Raritan Bay, and the shoreline of Staten Island. The South Shore of Staten Island is particularly vulnerable to more continual and gradual coastal erosion and land loss. The overarching goal of the initiative is to reduce risk and coastal erosion along the shoreline in Tottenville by implementing strategies that would primarily address wave action, impacts of coastal flooding, and event-based (*i.e.,* short-term/storm-related) and long-term shoreline erosion, while restoring and enhancing ecosystems and engaging with the community through educational programs and enhanced waterfront access. The EIS will look at several alternatives to achieve these objectives.

B. Purpose and Need of the Proposed Action

As described above, the South Shore of Staten Island is vulnerable to coastal erosion and land loss. Consistent with the New York City's Coastal Protection Initiatives and planning studies for the Tottenville area, the goal of the Proposed Actions is to reduce risk and coastal erosion along the shoreline in Tottenville, while enhancing ecosystems and shoreline accessibility and use.

Specifically, the goals and objectives related to the Proposed Actions' purpose and need are listed below:

Risk Reduction

- Attenuate wave energy.
- Address both event-based and long-term shoreline erosion/preserve beach width.
- Address the impacts of coastal flooding.

Ecological Enhancement

- Increasing diversity of aquatic habitats consistent with the Hudson-Raritan Estuary plan priorities (*e.g.,* oyster reefs and fish and shellfish habitat).

Social Resiliency

- Foster community education on coastal resiliency directly tied to and building off the structural components of this resiliency initiative.
- Increase physical and visual access to the water's edge.
- Enhance community stewardship of on-shore and in-water ecosystems.
- Increase access to recreational opportunities.

C. Project Alternatives

The EIS will discuss all of the alternatives that have been considered for analysis, identify those that have been eliminated from further consideration because they do not meet the stated purpose and need, and identify those that will be analyzed further. At this time, it is anticipated that the following alternatives will be analyzed:

Alternative 1—No Action Alternative

The No Action alternative assumes that no new structural risk reduction projects will be implemented in the project area and existing trends of dune replenishment would continue. This alternative also assumes that current trends with respect to coastal conditions at Tottenville—*i.e.,* relating to erosion, wave action, ecosystems, and water quality—will continue. The No Action alternative also presumes that existing strategies to educate New Yorkers and the general public on the risks posed by climate change will remain the same in the study area.

Alternative 2—The Layered Tottenville Shoreline Resiliency Strategy: Living Breakwaters and Tottenville Dune Projects (''Layered Strategy'') (Preferred Alternative)

The Layered Strategy is the State's preferred alternative and it consists of the implementation of two individual projects that, if integrated as one initiative, may provide a better overall coastal projection and promote social resilience. These projects were developed through separate, but related, planning initiatives arising out of the Hurricane Sandy recovery efforts. If implemented together, the projects would be planned and designed as a single, integrated coastal resiliency strategy for this area. By providing two layers of coastal protection, these components, as further described below, will improve current shoreline erosion conditions, serve to further reduce wave action, provide for ecological enhancement and promote social resiliency. The individual components of the Layered Strategy are discussed below.

Living Breakwaters Project (Rebuild-by-Design)

New York State has been allocated $60 million of CDGB–DR program funds toward a total estimated project cost of $74 million to implement the below described project along the Tottenville shoreline of the South Shore of Staten Island.

In-Water Components

One of the key components of the Layered Strategy is the Breakwaters Project, an ecologically enhanced breakwater system that would reduce wave energy at the shoreline and prevent shoreline erosion. The proposed location of the breakwaters is expected to curtail shoreline erosion, which would support on-going efforts to replenish the protective beaches along the shore. The proposed breakwaters would span an approximately 13,000 linear foot stretch off the Tottenville shoreline of Staten Island and would be located and designed to optimize wave height reduction and reduce coastal erosion. Final siting considerations would include maximizing reductions in wave heights and shoreline erosion, avoiding or minimizing habitat displacement and navigational impacts, and identifying favorable geotechnical conditions.

The proposed breakwater system would increase habitat diversity through the establishment of structural habitat, which is currently limited within Raritan Bay. The breakwaters would likely provide a combination of exposed, intertidal and subtidal reef habitat, and through the incorporation of ''reef streets'' (pockets of complexity within the structure) would further increase habitat diversity within Raritan Bay by providing shelter for juvenile fish, and increasing biological recruitment of filter-feeding organisms such as mussels and oysters, furthering opportunities for shellfish restoration within Raritan Bay. The breakwaters would also protect the proposed on-shore dune system described below. The draft operation and maintenance plan for the proposed breakwater system will be described in the EIS.

On-Shore Community Water Hub/ Landscape Elements

With the goal of promoting social resiliency, a proposed community Water Hub would provide a place for access to the waterfront, orientation, education, information, restoration, gathering and equipment storage. In particular, the

Water Hub programming would include classrooms and labs, engaging schools in waterfront education, oyster restoration and reef building, and cultivating long-term estuary stewardship. The educational programming for the Water Hub will directly tie in to the in-water components, as well as to any shoreline resiliency component. In addition to ecological engagement, the Water Hub facilities and programs are intended to educate residents on the risks and benefits of living in the coastal environment and build awareness and preparedness within the community. The Tottenville Water Hub may also include other elements, such as recreation lounges, exhibition space, a local restaurant, maintenance-related storage space and offices, bird watching stations and nature observation decks.

The Water Hub would potentially be located on the waterfront within or near Conference House Park, although alternate locations will be considered during the EIS process. Siting considerations would include access to existing infrastructure, Coastal Erosion Hazard Area (CEHA) sensitivity, coastal construction permitting, archaeological sensitivity, proximity to the breakwater system, proximity to local schools and public transportation, and neighborhood traffic patterns and parking. The draft operation and maintenance plan for the proposed Water Hub will be described in the EIS.

The Breakwaters Project would also include several on-shore and near-shore landscape elements in the area of the Water Hub, including living shorelines (high and low marsh), oyster revetments, maritime forest and dune plantings.

Tottenville Dune Project (NY Rising Community Reconstruction Program)

New York State proposes to use approximately $6,350,000 of HUD CDBG-DR program funds to implement the below-described dune system with plantings along the Tottenville shoreline from approximately Brighton Street to Joline Avenue. The Dune Project is intended to protect against coastal flooding and wave action, complementing the Breakwaters Project and furthering the goal of risk reduction in Tottenville.

The Tottenville Dune Project is proposed as a hardened dune system that would consist of constructed dunes having a stone core with a sand cap, and is the primary shoreline component of the layered approach to risk reduction in Tottenville. Once constructed, the dunes would be planted with appropriate vegetation, which through root growth, will serve to stabilize the dunes to withstand wind and water erosion while promoting enlargement of the dunes by accretion.

The proposed dune system would be located along the Tottenville shoreline from approximately Brighton Street to Joline Avenue. Temporary dunes, constructed by the New York City Department of Parks and Recreation (NYCDPR) as interim protective measures post-Sandy, are currently in place from approximately Brighton Street to Sprague Avenue. These temporary dunes would be replaced with the larger, hardened dune system. New dunes would also be constructed from Sprague Avenue to Joline Avenue. Americans with Disabilities Act (ADA) accessible access points to the beach would also be constructed along the new dune system and would be considered and designed in tandem with the Water Hub and living shoreline project components. Designing the dunes in conjunction with the breakwaters may enable design modifications of the dunes (such as, reduced height) that would enhance the need for shoreline accessibility. The draft operation and maintenance plan for the proposed dune system will be described in the EIS.

Alternative 3—Breakwaters Without a Dune System

This alternative will evaluate conditions with the proposed breakwaters in place (including the on-shore community Water Hub and landscape elements), but without a proposed long-term dune system between Brighton Avenue and Joline Avenue.

Alternative 4—Dune System Without Breakwaters

This alternative will evaluate conditions with the proposed long-term dune system in place, but without the proposed breakwaters, Water Hub, or on-shore landscape elements.

Other Alternatives

Other alternatives may be developed in consultation with the United States Army Corp of Engineers, the National Oceanic and Atmospheric Administration—National Marine Fisheries Service, the United States Environmental Protection Agency, the New York State Department of State, New York State Department of Environmental Conservation, New York City Department of Parks and Recreation and other involved agencies during the EIS preparation process, as well as in response to suggestions made by project stakeholders and the general public during the EIS scoping process. Notably, GOSR intends for the alternatives analysis to fulfill the requirements for a permit under Section 404 of the Clean Water Act. These may include non-structural coastal resilience strategies, but only to the extent that they meet the purposes and need for both enhanced shoreline protection and increased social resiliency. The alternatives may also include coastal resiliency strategies proposed by other governmental stakeholders, to the extent that these strategies are made available to GOSR during development of the Draft EIS. Additionally, alternatives may also include alternate designs or sizes of both the dune and breakwaters.

D. Need for the EIS

The actions proposed herein may constitute an action significantly affecting the quality of the environment and an EIS will be prepared on this project in accordance with NEPA. Responses to this notice will be used to: (1) Determine significant environmental issues, (2) assist in developing a range of alternatives to be considered, (3) identify issues that the EIS should address, and (4) identify agencies and other parties that will participate in the EIS process and the basis for their involvement.

E. Scoping

A public EIS scoping meeting will be held on April 30, 2015 from 7:00 to 9:00 p.m. at CYO–MIV Community Center, 6541 Hylan Blvd., Staten Island, NY 10309. The public meeting site will be accessible to the mobility-impaired. Interpreter services will be available for the hearing or visually impaired upon advance request. The EIS scoping meetings will provide an opportunity for the public to learn more about the Proposed Actions and provide input to the environmental process. At the meetings, an overview of the Proposed Actions, including the preferred Layered Strategy alternative, will be presented and members of the public will be invited to comment on the scope of work for the environmental analyses in the EIS. Written comments and testimony concerning the scope of the EIS will be accepted at these meetings. In accordance with 40 CFR 1501.7; affected Federal, State, and local agencies, any affected Indian tribes, and other interested parties will be sent a scoping notice. In accordance with 24 CFR 58.59, the scoping meetings will be preceded by a notice of public meeting published in the local news media at least 15 days before the hearing date.

F. Probable Environmental Effects

The following subject areas will be analyzed in the combined EIS for probable environmental effects: Land Use, Zoning, and Public Policy; Socioeconomic Conditions; Environmental Justice; Cultural Resources; Visual Character; Shadows; Natural Resources; Water and Sewer Infrastructure; Transportation; Air Quality; Greenhouse Gases and Climate Change; Noise; Construction; Public Health; Neighborhood Character; and Cumulative Effects.

Questions may be directed to the individual named in this notice under the heading **FOR FURTHER INFORMATION CONTACT**.

Date: April 15, 2015.

Clifford Taffet,

General Deputy Assistant Secretary for Community Planning and Development.

[FR Doc. 2015–09007 Filed 4–17–15; 8:45 am]

BILLING CODE 4210–67–P

DEPARTMENT OF HOUSING AND URBAN DEVELOPMENT

[Docket No. FR–5857–N–01]

Section 8 Housing Assistance Payments Program—Fiscal Year (FY) 2015 Inflation Factors for Public Housing Agency (PHA) Renewal Funding

AGENCY: Office of the Assistant Secretary for Policy Development and Research, HUD.

ACTION: Notice.

SUMMARY: The Consolidated Appropriations Act, 2015 requires that HUD apply ''an inflation factor as established by the Secretary, by notice published in the **Federal Register**'' to adjust FY 2015 renewal funding for the Tenant-based Rental Assistance Program or Housing Choice Voucher (HCV) Program of each PHA. HUD began using Renewal Funding Inflation Factors in FY 2012. These Renewal Funding Inflation Factors incorporate economic indices to measure the expected change in per unit costs (PUC) for the HCV program. The methodology for FY 2015 is similar to that used in FY 2014.

DATES: Effective Date: April 20, 2015. *Comments Due Date:* June 19, 2015.

ADDRESSES: Interested persons are invited to submit comments on potential improvements to HUD's per unit cost (PUC) forecasting model to the Office of the General Counsel, Rules Docket Clerk, Department of Housing and Urban Development, 451 Seventh Street SW., Room 10276, Washington, DC 20410–0001. Communications should refer to the above docket number and title and should contain the information specified in the ''Request for Comments'' section. There are two methods for submitting public comments.

1. Submission of Comments by Mail. Comments may be submitted by mail to the Regulations Division, Office of General Counsel, Department of Housing and Urban Development, 451 7th Street SW., Room 10276, Washington, DC 20410–0500. Due to security measures at all federal agencies, however, submission of comments by mail often results in delayed delivery. To ensure timely receipt of comments, HUD recommends that comments submitted by mail be submitted at least two weeks in advance of the public comment deadline.

2. Electronic Submission of Comments. Interested persons may submit comments electronically through the Federal eRulemaking Portal at *http://www.regulations.gov*. HUD strongly encourages commenters to submit comments electronically. Electronic submission of comments allows the commenter maximum time to prepare and submit a comment, ensures timely receipt by HUD, and enables HUD to make them immediately available to the public. Comments submitted electronically through the *http://www.regulations.gov* Web site can be viewed by other commenters and interested members of the public. Commenters should follow instructions provided on that site to submit comments electronically.

Note: To receive consideration as public comments, comments must be submitted through one of the two methods specified above. Again, all submissions must refer to the docket number and title of the notice.

No Facsimile Comments. Facsimile (FAX) comments are not acceptable.

Public Inspection of Comments. All comments and communications submitted to HUD will be available, without change, for public inspection and copying between 8 a.m. and 5 p.m. weekdays at the above address. Due to security measures at the HUD Headquarters building, an advance appointment to review the public comments must be scheduled by calling the Regulations Division at (202) 708–3055 (this is not a toll-free number). Copies of all comments submitted are available for inspection and downloading at *http://www.regulations.gov*.

FOR FURTHER INFORMATION CONTACT: Miguel A. Fontanez, Director, Housing Voucher Financial Division, Office of Public Housing and Voucher Programs, Office of Public and Indian Housing, telephone number 202–402–4212; or Peter B. Kahn, Director, Economic and Market Analysis Division, Office of Policy Development and Research, telephone number 202–402–2409, for technical information regarding the development of the schedules for specific areas or the methods used for calculating the inflation factors, Department of Housing and Urban Development, 451 7th Street SW., Washington, DC 20410. Hearing- or speech-impaired persons may contact the Federal Relay Service at 800–877–8339 (TTY). (Other than the ''800'' TTY number, the above-listed telephone numbers are not toll free.)

SUPPLEMENTARY INFORMATION:

I. Background

Tables showing Renewal Funding Inflation Factors will be available electronically from the HUD data information page at: *http://www.huduser.org/portal/datasets/rfif/FY2015/FY2015_RFIF_FMR_AREA_REPORT.pdf*.

Division K, Title II, Consolidated and Further Continuing Appropriations Act, 2015 requires that the HUD Secretary, for the calendar year 2015 funding cycle, provide renewal funding for each public housing agency (PHA) based on validated voucher management system (VMS) leasing and cost data for the prior calendar year and by applying an inflation factor as established by the Secretary, by notice published in the **Federal Register**. This notice provides the FY 2015 inflation factors and describes the methodology for calculating them.

II. Methodology

The Department has focused on measuring the change in average PUC as captured in HUD's administrative data in VMS. In order to predict the likely path of PUC over time, HUD has implemented a model that uses three economic indices that capture key components of the economic climate and assist in explaining the changes in PUC. These economic components are the seasonally-adjusted unemployment rate (lagged twelve months), the Consumer Price Index from the Bureau of Labor Statistics, and the ''wages and salaries'' component of personal income from the National Income and Product Accounts from the Bureau of Economic Analysis. This model subsequently forecasts the expected annual change in average PUC from Calendar Year (CY) 2014 to CY 2015 for the voucher program on a national basis by incorporating comparable economic variables from the Administration's

economic assumptions. For reference, these economic assumptions are described in Chapter 2 of the Analytical Perspectives in the President's FY 2016 Budget Proposal.

Using the Per Unit Cost forecasting model, HUD forecasts average PUC to decrease slightly in 2015. The PUC forecast for 2015 uses VMS data and actual performance of economic indices through December of 2014. With no increases in PUCs predicted for 2015, the Renewal Funding Inflation Factor for each area will be 1.0.

III. The Use of Inflation Factors

Typically, the inflation factors have been developed to account for relative differences in the PUC of vouchers so that HCV funds can be allocated among PHAs. However, since the current forecast is for the PUC to decline in 2015, HUD has set all areas to have an inflation factor of 1.0, which is consistent with the statutory requirements governing the Annual Adjustment Factor.

IV. Geographic Areas and Area Definitions

Inflation factors based on PUC forecasts are produced for all FMR areas. The tables showing the Renewal Funding Inflation Factors available electronically from the HUD data information page list the inflation factors for each FMR area and are created on a state by state basis. The inflation factors use the same OMB metropolitan area definitions, as revised by HUD, that are used in the FY 2015 FMRs. To make certain that they are referencing the correct inflation factors, PHAs should refer to the Area Definitions Table on the following Web page: *http://www.huduser.org/portal/datasets/rfif/FY2015/FY2015_RFIF_FMR_AREA_REPORT.pdf*. The Area Definitions Table lists areas in alphabetical order by state, and the counties associated with each area. In the six New England states, the listings are for counties or parts of counties as defined by towns or cities.

V. Request for Comments

HUD has forecasted the decline in national PUC for 2015 to be −0.79 percent. While more analysis is necessary, HUD is concerned that the current model used to predict the amount of per unit cost, when interacted with voucher program appropriations decisions, may have inadvertently locked in PHA cost reduction behaviors used to cope with funding reductions under sequestration in 2013.

Rather than terminate assistance from families participating in the program, PHAs often respond to reduced funding by not reissuing vouchers when families leave the program. However there is a strong incentive for PHAs to reduce spending in the voucher program by means other than reducing the number of families served because PHA administrative fees are based on the number of vouchers under lease. These policies have the effect of reducing the (average) subsidy cost of vouchers, and as a result, reduce a family's ability to rent in higher rent markets and higher opportunity areas. These policies, while necessary to handle the budget constraints, may also be viewed as reducing the effectiveness of vouchers in meeting the goals of the program.

One of the primary tools PHAs use in administering the voucher program is through setting payment standards. Payment standards, rather than Fair Market Rents (FMR), form the basis of the subsidy (the lower of the payment standard or gross rent less the total tenant payment—typically 30 percent of adjusted household income) since a tenant selecting a unit with a gross rent higher than the payment standard must make up the additional rent to the owner. When payment standards decrease relative to FMR, the selection of units available to tenants decreases and higher opportunity neighborhoods with generally higher rents may no longer be available for tenants. A reduction of payment standards relative to FMRs is likely to cause gross rents to grow more slowly than FMRs as tenants choose units available within the payment standard.

Other tools PHAs may use to reduce subsidy cost include policies that encourage more earnings among tenants or by approving more cases of tenants paying more than 30 percent of adjusted income toward rent.

Thus, the model's projections for PUC may not accurately forecast the true cost of maintaining a voucher program when there is a significant external event. As stated in prior notices, HUD may update the methodology for future funding estimates to improve the forecasting model, if necessary. HUD is also continuing to review and refine the methodology, especially for area differences in the factors, which will be described in future inflation factor notices. One option the Department is considering is to create a ''constant quality'' PUC forecast that addresses reduced payment standards and increases in tenant contributions as a way to account for outside disruptions such as sequestration. The Department welcomes comments on other ways to calculate the Renewal Funding Inflation Factor for the Housing Choice Voucher program for 2016 and beyond.

VI. Environmental Impact

This notice involves a statutorily required establishment of a rate or cost determination which does not constitute a development decision affecting the physical condition of specific project areas or building sites. Accordingly, under 24 CFR 50.19(c)(6), this notice is categorically excluded from environmental review under the National Environmental Policy Act of 1969 (42 U.S.C. 4321).

Dated: April 10, 2015.

Katherine M. O'Regan,

Assistant Secretary for Policy Development and Research.

[FR Doc. 2015–09011 Filed 4–17–15; 8:45 am]

BILLING CODE 4210–67–P

DEPARTMENT OF HOUSING AND URBAN DEVELOPMENT

[Docket No. FR–5869–D–02]

Order of Succession for the Office of Community Planning and Development

AGENCY: Office of the Secretary, HUD.

ACTION: Notice of Order of Succession for the Office of Community Planning and Development.

SUMMARY: In this notice, the Secretary of HUD designates the Order of Succession for the Office of Community Planning and Development. This Order of Succession supersedes all prior Orders of Succession for the Assistant Secretary for Community Planning and Development, including the Order of Succession published on May 30, 2012.

DATES: Effective upon date of signature.

FOR FURTHER INFORMATION CONTACT: David H. Enzel, Director, Office of Technical Assistance and Management, Department of Housing and Urban Development, 451 7th Street SW., Room 7228, Washington, DC 20410–7000; telephone number 202–402–5557. (This is not a toll-free number.) This number may be accessed via TTY by call the Federal Relay Service at 1–800–877–8339 (this is a toll-free number).

SUPPLEMENTAL INFORMATION: The Secretary of HUD is issuing this Order of Succession of officials authorized to perform the functions and duties of the Office of the Assistant Secretary for Community Planning and Development when the Assistant Secretary is not available to exercise the powers or perform the duties of the office. This publication supersedes all prior orders of succession for the Office of

Community Planning and Development, including the Order of Succession published in the **Federal Register** on May 30, 2012.

Section A. Order of Succession

During any period when the Assistant Secretary is not available to exercise the powers or perform the duties of the Assistant Secretary for Community Planning and Development the following officials within the Office of Community Planning and Development are hereby designated to exercise the powers and perform the duties of the Office, including the authority to waive regulations:

(1) Principal Deputy Assistant Secretary for Community Planning and Development;

(2) General Deputy Assistant Secretary for Community Planning and Development;

(3) Deputy Assistant Secretary for Grant Programs;

(4) Deputy Assistant Secretary for Special Needs Programs;

(5) Deputy Assistant Secretary for Operations;

(6) Deputy Assistant Secretary for Economic Development.

These officials shall perform the functions and duties of the office in the order specified herein, and no official shall serve unless all the other officials, whose positions precede his/hers in this order, are unable to act by reason of absence, disability, or vacancy in office.

Section B. Authority Superseded

This Order of Succession supersedes all prior orders of succession for the Office of Community Planning and Development, including the one published at 77 FR 31974 on May 30, 2012.

Authority: Section 7(d), Department of Housing and Urban Development Act, 42 U.S.C. 3535(d).

Dated: April 13, 2015.

Julián Castro,

Secretary of Housing and Urban Development.

[FR Doc. 2015–08950 Filed 4–17–15; 8:45 am]

BILLING CODE 4210–67–P

DEPARTMENT OF HOUSING AND URBAN DEVELOPMENT

[Docket No. FR–5870–D–01]

Consolidated Delegation of Authority for the Office of Housing—Federal Housing Administration (FHA)

AGENCY: Office of the Secretary, HUD.

ACTION: Notice of revocation and delegation of authority.

SUMMARY: Section 7(d) of the Department of Housing and Urban Development (HUD) Act, as amended, authorizes the Secretary to delegate functions, powers and duties as the Secretary deems necessary. In this delegation of authority, the Secretary delegates authority to the Assistant Secretary for Housing—Federal Housing Commissioner, the Principal Deputy Assistant Secretary for Housing, the General Deputy Assistant Secretary for Housing and the Associate General Deputy Assistant Secretary for Housing, for the administration of certain Office of Housing programs. This delegation revokes and supersedes all prior delegations of authority, including the delegation published on June 20, 2012.

DATES: Effective upon date of signature.

FOR FURTHER INFORMATION CONTACT: Laura M. Marin, Associate General Deputy Assistant Secretary, Office of the Assistant Secretary for Housing—Federal Housing Commissioner, Department of Housing and Urban Development, 451 7th Street SW., Room 9106, Washington, DC 20410; telephone number 202–708–2601. (This is not a toll-free number.) Persons with hearing or speech impairments may call HUD's toll-free Federal Relay Service at 800–877–8339.

SUPPLEMENTARY INFORMATION: This notice supersedes the prior consolidated delegation of authority dated June 20, 2012. First, authority previously delegated to the Assistant Secretary for Housing—Federal Housing Commissioner (Assistant Secretary) and General Deputy Assistant Secretary for Housing—Deputy Federal Housing Commissioner (General Deputy Assistant Secretary), with regard to regulation of government-sponsored enterprises (GSEs) under the Federal Housing Enterprises Financial Safety and Soundness Act of 1992 (12 U.S.C. 4501 *et seq.*) (FHEFSSA), is no longer included in the delegation to the aforesaid official. Except for certain fair housing oversight requirements retained by HUD, programmatic regulation of the GSEs was transferred to the Federal Housing Finance Agency by the Housing and Economic Recovery Act of 2008 (Pub. L. 110–289, approved July 30, 2008). The Secretary's authority for those oversight requirements has been delegated in a separate document to the Assistant Secretary for Fair Housing. Second, this delegation has been updated (in sections B through E) to include legislative authority enacted since the 2006 publication of consolidated delegations for the Office of Housing and includes a new overall category for risk management and regulatory functions and authorities. With respect to regulatory authorities, as of July 21, 2011, the Dodd-Frank Wall Street Reform and Consumer Protection Act (Pub. L. 111–203, approved July 21, 2010) transferred from the Department of Housing and Urban Development to a new Consumer Financial Protection Bureau, all powers and duties vested in HUD to carry out the Real Estate Settlement Procedures Act of 1974 (12 U.S.C. 2601–2617); the Secure and Fair Enforcement for Mortgage Licensing Act of 2008 (Title V of Pub. L. 110–289, approved July 30, 2008); and the Interstate Land Sales Full Disclosure Act (15 U.S.C. 1701 *et seq.*).

Nevertheless, HUD may be responsible for certain actions undertaken prior to the transfer date but not completed, or for other residual duties after the transfer of regulatory functions. As a result, this notice contains delegations of authority under the statutes cited above. Finally, the general delegation below includes the position of the Associate General Deputy Assistant Secretary for Housing.

Section A. General Delegation of Authority

Unless otherwise stated, the Assistant Secretary, the Principal Deputy Assistant Secretary, the General Deputy Assistant Secretary and the Associate General Deputy Assistant Secretary for Housing are each delegated the power and authority of the Secretary of HUD with respect to all housing programs and functions, including, but not limited to, those listed below in Sections B through F, with authority to redelegate to officials of the Department, unless otherwise specified. Only the Assistant Secretary for Housing is delegated the authority to issue a final regulation or a Notice of Funding Availability (NOFA). The authority delegated herein to the Assistant Secretary, Principal Deputy Assistant Secretary and General Deputy Assistant Secretary for Housing includes the authority to waive regulations and statutes.

Section B. Multifamily, Healthcare, and Other Authority Delegated

The authority of the Secretary of HUD with respect of Office of Housing's multifamily housing, healthcare, and certain other programs and functions that are authorized under the following:

(1) Titles I, II, V, VI, VII, VIII, IX, and XI of the National Housing Act (12 U.S.C. 1701 *et seq.*) in exercising the power and authority delegated under this section;

(2) Section 202 of the Housing Act of 1959, as such section existed prior to

the enactment of the Cranston-Gonzalez National Affordable Housing Act (12 U.S.C. 1701q note), as amended by section 811 of the American Homeownership and Economic Opportunity Act of 2000 (Pub. L. 106–561);

(3) Section 202 of the Housing Act of 1959 (12 U.S.C. 1701q), as amended by Subtitle A of Title VIII of the National Affordable Housing Act of 1990, with respect to the provision of capital advances and rental housing assistance for supportive housing for the elderly, as amended by Subtitle C of the American Homeownership and Economic Opportunity Act of 2000 (Pub. L. 106–561);

(4) The Supportive Housing for Elderly Act of 2010 (Pub. L. 111–372);

(5) Section 101 of the Housing and Urban Development Act of 1965 (12 U.S.C. 1701s); with respect to the Rent Supplement program for disadvantaged persons, including the authority to administer contracts and requirements for rent supplements;

(6) Section 8 Housing assistance under the United States Housing Act of 1937 (42 U.S.C. 1437 *et seq.*), including the authority delegated under Executive Order 11196 to approve the undertaking of any annual contribution, grant, or loan, or any agreement or contract for any annual contribution, grant or loan;

(7) Section 808 of the National Affordable Housing Act (Pub. L. 101–625), and sections 671, 672, 674, 676, and 677 of the Housing and Community Development Act of 1992 (42 U.S.C. 13631), with respect to the provision of service coordinators in federally assisted housing;

(8) Sections 201, 202, 203, and 204 of the Housing and Community Development Amendments of 1978, and amendment contained in Title I of the Multifamily Housing Property Disposition Reform Act of 1994 (Pub. L. 103–233, 12 U.S.C. 1701 note);

(9) The Housing Development Grant Program, pursuant to Section 17 of the United States Housing Act of 1937 (42 U.S.C. 1437o);

(10) Section 4(d) of the Department of Housing and Urban Development Act (42 U.S.C. 3533), which provides the Assistant Secretary is the Assistant to the Secretary who shall be responsible for providing information and advice to nonprofit organizations desiring to sponsor housing projects assisted under programs administered by the Department;

(11) The authority of the Secretary under the Revolving Fund for Liquidating Programs (12 U.S.C. 1701q) to manage, repair, lease, and otherwise take all actions necessary to protect the financial interest of the Secretary in properties as to which the Secretary is mortgagee-in-possession; and to manage, repair, complete, remodel and convert, administer, dispose of, lease, sell, or exchange for cash or credit at public or private sale; and to pay annual sums in lieu of taxes on, obtain insurance against loss on, and otherwise deal with properties as to which the Secretary has acquired title based on a loan made under the former Section 312 Rehabilitation Loan Program;

(12) The function of the Secretary under Section 7(i)(3) of the Department of Housing and Urban Development Act (42 U.S.C. 3535(i)(3)), concerning the sale, exchanges, or lease of real or personal property and the sale or exchange of securities or obligations with respect to any multifamily project;

(13) Title IV of the Housing and Community Development Amendments of 1978 (42 U.S.C. 8001 *et seq.*);

(14) The authority to endorse any checks or drafts in payment of insurance losses on which the United States of America, acting by and through the Secretary or the Secretary's successors or assigns, is a payee (joint or otherwise) in connection with the disposition of the government's interest in property or lease of such property;

(15) Section 2 of the Housing and Urban Development Act of 1968 (12 U.S.C. 3701–3717);

(16) The Multifamily Mortgage Foreclosure Act of 1981 (12 U.S.C. 3701–3717);

(17) The authority to act as an Attesting Officer with authorization to cause the seal of the Department of Housing and Urban Development to be affixed to such documents as may require its application and to certify that a copy of any book, record, paper, microfilm, electronic document, or any other document is a true copy of that in the files of the Department;

(18) The Congregate Housing Services Program under Section 802 of the National Affordable Housing Act (42 U.S.C. 8011);

(19) The HOPE for Homeownership of Multifamily Units Program under Title IV, Subtitle B, of the National Affordable Housing Act (42 U.S.C. 12701, 12871);

(20) The Multifamily Risk Sharing Programs pursuant to Section 542 of the Housing and Community Development Act of 1992 (Pub. L. 102–550, October 28, 1992);

(21) Title II of the Housing and Community Development Act of 1987 (12 U.S.C. 1715 note), and the Emergency Low-Income and Housing Preservation Act of 1987 (ELIHPA), as each is amended by Subtitle A of Title VI of the National Affordable Housing Act (12 U.S.C. 4101 *et seq.*) and the Low-Income Housing Preservation and Resident Homeownership Act of 1990 (LIHPRHA), as further amended by Title III of the Housing and Community Development Act of 1992 (12 U.S.C. 4141 *et seq.*);

(22) Section 811 of Subtitle B of Title VIII of the National Affordable Housing Act of 1990 (42 U.S.C. 8013), with respect to the provision of capital advances and rental housing assistance for supportive housing for persons with disabilities as amended by Subsection C of Title VIII of the American Homeownership and Economic Opportunity Act of 2000 (Pub. L. 111–374);

(23) Section 581 of the National Affordable Housing Act of 1990 (Pub. L. 101–625) and Chapter 2, Subtitle C of Title V of the Anti-Drug Abuse Act of 1988 (42 U.S.C. 1190 *et seq.*), relating to the federally assisted low-income housing drug elimination program;

(24) The Portfolio Reengineering Demonstration Program authorized under Sections 211 and 212 of the Departments of Veterans Affairs and Housing and Urban Development, and Independent Agencies Appropriations Act, 1997 (Pub. L. 104–204, 110 Stat. 2874, approved September 26, 1997), as reauthorized and amended by Section 522(b) of the Departments of Veterans Affairs and Housing and Urban Development, and Independent Agencies Appropriations Act, 1998 (Pub. L. 105–65, 111 Stat. 1344, 1446, approved October 27, 1997) (42 U.S.C. 1437f note); all provisions of the Mark-to-Market Extensions Act of 2001 (Title VI of Pub. L. 107–116); and all provisions of the Multifamily Assisted Housing Reform and Affordability Act (MAHRA) (42 U.S.C. 1437f note);

(25) The authority to take actions necessary to ensure that participants in HUD programs under the jurisdiction of the Assistant Secretary for Housing comply with the regulations, rules, and procedures of the Department including, but not limited to, imposing limited denials of participation;

(26) The Rental Assistance Program authorized by Section 236 of the National Housing Act (12 U.S.C. 1715z–1);

(27) The Rural Health Care Capital Access Act of 2006 (Pub. L. 109–240);

(28) The Preservation Approval Process Improvement Act of 2007 (Pub. L. 110–35);

(29) The FHA Loan Limit Adjustment Act of 2003, as contained in Section 302 of Public Law 108–186;

(30) Sections 2832, 2834, and 2835(b) of Title VIII, Subtitle B, of the Housing

Economic Recovery Act of 2008 (Pub. L. 110–289);

(31) The management and disposition of HUD-owned multifamily projects and HUD-held mortgages and the provision of grants and loans, as provided under Section 204(a) of the Departments of Veterans Affairs and Housing and Urban Development, and Independent Agencies Appropriations Act, 1997 (Pub. L. 104–204) (12 U.S.C. 1715z–11a);

(32) Section 3 of the Housing and Urban Development Act of 1968 (12 U.S.C. 1701u);

(33) The authority to foreclose mortgages, sell foreclosed properties, and modify terms of contract pursuant to Section 7(i) of the Department of Housing and Urban Development Act;

(34) The authority to establish fees and charges pursuant to Section 7(j) of the Department of Housing and Urban Development Act (42 U.S.C. 3535(j));

(35) The authority to accept voluntary services pursuant to Section 7(k) of the Department of Housing and Urban Development Act (42 U.S.C. 3535(k));

(36) The authority to carry out the provisions of the Legacy Act of 2003 (Pub. L. 108–186);

(37) The authority to appoint a Special Assistant for Cooperative Housing pursuant to section 102(h) of the Housing Amendments of 1955 (12 U.S.C. 1715e note); and

(38) The Self-Help Housing Property Disposition Program authorized under the Federal Property and Administrative Services Act of 1949, as amended by Public Housing 105–50, approved October 6, 1997 (40 U.S.C. 550(f)).

Section C. Single Family and Other Authority Delegated

The authority of the Secretary of HUD with respect to the Office of Housing's single family housing and certain programs, including regulatory programs, and functions, and the authority with respect to mortgagee activities (including Title I lenders) for single family programs that are authorized under the following:

(1) Title I, II, V, VI, VIII and IX of the National Housing Act (12 U.S.C. 1701 *et seq.*);

(2) The HOPE for Homeowners Act of 2008, as contained in Division A, Title IV, of the Housing and Economic Recovery Act of 2008 (Pub. L. 110–289), as amended by section 202 of the Helping Families Save their Homes Act of 2009 (Pub. L. 111–22);

(3) Section 203 of the Helping Families Save their Homes Act of 2009 (Pub. L. 111–22);

(4) The authority to sell, exchange, or lease real or personal property and to sell or exchange securities of obligation with respect to any single-family property pursuant to Section 7(i)(3) of the Department of Housing and Urban Development Act;

(5) The authority to endorse any checks or drafts in payment of insurance losses on which the United States of America, acting by and through the Secretary or his/her successors or assigns, is a payee (joint or otherwise), in connection with the disposition of the government's interest in property or lease of such property;

(6) The authority of the Secretary under the Revolving Fund for Liquidating Programs (12 U.S.C. 1701q) to manage, repair, lease, and otherwise take all actions necessary to protect the financial interest of the Secretary in mortgagee-in-possession and to manage, repair, complete, remodel and convert, administer, dispose of, lease, sell, or exchange for cash or credit at public or private sale, pay annual sums in lieu of taxes on, obtain insurance against loss on, and otherwise deal with properties as to which the Secretary has acquired title based on a loan under the former Section 312 Rehabilitation Loan Program;

(7) The Nehemiah Housing Opportunity grant program in Sections 609–614 of the Housing and Community Development Act of 1987 (12 U.S.C. 1715e);

(8) The authority to take actions necessary to ensure that participants in HUD programs comply with regulations, rules, and procedures of the Department including, but not limited to, imposing limited denials of participation;

(9) The authority to foreclose mortgages, sell foreclosed properties, and modify terms of contract pursuant to Section 7(i) of the Department of Housing and Urban Development Act;

(10) The authority to establish fees and charges pursuant to Section 7(j) of the Department of Housing and Urban Development Act (42 U.S.C. 3535(j));

(11) The authority to accept voluntary services pursuant to Section 7(k) of the Department of Housing and Urban Development Act (42 U.S.C. 3535(k)); and

(12) The authority to implement and administer the Emergency Homeowners' Loan Program with the Emergency Homeowners' Relief Act, as amended (12 U.S.C. 2701 *et seq.*), in cooperation with HUD's Office of Policy Development and Research and HUD's Office of the Chief Financial Officer.

Section D. Housing Counseling and Other Authority Delegated

The authority of the Secretary of HUD with respect to the Office of Housing Counseling and certain programs, including regulatory programs, and functions, and the authority with respect to Housing Counseling approval and certification activities that are authorized under the following:

(1) The authority to carry out sections 1451(a) and (b) of the Dodd-Frank Wall Street Reform and Consumer Protection Act of 2010; and

(2) Section 106 of the Housing and Urban Development Act of 1968 (12 U.S.C. 1701x).

Section E. Financial Operations and Management Controls Authority Delegated

(1) The authority to provide financial management for programs administered by the Assistant Secretary;

(2) The authority to formulate and develop financial management and internal control policies; to oversee compliance by the Office of Housing and Federal Housing Administration (FHA) with OMB Circulars A–123 (Management and Accountability Control), A–127 (Financial Management Systems), and A–130 (Federal Information Resources) as they apply to Housing and FHA financial and program operations; establish and supervise the development and execution of uniform Office of Housing and FHA policies, principles, and procedures necessary for financial management; to issue directions and implement these policies and modifications to existing products;

(3) The authority to maintain the FHA General Ledger and the chart of accounts of the FHA funds;

(4) The authority to establish and maintain appropriate financial management controls over Office of Housing and FHA programs; to provide technical guidance to organizational elements under the Assistant Secretary in the field of accounting and fiscal matters; to track Office of Housing and FHA financial activities against budget and business plan; to coordinate the development and maintenance of integrated financial management systems needed for accounting and management of housing and FHA programs;

(5) The authority to prepare reports; to report to the Assistant Secretary, other offices, the Department's Chief Financial Officer, and HUD regional and field staff on the financial condition of FHA mortgage insurance programs; to publish and annual FHA report reflecting prior year accomplishments and the audited financial statements; and to prepare internal reports on the financial condition of Office of Housing and FHA programs;

(6) The authority to develop and maintain integrated financial management systems, and to direct studies and audits of the accounting and financial information and systems functions;

(7) The authority to prepare and execute policies and systems to measure the financial and actuarial soundness of Office of Housing and FHA programs; and to ensure the conduct of an independent annual audit of the FHA program financial statements;

(8) The authority to obtain reports, information, advice, and assistance in carrying out assigned functions; and to develop financial management information to assist in developing budget, financial, accounting, and cost-accounting information on a timely basis;

(9) The authority to direct the investment of money held in the various Office of Housing/FHA insurance funds that is not needed for current operations, in bonds or other obligations of the United States, or in bonds or other obligations whose principal interest is guaranteed by the United States; and

(10) The authority to borrow funds from the Department of the Treasury to facilitate credit reform programs.

Section F. Risk Management and Regulatory Functions—Authority Delegated

(1) To establish, impose, and maintain all appropriate risk management policies, activities, and controls for programs carried out by the Assistant Secretary, including analyzing the risk management and evaluation functions, performing front-end risk assessments prior to implementation of programs, and implementing the regulatory requirement contained in section 941(b) of the Dodd-Frank Wall Street Reform and Consumer Protection Act of 2010 relating to risk retention regulations;

(2) The Interstate Land Sales Full Disclosure Act, Title XIV of the Housing and Urban Development Act of 1968 (15 U.S.C. 1701 *et seq.*), as proscribed by sections 1062, 1063, and 1064 of the Dodd-Frank Wall Street Reform and Consumer Protection Act of 2010 (Pub. L. 111–203);

(3) The Real Estate Settlement Procedures Act of 1974 (12 U.S.C. 2601 *et seq.*), as proscribed by sections 1062, 1063, and 1064 of the Dodd-Frank Wall Street Reform and Consumer Protection Act of 2010 (Pub. L. 111–203);

(4) The Secure and Fair Enforcement for Mortgage Licensing Act of 2008, as contained in Division A, Title V, of the Housing and Economic Recovery Act of 2008 (Pub. L. 110–289), and proscribed by sections 1062, 1063, and 1064 of the Dodd-Frank Wall Street Reform Act of 2010 (Pub. L. 111–203);

(5) All matters and requirements of the National Manufactured Housing Construction and Safety Standards Act of 1974 and Title VI of the Housing and Community Development Act of 1974 (42 U.S.C. 5401–5426).

Section G. Authority Excepted

Authority excepted from this delegation of authority from the Secretary of Housing and Urban Development to the Assistant Secretary, the Principal Deputy Assistant Secretary, the General Deputy Assistant Secretary and the Associate General Deputy Assistant Secretary for Housing is the authority to sue and be sued.

Section H. Authority to Redelegate

In accordance with a written redelegation of authority, the Assistant Secretary, the Principal Deputy Assistant Secretary, the General Deputy Assistant Secretary and the Associate General Deputy Assistant Secretary for Housing may further redelegate specific authority. Redelegated authority to Housing Deputy Assistant Secretaries or other ranking Housing officials does not supersede the authority of the Assistant Secretary as designee of the Secretary. The redelegations published in 77 FR 37237, 77 FR 37240, 77 FR 37241, 77 FR 37248, 77 FR 37250, 77 FR 37252 and the redelegation published on January 3, 2013 at 78 FR 317 remain in effect, including amendments thereto.

Section I. Authority Superseded

The previous delegations of authority from the Secretary of HUD to the Assistant Secretary for Housing are hereby revoked and superseded by this delegation of authority, including the previous delegation of authority for Housing published on June 20, 2012 at 77 FR 37234.

Section J. Conclusive Evidence of Authority

The execution of any instrument or document, which purports to relinquish or transfer the Secretary's right to, title to, or interest in, real or personal property, by an employee of the Department of Housing and Urban Development or other official or officials to whom the Secretary's authority under section 204(g) of the National Housing Act is delegated under this notice shall be conclusive evidence of the authority of such employee to act for the Secretary in executing such instrument or document.

Authority: Section 7(d), Department of Housing and Urban Development Act (42 U.S.C. 3535(d)).

Dated: April 13, 2015.

Julián Castro,

Secretary of Housing and Urban Development.

[FR Doc. 2015–08946 Filed 4–17–15; 8:45 am]

BILLING CODE 4210–67–P

DEPARTMENT OF THE INTERIOR

Fish and Wildlife Service

[FWS–R7–R–2015–N074; FF07R08000F–XRS–1263–0700000–156]

Information Collection Request Sent to the Office of Management and Budget (OMB) for Approval; Alaska Guide Service Evaluation

AGENCY: Fish and Wildlife Service, Interior.

ACTION: Notice; request for comments.

SUMMARY: We (U.S. Fish and Wildlife Service) have sent an Information Collection Request (ICR) to OMB for review and approval. We summarize the ICR below and describe the nature of the collection and the estimated burden and cost. This information collection is scheduled to expire on May 31, 2015. We may not conduct or sponsor and a person is not required to respond to a collection of information unless it displays a currently valid OMB control number. However, under OMB regulations, we may continue to conduct or sponsor this information collection while it is pending at OMB.

DATES: You must submit comments on or before May 20, 2015.

ADDRESSES: Send your comments and suggestions on this information collection to the Desk Officer for the Department of the Interior at OMB–OIRA at (202) 395–5806 (fax) or *OIRA_Submission@omb.eop.gov* (email). Please provide a copy of your comments to the Service Information Collection Clearance Officer, U.S. Fish and Wildlife Service, MS BPHC, 5275 Leesburg Pike, Falls Church, VA 22041–3803 (mail), or *hope_grey@fws.gov* (email). Please include ''1018–0141'' in the subject line of your comments.

FOR FURTHER INFORMATION CONTACT: To request additional information about this ICR, contact Hope Grey at *hope_grey@fws.gov* (email) or 703–358–2482 (telephone). You may review the ICR online at *http://www.reginfo.gov.* Follow the instructions to review Department of the Interior collections under review by OMB.

SUPPLEMENTARY INFORMATION:

Information Collection Request

OMB Control Number: 1018–0141.

Title: Alaska Guide Service Evaluation.

Service Form Number: 3–2349.

Type of Request: Extension of a currently approved collection.

Description of Respondents: Clients of permitted commercial guide service providers.

Respondent's Obligation: Voluntary.

Frequency of Collection: One time, following use of commercial guide services.

Estimated Annual Number of Respondents: 264.

Estimated Total Annual Responses: 264.

Estimated Time per Response: 15 minutes.

Estimated Total Annual Burden Hours: 66.

Estimated Annual Nonhour Burden Cost: None.

Abstract: We collect information on FWS Form 3–2349 (Alaska Guide Service Evaluation) to help us evaluate commercial guide services on our national wildlife refuges in the State of Alaska (State). The National Wildlife Refuge Administration Act of 1966, as amended (16 U.S.C. 668dd–ee), authorizes us to permit uses, including commercial visitor services, on national wildlife refuges when we find the activity to be compatible with the purposes for which the refuge was established. With the objective of making available a variety of quality visitor services for wildlife-dependent recreation on National Wildlife Refuge System lands, we issue permits for commercial guide services, including big game hunting, sport fishing, wildlife viewing, river trips, and other guided activities. We use FWS Form 3–2349 as a method to:

- Monitor the quality of services provided by commercial guides.
- Gauge client satisfaction with the services.
- Assess the impacts of the activity on refuge resources.

The client is the best source of information on the quality of commercial guiding services. We collect:

- Client name.
- Guide name(s).
- Type of guided activity.
- Dates and location of guided activity.
- Information on the services received such as the client's expectations, safety, environmental impacts, and client's overall satisfaction.

We encourage respondents to provide any additional comments that they wish regarding the guide service or refuge experience, and ask whether or not they wish to be contacted for additional information.

The above information, in combination with State-required guide activity reports and contacts with guides and clients in the field, provides a comprehensive method for monitoring permitted commercial guide activities. A regular program of client evaluation helps refuge managers detect potential problems with guide services so that we can take corrective actions promptly. In addition, we use this information during the competitive selection process for big game and sport fishing guide permits to evaluate an applicant's ability to provide a quality guiding service.

Comments Received and Our Responses

Comments: On February 2, 2015, we published in the **Federal Register** (80 FR 5574) a notice of our intent to request that OMB renew approval for this information collection. In that notice, we solicited comments for 60 days, ending on April 3, 2015. We did not receive any comments.

Request for Public Comments

We again invite comments concerning this information collection on:

- Whether or not the collection of information is necessary, including whether or not the information will have practical utility;
- The accuracy of our estimate of the burden for this collection of information;
- Ways to enhance the quality, utility, and clarity of the information to be collected; and
- Ways to minimize the burden of the collection of information on respondents.

Comments that you submit in response to this notice are a matter of public record. Before including your address, phone number, email address, or other personal identifying information in your comment, you should be aware that your entire comment, including your personal identifying information, may be made publicly available at any time. While you can ask OMB in your comment to withhold your personal identifying information from public review, we cannot guarantee that it will be done.

Dated: April 15, 2015.

Tina A. Campbell,

Chief, Division of Policy, Performance, and Management Programs, U.S. Fish and Wildlife Service.

[FR Doc. 2015–08976 Filed 4–17–15; 8:45 am]

BILLING CODE 4310–55–P

DEPARTMENT OF THE INTERIOR

Bureau of Land Management

[ES–030–1430–FQ; MIES–012677]

Public Land Order No. 7835; Revocation of the Withdrawal Established by Executive Order Dated August 24, 1842; Michigan

AGENCY: Bureau of Land Management, Interior.

ACTION: Public Land Order.

SUMMARY: This order revokes in its entirety the withdrawal established by an Executive Order as to 168.05 acres of public land on Thunder Bay Island in Lake Huron withdrawn from all forms of appropriation under the public land laws and reserved for use by the United States Coast Guard for lighthouse purposes. The reservation is no longer needed. This order returns administrative jurisdiction to the Bureau of Land Management and opens the land to the operation of the public land laws, subject to valid existing rights and other segregations of record.

DATES: *Effective:* May 20, 2015.

FOR FURTHER INFORMATION CONTACT: Carol Grundman, Realty Specialist, Bureau of Land Management, Northeastern States Field Office, 626 East Wisconsin Avenue, Suite 200, Milwaukee, Wisconsin 53202, 414–297–4447. Persons who use a telecommunications device for the deaf (TDD) may call the Federal Information Relay Service (FIRS) at 1–800–877–8339 to contact the above individual. The FIRS is available 24 hours a day, 7 days a week, to leave a message or question with the above individual. You will receive a reply during normal business hours.

SUPPLEMENTARY INFORMATION: The United States Coast Guard has determined that the reservation for the Thunder Bay Island Light Station is no longer needed and has requested the revocation. The United States Coast Guard has requested a right of access to operate and maintain their aid to navigation. The land has been and will remain open to mineral leasing. Michigan is not subject to the 1872 Mining Law.

Order

By virtue of the authority vested in the Secretary of the Interior by Section 204 of the Federal Land Policy and Management Act of 1976, 43 U.S.C. 1714, it is ordered as follows:

1. The withdrawal established by Executive Order dated August 24, 1842, which reserved the following described

public land on Thunder Bay Island for lighthouse purposes, is hereby revoked in its entirety:

Michigan Meridian

T. 30 N., R. 10 E.,
Sec. 3.

T. 31 N., R. 10 E.,
Sec. 33, lot 5;
Sec. 34, lots 1, 2, and 3.

The area described contains 168.05 acres in Alpena County.

2. At 9 a.m. on May 20, 2015, subject to valid existing rights, the provisions of existing withdrawals, other segregations of record, and the requirements of applicable law, the land described in Paragraph 1 shall be opened to the operation of the public land laws generally, but not the United States mining laws since Michigan is not subject to the 1872 Mining Law. All valid applications received at or prior to 9 a.m. on May 20, 2015, shall be considered as simultaneously filed at that time. Those received thereafter shall be considered in the order of filing.

Dated: April 5, 2015.

Janice M. Schneider,

Assistant Secretary—Land and Minerals Management.

[FR Doc. 2015–08925 Filed 4–17–15; 8:45 am]

BILLING CODE 4310–GJ–P

DEPARTMENT OF THE INTERIOR

Bureau of Land Management

[15XL LLIDB00100 LF1000000.HT0000 LXSS020D0000 241A 4500075005]

Notice of Availability of the Final Owyhee Canyonlands Wilderness and Wild & Scenic Rivers Management Plan, Idaho

AGENCY: Bureau of Land Management, Interior.

ACTION: Notice of availability.

SUMMARY: In accordance with the Wilderness Act of 1964 and the Wild and Scenic Rivers Act of 1968, the Bureau of Land Management (BLM) has signed a Decision Record implementing the Final Owyhee Canyonlands Wilderness and Wild & Scenic Rivers Management Plan (Plan), and by this notice is announcing its availability.

DATES: Any party adversely affected will have 30 days from the date of publication of this notice in the **Federal Register** to appeal the BLM's decision to the Interior Board of Land Appeals pursuant to 43 CFR part 4.

ADDRESSES: An electronic version of the Plan may be found online at: *http://www.blm.gov/id/st/en/prog/nepa_register/Owyhee-wilderness-WSR_plan.html.* Interested parties may also view a copy of the Plan at the BLM Owyhee Field Office, 20 First Avenue West, Marsing, Idaho 83639; the BLM Boise District Office, 3948 Development Avenue, Boise, Idaho 83705; the BLM Twin Falls District Office, 2536 Kimberly Road, Twin Falls, Idaho 83301; the BLM Idaho State Office, 1387 South Vinnell Way, Boise, Idaho 83709; and at local libraries in Boise, Gooding, Grand View, Mountain Home, Murphy, and Nampa, Idaho; and Jordan Valley, Oregon.

FOR FURTHER INFORMATION CONTACT: John Sullivan, Wilderness Project Lead, telephone 208–384–3300; address BLM Boise District Office, 3948 Development Avenue, Boise, ID 83705; email *jsullivan@blm.gov.* Persons who use a telecommunications device for the deaf (TDD) may call the Federal Information Relay Service (FIRS) at 1–800–877–8339 to contact the above individual during normal business hours. The FIRS is available 24 hours a day, 7 days a week, to leave a message or question with the above individual. You will receive a reply during normal business hours.

SUPPLEMENTARY INFORMATION: This notice is published in conformance with Sec. 1274(d)(1) of the Wild and Scenic Rivers Act of 1968 (16 U.S.C. 1271–1287). The Owyhee Canyonlands Wilderness and Wild & Scenic Rivers Management Plan establishes the framework for managing approximately 517,000 acres of wilderness and 325 miles of wild and scenic rivers in Owyhee County, southwestern Idaho. The Plan provides direction for actions, land use guidelines and restrictions designed to preserve wilderness character and protect and enhance river values, as mandated by the Wilderness Act (16 U.S.C. 1133(b)) and the Wild and Scenic Rivers Act (16 U.S.C. 1281(a)). The Plan identifies conditions and opportunities that will be managed for at least the next 10 years, or as changes in wilderness character, wild and scenic river values, and/or resource conditions require.

Areas managed by the Plan include: The Big Jacks Creek, Little Jacks Creek, Bruneau-Jarbidge Rivers, North Fork Owyhee, Owyhee River, Pole Creek Wilderness Areas, and the 16 wild and scenic river segments that flow through them.

Public scoping meetings were held in 2011 to inform the public of the regulations and policies associated with wilderness and wild and scenic river management. The BLM solicited input during these meetings, and for several weeks thereafter, concerning wilderness and wild and scenic river-related issues and concerns, as well as the development of alternatives and management actions proposed for the Plan.

The BLM considered and, where appropriate, incorporated public and internal staff comments on the Draft Plan into the Final Plan. Comments resulted in additional clarifying text, as well as refinement of management direction for some activities.

The final Plan includes limitations on the size of groups rafting the wild and scenic rivers, prescriptions regarding the use of temporary hunting blinds, provisions for trapping under State and Federal regulations, and processes to consider the proposed use of motorized and mechanized vehicles and equipment.

Authority: 16 U.S.C. 1274(d)(1), 43 CFR part 6300.

James M. Fincher,

Boise District Manager.

Michael Courtney,

Twin Falls District Manager.

[FR Doc. 2015–08928 Filed 4–17–15; 8:45 am]

BILLING CODE 4310–GG–P

DEPARTMENT OF THE INTERIOR

National Park Service

[NPS–WASO–NRNHL–18041; PPWOCRADI0, PCU00RP14.R50000]

National Register of Historic Places; Notification of Pending Nominations and Related Actions

Nominations for the following properties being considered for listing or related actions in the National Register were received by the National Park Service before March 28, 2015. Pursuant to section 60.13 of 36 CFR part 60, written comments are being accepted concerning the significance of the nominated properties under the National Register criteria for evaluation. Comments may be forwarded by United States Postal Service, to the National Register of Historic Places, National Park Service, 1849 C St. NW., MS 2280, Washington, DC 20240; by all other carriers, National Register of Historic Places, National Park Service, 1201 Eye St. NW., 8th floor, Washington, DC 20005; or by fax, 202–371–6447. Written or faxed comments should be submitted by May 5, 2015. Before including your address, phone number, email address, or other personal identifying information in your comment, you should be aware that your entire comment—including your personal

identifying information—may be made publicly available at any time. While you can ask us in your comment to withhold your personal identifying information from public review, we cannot guarantee that we will be able to do so.

Dated: April 6, 2015.

J. Paul Loether,

Chief, National Register of Historic Places/ National Historic Landmarks Program.

ARKANSAS

Garland County

Federal Building—U.S. Post Office and Court House, 100 Reserve St., Hot Springs, 15000205

Phillips County

Federal Building—United States Post Office and Court House, 617 Walnut, Helena, 15000204

Pulaski County

Federal Building, 700 W. Capitol Ave., Little Rock, 15000206

FLORIDA

Alachua County

Axline House, 18507 S. Cty. Rd. 325, Hawthorne, 15000207

Gulf County

Cape San Blas Lighthouse at Port St. Joe, 200 Miss Zola's Dr., Port St. Joe, 15000208

Seminole County

Hopper Academy, 1101 Pine Ave., Sanford, 15000209

Taylor County

First Methodist Episcopal Church, South, 302 N. Jefferson St., Perry, 15000210

MASSACHUSETTS

Hampshire County

Old Chapel, 144 Hicks Way, Amherst, 15000211

MINNESOTA

Grant County

Scofield, Anna J. Memorial Auditorium and Harold E. Thorson Memorial Library, (Federal Relief Construction in Minnesota MPS), 117 Central Ave., N., Elbow Lake, 15000212

Hennepin County

Prospect Park Residential Historic District, Roughly bounded by University & Williams Aves., SE., Emerald St., SE., and I–94, Minneapolis, 15000213

St. Louis County

Duluth Masonic Temple, (Duluth's Central Business District, MPS), 4 W. 2nd St., Duluth, 15000215

MISSOURI

Platte County

Johnston, Stephen, House, 14850 N. Bethel Rd., Platte City, 15000214

MONTANA

Ravalli County

Hayward Lodge, On L. Como, Darby, 15000216

PENNSYLVANIA

Allegheny County

Duquesne Brewing Company, Roughly bounded by S. 21st, S. 23rd & Jane Sts., Harcum & Edwards Ways, Pittsburgh, 15000217

Penn—McKee Hotel, 122 5th Ave., McKeesport, 15000218

Philadelphia County

Wyoming Central Office of the Bell Telephone Company, 4900 N. Broad St., Philadelphia, 15000219

[FR Doc. 2015–08936 Filed 4–17–15; 8:45 am]

BILLING CODE 4312–51–P

INTERNATIONAL TRADE COMMISSION

[Investigation No. 337–TA–914]

Certain Sulfentrazone, Sulfentrazone Compositions, and Processes for Making Sulfentrazone; Notice of Request for Statements on the Public Interest

AGENCY: U.S. International Trade Commission.

ACTION: Notice.

SUMMARY: Notice is hereby given that the presiding administrative law judge (''ALJ'') has issued a Recommended Determination on Remedy and Bonding in the above-captioned investigation. Although the ALJ found no violation of section 337, the ALJ recommends that, in the event that the Commission determines to reverse the finding of no violation, a limited exclusion order should be directed against the respondents with respect to U.S. Patent No. 7,169,952. The Commission is soliciting comments on public interest issues raised by the recommended relief, specifically the limited exclusion order. This notice is soliciting public interest comments from the public only. Parties are to file public interest submissions pursuant to 19 CFR 210.50(a)(4).

FOR FURTHER INFORMATION CONTACT: Robert Needham, Office of the General Counsel, U.S. International Trade Commission, 500 E Street SW., Washington, DC 20436, telephone (202) 708–5468. The public version of the complaint can be accessed on the Commission's electronic docket (EDIS) at *http://edis.usitc.gov,* and will be available for inspection during official business hours (8:45 a.m. to 5:15 p.m.) in the Office of the Secretary, U.S. International Trade Commission, 500 E Street SW., Washington, DC 20436, telephone (202) 205–2000.

General information concerning the Commission may also be obtained by accessing its Internet server (*http://www.usitc.gov*). The public record for this investigation may be viewed on the Commission's electronic docket (EDIS) at *http://edis.usitc.gov.* Hearing-impaired persons are advised that information on this matter can be obtained by contacting the Commission's TDD terminal on (202) 205–1810.

SUPPLEMENTARY INFORMATION: Section 337 of the Tariff Act of 1930 provides that if the Commission finds a violation it shall exclude the articles concerned from the United States:

> unless, after considering the effect of such exclusion upon the public health and welfare, competitive conditions in the United States economy, the production of like or directly competitive articles in the United States, and United States consumers, it finds that such articles should not be excluded from entry.

19 U.S.C. 1337(d)(1). A similar provision applies to cease and desist orders. 19 U.S.C. 1337(f)(1).

The Commission is interested in further development of the record on the public interest in these investigations. Accordingly, members of the public are invited to file submissions of no more than five (5) pages, inclusive of attachments, concerning the public interest in light of the administrative law judge's Recommended Determination on Remedy and Bonding issued in this investigation on April 10, 2015. Comments should address whether issuance of a limited exclusion order in this investigation would affect the public health and welfare in the United States, competitive conditions in the United States economy, the production of like or directly competitive articles in the United States, or United States consumers.

In particular, the Commission is interested in comments that:

(i) Explain how the articles potentially subject to the recommended order are used in the United States;

(ii) Identify any public health, safety, or welfare concerns in the United States relating to the recommended order;

(iii) Identify like or directly competitive articles that complainant, its licensees, or third parties make in the United States which could replace the subject articles if they were excluded;

(iv) Indicate whether complainant, complainant's licensees, and/ or third

party suppliers have the capacity to replace the volume of articles potentially subject to the recommended exclusion order within a commercially reasonable time; and

(v) Explain how the limited exclusion order would impact consumers in the United States.

Written submissions must be filed no later than by close of business on May 18, 2015.

Persons filing written submissions must file the original document electronically on or before the deadlines stated above and submit 8 true paper copies to the Office of the Secretary by noon the next day pursuant to section 210.4(f) of the Commission's Rules of Practice and Procedure (19 CFR 210.4(f)). Submissions should refer to the investigation number (''Inv. No. 914'') in a prominent place on the cover page and/or the first page. (*See* Handbook for Electronic Filing Procedures, *http://www.usitc.gov/secretary/fed_reg_notices/rules/handbook_on_electronic_filing.pdf*). Persons with questions regarding filing should contact the Secretary (202–205–2000).

Any person desiring to submit a document to the Commission in confidence must request confidential treatment. All such requests should be directed to the Secretary to the Commission and must include a full statement of the reasons why the Commission should grant such treatment. *See* 19 CFR 201.6. Documents for which confidential treatment by the Commission is properly sought will be treated accordingly. A redacted non-confidential version of the document must also be filed simultaneously with the any confidential filing. All non-confidential written submissions will be available for public inspection at the Office of the Secretary and on EDIS.

This action is taken under the authority of section 337 of the Tariff Act of 1930, as amended (19 U.S.C. 1337), and in part 210 of the Commission's Rules of Practice and Procedure (19 CFR part 210).

By order of the Commission.
Issued: April 15, 2015.

Lisa R. Barton,

Secretary to the Commission.

[FR Doc.2015–08998 Filed 4–17–15; 8:45 am]

BILLING CODE 7020–02–P

INTERNATIONAL TRADE COMMISSION

[USITC SE–15–014]

Government In The Sunshine Act Meeting Notice

AGENCY HOLDING THE MEETING: United States International Trade Commission.

TIME AND DATE: April 28, 2015 at 11:00 a.m.

PLACE: Room 101, 500 E Street SW., Washington, DC 20436, Telephone: (202) 205–2000.

STATUS: Open to the public,

MATTERS TO BE CONSIDERED:

1. Agendas for future meetings: None.
2. Minutes.
3. Ratification List.
4. Vote in Inv. Nos. 701–TA–463 and 731–TA–1159 (Review)(Oil Country Tubular Goods from China). The Commission is currently scheduled to complete and file its determinations and views of the Commission on May 7, 2015.
5. Vote in Inv. Nos. 731–TA–1014, 1016, and 1017 (Second Review)(Polyvinyl Alcohol from China, Japan, and Korea). The Commission is currently scheduled to complete and file its determinations and views of the Commission on May 12, 2015.
6. Outstanding action jackets: none.

In accordance with Commission policy, subject matter listed above, not disposed of at the scheduled meeting, may be carried over to the agenda of the following meeting.

By order of the Commission:

Issued: April 15, 2015.

William R. Bishop,

Supervisory Hearings and Information Officer.

[FR Doc. 2015–09174 Filed 4–16–15; 4:15 pm]

BILLING CODE 7020–02–P

DEPARTMENT OF JUSTICE

[OMB Number 1122–0006]

Agency Information Collection Activities; Proposed eCollection eComments Requested; Extension of an Approved Collection Semi-Annual Progress Report for Grantees From the Grants To Encourage Arrest Policies and Enforcement of Protection Orders Program

AGENCY: Office on Violence Against Women, Department of Justice.

ACTION: 30-Day notice.

SUMMARY: The Department of Justice (DOJ), Office on Violence Against Women, will be submitting the following information collection request to the Office of Management and Budget (OMB) for review and approval in accordance with the Paperwork Reduction Act of 1995. The proposed information collection was previously published in the **Federal Register** Volume 80, Number 26, Pages 7034–7035, on February 9, 2015, allowing for a 60 day comment period.

DATES: Comments are encouraged and will be accepted for an additional 30 days until May 20, 2015.

FOR FURTHER INFORMATION CONTACT: If you have comments especially on the estimated public burden or associated response time, suggestions, or need a copy of the proposed information collection instrument with instructions or additional information, please contact Cathy Poston, Attorney Advisor, Office on Violence Against Women, 145 N Street NE., Washington, DC 20530 (phone: 202–514–5430). Written comments and/or suggestions can also be directed to the Office of Management and Budget, Office of Information and Regulatory Affairs, Attention Department of Justice Desk Officer, Washington, DC 20530 or sent to *OIRA_submissions@omb.eop.gov.*

SUPPLEMENTARY INFORMATION: Written comments and suggestions from the public and affected agencies concerning the proposed collection of information are encouraged. Your comments should address one or more of the following four points:

—Evaluate whether the proposed collection of information is necessary for the proper performance of the functions of the agency, including whether the information will have practical utility;
—Evaluate the accuracy of the agency's estimate of the burden of the proposed collection of information, including the validity of the methodology and assumptions used;
—Enhance the quality, utility, and clarity of the information to be collected; and
—Minimize the burden of the collection of information on those who are to respond, including through the use of appropriate automated, electronic, mechanical, or other technological collection techniques or other forms of information technology, *e.g.,* permitting electronic submission of responses.

Overview of This Information Collection

(1) *Type of Information Collection:* Extension of a currently approved collection.

(2) *Title of the Form/Collection:* Semi-Annual Progress Report for Grantees from the Grants to Encourage Arrest Policies and Enforcement of Protection Orders Program.

(3) *Agency form number:* Form Number: 1122–0006.

(4) *Affected public who will be asked or required to respond, as well as a brief abstract:*

Primary: The approximately 200 grantees from the Grants to Encourage Arrest Policies and Enforcement of Protection Orders Program (Arrest Program).

Abstract: The Arrest Program encourages state, local and tribal governments to treat domestic violence, dating violence, sexual assault and stalking as serious violations of criminal law requiring the coordinated involvement of the entire criminal justice system. Eligible applicants are states and territories, units of local government, Indian tribal governments, and state, local, tribal, and territorial courts.

(5) *An estimate of the total number of respondents and the amount of time estimated for an average respondent to respond/reply:* It is estimated that it will take the approximately 200 respondents (Arrest Program grantees) approximately one hour to complete a semi-annual progress report. The semi-annual progress report is divided into sections that pertain to the different types of activities in which grantees may engage. An Arrest Program grantee will only be required to complete the sections of the form that pertain to its own specific activities.

(6) *An estimate of the total public burden (in hours) associated with the collection:* The total annual hour burden to complete the data collection forms is 400 hours, that is 200 grantees completing a form twice a year with an estimated completion time for the form being one hour.

If additional information is required contact: Jerri Murray, Department, Clearance Officer, United States Department of Justice, Justice Management Division, Policy and Planning Staff, Two Constitution Square, 145 N Street NE., Room 3E.405B, Washington, DC 20530.

Dated: April 15, 2015.

Jerri Murray,

Department Clearance Officer for PRA, U.S. Department of Justice.

[FR Doc. 2015–08988 Filed 4–17–15; 8:45 am]

BILLING CODE 4410–FX–P

DEPARTMENT OF JUSTICE

[OMB Number 1122–0026]

Agency Information Collection Activities; Proposed eCollection eComments Requested; Extension of an Approved Collection; Semi-Annual Progress Report for the Court Training and Improvements Program

AGENCY: Office on Violence Against Women, Department of Justice.

ACTION: 30-day notice.

SUMMARY: The Department of Justice (DOJ), Office on Violence Against Women, will be submitting the following information collection request to the Office of Management and Budget (OMB) for review and approval in accordance with the Paperwork Reduction Act of 1995. The proposed information collection was previously published in the **Federal Register** Volume 80, Number 27, Pages 7496–7497, on February 10, 2015, allowing for a 60 day comment period.

DATES: Comments are encouraged and will be accepted for an additional 30 days until May 20, 2015.

FOR FURTHER INFORMATION CONTACT: If you have comments especially on the estimated public burden or associated response time, suggestions, or need a copy of the proposed information collection instrument with instructions or additional information, please contact Cathy Poston, Attorney Advisor, Office on Violence Against Women, 145 N Street NE., Washington, DC 20530 (phone:202–514–5430). Written comments and/or suggestions can also be directed to the Office of Management and Budget, Office of Information and Regulatory Affairs, Attention Department of Justice Desk Officer, Washington, DC 20530 or sent to *OIRA_submissions@omb.eop.gov*.

SUPPLEMENTARY INFORMATION: Written comments and suggestions from the public and affected agencies concerning the proposed collection of information are encouraged. Your comments should address one or more of the following four points:

—Evaluate whether the proposed collection of information is necessary for the proper performance of the functions of the agency, including whether the information will have practical utility;

—Evaluate the accuracy of the agency's estimate of the burden of the proposed collection of information, including the validity of the methodology and assumptions used;

—Enhance the quality, utility, and clarity of the information to be collected; and

—Minimize the burden of the collection of information on those who are to respond, including through the use of appropriate automated, electronic, mechanical, or other technological collection techniques or other forms of information technology, *e.g.,* permitting electronic submission of responses.

Overview of This Information Collection

(1) *Type of Information Collection:* Extension of a currently approved collection.

(2) *Title of the Form/Collection:* Semi-Annual Progress Report for the Court Training and Improvements Program.

(3) *Agency form number:* Form Number: 1122–0026.

(4) *Affected public who will be asked or required to respond, as well as a brief abstract:*

Primary: The affected public includes the approximately 23 grantees of the Court Training and Improvements Program.

Abstract: The grant program creates a unique opportunity for Federal, State, Territorial, and Tribal courts or court-based programs to significantly improve court responses to sexual assault, domestic violence, dating violence, and stalking cases utilizing proven specialized court processes to ensure victim safety and offender accountability. The program challenges courts and court-based programs to work with their communities to develop specialized practices and educational resources that will result in significantly improved responses to sexual assault, domestic violence, dating violence and stalking cases, ensure offender accountability, and promote informed judicial decision making.

(5) *An estimate of the total number of respondents and the amount of time estimated for an average respondent to respond/reply:* It is estimated that it will take the approximately 23 respondents (Courts Program grantees) approximately one hour to complete a semi-annual progress report. The semi-annual progress report is divided into sections that pertain to the different types of activities in which grantees may engage. A Courts Program grantee will only be required to complete the sections of the form that pertain to its own specific activities.

(6) *An estimate of the total public burden (in hours) associated with the collection:* The total annual hour burden to complete the data collection forms is 46 hours, that is 23 grantees completing a form twice a year with an estimated completion time for the form being one hour.

If additional information is required contact: Jerri Murray, Department, Clearance Officer, United States Department of Justice, Justice Management Division, Policy and Planning Staff, Two Constitution Square, 145 N Street NE., Room 3E.405B, Washington, DC 20530.

Dated: April 15, 2015.

Jerri Murray,

Department Clearance Officer for PRA, U.S. Department of Justice.

[FR Doc. 2015–08989 Filed 4–17–15; 8:45 am]

BILLING CODE 4410–FX–P

DEPARTMENT OF JUSTICE

Notice of Lodging of Proposed Consent Decree Under the Clean Water Act and the Resource Conservation and Recovery Act

On April 10, 2015, the Department of Justice lodged a proposed consent decree with the United States District Court for the Northern District of Illinois in the lawsuit entitled *United States* v. *Beaver Oil Co., Inc.,* Civil Action No. 13 C 830.

The defendant in this case, Beaver Oil Company, Inc., operates a centralized waste treatment and used oil recycling facility in Hodgkins, Illinois. The lawsuit alleges that the defendant violated the Clean Water Act and the Resource Conservation and Recovery Act by failing to comply with regulations governing the handling of wastewater and hazardous wastes. The proposed settlement requires the defendant to perform injunctive relief and pay a civil penalty of $250,000.

The publication of this notice opens a period for public comment on the consent decree. Comments should be addressed to the Assistant Attorney General, Environment and Natural Resources Division, and should refer to *United States* v. *Beaver Oil Co., Inc.,* D.J. Ref. No. 90–5–1–1–09169. All comments must be submitted no later than thirty (30) days after the publication date of this notice. Comments may be submitted either by email or by mail:

To submit comments:	*Send them to:*
By e-mail	*pubcomment-ees.enrd@usdoj.gov.*
By mail	Assistant Attorney General, U.S. DOJ–ENRD, P.O. Box 7611, Washington, DC 20044–7611.

During the public comment period, the consent decree may be examined and downloaded at this Justice Department Web site: *http://www.usdoj.gov/enrd/Consent_Decrees.html.* We will provide a paper copy of the consent decree upon written request and payment of reproduction costs. Please mail your request and payment to: Consent Decree Library, U.S. DOJ–ENRD, P.O. Box 7611, Washington, DC 20044–7611.

Please enclose a check or money order for $20.50 (25 cents per page reproduction cost) payable to the United States Treasury.

Randall M. Stone,

Acting Assistant Section Chief, Environmental Enforcement Section, Environment and Natural Resources Division.

[FR Doc. 2015–09014 Filed 4–17–15; 8:45 am]

BILLING CODE 4410–15–P

DEPARTMENT OF JUSTICE

[OMB Number 1122–0027]

Agency Information Collection Activities; Proposed eCollection eComments Requested; Extension of an Approved Collection

AGENCY: Office on Violence Against Women, Department of Justice.

ACTION: 30-Day notice.

SUMMARY: The Department of Justice (DOJ), Office on Violence Against Women, will be submitting the following information collection request to the Office of Management and Budget (OMB) for review and approval in accordance with the Paperwork Reduction Act of 1995. The proposed information collection was previously published in the **Federal Register** Volume 80, page 7496, on February 10, 2015, allowing for a 60 day comment period.

DATES: Comments are encouraged and will be accepted for an additional 30 days until May 20, 2015.

FOR FURTHER INFORMATION CONTACT: If you have comments especially on the estimated public burden or associated response time, suggestions, or need a copy of the proposed information collection instrument with instructions or additional information, please contact Cathy Poston, Attorney Advisor, Office on Violence Against Women, 145 N Street NE., Washington, DC 20530 (phone: 202–514–5430). Written comments and/or suggestions can also be directed to the Office of Management and Budget, Office of Information and Regulatory Affairs, Attention Department of Justice Desk Officer, Washington, DC 20530 or sent to *OIRA_submissions@omb.eop.gov.*

SUPPLEMENTARY INFORMATION: Written comments and suggestions from the public and affected agencies concerning the proposed collection of information are encouraged. Your comments should address one or more of the following four points:

—Evaluate whether the proposed collection of information is necessary for the proper performance of the functions of the agency, including whether the information will have practical utility;

—Evaluate the accuracy of the agency's estimate of the burden of the proposed collection of information, including the validity of the methodology and assumptions used;

—Enhance the quality, utility, and clarity of the information to be collected; and

—Minimize the burden of the collection of information on those who are to respond, including through the use of appropriate automated, electronic, mechanical, or other technological collection techniques or other forms of information technology, *e.g.,* permitting electronic submission of responses.

Overview of This Information Collection

(1) *Type of Information Collection:* Extension of a currently approved collection.

(2) *Title of the Form/Collection:* Semi-Annual Progress Report for the Semi-Annual Progress Report for Grantees from the Engaging Men and Youth Program.

(3) *Agency form number:* Form Number: 1122–0027.

(4) *Affected public who will be asked or required to respond, as well as a brief abstract:*

Primary: The affected public includes the approximately 35 grantees of the Engaging Men and Youth Program.

Abstract: The grant program is designed to support projects fund projects that develop or enhance new or existing efforts to engage men and youth in preventing crimes of domestic violence, dating violence, sexual assault and stalking with the goal of developing mutually respectful, nonviolent relationships.

(5) *An estimate of the total number of respondents and the amount of time estimated for an average respondent to respond/reply:* It is estimated that it will take the approximately 35 respondents (Engaging Men Program grantees) approximately one hour to complete a semi-annual progress report. The semi-annual progress report is divided into sections that pertain to the different types of activities in which grantees may engage. An Engaging Men Program grantee will only be required to complete the sections of the form that pertain to its own specific activities.

(6) *An estimate of the total public burden (in hours) associated with the collection:* The total annual hour burden to complete the data collection forms is 70 hours, that is 35 grantees completing a form twice a year with an estimated completion time for the form being one hour.

If additional information is required contact: Jerri Murray, Department, Clearance Officer, United States Department of Justice, Justice Management Division, Policy and Planning Staff, Two Constitution Square, 145 N Street NE., Room 3E.405B, Washington, DC 20530.

Dated: April 15, 2015.

Jerri Murray,

Department Clearance Officer for PRA, U.S. Department of Justice.

[FR Doc. 2015–08990 Filed 4–17–15; 8:45 am]

BILLING CODE 4410–FX–P

DEPARTMENT OF JUSTICE

[OMB Number 1140–0022]

Agency Information Collection Activities: Proposed eCollection eComments Requested; Federal Explosives License/Permit (FEL) Renewal Application

AGENCY: Bureau of Alcohol, Tobacco, Firearms and Explosives, Department of Justice.

ACTION: 30-day notice.

SUMMARY: The Department of Justice (DOJ), Bureau of Alcohol, Tobacco, Firearms and Explosives (ATF) will submit the following information collection request to the Office of Management and Budget (OMB) for review and approval in accordance with the Paperwork Reduction Act of 1995. The proposed information collection is published to obtain comments from the public and affected agencies. This proposed information collection was previously published in the **Federal Register** Volume 80, Number 29, page 7880 on February 12, 2015, allowing for a 60 day comment period.

DATES: The purpose of this notice is to allow for an additional 30 days for public comment until May 20, 2015.

FOR FURTHER INFORMATION CONTACT: If you have comments, especially on the estimated public burden or associated response time, suggestions, or need a copy of the proposed information collection instrument with instructions or additional information, please contact Christopher Reeves at *Christopher.R.Reeves@usdoj.gov.* Written comments and/or suggestions can also be directed to the Office of Management and Budget, Office of Information and Regulatory Affairs, Attention Department of Justice Desk Officer, Washington DC 20503 or send email to *OIRA_submission@omb.eop.gov.*

SUPPLEMENTARY INFORMATION: Written comments and suggestions from the public and affected agencies concerning the proposed collection of information are encouraged. Your comments should address one or more of the following four points:

- Evaluate whether the proposed collection of information is necessary for the proper performance of the functions of the agency, including whether the information will have practical utility;
- Evaluate the accuracy of the agency's estimate of the burden of the proposed collection of information, including the validity of the methodology and assumptions used;
- Enhance the quality, utility, and clarity of the information to be collected; and
- Minimize the burden of the collection of information on those who are to respond, including through the use of appropriate automated, electronic, mechanical, or other technological collection techniques or other forms of information technology, *e.g.,* permitting electronic submission of responses.

Overview of this Information Collection 1140–0022:

(1) Type of Information Collection: Revision of an existing collection.

(2) Title of the Form/Collection: Federal Explosives License/Permit (FEL) Renewal Application.

(3) Agency form number, if any, and the applicable component of the Department sponsoring the collection:

Form number: ATF Form 5400.14/5400.15 Part III.

Component: Bureau of Alcohol, Tobacco, Firearms and Explosives, U.S. Department of Justice.

(4) Affected public who will be asked or required to respond, as well as a brief abstract:

Primary: Business or other for-profit.

Other: Federal Government, State, Local, or Tribal Government.

Abstract: The form is used for the renewal of an explosive license or permit. The renewal application is used by ATF to determine that the applicant remains eligible to retain the license or permit. The change to the form is to add instructions that ATF Form 5400.28 must be completed for all EP's that are active on the Federal Explosives License (FEL), both current and new EP's.

(5) An estimate of the total number of respondents and the amount of time estimated for an average respondent to respond: An estimated 2,500 respondents will take 25 minutes to complete the form.

(6) An estimate of the total public burden (in hours) associated with the collection: The estimated annual public burden associated with this collection is 825 hours.

If additional information is required contact: Jerri Murray, Department Clearance Officer, United States Department of Justice, Justice Management Division, Policy and Planning Staff, Two Constitution Square, 145 N Street NE., Room 3E–405B, Washington, DC 20530.

Dated: April 14, 2015.

Jerri Murray,

Department Clearance Officer for PRA, U.S. Department of Justice.

[FR Doc. 2015–08987 Filed 4–17–15; 8:45 am]

BILLING CODE 4410–FY–P

NATIONAL AERONAUTICS AND SPACE ADMINISTRATION

[Notice: (15–029)]

Aerospace Safety Advisory Panel; Meeting

AGENCY: National Aeronautics and Space Administration (NASA).

ACTION: Notice of meeting.

SUMMARY: In accordance with the Federal Advisory Committee Act, Public Law 92–463, as amended, the National Aeronautics and Space Administration announces a forthcoming meeting of the Aerospace Safety Advisory Panel.

DATES: Wednesday, May 13, 2015, 4:00 p.m. to 5:30 p.m., Local Time.

ADDRESSES: NASA Headquarters, Room 9H40, 300 E Street SW., Washington, DC 20546.

FOR FURTHER INFORMATION CONTACT: Ms. Marian Norris, Aerospace Safety Advisory Panel Administrative Officer, National Aeronautics and Space Administration, Washington, DC 20546, (202) 358–4452 or *mnorris@nasa.gov.*

SUPPLEMENTARY INFORMATION: The Aerospace Safety Advisory Panel (ASAP) will hold its Second Quarterly Meeting for 2015. This discussion is pursuant to carrying out its statutory duties for which the Panel reviews, identifies, evaluates, and advises on those program activities, systems, procedures, and management activities that can contribute to program risk. Priority is given to those programs that involve the safety of human flight. The agenda will include:

—Exploration Systems Development Program Update

—Commercial Crew Program Update

—International Space Station Program Update

The meeting will be open to the public up to the seating capacity of the room. Seating will be on a first-come basis. This meeting is also available telephonically. Any interested person may call the USA toll free conference call number (800) 857–7040; pass code 52984. Attendees will be requested to sign a register and to comply with NASA security requirements, including the presentation of a valid picture ID to Security before access to NASA Headquarters. Due to the Real ID Act, Public Law 109–13, any attendees with driver's licenses issued from non-compliant states/territories must present a second form of ID (Federal employee badge; passport; active military identification card; enhanced driver's license; U.S. Coast Guard Merchant Mariner card; Native American tribal document; school identification accompanied by an item from LIST C (documents that establish employment authorization) from the ''List of the Acceptable Documents'' on Form I–9). Non-compliant states/territories are: American Samoa, Arizona, Idaho, Louisiana, Maine, Minnesota, New Hampshire, and New York. Foreign nationals attending this meeting will be required to provide a copy of their passport and visa in addition to providing the following information no less than 10 working days prior to the meeting: Full name; gender; date/place of birth; citizenship; visa information (number, type, expiration date); passport information (number, country, expiration date); employer/affiliation information (name of institution, address, country, telephone); title/position of attendee; and home address to Marian Norris via email at *mnorris@nasa.gov* or by fax at (202) 358–3099. U.S. citizens and Permanent Residents (green card holders) are requested to submit their name and affiliation 3 working days prior to the meeting to Marian Norris. It is imperative that the meeting be held on this date to accommodate the scheduling priorities of the key participants.

Patricia D. Rausch,

Advisory Committee Management Officer, National Aeronautics and Space Administration.

[FR Doc. 2015–08913 Filed 4–17–15; 8:45 am]

BILLING CODE 7510–13–P

NATIONAL SCIENCE FOUNDATION

Committee Management; Renewal

The NSF management officials having responsibility for the Advisory Committee for International Science and Engineering, #25104 has determined that renewing this committee for another two years is necessary and in the public interest in connection with the performance of duties imposed upon the Director, National Science Foundation (NSF), by 42 U.S.C. 1861 *et seq.* This determination follows consultation with the Committee Management Secretariat, General Services Administration.

Effective date for renewal is April 15, 2015. For more information, please contact Crystal Robinson, NSF, at (703) 292–8687.

Dated: April 15, 2015.

Suzanne Plimpton,

Acting, Committee Management Officer.

[FR Doc. 2015–08967 Filed 4–17–15; 8:45 am]

BILLING CODE 7555–01–P

NATIONAL SCIENCE FOUNDATION

Advisory Committee for Education and Human Resources; Notice of Meeting

In accordance with the Federal Advisory Committee Act (Pub. L. 92–463, as amended), the National Science Foundation announces the following meeting:

Name: Advisory Committee for Education and Human Resources (#1119).

Date/Time: May 19, 2015; 8 a.m.–6 p.m., May 20, 2015; 8 a.m.–2:30 p.m.

Place: National Science Foundation, 4201 Wilson Boulevard, Room 375, Arlington, VA 22230.

Operated assisted teleconference is available for this meeting. Call 800–857–3133 with password EHR AC MEET and you will be connected to the audio portion of the meeting.

To attend the meeting in person, all visitors must contact the Directorate for Education and Human Resources (*ehr_ac@nsf.gov*) at least 24 hours prior to the teleconference to arrange for a visitor's badge. All visitors must report to the NSF visitor desk located in the lobby at the 9th and N. Stuart Streets entrance on the day of the teleconference to receive a visitor's badge.

Meeting materials and minutes will also be available on the EHR Advisory Committee Web site at *http://www.nsf.gov/ehr/advisory.jsp.*

Type of Meeting: Open, Teleconference.

Contact Person: Keaven M. Stevenson, National Science Foundation, 4201 Wilson Boulevard, Room 805, Arlington, VA 22230, (703) 292–8600, *kstevens@nsf.gov.*

Purpose of Meeting: To provide advice with respect to the Foundation's science, technology, engineering, and mathematics (STEM) education and human resources programming.

Agenda

Tuesday, May 19, 2015, 8 a.m.–6 p.m.

- Remarks by the Committee Chair and NSF Assistant Director for Education and Human Resources (EHR)
- Feedback on the EHR Core Research Program White Paper
- Panel Discussion: Evolving Successful STEM Education Indicators
- Panel Discussion: Developing New Measures for 21st Century Skills
- Panel Discussion: New Directions for Broadening Participation with INCLUDES (Inclusion across the Nation of Communities of Learners that have been Underrepresented for Diversity in Engineering and Science)
- Discussion with Dr. Richard O. Buckius, NSF Chief Operating Officer
- Synthesis of the Day

Wednesday, May 20, 2015 8 a.m.–2:30 p.m.

- Panel Discussion on Putting Improvement Science into STEM
- Plenary Panel: The Future of Graduate Education
- Adjournment

Dated: April 15, 2015.

Suzanne Plimpton,

Acting, Committee Management Officer.

[FR Doc. 2015–08966 Filed 4–17–15; 8:45 am]

BILLING CODE 7555–01–P

NUCLEAR REGULATORY COMMISSION

[Docket Nos. 50–387 and 50–388; License Nos. NPF–14 and NPF–22; NRC–2014–0211]

In the Matter of PPL Susquehanna, LLC; Susquehanna Steam Electric Station, Units 1 and 2

AGENCY: Nuclear Regulatory Commission.

ACTION: Indirect transfer of license; order; issuance.

SUMMARY: The U.S. Nuclear Regulatory Commission (NRC) is issuing an order to PPL Susquehanna, LLC (PPL Susquehanna), approving the indirect transfer of PPL Susquehanna's interests in Renewed Facility Operating License Nos. NPF–14 and NPF–22, as well as the general license for the independent spent fuel storage installation, for Susquehanna Steam Electric Station, Units 1 and 2. As a result of the transaction, PPL Susquehanna will become indirectly controlled by two new entities, and will be renamed Susquehanna Nuclear, LLC. Conforming license amendments will replace references to PPL Corporation in the license with references to Talen Energy to reflect the transfer of ownership, and will replace references to PPL

Susquehanna, LLC with references to Susquehanna Nuclear, LLC to reflect the new name. No physical changes to the facilities or operational changes were proposed in the application, and Susquehanna Nuclear, LLC will be owner and operator of the facility. This Order is effective upon issuance.

DATES: The Order was issued on April 10, 2015, and is effective for one year.

ADDRESSES: Please refer to Docket ID NRC–2014–0211 when contacting the NRC about the availability of information regarding this document. You may obtain publicly-available information related to this document using any of the following methods:

- *Federal Rulemaking Web site:* Go to *http://www.regulations.gov* and search for Docket ID NRC–2014–0211. Address questions about NRC dockets to Carol Gallagher; telephone: 301–415–3463; email: *Carol.Gallagher@nrc.gov.* For technical questions, contact the individual listed in the **FOR FURTHER INFORMATION CONTACT** section of this document.

- *NRC's Agencywide Documents Access and Management System (ADAMS):* You may obtain publicly available documents online in the ADAMS Public Documents collection at *http://www.nrc.gov/reading-rm/adams.html.* To begin the search, select ''*ADAMS Public Documents''* and then select ''*Begin Web-based ADAMS Search.''* For problems with ADAMS, please contact the NRC's Public Document Room (PDR) reference staff at 1–800–397–4209, 301–415–4737, or by email to *pdr.resource@nrc.gov.* The ADAMS accession number for each document referenced (if it available in ADAMS) is provided the first time that a document is referenced.

- *NRC's PDR:* You may examine and purchase copies of public documents at the NRC's PDR, Room O1–F21, One White Flint North, 11555 Rockville Pike, Rockville, Maryland 20852.

FOR FURTHER INFORMATION CONTACT: Jeffrey A. Whited, Office of Nuclear Reactor Regulation, U.S. Nuclear Regulatory Commission, Washington, DC 20555–0001; telephone: 301–415–4090; email: *Jeffrey.Whited@nrc.gov.*

SUPPLEMENTARY INFORMATION:

The text of the Order is attached.

Dated at Rockville, Maryland this 13th day of April 2015.

For the Nuclear Regulatory Commission.

Jeffrey A. Whited,

Project Manager, Plant Licensing Branch I–2, Division of Operating Reactor Licensing, Office of Nuclear Reactor Regulation.

Attachment—Order Approving Transfer of Licenses and Conforming Amendments

United States of America Nuclear Regulatory Commission

In the Matter of PPL Susquehanna, LLC; Susquehanna Steam Electric Station, Units 1 and 2, Docket Nos. 50–387 and 50–388, Renewed License Nos. NPF–14 and NPF–22, Order Approving Transfer of Licenses and Conforming Amendments

I.

PPL Susquehanna, LLC (PPL Susquehanna, or the applicant) and Allegheny Electric Cooperative, Inc. (Allegheny) are holders of Renewed Facility Operating License Nos. NPF–14, NPF–22, and the general license of the Independent Spent Fuel Storage Installation (ISFSI), which authorizes the possession, use, and operation of the Susquehanna Steam Electric Station (SSES), Units 1 and 2, and the ISFSI. PPL Susquehanna (currently owner of 90 percent of SSES) is authorized to possess, use, and operate SSES, Units 1 and 2, as well as the general license for the SSES ISFSI. Allegheny (currently owner of 10 percent of SSES) is authorized to possess SSES, Units 1 and 2, as well as the general license for the SSES ISFSI. SSES is located in Luzerne County, Pennsylvania.

II.

By application dated July 11, 2014, as supplemented by letters dated October 24, 2014, November 6, 2014, November 25, 2014, December 10, 2014, January 5, 2015, January 13, 2015, March 9, 2015, March 13, 2015, March 18, 2015, and March 31, 2015 (collectively, the application), PPL Susquehanna requested on behalf of itself, that the U.S. Nuclear Regulatory Commission (NRC) approve the indirect transfer of control of PPL Susquehanna's interests in Renewed Facility Operating License Nos. NPF–14 and NPF–22, as well as the general license for the ISFSI. PPL Susquehanna is licensed as the sole operator and has a 90 percent undivided ownership interest in SSES. The proposed indirect transfer of licenses does not involve Allegheny, the other (10-percent) owner and a nonoperating licensee for SSES. The indirect transfer of control will result from a series of transactions, in which PPL Corporation, PPL Susquehanna's ultimate parent, will spin off PPL Energy Supply, LLC (Energy Supply), which holds domestic competitive generation and ancillary assets including PPL Susquehanna. The transaction will involve the creation of and changes to intermediate holding companies, with Energy Supply eventually becoming a direct wholly owned subsidiary of a new intermediate parent named Talen Energy Holdings, Inc. (Talen Holdings), which in turn will be a direct wholly owned subsidiary of a new, publicly owned ultimate parent, named Talen Energy Corporation (Talen Energy). As a result of the transaction, PPL Susquehanna will become indirectly controlled by two new entities (Talen Energy and Talen Holdings). Immediately following the transaction, PPL Susquehanna will be renamed Susquehanna Nuclear, LLC (Susquehanna Nuclear).

The applicant also requested approval of conforming license amendments that would replace references to PPL Corporation in the license with references to Talen Energy to reflect the indirect transfer of ownership, and would replace references to PPL Susquehanna, LLC with references to Susquehanna Nuclear, LLC to reflect the new name. No physical changes to the facilities or operational changes were proposed in the application. After completion of the proposed transfer, Susquehanna Nuclear will be owner and operator of the facility.

Approval of the indirect transfer of the renewed facility operating licenses, and conforming license amendments was requested by the applicant pursuant to Sections 50.80 and 50.90, of Title 10 of the *Code of Federal Regulations* (10 CFR). A notice entitled, ''Susquehanna Steam Electric Station, Units 1 and 2; Consideration of Approval of Transfer of Licenses and Conforming Amendments,'' was published in the **Federal Register** on October 6, 2014 (79 FR 60192). Three public comments were received regarding the proposed License Transfer. The NRC staff has addressed these comments in the safety evaluation dated April 10, 2015, supporting this Order. A petition for leave to intervene pursuant to 10 CFR 2.309 was received on October 24, 2014, from Mr. Douglas B. Ritter of Berwick, Pennsylvania. The petition is under consideration by the Commission.

Under 10 CFR 50.80, no license, or any right thereunder, shall be transferred, directly or indirectly, through transfer of control of the license, unless the Commission shall give its consent in writing. Upon review of the information in the licensee's application and other information before the Commission, and relying

upon the representations and agreements contained in the application, the NRC has determined that the proposed indirect license transfer of control of the subject licenses held by the licensee to the extent such will result from the corporate spin-off whereby Talen Energy will become the ultimate parent company of Susquehanna Nuclear to the extent affected by the proposed transaction, as described in the application, is otherwise consistent with applicable provisions of law, regulations, and orders issued by the NRC, pursuant thereto, subject to the conditions set forth below. The NRC staff has also found that Susquehanna Nuclear remains qualified to hold the license. The NRC staff has further found that the application for the proposed license amendment complies with the standards and requirements of the Atomic Energy Act of 1954, as amended (the Act), and the Commission's rules and regulations set forth in 10 CFR Chapter I; the facilities will operate in conformity with the applications, the provisions of the Act, and the rules and regulations of the Commission; there is reasonable assurance that the activities authorized by the proposed license amendment can be conducted without endangering the health and safety of the public and that such activities will be conducted in compliance with the Commission's regulations; the issuance of the proposed license amendment will not be inimical to the common defense and security or to the health and safety of the public; and the issuance of the proposed amendment will be in accordance with 10 CFR part 51 of the Commission's regulations and all applicable requirements have been satisfied.

The findings set forth above are supported by NRC safety evaluation dated April 10, 2015.

III.

Accordingly, pursuant to Sections 161b, 161i, 161o and 184 of the Act, 42 U.S.C. Sections 2201(b), 2201(i), 2201(o) and 2234; and 10 CFR 50.80, IT IS HEREBY ORDERED that the indirect transfer of the licenses, as described herein, to Talen Energy is approved, subject to the following conditions:

1. Susquehanna Nuclear, LLC shall not take any action that would cause Talen Energy Corporation or any other direct or indirect parent of Susquehanna Nuclear, LLC or other entity, to void, cancel, or diminish the commitment to fund an extended plant shutdown, as represented in the application for approval of the indirect transfer of the license for Susquehanna SES, Unit [1 or 2, as applicable].

2. The Support Agreement containing the commitment to fund an extended shutdown by Talen Energy Corporation, as represented in the application, shall be executed on or before the transfer date and shall be submitted to the NRC no later than five (5) days after the transfer is consummated.

3. The decommissioning trust agreement for Susquehanna SES, Units 1 and 2, is subject to the following:

(a) The trust agreement must be in a form acceptable to the NRC

(b) With respect to the decommissioning trust funds, investments in securities or other obligations of Talen Energy Corporation or its affiliates, successors, or assigns shall be prohibited. Except for investments tied to market indexes or other non-nuclear-sector mutual funds, investments in any entity owning one or more nuclear power plants are prohibited.

(c) The decommissioning trust agreement for Susquehanna SES, Units 1 and 2, must provide that no disbursements or payments from the trust shall be made by the trustee unless the trustee has first given the NRC 30-day prior written notice of payment. The decommissioning trust agreement shall further contain a provision that no disbursements or payments from the trust shall be made if the trustee received prior written notice of objection from the Director, Office of Nuclear Reactor Regulation.

(d) The decommissioning trust agreements must provide that the agreements cannot be amended in any material respect without 30-days prior written notification to the Director, Office of Nuclear Reactor Regulation.

(e) The appropriate section of the decommissioning trust agreement shall state that the trustee, investment advisor, or anyone else directing the investments made in the trust shall adhere to a ''prudent investor'' standard, as specified in 18 CFR 35.32(a)(3) of the Federal Energy Regulatory Commission's regulations.

It is further ordered that, consistent with 10 CFR 2.1315(b), the license amendments that makes changes, as indicated in Enclosures 2 and 3 to the cover letter forwarding this Order, to conform the licenses to reflect the subject indirect license transfer are approved. The license amendments shall be issued and made effective at the time the proposed indirect transfers are completed.

It is further ordered that after receipt of all required regulatory approvals of the proposed indirect transfer action Susquehanna Nuclear shall inform the Director of the Office of Nuclear Reactor Regulation in writing of such receipt, and the date of closing of the transfer no later than 2 business days prior to the date of the closing of the indirect transfer. Should the indirect transfer not be completed within one year of this Order's date of issue, this Order shall become null and void, provided, however, that upon written application and good cause shown, such date may be extended by order.

This Order is effective upon issuance.

For further details with respect to this Order, see the initial application dated July 11, 2014, (Agencywide Documents Access and Management System (ADAMS) Accession No. ML14195A110), as supplemented by additional letters dated October 24, 2014 (ADAMS Accession No. ML14311A672); November 6, 2014 (ADAMS Accession No. ML14311A292); November 25, 2014 (ADAMS Accession No. ML15002A215); December 10, 2014 (ADAMS Accession No. ML14344A207); January 5, 2015 (ADAMS Accession No. ML15007A408); January 13, 2015 (ADAMS Accession No. ML15016A050); March 9, 2015 (ADAMS Accession No. ML15076A113); March 13, 2015 (ADAMS Accession No. ML15093A180); March 18, 2015 (ADAMS Accession No. ML15091A320); and March 31, 2015 (ADAMS Accession No. ML15090A395), and the non-proprietary safety evaluation dated April 10, 2015, which are available for public inspection at the Commission's Public Document Room (PDR), located at One White Flint North, 11555 Rockville Pike, Room O–1 F21 (First Floor), Rockville, Maryland and accessible electronically though the ADAMS Public Electronic Reading Room on the Internet at the NRC Web site, *http://www.nrc.gov/reading-rm/adams.html.* Persons who do not have access to ADAMS or who encounter problems in accessing the documents located in ADAMS should contact the NRC PDR reference staff by telephone at 1–800–397–4209, 301–415–4737, or by email at *pdr.resource@nrc.gov.*

Dated at Rockville, Maryland this 10th day of April 2015.

For The Nuclear Regulatory Commission.

A. Louise Lund,

Acting Director, Division of Operating Reactor Licensing, Office of Nuclear Reactor Regulation.

[FR Doc. 2015–09029 Filed 4–17–15; 8:45 am]

BILLING CODE 7590–01–P

NUCLEAR REGULATORY COMMISSION

[NRC–2015–0098]

Seismic Stability Analysis for Spent Fuel Dry Cask Stack-Up Configuration

AGENCY: Nuclear Regulatory Commission.

ACTION: Draft regulatory issue summary; request for comment.

SUMMARY: The U.S. Nuclear Regulatory Commission (NRC) is seeking public comment on a draft regulatory issue summary (RIS), RIS 2015–XX ''Seismic Stability Analysis Methodologies for Spent Fuel Dry Cask Loading Stack-up Configuration.'' This RIS clarifies the NRC staff's position on acceptable seismic stability analysis methodologies to determine if a spent fuel dry cask loading stack-up configuration needs to be laterally supported

DATES: Submit comments by June 4, 2015. Comments received after this date will be considered if it is practical to do so, but the Commission is able to assure consideration only for comments received before this date.

ADDRESSES: You may submit comments by any of the following methods (unless this document describes a different method for submitting comments on a specific subject):

- *Federal Rulemaking Web site:* Go to *http://www.regulations.gov* and search for Docket ID NRC–2015–0098. Address questions about NRC dockets to Carol Gallagher; telephone: 301–415–3463; email: *Carol.Gallagher@nrc.gov.* For technical questions, contact the individual listed in the **FOR FURTHER INFORMATION CONTACT** section of this document.
- *Mail comments to:* Cindy Bladey, Office of Administration, Mail Stop: OWFN–12–H08, U.S. Nuclear Regulatory Commission, Washington, DC 20555–0001.

For additional direction on obtaining information and submitting comments, see ''Obtaining Information and Submitting Comments'' in the **SUPPLEMENTARY INFORMATION** section of this document.

FOR FURTHER INFORMATION CONTACT: Todd Keene, Office of Nuclear Reactor Regulation; telephone: 301–415–1994, email: *Todd.Keene@nrc.gov*; U.S. Nuclear Regulatory Commission, Washington DC 20555–0001.

SUPPLEMENTARY INFORMATION:

I. Obtaining Information and Submitting Comments

A. Obtaining Information

Please refer to Docket ID NRC–2015–0098 when contacting the NRC about the availability of information for this action. You may obtain publicly-available information related to this action by any of the following methods:

- *Federal Rulemaking Web site:* Go to *http://www.regulations.gov* and search for Docket ID NRC–2015–0098.
- *NRC's Agencywide Documents Access and Management System (ADAMS):* You may obtain publicly-available documents online in the ADAMS Public Documents collection at *http://www.nrc.gov/reading-rm/adams.html.* To begin the search, select ''*ADAMS Public Documents*'' and then select ''*Begin Web-based ADAMS Search.*'' For problems with ADAMS, please contact the NRC's Public Document Room (PDR) reference staff at 1–800–397–4209, 301–415–4737, or by email to *pdr.resource@nrc.gov.* The draft RIS, ''Seismic Stability Analysis Methodologies for Spent Fuel Dry Cask Loading Stack-up Configuration,'' is available in ADAMS under Accession No. ML13353A710.
- *NRC's PDR:* You may examine and purchase copies of public documents at the NRC's PDR, Room O1–F21, One White Flint North, 11555 Rockville Pike, Rockville, Maryland 20852.

B. Submitting Comments.

Please include Docket ID NRC–2015–0098 in your comment submission.

The NRC cautions you not to include identifying or contact information in comment submisssions that you do not want to be publicly disclosed in your comment submission. The NRC will post all comment submissions at *http://www.regulations.gov* as well as enter the comment submissions into ADAMS, and the NRC does not routinely edit comment submissions to remove identifying or contact information.

If you are requesting or aggregating comments from other persons for submission to the NRC, then you should inform those persons not to include identifying or contact information that they do not want to be publicly disclosed in their comment submission. Your request should state that the NRC does not routinely edit comment submissions to remove such information before making the comment submissions available to the public or entering the comment submissions into ADAMS.

II. Background

The NRC is requesting public comments on the draft RIS. The NRC issues RISs to communicate with stakeholders on a broad range of regulatory matters. This may include communicating and restating staff technical positions on regulatory matters.

The NRC staff has developed draft RIS 2015–XX, ''Seismic Stability Analysis Methodologies for Spent Fuel Dry Cask Loading Stack-up Configuration,'' to share information regarding acceptable seismic stability analysis methodologies to determine if a spent fuel dry cask loading stack-up configuration needs to be laterally supported. The draft RIS is available electronically under ADAMS Accession No. ML13353A710.

Dated at Rockville, Maryland, this 14th day of April, 2015.

For the Nuclear Regulatory Commission.

Sheldon Stuchell,

Chief, Generic Communications Branch, Division of Policy and Rulemaking, Office of Nuclear Reactor Regulation.

[FR Doc. 2015–08958 Filed 4–17–15; 8:45 am]

BILLING CODE 7590–01–P

NUCLEAR REGULATORY COMMISSION

[NRC–2015–0097]

Managing the Safety/Security Interface

AGENCY: Nuclear Regulatory Commission.

ACTION: Regulatory guide; issuance.

SUMMARY: The U.S. Nuclear Regulatory Commission (NRC) is issuing revision 1 to regulatory guide (RG), RG 5.74, ''Managing the Safety/Security Interface,'' in which there are minor corrections with no substantive changes in the NRC staff's regulatory positions. This RG describes a method that the staff considers acceptable for licensees to assess and manage changes to safety and security activities so as to prevent or mitigate potential adverse effects that could negatively impact either plant safety or security.

ADDRESSES: Please refer to Docket ID NRC–2015–0097 when contacting the NRC about the availability of information regarding this document. You may obtain publicly-available information related to this document using any of the following methods:

- Federal Rulemaking Web site: Go to *http://www.regulations.gov* and search for Docket ID NRC–2015–0097. Address questions about NRC dockets to Carol Gallagher; telephone: 301–415–3463; email: *Carol.Gallagher@ nrc.gov.* For

technical questions, contact the individual(s) listed in the **FOR FURTHER INFORMATION CONTACT** section of this document.

• NRC's Agencywide Documents Access and Management System (ADAMS): You may obtain publicly-available documents online in the ADAMS Public Documents collection at *http://www.nrc.gov/reading-rm/adams.html.* To begin the search, select ''ADAMS Public Documents'' and then select ''*Begin Web-based ADAMS Search.''* For problems with ADAMS, please contact the NRC's Public Document Room (PDR) reference staff at 1–800–397–4209, 301–415–4737, or by email to *pdr.resource@nrc.gov.* The ADAMS accession number for each document referenced (if it available in ADAMS) is provided the first time that a document is referenced. Revision 1 of RG 5.74 is available in ADAMS under Accession No. ML14323A549.

• NRC's PDR: You may examine and purchase copies of public documents at the NRC's Public Document Room O1–F21, One White Flint North, 11555 Rockville Pike, Rockville, Maryland 20852.

Regulatory guides are not copyrighted, and NRC approval is not required to reproduce them.

FOR FURTHER INFORMATION CONTACT: Wesley Held, Office of Nuclear Security and Incident Response, telephone: 301–415–1583, email: *Wesley.Held@nrc.gov;* and Stephen Burton, Office of Nuclear Regulatory Research, telephone: 301–415–7000, email: *Stephen.Burton@nrc.gov.* Both are staff of the U.S. Nuclear Regulatory Commission, Washington, DC 20555–0001.

SUPPLEMENTARY INFORMATION:

I. Introduction

The NRC is issuing a revision to an existing guide in the NRC's ''Regulatory Guide'' series. Regulatory guides were developed to describe and make available to the public information and methods that are acceptable to the NRC staff for implementing specific parts of the agency's regulations, techniques that the staff uses in evaluating specific problems or postulated accidents, and data that the staff needs in its review of applications for permits and licenses. The NRC typically seeks public comment on a draft version of a RG by announcing its availability for comment in the **Federal Register**. However, as explained on page 7 of NRC's Management Directive 6.6 ''Regulatory Guides,'' (ADAMS Accession No. ML110330475) the NRC may directly issue a final RG without a draft version or public comment-period if the changes to the RG are non-substantive.

The NRC is issuing Revision 1 of RG 5.74 directly as a final RG because the changes between Revision 0 and Revision 1 are non-substantive. Revision 1 of RG 5.74 incorporated editorial changes and updated the guide to the current format for RGs and is administrative in nature. These changes were intended to improve clarity and did not substantially alter the staff's regulatory guidance. These changes included additional questions to assist the user in the screening of planned and emergent activities or changes, and clarification to the requirement that the safety-security interface must be maintained at all times.

II. Backfitting and Issue Finality

Issuance of this final RG does not constitute backfitting as defined in section 50.109 of title 10 of the *Code of Federal Regulations* (10 CFR), (the Backfit Rule), and is not otherwise inconsistent with the issue finality provisions in 10 CFR part 52. The changes in Revision 1 of RG 5.74 are limited to editorial changes to improve clarity and the correction of a title. These changes do not fall within the kinds of agency actions that constitute backfitting or are subject to limitations in the issue finality provisions of part 52. Accordingly, the NRC did not address the Backfit Rule or issue finality provisions of part 52.

III. Congressional Review Act

This RG is a rule as defined in the Congressional Review Act (5 U.S.C. 801–808). However, the Office of Management and Budget has not found it to be a major rule as defined in the Congressional Review Act.

IV. Submitting Suggestions for Improvement of Regulatory Guides

Revision 1 of RG 5.74 is being issued without public comment. However, you may at any time submit suggestions to the NRC for improvement of existing RGs or for the development of new RGs to address new issues. Suggestions can be submitted by the form available online at *http://www.nrc.gov/reading-rm/doc-collections/reg-guides/contactus.html.* Suggestions will be considered in future updates and enhancements of the RG.

Dated at Rockville, Maryland, this 14th day of April, 2015.

For the Nuclear Regulatory Commission.

Harriet Karagiannis,

Acting Chief, Regulatory Guidance and Generic Issues Branch, Division of Engineering, Office of Nuclear Regulatory Research.

[FR Doc. 2015–08965 Filed 4–17–15; 8:45 am]

BILLING CODE 7590–01–P

NUCLEAR REGULATORY COMMISSION

[NRC–2015–0001]

Sunshine Act Meeting Notice

DATE: April 20, 27, May 4, 11, 18, 25, 2015.

PLACE: Commissioners' Conference Room, 11555 Rockville Pike, Rockville, Maryland.

STATUS: Public and Closed.

Week of April 20, 2015

Thursday, April 23, 2015

9:25 a.m. Affirmation Session (Public Meeting) (Tentative)

Shaw AREVA MOX Services, LLC (Mixed Oxide Fuel Fabrication Facility Possession and Use License)—Denial of Intervenors' Petition for Review of LBP–14–1 (Tentative).

Week of April 27, 2015—Tentative

Thursday, April 30, 2105

9:00 a.m. Briefing on the Status of Lessons Learned from the Fukushima Dai-ichi Accident (Public Meeting) (Contact: Jack Davis, 301—415–2239)

This meeting will be webcast live at the Web address—*http://www.nrc.gov/.*

Week of May 4, 2015—Tentative

There are no meetings scheduled for the week of May 4, 2015.

Week of May 11, 2015—Tentative

There are no meetings scheduled for the week of May 11, 2015.

Week of May 18, 2015—Tentative

Tuesday, May 19, 2015

9:00 a.m. Briefing on Cumulative Effects of Regulation and Risk Prioritization Initiatives (Public Meeting)

(Contact: Steve Ruffin, 301- 415–1985)

This meeting will be webcast live at the Web address—*http://www.nrc.gov/.*

Thursday, May 21, 2015

9:00 a.m. Briefing on the Results of the Agency Action Review Meeting (Public Meeting); (Contact: Nathan Sanfilippo, 301–415–8744)

This meeting will be webcast live at the Web address—*http://www.nrc.gov/.*

Week of May 25, 2015—Tentative

There are no meetings scheduled for the week of May 25, 2015.

* * * * *

The schedule for Commission meetings is subject to change on short notice. For more information or to verify

the status of meetings, contact Glenn Ellmers at 301–415–0442 or via email at *Glenn.Ellmers@nrc.gov.*

* * * * *

The NRC Commission Meeting Schedule can be found on the Internet at: http://www.nrc.gov/public-involve/public-meetings/schedule.html.

* * * * *

The NRC provides reasonable accommodation to individuals with disabilities where appropriate. If you need a reasonable accommodation to participate in these public meetings, or need this meeting notice or the transcript or other information from the public meetings in another format (*e.g.* braille, large print), please notify Kimberly Meyer, NRC Disability Program Manager, at 301–287–0727, by videophone at 240–428–3217, or by email at *Kimberly.Meyer-Chambers@nrc.gov.* Determinations on requests for reasonable accommodation will be made on a case-by-case basis.

* * * * *

Members of the public may request to receive this information electronically. If you would like to be added to the distribution, please contact the Nuclear Regulatory Commission, Office of the Secretary, Washington, DC 20555 (301–415–1969), or email *Brenda.Akstulewicz@nrc.gov* or *Patricia.Jimenez@nrc.gov.*

Dated: April 16, 2015.

Glenn Ellmers,

Policy Coordinator, Office of the Secretary.

[FR Doc. 2015–09243 Filed 4–16–15; 4:15 pm]

BILLING CODE 7590–01–P

NUCLEAR REGULATORY COMMISSION

[Docket No. 72–09; NRC–2015–0096]

Department of Energy; Fort St. Vrain Independent Spent Fuel Storage Installation

AGENCY: Nuclear Regulatory Commission.

ACTION: License amendment application; opportunity to request a hearing and to petition for leave to intervene.

SUMMARY: The U.S. Nuclear Regulatory Commission (NRC) has docketed a license amendment application from the Department of Energy (DOE). The DOE is requesting a revision to the Technical Specifications for the Fort St. Vrain Independent Spent Fuel Storage Installation located in Platteville, Colorado.

DATES: A request for a hearing must be filed by June 19, 2015. Any potential party as defined in section 2.4 of title 10 of the *Code of Federal Regulations* (10 CFR), who believes access to Sensitive Unclassified Non-Safeguards Information is necessary to respond to this notice must request document access by April 30, 2015.

ADDRESSES: Please refer to Docket ID NRC–2015–0096 when contacting the NRC about the availability of information regarding this document. You may obtain publicly-available information related to this document using any of the following methods:

- *Federal Rulemaking Web site:* Go to *http://www.regulations.gov* and search for Docket ID NRC–2015–0096. Address questions about NRC dockets to Carol Gallagher; telephone: 301–415–3463; email: *Carol.Gallagher@nrc.gov.* For technical questions, contact the individual listed in the **FOR FURTHER INFORMATION CONTACT** section of this document.
- *NRC's Agencywide Documents Access and Management System (ADAMS):* You may obtain publicly-available documents online in the ADAMS Public Documents collection at *http://www.nrc.gov/reading-rm/adams.html.* To begin the search, select ''*ADAMS Public Documents*'' and then select ''*Begin Web-based ADAMS Search.*'' For problems with ADAMS, please contact the NRC's Public Document Room (PDR) reference staff at 1–800–397–4209, 301–415–4737, or by email to *pdr.resource@nrc.gov.* The ADAMS accession number for each document referenced (if that document is available in ADAMS) is provided the first time that a document is referenced.
- *NRC's PDR:* You may examine and purchase copies of public documents at the NRC's PDR, Room O1–F21, One White Flint North, 11555 Rockville Pike, Rockville, Maryland 20852.

FOR FURTHER INFORMATION CONTACT: Chris Allen, Office of Nuclear Material Safety and Safeguards, U.S. Nuclear Regulatory Commission, Washington, DC 20555–0001; telephone: 301–415–6877; email: *William.Allen@nrc.gov.*

SUPPLEMENTARY INFORMATION:

I. Introduction

The NRC received, by letter dated February 17, 2015, a license amendment application from the Department of Energy (DOE), requesting a revision to the Technical Specifications for the Fort St. Vrain (FSV) independent spent fuel storage installation located in Platteville, Colorado (ADAMS Accession No. ML15068A009). License No. SNM–2504 authorizes the licensee to receive, store, and transfer spent fuel from the decommissioned FSV Nuclear Generating Station. The proposed amendment request seeks to revise response times associated with Fuel Storage Container leak tests and to make an editorial change to the Technical Specifications table of contents.

An NRC administrative completeness review, documented in a letter to DOE dated March 6, 2015, found the application acceptable to begin a technical review (ADAMS Accession No. ML15069A008). The NRC's Office of Nuclear Materials Safety and Safeguards has docketed this application under docket number 72–09. If the NRC approves the application, the approval will be documented in an amendment to NRC License No. SNM–2504. However, before approving the proposed amendment, the NRC will need to make the findings required by the Atomic Energy Act of 1954, as amended (the Act), and the NRC's regulations. These findings will be documented in a safety evaluation report. The NRC will evaluate this amendment and make findings consistent with the National Environmental Policy Act and 10 CFR part 51.

II. Opportunity To Request a Hearing and Petition for Leave To Intervene

Within 60 days after the date of publication of this notice, any person(s) whose interest may be affected by this action may file a request for a hearing and a petition to intervene with respect to issuance of the amendment to the subject facility operating license or combined license. Requests for a hearing and a petition for leave to intervene shall be filed in accordance with the Commission's ''Agency Rules of Practice and Procedure'' in 10 CFR part 2. Interested person(s) should consult a current copy of 10 CFR 2.309, which is available at the NRC's PDR, located in One White Flint North, Room O1–F21 (first floor), 11555 Rockville Pike, Rockville, Maryland 20852. The NRC's regulations are accessible electronically from the NRC Library on the NRC's Web site at *http://www.nrc.gov/reading-rm/doc-collections/cfr/.* If a request for a hearing or petition for leave to intervene is filed within 60 days, the Commission or a presiding officer designated by the Commission or by the Chief Administrative Judge of the Atomic Safety and Licensing Board Panel will rule on the request and/or petition. The Secretary or the Chief Administrative Judge of the Atomic Safety and Licensing Board will issue a notice of hearing or an appropriate order.

As required by 10 CFR 2.309, a petition for leave to intervene shall set forth, with particularity, the interest of

the petitioner in the proceeding and how that interest may be affected by the results of the proceeding. The petition should specifically explain the reasons why intervention should be permitted, with particular reference to the following general requirements: (1) The name, address, and telephone number of the requestor or petitioner; (2) the nature of the requestor's/petitioner's right under the Act to be made a party to the proceeding; (3) the nature and extent of the requestor's/petitioner's property, financial, or other interest in the proceeding; and (4) the possible effect of any decision or order which may be entered in the proceeding on the requestor's/petitioner's interest. The petition must also set forth the specific contentions which the requestor/petitioner seeks to have litigated at the proceeding.

Each contention must consist of a specific statement of the issue of law or fact to be raised or controverted. In addition, the requestor/petitioner shall provide a brief explanation of the bases for the contention and a concise statement of the alleged facts or expert opinion that support the contention and on which the requestor/petitioner intends to rely in proving the contention at the hearing. The requestor/petitioner must also provide references to those specific sources and documents of which the petitioner is aware and on which the requestor/petitioner intends to rely to establish those facts or expert opinion. The petition must include sufficient information to show that a genuine dispute exists with the applicant on a material issue of law or fact. Contentions shall be limited to matters within the scope of the amendment under consideration. The contention must be one which, if proven, would entitle the requestor/petitioner to relief. A requestor/petitioner who fails to satisfy these requirements with respect to at least one contention will not be permitted to participate as a party.

Those permitted to intervene become parties to the proceeding, subject to any limitations in the order granting leave to intervene, and have the opportunity to participate fully in the conduct of the hearing with respect to resolution of that person's admitted contentions, including the opportunity to present evidence and to submit a cross-examination plan for cross-examination of witnesses, consistent with NRC's regulations, policies, and procedures. The Atomic Safety and Licensing Board will set the time and place for any prehearing conferences and evidentiary hearings, and the appropriate notices will be provided.

Petitions for leave to intervene must be filed no later than 60 days from the date of publication of this notice. Requests for hearing, petitions for leave to intervene, and motions for leave to file new or amended contentions that are filed after the 60-day deadline will not be entertained absent a determination by the presiding officer that the filing demonstrates good cause by satisfying the three factors in 10 CFR 2.309(c)(1)(i)–(iii).

A State, local governmental body, federally-recognized Indian tribe, or agency thereof, may submit a petition to the Commission to participate as a party under 10 CFR 2.309(h)(1). The petition should state the nature and extent of the petitioner's interest in the proceeding. The petition should be submitted to the Commission by June 19, 2015. The petition must be filed in accordance with the filing instructions in the ''Electronic Submissions (E-Filing)'' section of this document, and should meet the requirements for petitions for leave to intervene set forth in this section, except that under 10 CFR 2.309(h)(2) a State, local governmental body, or Federally-recognized Indian tribe, or agency thereof does not need to address the standing requirements in 10 CFR 2.309(d) if the facility is located within its boundaries. A State, local governmental body, Federally-recognized Indian tribe, or agency thereof may also have the opportunity to participate under 10 CFR 2.315(c).

If a hearing is granted, any person who does not wish, or is not qualified, to become a party to the proceeding may, in the discretion of the presiding officer, be permitted to make a limited appearance pursuant to the provisions of 10 CFR 2.315(a). A person making a limited appearance may make an oral or written statement of position on the issues, but may not otherwise participate in the proceeding. A limited appearance may be made at any session of the hearing or at any prehearing conference, subject to the limits and conditions as may be imposed by the presiding officer. Persons desiring to make a limited appearance are requested to inform the Secretary of the Commission by June 19, 2015.

III. Electronic Submissions (E-Filing)

All documents filed in NRC adjudicatory proceedings, including a request for hearing, a petition for leave to intervene, any motion or other document filed in the proceeding prior to the submission of a request for hearing or petition to intervene, and documents filed by interested governmental entities participating under 10 CFR 2.315(c), must be filed in accordance with the NRC's E-Filing rule (72 FR 49139; August 28, 2007). The E-Filing process requires participants to submit and serve all adjudicatory documents over the internet, or in some cases to mail copies on electronic storage media. Participants may not submit paper copies of their filings unless they seek an exemption in accordance with the procedures described below.

To comply with the procedural requirements of E-Filing, at least ten days prior to the filing deadline, the participant should contact the Office of the Secretary by email at *hearing.docket@nrc.gov,* or by telephone at 301–415–1677, to request (1) a digital identification (ID) certificate, which allows the participant (or its counsel or representative) to digitally sign documents and access the E-Submittal server for any proceeding in which it is participating; and (2) advise the Secretary that the participant will be submitting a request or petition for hearing (even in instances in which the participant, or its counsel or representative, already holds an NRC-issued digital ID certificate). Based upon this information, the Secretary will establish an electronic docket for the hearing in this proceeding if the Secretary has not already established an electronic docket.

Information about applying for a digital ID certificate is available on the NRC's public Web site at *http://www.nrc.gov/site-help/e-submittals/getting-started.html.* System requirements for accessing the E-Submittal server are detailed in the NRC's ''Guidance for Electronic Submission,'' which is available on the agency's public Web site at *http://www.nrc.gov/site-help/e-submittals.html.* Participants may attempt to use other software not listed on the Web site, but should note that the NRC's E-Filing system does not support unlisted software, and the NRC Meta System Help Desk will not be able to offer assistance in using unlisted software.

If a participant is electronically submitting a document to the NRC in accordance with the E-Filing rule, the participant must file the document using the NRC's online, Web-based submission form. In order to serve documents through the Electronic Information Exchange System, users will be required to install a Web browser plug-in from the NRC's Web site. Further information on the Web-based submission form, including the installation of the Web browser plug-in, is available on the NRC's public Web

site at *http://www.nrc.gov/site-help/e-submittals.html.*

Once a participant has obtained a digital ID certificate and a docket has been created, the participant can then submit a request for hearing or petition for leave to intervene. Submissions should be in Portable Document Format (PDF) in accordance with NRC guidance available on the NRC's public Web site at *http://www.nrc.gov/site-help/e-submittals.html.* A filing is considered complete at the time the documents are submitted through the NRC's E-Filing system. To be timely, an electronic filing must be submitted to the E-Filing system no later than 11:59 p.m. Eastern Time on the due date. Upon receipt of a transmission, the E-Filing system time-stamps the document and sends the submitter an email notice confirming receipt of the document. The E-Filing system also distributes an email notice that provides access to the document to the NRC's Office of the General Counsel and any others who have advised the Office of the Secretary that they wish to participate in the proceeding, so that the filer need not serve the documents on those participants separately. Therefore, applicants and other participants (or their counsel or representative) must apply for and receive a digital ID certificate before a hearing request/petition to intervene is filed so that they can obtain access to the document via the E-Filing system.

A person filing electronically using the NRC's adjudicatory E-Filing system may seek assistance by contacting the NRC Meta System Help Desk through the ''Contact Us'' link located on the NRC's public Web site at *http://www.nrc.gov/site-help/e-submittals.html,* by email to *MSHD.Resource@nrc.gov,* or by a toll-free call at 1–866–672–7640. The NRC Meta System Help Desk is available between 8 a.m. and 8 p.m., Eastern Time, Monday through Friday, excluding government holidays.

Participants who believe that they have a good cause for not submitting documents electronically must file an exemption request, in accordance with 10 CFR 2.302(g), with their initial paper filing requesting authorization to continue to submit documents in paper format. Such filings must be submitted by: (1) First class mail addressed to the Office of the Secretary of the Commission, U.S. Nuclear Regulatory Commission, Washington, DC 20555–0001, Attention: Rulemaking and Adjudications Staff; or (2) courier, express mail, or expedited delivery service to the Office of the Secretary, Sixteenth Floor, One White Flint North, 11555 Rockville Pike, Rockville, Maryland 20852, Attention: Rulemaking and Adjudications Staff. Participants filing a document in this manner are responsible for serving the document on all other participants. Filing is considered complete by first-class mail as of the time of deposit in the mail, or by courier, express mail, or expedited delivery service upon depositing the document with the provider of the service. A presiding officer, having granted an exemption request from using E-Filing, may require a participant or party to use E-Filing if the presiding officer subsequently determines that the reason for granting the exemption from use of E-Filing no longer exists.

Documents submitted in adjudicatory proceedings will appear in the NRC's electronic hearing docket which is available to the public at *http://ehd1.nrc.gov/ehd/,* unless excluded pursuant to an order of the Commission, or the presiding officer. Participants are requested not to include personal privacy information, such as social security numbers, home addresses, or home phone numbers in their filings, unless an NRC regulation or other law requires submission of such information. However, a request to intervene will require including information on local residence in order to demonstrate a proximity assertion of interest in the proceeding. With respect to copyrighted works, except for limited excerpts that serve the purpose of the adjudicatory filings and would constitute a Fair Use application, participants are requested not to include copyrighted materials in their submission.

Dated at Rockville, Maryland, this 10 day of April, 2015.

For the Nuclear Regulatory Commission.

Michele Sampson,

Chief, Spent Fuel Licensing Branch, Division of Spent Fuel Management, Office of Nuclear Material Safety and Safeguards.

[FR Doc. 2015–09025 Filed 4–17–15; 8:45 am]

BILLING CODE 7590–01–P

NUCLEAR REGULATORY COMMISSION

[NRC–2015–0099]

Sizing of Large Lead-Acid Storage Batteries

AGENCY: Nuclear Regulatory Commission.

ACTION: Draft regulatory guide, request for comment.

SUMMARY: The U.S. Nuclear Regulatory Commission (NRC) is issuing draft regulatory guide (DG), DG–1311, ''Sizing of Large Lead-Acid Batteries'' for public comment. This guidance is proposed revision 1 of regulatory guide (RG), RG 1.212, ''Sizing of Large Lead-Acid Storage Batteries.'' This DG endorses, with certain clarifications, the Institute of Electrical and Electronic Engineers (IEEE) Standard 485–2010, ''IEEE Recommended Practice for Sizing Lead-Acid Batteries for Stationary Applications.'' This DG describes methods acceptable to the NRC staff for complying with the design requirements for stationary battery applications in full float operation for nuclear power plants.

DATES: Submit comments by June 19, 2015. Comments received after this date will be considered if practical to do so, but the NRC is able to ensure consideration only for comments received on or before this date. Although a time limit is given, comments and suggestions in connection with items for inclusion in guides currently being developed or improvements in all published guides are encouraged at any time.

ADDRESSES: You may submit comment by any of the following methods (unless this document describes a different method for submitting comments on a specific subject):

- *Federal Rulemaking Web site:* Go to *http://www.regulations.gov* and search for Docket ID NRC–2015–0099. Address questions about NRC dockets to Carol Gallagher; telephone: 301–415–3463; email: *Carol.Gallagher@nrc.gov.* For technical questions, contact the individual listed in the **FOR FURTHER INFORMATION CONTACT** section of this document.
- *Mail comments to:* Cindy Bladey, Office of Administration, Mail Stop: O12–H08, U.S. Nuclear Regulatory Commission, Washington, DC 20555–0001.

For additional direction on accessing information and submitting comments, see ''Obtaining Information and Submitting Comments'' in the **SUPPLEMENTARY INFORMATION** section of this document.

FOR FURTHER INFORMATION CONTACT: Liliana Ramadan, telephone: 301–415–7000, email: *Liliana.Ramadan@nrc.gov* or Mark Orr, telephone: 301–415–7000, email: *Mark.Orr@nrc.gov.* Both are staff of the Office of Nuclear Regulatory Research, U.S. Nuclear Regulatory Commission, Washington, DC 20555–0001.

SUPPLEMENTARY INFORMATION:

I. Obtaining Information and Submitting Comments

A. Obtaining Information

Please refer to Docket ID NRC–2015–0099 when contacting the NRC about the availability of information regarding this document. You may obtain publicly-available information related to this action by the following methods:

- *Federal Rulemaking Web site:* Go to *http://www.regulations.gov* and search for Docket ID NRC–2015–0099.
- *NRC's Agencywide Documents Access and Management System (ADAMS):* You may obtain publicly-available documents online in the ADAMS Public Documents collection at *http://www.nrc.gov/reading-rm/adams.html.* To begin the search, select ''*ADAMS Public Documents*'' and then select ''*Begin Web-based ADAMS Search.*'' For problems with ADAMS, please contact the NRC's Public Document Room (PDR) reference staff at 1–800–397–4209, 301–415–4737, or by email to *pdr.resource@nrc.gov.* The ADAMS accession number for each document referenced (if it available in ADAMS) is provided the first time that a document is referenced. The DG is electronically available in ADAMS under Accession No. ML14031A265.
- *NRC's PDR:* You may examine and purchase copies of public documents at the NRC's PDR, Room O1–F21, One White Flint North, 11555 Rockville Pike, Rockville, Maryland 20852.

B. Submitting Comments

Please include Docket ID NRC–2015–0099 in the subject line of your comment submission, in order to ensure that the NRC is able to make your comment submission available to the public in this docket.

The NRC cautions you not to include identifying or contact information that you do not want to be publicly disclosed in your comment submission. The NRC posts all comment submissions at *http://www.regulations.gov* as well as entering the comment submissions into ADAMS. The NRC does not routinely edit comment submissions to remove identifying or contact information.

If you are requesting or aggregating comments from other persons for submission to the NRC, then you should inform those persons not to include identifying or contact information that they do not want to be publicly disclosed in their comment submission. Your request should state that the NRC does not routinely edit comment submissions to remove such information before making the comment submissions available to the public or entering the comment submissions into ADAMS.

II. Additional Information

The NRC is issuing for public comment a DG in the NRC's ''Regulatory Guide'' series. This series was developed to describe and make available to the public such information as methods that are acceptable to the NRC staff for implementing specific parts of the NRC's regulations, techniques that the staff uses in evaluating specific problems or postulated accidents, and data that the staff needs in its review of applications for permits and licenses.

The DG, entitled, ''Sizing of Large Lead Acid Storage Batteries'' is temporarily identified by its task number, DG–1311. This DG–1311 is proposed revision 1 of RG 1.212. This DG endorses, with certain clarifications, IEEE Standard 485–2010, ''IEEE Recommended Practice for Sizing Lead-Acid Batteries for Stationary Applications.'' This DG describes methods acceptable to the staff for complying with the design requirements for stationary battery applications in full float operation for nuclear power plants.

Copies of IEEE standards may be purchased from the Institute of Electrical and Electronics Engineers Service Center, 445 Hoes Lane, P.O. Box 1331, Piscataway, NJ 08855, or through the IEEE's public Web site at *http://www.ieee.org/publications_standards/index.html.*

III. Backfitting and Issue Finality

Issuing of this DG, if finalized, would not constitute backfitting as defined in § 50.109 of Title 10 of the *Code of Federal Regulations* (10 CFR), (the Backfit Rule), and would not otherwise be inconsistent with the issue finality provisions in 10 CFR part 52. As discussed in the ''Implementation'' section of this DG, the NRC has no current intention to impose this DG on current holders of Part 50 operating licenses or Part 52 combined licenses.

This DG, if finalized, could be applied to applications for operating licenses and combined licenses docketed by the NRC as of the date of issuance of the final RG, as well as future applications for operating licenses and combined licenses submitted after the issuance of the RG. Such action would not constitute backfitting as defined in 10 CFR 50.109(a)(1) or be otherwise inconsistent with the applicable issue finality provision in 10 CFR part 52, inasmuch as such applicants or potential applicants, with exceptions not applicable here, are not within the scope of entities protected by the Backfit Rule or the relevant issue finality provisions in part 52.

Dated at Rockville, Maryland, this 14th day of April, 2015.

For the Nuclear Regulatory Commission.

Harriet Karagiannis,

Acting Chief, Regulatory Guidance and Generic Issues Branch, Division of Engineering, Office of Nuclear Regulatory Research.

[FR Doc. 2015–08963 Filed 4–17–15; 8:45 am]

BILLING CODE 7590–01–P

POSTAL REGULATORY COMMISSION

[Docket No. CP2014–31; Order No. 2441]

New Postal Product

AGENCY: Postal Regulatory Commission.

ACTION: Notice.

SUMMARY: The Commission is noticing a recent Postal Service filing concerning an amendment to an existing Priority Mail Contract 77 negotiated service agreement. This notice informs the public of the filing, invites public comment, and takes other administrative steps.

DATES: *Comments are due:* April 21, 2015.

ADDRESSES: Submit comments electronically via the Commission's Filing Online system at *http://www.prc.gov.* Those who cannot submit comments electronically should contact the person identified in the **FOR FURTHER INFORMATION CONTACT** section by telephone for advice on filing alternatives.

FOR FURTHER INFORMATION CONTACT: David A. Trissell, General Counsel, at 202–789–6820.

SUPPLEMENTARY INFORMATION:

Table of Contents

I. Introduction
II. Notice of Filings
III. Ordering Paragraphs

I. Introduction

On April 10, 2015, the Postal Service filed notice that it has agreed to an Amendment to the existing Priority Mail Contract 77 negotiated service agreement approved in this docket.[1] In support of its Notice, the Postal Service includes a redacted copy of the Amendment and a certification of compliance with 39 U.S.C. 3633(a), as

[1] Notice of United States Postal Service of Change in Prices Pursuant to Amendment to Priority Mail Contract 77, April 10, 2015 (Notice); see also Docket Nos. MC2014–18 and CP2014–31, Order No. 2010, Order Adding Priority Mail Contract 77 to the Competitive Product List, March 7, 2014.

required by 39 CFR 3015.5. See respectively, Attachment A and Attachment B.

The Postal Service also filed the unredacted Amendment and supporting financial information under seal. Notice at 1. The Postal Service seeks to incorporate by reference the Application for Non-Public Treatment originally filed in this docket for the protection of information that it has filed under seal. *Id.*

The Amendment revises the customer's Priority Mail contract rates, which appear in Terms I.E., Table 2, and I.F. Notice, Attachment A at 1–2.

The Postal Service intends for the Amendment to become effective one business day after the date that the Commission completes its review of the Notice. Notice at 1. The Postal Service asserts that the Amendment is in compliance with 39 U.S.C. 3633. Notice, Attachment B at 1.

II. Notice of Filings

The Commission invites comments on whether the changes presented in the Postal Service's Notice are consistent with the policies of 39 U.S.C. 3632, 3633, or 3642, 39 CFR 3015.5, and 39 CFR part 3020, subpart B. Comments are due no later than April 21, 2015. The public portions of these filings can be accessed via the Commission's Web site (*http://www.prc.gov*).

The Commission appoints Kenneth R. Moeller to represent the interests of the general public (Public Representative) in this docket.

III. Ordering Paragraphs

It is ordered:

1. The Commission reopens Docket No. CP2014–31 for consideration of matters raised by the Postal Service's Notice.

2. Pursuant to 39 U.S.C. 505, the Commission appoints Kenneth R. Moeller to serve as an officer of the Commission (Public Representative) to represent the interests of the general public in this proceeding.

3. Comments are due no later than April 21, 2015.

4. The Secretary shall arrange for publication of this order in the **Federal Register**.

By the Commission.

Shoshana M. Grove,

Secretary.

[FR Doc. 2015–08930 Filed 4–17–15; 8:45 am]

BILLING CODE 7710–FW–P

SECURITIES AND EXCHANGE COMMISSION

[Release No. 34–74726; File No. SR–BATS–2015–29]

Self-Regulatory Organizations; BATS Exchange, Inc.; Notice of Filing and Immediate Effectiveness of a Proposed Rule Change To Amend the Content of the BATS One Feed Under Rule 11.22(j) To Include Consolidated Volume for all Listed Equity Securities

April 14, 2015.

Pursuant to Section 19(b)(1) of the Securities Exchange Act of 1934 (the ''Act''),[1] and Rule 19b-4 thereunder,[2] notice is hereby given that on April 6, 2015, BATS Exchange, Inc. (the ''Exchange'' or ''BZX'') filed with the Securities and Exchange Commission (''Commission'') the proposed rule change as described in Items I and II below, which Items have been prepared by the Exchange. The Exchange has designated this proposal as a ''non-controversial'' proposed rule change pursuant to Section 19(b)(3)(A) of the Act[3] and Rule 19b–4(f)(6)(iii) thereunder,[4] which renders it effective upon filing with the Commission. The Commission is publishing this notice to solicit comments on the proposed rule change from interested persons.

I. Self-Regulatory Organization's Statement of the Terms of the Substance of the Proposed Rule Change

The Exchange amend [sic] the content of the BATS One Feed under Rule 11.22(j) to include consolidated volume for all listed equity securities. The text of the proposed rule change is available at the Exchange's Web site at *www.batstrading.com,* at the principal office of the Exchange, and at the Commission's Public Reference Room.

II. Self-Regulatory Organization's Statement of the Purpose of, and Statutory Basis for, the Proposed Rule Change

In its filing with the Commission, the Exchange included statements concerning the purpose of and basis for the proposed rule change and discussed any comments it received on the proposed rule change. The text of these statements may be examined at the places specified in Item IV below. The Exchange has prepared summaries, set forth in Sections A, B, and C below, of the most significant parts of such statements.

[1] 15 U.S.C. 78s(b)(1).

[2] 17 CFR 240.19b–4.

[3] 15 U.S.C. 78s(b)(3)(A).

[4] 17 CFR 240.19b–4(f)(6)(iii).

A. Self-Regulatory Organization's Statement of the Purpose of, and Statutory Basis for, the Proposed Rule Change

1. Purpose

The Exchange proposes to amend the content of the BATS One Feed under Rule 11.22(j) to include consolidated volume for all listed equity securities. The Commission recently approved a proposed rule change by the Exchange to establish a new market data product called the BATS One Feed.[5] The BATS One Feed is a data feed that disseminates, on a real-time basis, the aggregate best bid and offer (''BBO'') of all displayed orders for securities traded on BZX and its affiliated exchanges[6] and for which the BATS Exchanges reports quotes under the Consolidated Tape Association (''CTA'') Plan or the Nasdaq/UTP Plan.[7]

The last sale information disseminated as part of the BATS One Feed includes the price, size, time of execution, and individual BATS Exchange on which the trade was executed. The last sale information also includes the cumulative number of shares executed on all BATS Exchanges for that trading day.[8] The Exchange now proposes to expand the last sale

[5] *See* Securities Exchange Act Release No. 73918 (December 23, 2014), 79 FR 78920 (December 31, 2014) (File Nos. SR–EDGX–2014–25; SR–EDGA–2014–25; SR–BATS–2014–055; SR–BYX–2014–030) (Notice of Amendments No. 2 and Order Granting Accelerated Approval to Proposed Rule Changes, as Modified by Amendments Nos. 1 and 2, to Establish a New Market Data Product called the BATS One Feed) (''BATS One Approval Order'').

[6] BZX's affiliated exchanges are the BATS Y-Exchange, Inc. (''BYX''), the EDGA Exchange, Inc. (''EDGA''), and the EDGX Exchange, Inc. (''EDGX'', together with EDGA, BZX, and BYX, the ''BATS Exchanges''). On January 23, 2014, BATS Global Markets, Inc. (''BGMI''), the former parent company of the Exchange and BYX, completed its business combination with Direct Edge Holdings LLC, the parent company of EDGA and EDGX. *See* Securities Exchange Act Release No. 71375 (January 23, 2014), 79 FR 4771 (January 29, 2014) (SR–BATS–2013–059; SR–BYX–2013–039). Upon completion of the business combination, DE Holdings and BGMI each became intermediate holding companies, held under a single new holding company. The new holding company, formerly named ''BATS Global Markets Holdings, Inc.,'' changed its name to ''BATS Global Markets, Inc.'' and BGMI changed its name to ''BATS Global Markets Holdings, Inc.''

[7] The Exchange understands that each of the BATS Exchanges will separately file substantially similar proposed rule changes with the Commission to implement fees for the BATS One Feed.

[8] The BATS One Feed also contains optional functionality which enables recipients to receive aggregated two-sided quotations from the BATS Exchanges for up to five (5) price levels for all securities that are traded on the BATS Exchanges in addition to the BATS One Summary Feed (''BATS One Premium Feed''). For each price level on one of the BATS Exchanges, the BATS One Premium Feed includes a two-sided quote and the number of shares available to buy and sell at that particular price level.

information to include consolidated volume for all listed equity securities regardless of where the transaction was executed. The Exchange would obtain the consolidated volume directly from the securities information processors and then distribute in a manner consistent with the requirements for redistributing such data as set forth in the CTA Plan and Nasdaq UTP Plan.[9]

2. Statutory Basis

The Exchange believes that its proposal is consistent with Section 6(b) of the Act[10] in general, and furthers the objectives of Section 6(b)(5) of the Act[11] in particular, in that it is designed to promote just and equitable principles of trade, to foster cooperation and coordination with persons engaged in facilitating transactions in securities, to remove impediments to and perfect the mechanism of a free and open market and a national market system and, in general, to protect investors and the public interest. The Exchange also believes that the proposed rule change is consistent with Section 11(A) of the Act[12] in that it supports (i) fair competition among brokers and dealers, among exchange markets, and between exchange markets and markets other than exchange markets and (ii) the availability to brokers, dealers, and investors of information with respect to quotations for and transactions in securities. Furthermore, the proposed rule change is consistent with Rule 603 of Regulation NMS,[13] which provides that any national securities exchange that distributes information with respect to quotations for or transactions in an NMS stock do so on terms that are not unreasonably discriminatory. In adopting Regulation NMS, the Commission granted self-regulatory organizations and broker-dealers increased authority and flexibility to offer new and unique market data products to the public. It was believed that this authority would expand the amount of data available to consumers, and also spur innovation and competition for the provision of market data.

The proposed rule change is designed to promote just and equitable principles of trade and remove impediments to and perfect the mechanism of a free and open market and a national market system by providing for the broader dissemination of consolidated volume to investors. The Exchange also believes this proposal is consistent with Section 6(b)(5) of the Act because it protects investors and the public interest and promotes just and equitable principles of trade by providing investors with new options for receiving consolidated volume. The Exchange also believes that the proposed rule change is reasonable because consolidated volume is currently included in a competing market data products offered by the NYSE and Nasdaq.[14] Therefore, the Exchange believes the proposed rule change removes impediments to and perfects the mechanism of a free and open market and a national market system, and, in general, protects investors and the public interest.

Lastly, the proposal would not permit unfair discrimination because the consolidated volume will be available to all of the Exchange's customers and market data vendors on an equivalent basis. In addition, any customer that wishes to receive consolidated volume via a different source will be able to do so.

B. Self-Regulatory Organization's Statement on Burden on Competition

The Exchange does not believe that the proposal will impose any burden on competition not necessary or appropriate in furtherance of the purposes of the Act. The Exchange believes that the proposed rule change will enhance competition because it would enable the Exchange to include consolidated volume as part of the BATS One Feed, thereby enabling it to better compete with similar market data products currently offered by the NYSE and Nasdaq that include such volume.[15]

Finally, although the BATS Exchanges are the exclusive distributors of the individual data feeds from which certain data elements would be taken to create the BATS One Feed, the Exchange is not the exclusive distributor of the consolidated volume that would be included in the BATS One Feed. A vendor seeking to offer a similar product and include consolidated volume would be able to do so on the same terms as the Exchange from a cost perspective. As discussed in in the BATS One Approval Order,[16] any entity may separately purchase the individual underlying products, and if they so choose, perform a similar aggregation and consolidation function that the Exchange performs in creating the BATS One Feed, and offer a data feed with the same information included in the BATS One Feed to sell and distribute it to its clients with no greater cost than the Exchange. Likewise, a competing vendor could also receive consolidated volume from the securities information processors and include it as part of their product to be disseminated to their customers under the same terms and policies provided to the Exchange.[17] Therefore, the Exchange believes the inclusion of consolidated volume in the BATS One Feed would not impose any burden on competition not necessary or appropriate in furtherance of the purposes of the Act.

C. Self-Regulatory Organization's Statement on Comments on the Proposed Rule Change Received From Members, Participants, or Others

The Exchange has neither solicited nor received written comments on the proposed rule change.

III. Date of Effectiveness of the Proposed Rule Change and Timing for Commission Action

Because the proposed rule change does not (i) significantly affect the protection of investors or the public interest; (ii) impose any significant burden on competition; and (iii) become operative for 30 days from the date on which it was filed, or such shorter time as the Commission may designate if

[9] *See* CTA Consolidated Volume Display Policy *available at https://www.ctaplan.com* (dated March 2015). The CTA Consolidated Volume Display Policy requires that, ''[i]f a Customer calculates the CTA Consolidated Volume and displays that alongside last sale prices or bid-asked quotes that are not consolidated prices or quotes under the CTA Plan or the CQ Plan, then the Customer must incorporate into its display the following statement: ''Realtime quote and/or trade prices are not sourced from all markets.'' Customer must also assure that any person included in the redistribution chain starting with the Customer conspicuously places such a statement in any such display that it provides.'' *Id.*

[10] 15 U.S.C. 78f(b).

[11] 15 U.S.C. 78f(b)(5).

[12] 15 U.S.C. 78k–1.

[13] *See* 17 CFR 242.603.

[14] *See* Securities Exchange Act Release No. 73553 (November 6, 2014), 79 FR 67491 (November 13, 2014) (SR–NYSE–2014–40) (Notice of Amendment No. 1 and Order Granting Accelerated Approval to a Proposed Rule Change, as Modified by Amendment No.1, To Establish the NYSE Best Quote & Trades (''BQT'') Data Feed); *http://www.nyxdata.com/Data-Products/NYSE-Best-Quote-and-Trades* (last visited May 27, 2014) (data feed providing unified view of BBO and last sale information for the NYSE, NYSE Arca, and NYSE MKT) (''NYSE BQT Approval Order''). *See also* Nasdaq Basic, *http://www.nasdaqtrader.com/Trader.aspx?id=nasdaqbasic* (last visited March 26, 2015) (data feed offering the BBO and Last Sale information for all U.S. exchange-listed securities based on liquidity within the Nasdaq market center, as well as trades reported to the FINRA/Nasdaq Trade Reporting Facility (''TRF'')); *and* Nasdaq NLS Plus, *http://www.nasdaqtrader.com/Trader.aspx?id=NLSplus* (last visited July 8, 2014) (data feed providing last sale data as well as consolidated volume from the following Nasdaq OMX markets for U.S. exchange-listed securities: Nasdaq, FINRA/Nasdaq TRF, Nasdaq OMX BX, and Nasdaq OMX PSX).

[15] *See id.* (noting that NYSE BQT and NLS Plus carry consolidated volume for all listed equities).

[16] *See* BATS One Approval Order, *supra* note 5.

[17] *See* CTA Consolidated Volume Display Policy, *supra* note 9.

consistent with the protection of investors and the public interest, the proposed rule change has become effective pursuant to Section 19(b)(3)(A) of the Act [18] and Rule 19b–4(f)(6)(iii) thereunder.[19]

A proposed rule change filed pursuant to Rule 19b–4(f)(6) under the Act [20] normally does not become operative for 30 days after the date of its filing. However, Rule 19b–4(f)(6)(iii) [21] permits the Commission to designate a shorter time if such action is consistent with the protection of investors and the public interest. The Exchange has asked the Commission to waive the 30-day operative delay so that the proposal may become operative immediately upon filing. The Exchange believes that waiving the 30-day operative delay is consistent with the protection of investors and the public interest because it would allow the Exchange to timely offer investors a new option for receiving consolidated volume information. The Exchange further notes that other exchanges currently offer similar data products that include consolidated volume.[22] The Commission believes that waiving the 30-day operative delay is consistent with the protection of investors and the public interest. Therefore, the Commission hereby waives the operative delay and designates the proposed rule change operative upon filing.[23]

At any time within 60 days of the filing of the proposed rule change, the Commission summarily may temporarily suspend such rule change if it appears to the Commission that such action is necessary or appropriate in the public interest, for the protection of investors, or otherwise in furtherance of the purposes of the Act. If the Commission takes such action, the Commission shall institute proceedings to determine whether the proposed rule should be approved or disapproved.

[18] 15 U.S.C. 78s(b)(3)(A).

[19] 17 CFR 240.19b–4(f)(6)(iii). As required under Rule 19b–4(f)(6)(iii), the Exchange provided the Commission with written notice of its intent to file the proposed rule change, along with a brief description and the text of the proposed rule change, at least five business days prior to the date of filing of the proposed rule change, or such shorter time as designated by the Commission.

[20] 17 CFR 240.19b–4(f)(6).

[21] 17 CFR 240.19b–4(f)(6)(iii).

[22] *See supra* note 14 (noting that NYSE BQT and NLS Plus carry consolidated volume for all listed equities).

[23] For purposes only of waiving the 30-day operative delay, the Commission has considered the proposed rule's impact on efficiency, competition, and capital formation. *See* 15 U.S.C. 78c(f).

IV. Solicitation of Comments

Interested persons are invited to submit written data, views, and arguments concerning the foregoing, including whether the proposed rule change is consistent with the Act. Comments may be submitted by any of the following methods:

Electronic Comments

- Use the Commission's Internet comment form (*http://www.sec.gov/rules/sro.shtml*); or
- Send an email to *rule-comments@sec.gov.* Please include File Number SR–BATS–2015–29 on the subject line.

Paper Comments

- Send paper comments in triplicate to Brent J. Fields, Secretary, Securities and Exchange Commission, 100 F Street NE., Washington, DC 20549–1090.

All submissions should refer to File Number SR–BATS–2015–29. This file number should be included on the subject line if email is used. To help the Commission process and review your comments more efficiently, please use only one method. The Commission will post all comments on the Commission's Internet Web site (*http://www.sec.gov/rules/sro.shtml*). Copies of the submission, all subsequent amendments, all written statements with respect to the proposed rule change that are filed with the Commission, and all written communications relating to the proposed rule change between the Commission and any person, other than those that may be withheld from the public in accordance with the provisions of 5 U.S.C. 552, will be available for Web site viewing and printing in the Commission's Public Reference Room, 100 F Street NE., Washington, DC 20549 on official business days between the hours of 10:00 a.m. and 3:00 p.m. Copies of such filing also will be available for inspection and copying at the principal office of the Exchange. All comments received will be posted without change; the Commission does not edit personal identifying information from submissions. You should submit only information that you wish to make available publicly. All submissions should refer to File Number SR–BATS–2015–29, and should be submitted on or before May 11, 2015.

For the Commission, by the Division of Trading and Markets, pursuant to delegated authority.[24]

Brent J. Fields,

Secretary.

[FR Doc. 2015–08942 Filed 4–17–15; 8:45 am]

BILLING CODE 8011–01–P

[24] 17 CFR 200.30–3(a)(12).

SECURITIES AND EXCHANGE COMMISSION

[Release No. 34–74725; File No. SR–NASDAQ–2015–032]

Self-Regulatory Organizations; The NASDAQ Stock Market LLC; Notice of Filing and Immediate Effectiveness of Proposed Rule Change To Amend NASDAQ Rules 7014 and 7018

April 14, 2015.

Pursuant to Section 19(b)(1) of the Securities Exchange Act of 1934 (''Act''),[1] and Rule 19b–4 thereunder,[2] notice is hereby given that, on April 1, 2015, The NASDAQ Stock Market LLC (''NASDAQ'' or the ''Exchange'') filed with the Securities and Exchange Commission (''Commission'') the proposed rule change as described in Items I and II below, which Items have been prepared by the Exchange. The Commission is publishing this notice to solicit comments on the proposed rule change from interested persons.

I. Self-Regulatory Organization's Statement of the Terms of the Substance of the Proposed Rule Change

NASDAQ is proposing changes to the Qualified Market Maker (''QMM'') Incentive Program under Rule 7014, and the qualification requirements for certain fees relating to Market-on-Close and/or Limit-on-Close orders under Rule 7018(a).

The text of the proposed rule change is available at *nasdaq.cchwallstreet.com* at NASDAQ's principal office, and at the Commission's Public Reference Room.

II. Self-Regulatory Organization's Statement of the Purpose of, and Statutory Basis for, the Proposed Rule Change

In its filing with the Commission, NASDAQ included statements concerning the purpose of, and basis for, the proposed rule change and discussed any comments it received on the proposed rule change. The text of those statements may be examined at the places specified in Item IV below. The Exchange has prepared summaries, set forth in sections A, B, and C below, of

[1] 15 U.S.C. 78s(b)(1).

[2] 17 CFR 240.19b–4.

the most significant parts of such statements.

A. Self-Regulatory Organization's Statement of the Purpose of, and Statutory Basis for, the Proposed Rule Change

1. Purpose

NASDAQ is proposing to amend Rule 7014(d), which provides the qualification criteria for designation as a Qualified Market Maker (''QMM'') under the QMM incentive program, to limit qualification to registered NASDAQ market makers (''Market Makers''). Currently, a QMM may be, but is not required to be, a Market Maker in any security.[3] The QMM program provides incentives to a member firm to make a significant contribution to market quality by providing liquidity at the NBBO in a large number of stocks for a significant portion of the day. In addition, the member must avoid imposing the burdens on NASDAQ and its market participants that may be associated with excessive rates of entry of orders away from the inside and/or order cancellation. The Exchange notes that the program, to date, has been used very little by member firms that are not Market Makers, and only Market Makers use the program at this time. Accordingly, the Exchange is proposing to amend Rule 7014(d)(3) to limit the program to Market Makers. The Exchange is also deleting the current qualification criteria under Rule 7014(d)(3) that requires a member firm to have liquidity provided in all securities through one of its NASDAQ Market Center MPIDs that represent 0.30% of Consolidated Volume during the month. The Exchange notes that the Consolidated Volume requirement is superfluous given that it is adopting Consolidated Volume eligibility criteria for the credits under the QMM program, and is adding an absolute Consolidated Volume eligibility criteria to receive the reduced removal rate under the program, as discussed below.

NASDAQ is amending Rule 7014(e), which sets forth the criteria required to receive the benefits of the program, to move the two credits provided under subparagraphs (1) and (2) provided for executions in securities listed on NYSE (''Tape A'') and securities listed on exchanges other than NASDAQ and NYSE (''Tape B'') to a table format directly under Rule 7014(e). NASDAQ is also modifying the criteria a QMM must meet to receive the two tiers of credits under the rule. Currently, NASDAQ provides a rebate of $0.0002 per share executed (in addition to other credits received under Rule 7018(a)) with respect to orders that are executed at a price of $1 or more and (A) displayed a quantity of at least one round lot at the time of execution; (B) either established the NBBO or was the first order posted on NASDAQ that had the same price as an order posted at another trading center with a protected quotation that established the NBBO; (C) were entered through a QMM MPID; (D) were for securities listed on NYSE or securities listed on exchanges other than NASDAQ and NYSE and (E) that no additional rebate will be issued with respect to Designated Retail Orders (as defined in Rule 7018). NASDAQ is proposing to replace these requirements with a new requirement that a QMM execute shares of liquidity provided in all securities through one or more of its NASDAQ Market Center MPIDs that represent greater than 0.90% of Consolidated Volume during the month. The Exchange is replacing the current requirements, which provide the QMM with an incentive to provide displayed liquidity that sets the NBBO on NASDAQ, with a new requirement to provide a significant level Consolidated Volume in all securities through one or more of its MPIDs. Consolidated Volume is defined by Rule 7018(a) as the total consolidated volume reported to all consolidated transaction reporting plans by all exchanges and trade reporting facilities during a month in equity securities, excluding executed orders with a size of less than one round lot.[4] The Exchange believes that tying the rebate to the provision of greater overall volume will provide an increased impact to improving market quality over the current NBBO-based criteria.

Similarly, the Exchange is proposing to modify the requirements to receive a rebate of $0.0001 per share executed under Rule 7014(e)(2). Currently, a QMM will receive the rebate with respect to all other displayed orders (other than Designated Retail Orders, as defined in Rule 7018) in securities priced at $1 or more per share that provide liquidity that are entered through a QMM MPID in Tape A or B securities. The Exchange is proposing to now require that a QMM execute shares of liquidity provided in all securities through one or more of its Nasdaq Market Center MPIDs that represent from 0.70% up to and including 0.90% of Consolidated Volume during the month. The Exchange believes that tying the rebate to the provision of greater overall volume will provide an increased impact to improving market quality over the current requirement that the orders are displayed and provide liquidity.

As a consequence of moving and modifying the criteria of Rules 7014(e)(1) and (2), NASDAQ is moving certain rule text concerning the type of securities that the rule applies to, and certain exclusions from the program, from subparagraphs (1) and (2) to the first paragraph of Rule 7014(e). As noted above, NASDAQ is placing the two credits provided under subparagraphs (1) and (2) in a table format and, consequently, is deleting those subparagraphs. NASDAQ is moving language, which is repeated in both subparagraphs, that notes the credits provided apply to securities priced at $1 or more per share to the new table under Rule 7014(e) where the two credits are now located. The Exchange is also moving text that concerns exclusion of Designated Retail Orders from subparagraphs (1) and (2) to directly above the new table under Rule 7014(e).

NASDAQ is proposing to amend the criteria under Rule 7014(e)(3) required to receive the reduced remove rate fee of $0.00295 per share executed under the rule in Tape A and B securities priced at $1 or more for shares executed via its QMM MPID. Currently, NASDAQ will charge a fee of $0.0030 per share executed for orders in securities listed on NASDAQ (''Tape C'') priced at $1 or more per share that access liquidity on the NASDAQ Market Center and that are entered through a QMM MPID, and charges a fee of $0.00295 per share executed for orders in Tape A or B securities priced at $1 or more per share that access liquidity on the NASDAQ Market Center and that are entered through a QMM MPID; provided, however, that after the first month in which an MPID becomes a QMM MPID, the QMM's volume of liquidity added, provided, and/or routed through the QMM MPID during the month (as a percentage of Consolidated Volume) must not be less than 0.05% lower than the volume of liquidity added, provided, and/or routed through such QMM MPID during the first month in which the MPID qualified as a QMM MPID (as a percentage of Consolidated Volume). NASDAQ is proposing to eliminate the current Consolidated Volume requirement, which relates to

[3] Thus, the QMM designation does not by itself impose a two-sided quotation obligation or convey any of the benefits associated with being a registered market maker.

[4] For purposes of calculating Consolidated Volume and the extent of a member's trading activity, expressed as a percentage of or ratio to Consolidated Volume, the date of the annual reconstitution of the Russell Investments Indexes shall be excluded from both total Consolidated Volume and the member's trading activity.

the first month in which an MPID qualified as a QMM MPID, and now require that the QMM executes shares of liquidity provided in all securities through one or more of its NASDAQ Market Center MPIDs of 0.80% or more of Consolidated Volume during the month. The Exchange believes that the changes will tie receipt of the reduced removal fee in Tape A and B securities to a more meaningful measure of market-improvement. Decoupling the measure from the QMM's first month QMM Consolidated Volume will ensure that all QMMs meet a minimum standard that is uniform. Increasing the Consolidated Volume required to receive the fee will provide incentive to QMMs to provide greater market-improving participation in return for the benefit.

The Exchange is also proposing to increase the level of Consolidated Volume that a member firm must have in Market-on-Close and/or Limit-on-Close orders during the month in order to qualify for fees to remove liquidity in securities executed at or above $1 under Rule 7018(a)(1), (2) and (3). Currently, NASDAQ assesses a fee for member firms that qualify based on their Market-on-Close and/or Limit-on-Close order participation in the Closing Cross of $0.0030 per share executed in Tape C securities under Rule 7018(a)(1), and fees of $0.00295 per share executed in Tape A and B securities under Rules 7018(a)(2) and (3), respectively. To qualify under each of the rules, a member firm must have Market-on-Close and/or Limit-on-Close orders executed in the NASDAQ Closing Cross, entered through a single NASDAQ Market Center market participant identifier, that represent more than 0.06% of Consolidated Volume during the month. The Exchange is proposing to increase the minimum level of Consolidated Volume required under each of the rules to 0.15%.

2. Statutory Basis

NASDAQ believes that the proposed rule change is consistent with the provisions of Section 6 of the Act,[5] in general, and with Sections 6(b)(4) and 6(b)(5) of the Act,[6] in particular, in that it provides for the equitable allocation of reasonable dues, fees and other charges among members and issuers and other persons using any facility or system which NASDAQ operates or controls, and is not designed to permit unfair discrimination between customers, issuers, brokers, or dealers.

NASDAQ believes that the proposed changes to the QMM program in NASDAQ Rule 7014(d)(3) is [sic] reasonable and will not discriminate unfairly because they refine the program to focus on market participants who currently use the program. As discussed above, Market Makers have provided the vast majority of participation in the program and are currently the only market participant utilizing the program. Accordingly, restricting the program to Market Makers will not result in a material change in who participates in the program. Additionally, Market Makers have both obligations to the market and regulatory requirements that normally do not apply to other market participants. As such, the Exchange believes that providing additional incentives to Market Makers to provide liquidity for the benefit of all investors and other market participants is reasonable and not unfairly discriminatory. The proposed modifications to the QMM program recognize the benefits of increased Market Maker participation and the Exchange believes that this proposal will improve displayed liquidity, and thus the execution quality overall on the Exchange. Moreover, the Exchange believes that eliminating the current Consolidated Volume requirement is reasonable and not unfairly discriminatory because it will become superfluous in light of additional requirements based on Consolidated Volume that are also being proposed herein. For the same reasons noted above, limiting eligibility in the program to Market Makers and eliminating the Consolidated Volume requirement under Rule 7014(d)(3) is an equitable allocation of the fees and credits provided by the program. In this regard, no current participants in the program will be excluded from being eligible to participate after the proposed change is effective, and applying the current Consolidated Volume criteria will have no significance in light of the proposed changes to the specific fees and credits under the program.

The Exchange believes that the proposed changes to Rule 7014(e) are reasonable and not unfairly discriminatory because they impose stricter requirements on Market Makers to receive the benefits of the program, which will be applied uniformly to all Market Makers that are eligible to participate in the QMM program. With regard to the $0.0002 rebate provided in Tape A and B securities, the Exchange is eliminating the NBBO-based criteria and tying the rebate to greater overall volume, which the Exchange believes will provide a greater impact to improving overall market quality because the economic benefits provided to the Market Maker are more certain and therefore provide the Market Maker a means to more aggressively provide displayed liquidity to the Exchange for the benefit of all market participants. In this regard, the Exchange notes that Market Makers must provide more than 0.90% of Consolidated Volume during the month, which is a significant level participation in the market. Similarly, NASDAQ is proposing a significant level of Consolidated Volume to receive the $0.0001 rebate under the rule, which currently only requires that the QMM participant provide displayed liquidity. The Exchange believes that it is reasonable and not unfairly discriminatory to impose stricter criteria designed to improve market quality in return for the credit NASDAQ elects to provide. NASDAQ also believes that the proposed changes to the eligibility requirements for the reduced removal fee in Tape A and B securities of $0.00295 per share executed are reasonable and not unfairly discriminatory because they increase the level of Consolidated Volume required, which will be an absolute requirement and not tied to historical levels of Consolidated Volume, thereby increasing the level of market improvement necessary to receive the reduced rate. As an absolute requirement, the Consolidated Volume requirement will apply uniformly to all Market Makers eligible to participate in the program. The Exchange believes that the proposed changes to the eligibility requirements under Rule 7014(e) are an equitable allocation because NASDAQ will provide the same rebates and fees to all Market Makers that qualify under the rule.

Lastly, NASDAQ notes that Market Makers serve an important role on the Exchange with regard to order interaction and provide continuous, passive liquidity in the marketplace. Additionally, Market Makers incur costs unlike the majority of other market participants including, but not limited to, their own infrastructure and other technology costs associated with market making activities. Consequently, the proposed differentiation between Market Makers and other market participants recognizes the differing contributions made to the quality of the market on the Exchange by Market Makers and the heightened regulatory requirements and costs associated with being a Market Maker. In brief, the Exchange believes that the proposed changes to the QMM program further

[5] 15 U.S.C. 78f.

[6] 15 U.S.C. 78f(b)(4) and (5).

incentives registered Market Makers to provide liquidity improves market qualify [sic], furthers the price discovery process and benefits investors.

The Exchange believes that the proposed changes to the level of Consolidated Volume in Market-on-Close and/or Limit-on-Close order participation in the Closing Cross required to receive the fees for orders that remove liquidity under Rules 7018(a)(1), (2), and (3) are reasonable and not unfairly discriminatory because they represent an increase in the level of market-improving Consolidated Volume contributed to the Closing Cross. NASDAQ provides discounted fees in Market-on-Close and/or Limit-on-Close orders in Tape A and B securities to provide incentives to member firms to provide liquidity in the closing process. NASDAQ is increasing the Consolidated Volume requirement to better align the discounted remove fees with members that use the closing cross process more regulatory [sic] over alternatives and also access liquidity more frequently on the Exchange as opposed to other members. Nonetheless, NASDAQ believes that it is reasonable and not unfairly discriminatory to change the eligibility criteria so that it mirrors the eligibility criteria of the related fees under Rules 7018(a)(2) and (3). Lastly, the Exchange believes that the proposed changes to the rules are an equitable allocation of the fees because the fee is provided uniformly to all member firms that qualify for the fees and all member firms have an equal opportunity to earn the discounted fee for accessing liquidity.

B. Self-Regulatory Organization's Statement on Burden on Competition

NASDAQ does not believe that the proposed rule changes will result in any burden on competition that is not necessary or appropriate in furtherance of the purposes of the Act, as amended.[7] NASDAQ notes that it operates in a highly competitive market in which market participants can readily favor competing venues if they deem fee levels at a particular venue to be excessive, or rebate opportunities available at other venues to be more favorable. In such an environment, NASDAQ must continually adjust its fees to remain competitive with other exchanges and with alternative trading systems that have been exempted from compliance with the statutory standards applicable to exchanges. Because competitors are free to modify their own fees in response, and because market participants may readily adjust their order routing practices, NASDAQ believes that the degree to which fee changes in this market may impose any burden on competition is extremely limited or even non-existent. In this instance, the changes to eligibility criteria required to receive credits and reduced fees under the QMM program do not impose a burden on competition because the incentive program remains in place, still offers economically advantageous credits and reduced fees, and is reflective of the need for exchanges to offer, and to let, the financial incentives to attract order flow evolve. While the Exchange does not believe that the proposed changes to the QMM program will result in any burden on competition, if the changes proposed herein are unattractive to market participants it is likely that NASDAQ will lose market share as a result. Similarly, the proposed changes to the eligibility criteria for remove fees under Rule 7018(a) based on Market-on-Close and/or Limit-on-Close order participation in the Closing Cross are designed to increase participation in the Closing Cross by setting the minimum level of Consolidated Volume eligibility criteria higher, thereby improving the market at the market close. To the extent the qualification criteria is too onerous or unattractive to market participants, NASDAQ will likely lose order flow and participation in the Closing Cross as a result.

C. Self-Regulatory Organization's Statement on Comments on the Proposed Rule Change Received From Members, Participants, or Others

Written comments were neither solicited nor received.

III. Date of Effectiveness of the Proposed Rule Change and Timing for Commission Action

The foregoing rule change has become effective pursuant to Section 19(b)(3)(A)(ii) of the Act.[8] At any time within 60 days of the filing of the proposed rule change, the Commission summarily may temporarily suspend such rule change if it appears to the Commission that such action is necessary or appropriate in the public interest, for the protection of investors, or otherwise in furtherance of the purposes of the Act. If the Commission takes such action, the Commission shall institute proceedings to determine whether the proposed rule should be approved or disapproved.

IV. Solicitation of Comments

Interested persons are invited to submit written data, views, and arguments concerning the foregoing, including whether the proposed rule change is consistent with the Act. Comments may be submitted by any of the following methods:

Electronic Comments

- Use the Commission's Internet comment form (*http://www.sec.gov/rules/sro.shtml*); or
- Send an email to *rule-comments@sec.gov.* Please include File Number SR–NASDAQ–2015–032 on the subject line.

Paper Comments

- Send paper comments in triplicate to Brent J. Fields, Secretary, Securities and Exchange Commission, 100 F Street NE., Washington, DC 20549–1090.

All submissions should refer to File Number SR–NASDAQ–2015–032. This file number should be included on the subject line if email is used. To help the Commission process and review your comments more efficiently, please use only one method. The Commission will post all comments on the Commission's Internet Web site (*http://www.sec.gov/rules/sro.shtml*). Copies of the submission, all subsequent amendments, all written statements with respect to the proposed rule change that are filed with the Commission, and all written communications relating to the proposed rule change between the Commission and any person, other than those that may be withheld from the public in accordance with the provisions of 5 U.S.C. 552, will be available for Web site viewing and printing in the Commission's Public Reference Room, 100 F Street NE., Washington, DC 20549 on official business days between the hours of 10 a.m. and 3 p.m. Copies of such filing also will be available for inspection and copying at the principal office of the Exchange. All comments received will be posted without change; the Commission does not edit personal identifying information from submissions. You should submit only information that you wish to make available publicly. All submissions should refer to File Number SR–NASDAQ–2015–032, and should be submitted on or before May 8, 2015.

[7] 15 U.S.C. 78f(b)(8).

[8] 15 U.S.C. 78s(b)(3)(A)(ii).

For the Commission, by the Division of Trading and Markets, pursuant to delegated authority.[9]

Brent J. Fields,

Secretary.

[FR Doc. 2015–08941 Filed 4–17–15; 8:45 am]

BILLING CODE 8011–01–P

SECURITIES AND EXCHANGE COMMISSION

[Release No. 34–74723; File No. SR–BYX–2015–22]

Self-Regulatory Organizations; BATS Y-Exchange, Inc.; Notice of Filing and Immediate Effectiveness of a Proposed Rule Change To Amend the Content of the BATS One Feed Under Rule 11.22(i) To Include Consolidated Volume for All Listed Equity Securities

April 14, 2015.

Pursuant to Section 19(b)(1) of the Securities Exchange Act of 1934 (the ''Act''),[1] and Rule 19b–4 thereunder,[2] notice is hereby given that on April 1, 2015, BATS Y-Exchange, Inc. (the ''Exchange'' or ''BYX'') filed with the Securities and Exchange Commission (''Commission'') the proposed rule change as described in Items I and II below, which Items have been prepared by the Exchange. The Exchange has designated this proposal as a ''non-controversial'' proposed rule change pursuant to Section 19(b)(3)(A) of the Act[3] and Rule 19b–4(f)(6)(iii) thereunder,[4] which renders it effective upon filing with the Commission. The Commission is publishing this notice to solicit comments on the proposed rule change from interested persons.

I. Self-Regulatory Organization's Statement of the Terms of the Substance of the Proposed Rule Change

The Exchange amend [sic] the content of the BATS One Feed under Rule 11.22(i) to include consolidated volume for all listed equity securities. The text of the proposed rule change is available at the Exchange's Web site at *www.batstrading.com,* at the principal office of the Exchange, and at the Commission's Public Reference Room.

II. Self-Regulatory Organization's Statement of the Purpose of, and Statutory Basis for, the Proposed Rule Change

In its filing with the Commission, the Exchange included statements concerning the purpose of and basis for the proposed rule change and discussed any comments it received on the proposed rule change. The text of these statements may be examined at the places specified in Item IV below. The Exchange has prepared summaries, set forth in Sections A, B, and C below, of the most significant parts of such statements.

A. Self-Regulatory Organization's Statement of the Purpose of, and Statutory Basis for, the Proposed Rule Change

1. Purpose

The Exchange proposes to amend the content of the BATS One Feed under Rule 11.22(i) to include consolidated volume for all listed equity securities. The Exchange also proposes to make a ministerial change to Rule 11.22(i). The Commission recently approved a proposed rule change by the Exchange to establish a new market data product called the BATS One Feed.[5] The BATS One Feed is a data feed that disseminates, on a real-time basis, the aggregate best bid and offer (''BBO'') of all displayed orders for securities traded on BYX and its affiliated exchanges[6] and for which the BATS Exchanges reports quotes under the Consolidated Tape Association (''CTA'') Plan or the Nasdaq/UTP Plan.[7]

Consolidated Volume

The last sale information disseminated as part of the BATS One Feed includes the price, size, time of execution, and individual BATS Exchange on which the trade was executed. The last sale information also includes the cumulative number of shares executed on all BATS Exchanges for that trading day.[8] The Exchange now proposes to expand the last sale information to include consolidated volume for all listed equity securities regardless of where the transaction was executed. The Exchange would obtain the consolidated volume directly from the securities information processors and then distribute in a manner consistent with the requirements for redistributing such data as set forth in the CTA Plan and Nasdaq UTP Plan.[9]

Ministerial Change

The Exchange also proposes to delete from Rule 11.22(i) language indicating that the Retail Liquidity Identifier is disseminated on behalf of the Exchange, ''an affiliated exchange of the Exchange''. The Retail Liquidity Identifier indicator message is disseminated via the BATS One Feed on behalf of the Exchange pursuant to the Exchange's Retail Price Improvement (''RPI'') Program.[10] For purposes of BYX Rule 11.22(i), the Exchange believes it is unnecessary to include the phrase ''an affiliated exchange of the Exchange'' and could lead to potential investor confusion.

2. Statutory Basis

The Exchange believes that its proposal is consistent with Section 6(b)

[9] 17 CFR 200.30–3(a)(12).

[1] 15 U.S.C. 78s(b)(1).

[2] 17 CFR 240.19b–4.

[3] 15 U.S.C. 78s(b)(3)(A).

[4] 17 CFR 240.19b–4(f)(6)(iii).

[5] *See* Securities Exchange Act Release No. 73918 (December 23, 2014), 79 FR 78920 (December 31, 2014) (File Nos. SR–EDGX–2014–25; SR–EDGA–2014–25; SR–BATS–2014–055; SR–BYX–2014–030) (Notice of Amendments No. 2 and Order Granting Accelerated Approval to Proposed Rule Changes, as Modified by Amendments Nos. 1 and 2, to Establish a New Market Data Product called the BATS One Feed) (''BATS One Approval Order'').

[6] BYX's affiliated exchanges are the BATS Exchange, Inc. (''BZX''), the EDGA Exchange, Inc. (''EDGA''), and the EDGX Exchange, Inc. (''EDGX'', together with EDGA, BZX, and BYX, the ''BATS Exchanges''). On January 23, 2014, BATS Global Markets, Inc. (''BGMI''), the former parent company of the Exchange and BZX, completed its business combination with Direct Edge Holdings LLC, the parent company of EDGA and EDGX. *See* Securities Exchange Act Release No. 71375 (January 23, 2014), 79 FR 4771 (January 29, 2014) (SR–BATS–2013–059; SR–BYX–2013–039). Upon completion of the business combination, DE Holdings and BGMI each became intermediate holding companies, held under a single new holding company. The new holding company, formerly named ''BATS Global Markets Holdings, Inc.,'' changed its name to ''BATS Global Markets, Inc.'' and BGMI changed its name to ''BATS Global Markets Holdings, Inc.''

[7] The Exchange understands that each of the BATS Exchanges will separately file substantially similar proposed rule changes with the Commission to implement fees for the BATS One Feed.

[8] The BATS One Feed also contains optional functionality which enables recipients to receive aggregated two-sided quotations from the BATS Exchanges for up to five (5) price levels for all securities that are traded on the BATS Exchanges in addition to the BATS One Summary Feed (''BATS One Premium Feed''). For each price level on one of the BATS Exchanges, the BATS One Premium Feed includes a two-sided quote and the number of shares available to buy and sell at that particular price level.

[9] *See* CTA Consolidated Volume Display Policy *available at https://www.ctaplan.com* (dated March 2015). The CTA Consolidated Volume Display Policy requires that, ''[i]f a Customer calculates the CTA Consolidated Volume and displays that alongside last sale prices or bid-asked quotes that are not consolidated prices or quotes under the CTA Plan or the CQ Plan, then the Customer must incorporate into its display the following statement: ''Realtime quote and/or trade prices are not sourced from all markets.'' Customer must also assure that any person included in the redistribution chain starting with the Customer conspicuously places such a statement in any such display that it provides.'' *Id.*

[10] For a description of BYX's RPI Program, *see* BYX Rule 11.24. *See also* Securities Exchange Act Release No. 68303 (November 27, 2012), 77 FR 71652 (December 3, 2012) (SR–BYX–2012–019) (Order Granting Approval of Proposed Rule Change, as Modified by Amendment No. 2, to Adopt a Retail Price Improvement Program); Securities Exchange Act Release No. 67734 (August 27, 2012), 77 FR 53242 (August 31, 2012) (SR–BYX–2012–019) (Notice of Filing of Proposed Rule Change to Adopt a Retail Price Improvement Program).

of the Act [11] in general, and furthers the objectives of Section 6(b)(5) of the Act [12] in particular, in that it is designed to promote just and equitable principles of trade, to foster cooperation and coordination with persons engaged in facilitating transactions in securities, to remove impediments to and perfect the mechanism of a free and open market and a national market system and, in general, to protect investors and the public interest. The Exchange also believes that the proposed rule change is consistent with Section 11(A) of the Act [13] in that it supports (i) fair competition among brokers and dealers, among exchange markets, and between exchange markets and markets other than exchange markets and (ii) the availability to brokers, dealers, and investors of information with respect to quotations for and transactions in securities. Furthermore, the proposed rule change is consistent with Rule 603 of Regulation NMS,[14] which provides that any national securities exchange that distributes information with respect to quotations for or transactions in an NMS stock do so on terms that are not unreasonably discriminatory. In adopting Regulation NMS, the Commission granted self-regulatory organizations and broker-dealers increased authority and flexibility to offer new and unique market data products to the public. It was believed that this authority would expand the amount of data available to consumers, and also spur innovation and competition for the provision of market data.

The proposed rule change is designed to promote just and equitable principles of trade and remove impediments to and perfect the mechanism of a free and open market and a national market system by providing for the broader dissemination of consolidated volume to investors. The Exchange also believes this proposal is consistent with Section 6(b)(5) of the Act because it protects investors and the public interest and promotes just and equitable principles of trade by providing investors with new options for receiving consolidated volume. The Exchange also believes that the proposed rule change is reasonable because consolidated volume is currently included in a competing market data products offered by the NYSE and Nasdaq.[15] Therefore, the Exchange believes the proposed rule change removes impediments to and perfects the mechanism of a free and open market and a national market system, and, in general, protects investors and the public interest. The proposal would not permit unfair discrimination because the consolidated volume will be available to all of the Exchange's customers and market data vendors on an equivalent basis. In addition, any customer that wishes to receive consolidated volume via a different source will be able to do so.

The Exchange believes that the ministerial change to Rule 11.22(i) is reasonable because it is intended to make the description of the BATS One Feed clearer and less confusing for investors and eliminate potential investor confusion, thereby removing impediments to and perfecting the mechanism of a free and open market and a national market system, and, in general, protecting investors and the public interest.

B. Self-Regulatory Organization's Statement on Burden on Competition

The Exchange does not believe that the proposal will impose any burden on competition not necessary or appropriate in furtherance of the purposes of the Act. The Exchange believes that the proposed rule change will enhance competition because it would enable the Exchange to include consolidated volume as part of the BATS One Feed, thereby enabling it to better compete with similar market data products currently offered by the NYSE and Nasdaq that include such volume.[16]

Although the BATS Exchanges are the exclusive distributors of the individual data feeds from which certain data elements would be taken to create the BATS One Feed, the Exchange is not the exclusive distributor of the consolidated volume that would be included in the BATS One Feed. A vendor seeking to offer a similar product and include consolidated volume would be able to do so on the same terms as the Exchange from a cost perspective. As discussed in in the BATS One Approval Order,[17] any entity may separately purchase the individual underlying products, and if they so choose, perform a similar aggregation and consolidation function that the Exchange performs in creating the BATS One Feed, and offer a data feed with the same information included in the BATS One Feed to sell and distribute it to its clients with no greater cost than the Exchange. Likewise, a competing vendor could also receive consolidated volume from the securities information processors and include it as part of their product to be disseminated to their customers under the same terms and policies provided to the Exchange.[18] Therefore, the Exchange believes the inclusion of consolidated volume in the BATS One Feed would not impose any burden on competition not necessary or appropriate in furtherance of the purposes of the Act.

Finally, the Exchange believes that the ministerial change to Rule 11.22(i) will not affect competition because it does not amend the content of the BATS One Feed (other than as described above). Rather, it is simply intended to make the description of the BATS One Feed clearer and less confusing.

C. Self-Regulatory Organization's Statement on Comments on the Proposed Rule Change Received From Members, Participants, or Others

The Exchange has neither solicited nor received written comments on the proposed rule change.

III. Date of Effectiveness of the Proposed Rule Change and Timing for Commission Action

Because the proposed rule change does not (i) significantly affect the protection of investors or the public interest; (ii) impose any significant burden on competition; and (iii) become operative for 30 days from the date on which it was filed, or such shorter time as the Commission may designate if consistent with the protection of investors and the public interest, the proposed rule change has become effective pursuant to Section 19(b)(3)(A)

[11] 15 U.S.C. 78f(b).

[12] 15 U.S.C. 78f(b)(5).

[13] 15 U.S.C. 78k–1.

[14] *See* 17 CFR 242.603.

[15] *See* Securities Exchange Act Release No. 73553 (November 6, 2014), 79 FR 67491 (November 13, 2014) (SR–NYSE–2014–40) (Notice of Amendment No. 1 and Order Granting Accelerated Approval to a Proposed Rule Change, as Modified by Amendment No.1, To Establish the NYSE Best Quote & Trades (''BQT'') Data Feed); *http://www.nyxdata.com/Data-Products/NYSE-Best-Quote-and-Trades* (last visited May 27, 2014) (data feed providing unified view of BBO and last sale information for the NYSE, NYSE Arca, and NYSE MKT) (''NYSE BQT Approval Order''). *See also* Nasdaq Basic, *http://www.nasdaqtrader.com/Trader.aspx?id=nasdaqbasic* (last visited March 26, 2015) (data feed offering the BBO and Last Sale information for all U.S. exchange-listed securities based on liquidity within the Nasdaq market center, as well as trades reported to the FINRA/Nasdaq Trade Reporting Facility (''TRF'')); *and* Nasdaq NLS Plus, *http://www.nasdaqtrader.com/Trader.aspx?id=NLSplus* (last visited July 8, 2014) (data feed providing last sale data as well as consolidated volume from the following Nasdaq OMX markets for U.S. exchange-listed securities: Nasdaq, FINRA/Nasdaq TRF, Nasdaq OMX BX, and Nasdaq OMX PSX).

[16] *See id.* (noting that NYSE BQT and NLS Plus carry consolidated volume for all listed equities).

[17] *See* BATS One Approval Order, *supra* note 5.

[18] *See* CTA Consolidated Volume Display Policy, *supra* note 9.

of the Act [19] and Rule 19b–4(f)(6)(iii) thereunder.[20]

A proposed rule change filed pursuant to Rule 19b–4(f)(6) under the Act [21] normally does not become operative for 30 days after the date of its filing. However, Rule 19b–4(f)(6)(iii) [22] permits the Commission to designate a shorter time if such action is consistent with the protection of investors and the public interest. The Exchange has asked the Commission to waive the 30-day operative delay so that the proposal may become operative immediately upon filing. The Exchange believes that waiving the 30-day operative delay is consistent with the protection of investors and the public interest because it would allow the Exchange to timely offer investors a new option for receiving consolidated volume information. The Exchange further notes that other exchanges currently offer similar data products that include consolidated volume.[23] The Commission believes that waiving the 30-day operative delay is consistent with the protection of investors and the public interest. Therefore, the Commission hereby waives the operative delay and designates the proposed rule change operative upon filing.[24]

At any time within 60 days of the filing of the proposed rule change, the Commission summarily may temporarily suspend such rule change if it appears to the Commission that such action is necessary or appropriate in the public interest, for the protection of investors, or otherwise in furtherance of the purposes of the Act. If the Commission takes such action, the Commission shall institute proceedings to determine whether the proposed rule should be approved or disapproved.

IV. Solicitation of Comments

Interested persons are invited to submit written data, views, and arguments concerning the foregoing, including whether the proposed rule change is consistent with the Act.

[19] 15 U.S.C. 78s(b)(3)(A).

[20] 17 CFR 240.19b–4(f)(6)(iii). As required under Rule 19b–4(f)(6)(iii), the Exchange provided the Commission with written notice of its intent to file the proposed rule change, along with a brief description and the text of the proposed rule change, at least five business days prior to the date of filing of the proposed rule change, or such shorter time as designated by the Commission.

[21] 17 CFR 240.19b–4(f)(6).

[22] 17 CFR 240.19b–4(f)(6)(iii).

[23] *See supra* note 15 (noting that NYSE BQT and NLS Plus carry consolidated volume for all listed equities).

[24] For purposes only of waiving the 30-day operative delay, the Commission has considered the proposed rule's impact on efficiency, competition, and capital formation. *See* 15 U.S.C. 78c(f).

Comments may be submitted by any of the following methods:

Electronic Comments

- Use the Commission's Internet comment form (*http://www.sec.gov/rules/sro.shtml*); or
- Send an email to *rule-comments@sec.gov.* Please include File Number SR–BYX–2015–22 on the subject line.

Paper Comments

- Send paper comments in triplicate to Brent J. Fields, Secretary, Securities and Exchange Commission, 100 F Street NE., Washington, DC 20549–1090.

All submissions should refer to File Number SR–BYX–2015–22. This file number should be included on the subject line if email is used. To help the Commission process and review your comments more efficiently, please use only one method. The Commission will post all comments on the Commission's Internet Web site (*http://www.sec.gov/rules/sro.shtml*). Copies of the submission, all subsequent amendments, all written statements with respect to the proposed rule change that are filed with the Commission, and all written communications relating to the proposed rule change between the Commission and any person, other than those that may be withheld from the public in accordance with the provisions of 5 U.S.C. 552, will be available for Web site viewing and printing in the Commission's Public Reference Room, 100 F Street NE., Washington, DC 20549 on official business days between the hours of 10 a.m. and 3 p.m. Copies of such filing also will be available for inspection and copying at the principal office of the Exchange. All comments received will be posted without change; the Commission does not edit personal identifying information from submissions. You should submit only information that you wish to make available publicly. All submissions should refer to File Number SR–BYX–2015–22, and should be submitted on or before May 11, 2015.

For the Commission, by the Division of Trading and Markets, pursuant to delegated authority.[25]

Brent J. Fields,

Secretary.

[FR Doc. 2015–08939 Filed 4–17–15; 8:45 am]

BILLING CODE 8011–01–P

[25] 17 CFR 200.30–3(a)(12).

SECURITIES AND EXCHANGE COMMISSION

Proposed Collection; Comment Request

Upon Written Request Copies Available From: Securities and Exchange Commission, Office of FOIA Services, 100 F Street NE., Washington, DC 20549–2736.

Extension:

Rule 239. SEC File No. 270–638, OMB Control No. 3235–0687.

Notice is hereby given that, pursuant to the Paperwork Reduction Act of 1995 (44 U.S.C. 3501 *et seq.*), the Securities and Exchange Commission (''Commission'') is soliciting comments on the collection of information summarized below. The Commission plans to submit this existing collection of information to the Office of Management and Budget for extension and approval.

Rule 239 (17 CFR 230.239) provides exemptions under the Securities Act of 1933 (15 U.S.C. 77a *et seq.*), the Securities Exchange Act of 1934 (15 U.S.C. 78a *et seq.*) and the Trust Indenture Act of 1939 (U.S.C. 77aaa *et seq.*) for security-based swaps issued by certain clearing agencies satisfying certain conditions. The purpose of the information required by Rule 239 is to make certain information about security-based swaps that may be cleared by the registered or the exempt clearing agencies available to eligible contract participants and other market participants. We estimate that each registered or exempt clearing agency issuing security-based swaps in its function as a central counterparty will spend approximately 2 hours each time it provides or update the information in its agreements relating to security-based swaps or on its Web site. We estimate that each registered or exempt clearing agency will provide or update the information approximately 20 times per year. In addition, we estimate that 75% of the 2 hours per response (1.5 hours) is prepared internally by the clearing agency for a total annual reporting burden of 180 hours (1.5 hours per response × 20 times × 6 respondents).

Written comments are invited on: (a) Whether the proposed collection of information is necessary for the proper performance of the functions of the agency, including whether the information will have practical utility; (b) the accuracy of the agency's estimate of the burden imposed by the collection of information; (c) ways to enhance the quality, utility, and clarity of the information collected; and (d) ways to minimize the burden of the collection of

information on respondents, including through the use of automated collection techniques or other forms of information technology. Consideration will be given to comments and suggestions submitted in writing within 60 days of this publication.

An agency may not conduct or sponsor, and a person is not required to respond to, a collection of information unless it displays a currently valid control number.

Please direct your written comment to Pamela Dyson, Director/Chief Information Officer, Securities and Exchange Commission, c/o Remi Pavlik-Simon, 100 F Street NE., Washington, DC 20549 or send an email to: *PRA_Mailbox@sec.gov.*

April 15, 2015.

Brent J. Fields,

Secretary.

[FR Doc. 2015–08993 Filed 4–17–15; 8:45 am]

BILLING CODE 8011–01–P

SECURITIES AND EXCHANGE COMMISSION

Proposed Collection; Comment Request

Upon Written Request, Copy Available From: Securities and Exchange Commission, Office of FOIA Services, 100 F Street NE., Washington, DC 20549–2736.

Extension:

Form N–5, SEC File No. 270–172, OMB Control No. 3235–0169.

Notice is hereby given that, pursuant to the Paperwork Reduction Act of 1995 (44 U.S.C. 3501 *et seq.*), the Securities and Exchange Commission (the ''Commission'') is soliciting comments on the collection of information summarized below. The Commission plans to submit this existing collection of information to the Office of Management and Budget (''OMB'') for extension and approval.

Form N–5 (17 CFR 239.24 and 274.5) is the form used by small business investment companies (''SBICs'') to register their securities under the Securities Act of 1933 (15 U.S.C. 77a *et seq.*) (''Securities Act'') and the Investment Company Act of 1940 (15 U.S.C. 80a–1 *et seq.*) (''Investment Company Act''). Form N–5 is the registration statement form adopted by the Commission for use by an SBIC that has been licensed as such under the Small Business Investment Act of 1958 or which has received the preliminary approval of the Small Business Administration (''SBA'') and has been notified by the SBA that the company may submit a license application Form N–5 is an integrated registration form and may be used as the registration statement under both the Securities Act and the Investment Company Act. The purpose of Form N–5 is to meet the filing and disclosure requirements of both the Securities Act and Investment Company Act, and to provide investors with information sufficient to evaluate an investment in an SBIC. The information that is required to be filed with the Commission permits verification of compliance with securities law requirements and assures the public availability and dissemination of the information.

The Commission has received one filing on Form N–5 in the last three years, and we therefore estimate that SBICs will file about 0.333 filings on Form N–5 per year. The currently approved burden of Form N–5 is 352 hours per response. Therefore, the number of currently approved aggregate burden hours, when calculated using the current estimate for number of filings is about 117 hours per year. The currently approved cost burden of Form N–5 is $30,000 per filing. We continue to believe this estimate for Form N–5's cost burden is appropriate. Therefore, we estimate that the aggregate cost burden, when calculated using the Commission's estimate of 0.333 filings per year, is about $10,000 in external costs per year.

Estimates of average burden hours and costs are made solely for the purposes of the Paperwork Reduction Act, and are not derived from a comprehensive or even representative survey or study of the costs of Commission rules and forms. Compliance with the collection of information requirements of Form N–5 is mandatory. Responses to the collection of information will not be kept confidential. An agency may not conduct or sponsor, and a person is not required to respond to, a collection of information unless it displays a currently valid OMB control number.

Written comments are invited on: (a) Whether the collection of information is necessary for the proper performance of the functions of the Commission, including whether the information has practical utility; (b) the accuracy of the Commission's estimate of the burden of the collection of information; (c) ways to enhance the quality, utility, and clarity of the information collected; and (d) ways to minimize the burden of the collection of information on respondents, including through the use of automated collection techniques or other forms of information technology. Consideration will be given to comments and suggestions submitted in writing within 60 days of this publication.

Please direct your written comments to Pamela Dyson, Director/Chief Information Officer, Securities and Exchange Commission, c/o Remi Pavlik-Simon, 100 F Street NE., Washington, DC 20549; or send an email to: *PRA_Mailbox@sec.gov.*

April 15, 2015.

Brent J. Fields,

Secretary.

[FR Doc. 2015–08991 Filed 4–17–15; 8:45 am]

BILLING CODE 8011–01–P

SECURITIES AND EXCHANGE COMMISSION

[Release No. 34–74727; File No. SR–NYSEArca–2015–30]

Self-Regulatory Organizations; NYSE Arca, Inc.; Notice of Filing and Immediate Effectiveness of Proposed Rule Change Amending the NYSE Arca Options Fee Schedule

April 14, 2015.

Pursuant to Section 19(b)(1) [1] of the Securities Exchange Act of 1934 (the ''Act'') [2] and Rule 19b–4 thereunder,[3] notice is hereby given that on April 9, 2015, NYSE Arca, Inc. (''Exchange'' or ''NYSE Arca'') filed with the Securities and Exchange Commission (''Commission'') the proposed rule change as described in Items I, II and III below, which Items have been prepared by the self-regulatory organization. The Commission is publishing this notice to solicit comments on the proposed rule change from interested persons.

I. Self-Regulatory Organization's Statement of the Terms of Substance of the Proposed Rule Change

The Exchange proposes to amend the NYSE Arca Options Fee Schedule (''Fee Schedule'') in a number of different ways as described below. The Exchange proposes to implement the fee change effective April 9, 2015. The text of the proposed rule change is available on the Exchange's Web site at *www.nyse.com,* at the principal office of the Exchange, and at the Commission's Public Reference Room.

II. Self-Regulatory Organization's Statement of the Purpose of, and the Statutory Basis for, the Proposed Rule Change

In its filing with the Commission, the self-regulatory organization included

[1] 15 U.S.C. 78s(b)(1).

[2] 15 U.S.C. 78a.

[3] 17 CFR 240.19b–4.

statements concerning the purpose of, and basis for, the proposed rule change and discussed any comments it received on the proposed rule change. The text of those statements may be examined at the places specified in Item IV below. The Exchange has prepared summaries, set forth in sections A, B, and C below, of the most significant parts of such statements.

A. Self-Regulatory Organization's Statement of the Purpose of, and the Statutory Basis for, the Proposed Rule Change

1. Purpose

The Exchange proposes to amend the Fee Schedule in a number of different ways as described below. The Exchange proposes to implement the fee changes effective April 9, 2015.

Transaction Fees

The Exchange is proposing several changes to transaction fees. First, the Exchange proposes to establish certain fees for Professional Customer orders. The Exchange does not currently differentiate between Customer orders and Professional Customer orders, except for orders routing to away exchanges.[4] Because the Exchange recently adopted a Professional Customer definition,[5] the Exchange proposes to establish how Professional Customers would be charged for transactions on the Exchange. Regarding manual transactions, in the table setting forth ''Transaction Fee—Per Contract,'' the Exchange proposes to clarify that Professional Customer orders executed in open outcry will continue to be charged the same rates as Customers orders—*i.e.,* no charge will apply. To add clarity to the Fee Schedule, the Exchange proposes to rename the table ''Transaction Fee for Manual Transactions—Per Contract.''

Regarding Electronic executions, in the table setting forth ''Transaction Fee—Per Contract,'' the Exchange proposes to add ''Professional Customer'' as a participant type. To add clarity to the Fee Schedule, the Exchange proposes to rename the table ''Transaction Fee for Electronic Transactions—Per Contract.'' As discussed below, the Exchange proposes to charge Professional Customers the same proposed Take Liquidity rate as Firms and Broker Dealers, but enable Professional Customers to earn the same proposed Posting Credit for Posted Liquidity as Customers.

The Exchange is also proposing to increase the Take Liquidity Fees for Lead Market Makers (''LMM''s), NYSE Arca Market Makers (''MM''s), and Firm and Broker Dealer (''BD'') Electronic Executions. The Take Liquidity fees for LMM, MM, Firm and BD orders executed electronically in Penny Pilot Issues would be $0.50 per contract, up from $0.49. The Take Liquidity fees for LMM and MM orders executed electronically in Non Penny Pilot Issues would be $0.92 per contract, up from $0.87, while the Take Liquidity fees for Firm and BD orders executed electronically in Non Penny Pilot Issues would be $0.94 per contract, up from $0.89. As noted above, the Exchange is proposing to charge Professional Customers Take Liquidity Fees per contract equivalent to those charged to Firm and Broker Dealer orders: $0.50 in Penny Pilot issues, and $0.94 in Non Penny Pilot issues. Finally, the Exchange is proposing that Professional Customer orders entered and executed electronically would receive the same per contract credit for Post Liquidity as a Customer: $0.25 for Post Liquidity in Penny Pilot Issues and $0.75 for Post Liquidity in Non Penny Pilot Issues.

Customer Monthly Posting Credit Tiers for Penny Pilot Issues

The Exchange is proposing two changes to the Customer Monthly Posting Credit Tiers for Penny Pilot Issues, which currently has five tiers. First, the Exchange proposes to clarify that these credits apply to executions of Professional Customer orders. Second, the Exchange proposes to add a sixth tier. To clarify that these tiers apply to Professional Customer orders, the Exchange proposes to revise the table, including its title and headings, as well as the description of qualifying posted orders for each tier, to include reference to Professional Customers. With this change, the Exchange would clarify that the tiers apply to Professional Customers and Customers alike, and that volume from Professional Customer posted orders, together with Customer orders, would be included in the calculation of the qualifications.

The Exchange also proposes to add a sixth Tier (''Tier 6''). To qualify for proposed Tier 6, Order Flow Providers (''OFPs'') must achieve at least 1.00% of the Total Industry Customer equity and ETF option Average Daily Volume (''ADV'') from Customer and Professional Customer Posted Orders in all Issues, or, achieve at least 0.80% of the Total Industry Customer equity and ETF option Average Daily Volume (''ADV'') from Customer and Professional Customer Posted Orders in all issues and also executes an ADV of Retail Orders of 0.10% ADV of U.S. Equity market share posted and executed on the NYSE Arca Equity Market.[6] OFPs that meet either of the qualifications for Tier 6 would receive a credit of $0.50 per contract applied to posted electronic Customer and Professional Customer executions in Penny Pilot issues. The Exchange believes this proposed change would provide additional incentive to direct Customer (and Professional Customer) order flow to the Exchange, which benefits all market participants through increased liquidity and enhanced price discovery.

Customer Incentive Program

The Exchange is proposing two changes to the Customer Incentive Program, which provides four alternatives to earn credits. First, the Exchange proposes to clarify that this Program includes executions of Professional Customer orders in the calculation of executed Customer Posted orders and that all of the various incentive credits apply to both Customer and Professional Customer

[4] Where Professional Customer executions are not specifically delineated in the Fee Schedule, NYSE Arca will continue to treat such executions as Customer executions for fee purposes and the Exchange proposes to include this information in the Fee Schedule for additional clarity and transparency. *See* proposed Fee Schedule, NYSE Arca OPTIONS: TRADE-RELATED CHARGES FOR STANDARD OPTIONS (''*Unless Professional Customer executions are specifically delineated, such executions will be treated as Customer executions for fee purposes.*'').

[5] The Exchange recently added a Professional Customer definition to its rules. *See* Securities Exchange Act Release No. 73665 (November 21, 2014), 79 FR 70907 (November 28, 2014) (SR–NYSEArca–2014–133). With the filing, the Exchange did not alter its priority rules applicable to orders of Professional Customers, but the Exchange did reserve the right to ''differentiate between Professional Customer orders and other orders for purposes of priority or fees,'' in any subsequent rule proposals filed with the Commission. *See id.* at 70908, fn. 9.

[6] Endnote 8 sets forth additional detail regarding meeting the volume requirements of proposed Tier 6. *See* Fee Schedule, Endnote 8 (''The calculations for qualifications for monthly posting credits only include electronic executions, excluding Mini options contracts. Customer equity and ETF option ADV does not include Electronic Complex Order Executions or Mini options contracts executions. QCC orders are neither posted nor taken; thus QCC transactions are not included in the calculation of posted or taken execution volumes. Orders routed to another market for execution are not included in the calculation of taking volume. Total Industry Customer equity and ETF option ADV includes OCC calculated Customer volume of all types, including Complex Order Transactions, QCC transactions, and mini options transactions, in equity and ETF options. An affiliate of an OTP Holder or OTP Firm is as defined in NYSE Arca Rule 1.1(a). For purposes of calculating the executed Average Daily Volume (''ADV'') of Retail Orders of U.S. Equity Market Share on the NYSE Arca Equity Market, a Retail Order must qualify for the Retail Order Tier set forth in the Schedule of Fees and Charges for NYSE Arca Equities, Inc.''

Posting Credits. Second, the Exchange is proposing to increase two of the possible incentives from $0.02 to $0.03. Specifically, if an OFP meets a level of at least 0.75% of Total Industry Customer equity and ETF option ADV from Customer and Professional Customer Posted Orders in both Penny Pilot and non-Penny Pilot Issues, of which at least 0.28% of Total Industry Customer equity and ETF option ADV is from Customer and Professional Customer Posted Orders in non-Penny Pilot Issues, that OFP would qualify for an additional $0.03 credit on Customer and Professional Customer Posting Credits. As further proposed, if an OFP achieves and has executed ADV of Retail Orders of 0.10% of U.S. Equity market share posted and executed on the NYSE Arca Equity Market, that OFP would qualify for an additional $0.03 credit on Customer and Professional Customer Posting Credits. The Exchange believes this proposed change would provide additional incentive to direct Customer (and Professional Customer) order flow to the Exchange, which benefits all market participants through increased liquidity and enhanced price discovery.

Customer Posting Credit Tiers in Non Penny Pilot Issues

The Exchange is proposing several changes to these Posting Credit Tiers, which consist of Tier A and Tier B and provide for specified credits if specified volume thresholds have been met. First, consistent with the above changes, the Exchange is proposing to clarify that the Posting Credit Tiers would apply to executions of Professional Customer orders. In addition, the Exchange is proposing to adjust the Posting Credit Tiers to require higher levels of volume to qualify, and to increase the credit applied to posted electronic Customer and Professional Customer executions in non-Penny Pilot issues. Tier A would require an Order Flow Provider to meet a minimum of 0.80%, instead of 0.60%, of total industry Customer equity and ETF options ADV from Customer and Professional Customer Posted Orders in all issues, plus an executed ADV of Retail Orders of 0.1% ADV of U.S. Equity market share posted and executed on the NYSE Arca Equity Market to qualify for the credit. Tier B would require an Order Flow Provider to achieve at least 1.00%, instead of 0.95%, of total industry Customer equity and ETF options ADV from Customer and Professional Customer posted orders in both Penny Pilot and non-Penny Pilot issues. Qualifying under either criterion would result in a credit applied to posted electronic Customer and Professional Customer execution in non-Penny Pilot issues of $0.83 per contract instead of $0.80 or $0.81 per contract. The Exchange believes the proposed increases are offset by the increased credits and believes this proposed change would provide additional incentive to direct Customer (and Professional Customer) order flow to the Exchange, which benefits all market participants through increased liquidity and enhanced price discovery.

Take Liquidity Discount for Certain Market Participants

Finally, the Exchange is proposing a new fee, which would be a discount in Take Liquidity Fees for Professional Customer, Market Maker, Firm, and Broker Dealer Liquidity Removing orders for OTP Holders and OTP Firms (''OTPs'') that meet a volume qualification. As proposed, firms that provide at least 1.00% of total industry customer equity and ETF option ADV from Customer and Professional Customer posted orders in all issues and also at least 2.00% of total industry Customer equity and ETF option ADV from Professional Customer, Market Maker, Firm, and Broker Dealer liquidity removing orders in all issues would qualify for a discount in Take Liquidity Fees of $0.02 in Penny Pilot Issues, and $0.06 in non-Penny Pilot Issues. The Exchange believes this change would provide an incentive for OTPs to execute large volumes of orders on the Exchange, which benefits all market participants through increased liquidity and enhanced price discovery.

2. Statutory Basis

The Exchange believes that the proposed rule change is consistent with Section 6(b) of the Act,[7] in general, and furthers the objectives of Sections 6(b)(4) and (5) of the Act,[8] in particular, because it provides for the equitable allocation of reasonable dues, fees, and other charges among its members, issuers and other persons using its facilities and does not unfairly discriminate between customers, issuers, brokers or dealers.

The Exchange believes that the proposed delineation of how Professional Customer orders would be charged and treated for purposes of achieving and earning certain credits available on the Exchange is reasonable, equitable and not unfairly discriminatory because it adds clarity to the Fee Schedule, particularly in light of the Exchange's recent adoption of the Professional Customer definition in its rules.[9] Prior to this rule change, orders that qualify as Professional Customer orders were treated the same as Customer orders. Thus, where the Exchange proposes to clarify that Professional Customer volumes are included in the calculation for certain credits available, the clarification does not change the fact that orders now falling under the category of Professional Customer were previously included in these volumes.

The Exchange believes the proposed changes regarding the transactions fees to be charged for Professional Customer orders are reasonable, equitable and not unfairly discriminatory for several reasons. First, because Professional Customers submit more than 390 orders in listed options per day on average, Professional Customers generally engage in trading activity similar to Broker Dealers or Firms. The Exchange believes the Professional Customers' higher level of trading activity would result in greater ongoing operational costs, which costs the Exchange aims to recover by assessing Professional Customers (and Broker Dealers and Firms) higher fees for transactions. The Exchange also notes that other competing options exchanges likewise similarly charge Professional Customers the same transaction fees as Firms and Broker Dealers.[10] The Exchange also believes that continuing certain fees and credits for Professional Customers at the same rate as Customer orders (*e.g.,* for Manual executions) is reasonable because it is consistent with the Exchange's current fees and credits, and is designed to attract Professional Customer order flow to the Exchange, which provides a greater opportunity for trading by all market participants.

Further, the Exchange believes that the proposed Take Liquidity rates for Lead Market Makers, Market Makers, Firms and Broker Dealers, and Professional Customers are reasonable, equitable and not unfairly discriminatory because they are competitive with fees charged by other exchanges and are designed to attract (and compete for) order flow to the Exchange, which provides a greater opportunity for trading by all market

[7] 15 U.S.C. 78f(b).

[8] 15 U.S.C. 78f(b)(4) and (5).

[9] *See supra* n. 5.

[10] *See, e.g.,* NASDAQ OMX PHLX, *available here http://www.nasdaqtrader.com/Micro.aspx?id=phlxpricing* (charging the Professional Customers the same rate as Broker Dealers and Firms); NYSE Amex Options, *available here, https://www.nyse.com/publicdocs/nyse/markets/amex-options/NYSE_Amex_Options_Fee_Schedule.pdf* (same).

participants.[11] In addition, the increased take fees are reasonable because the fees would generate revenue that would help to support the credits offered for posting liquidity, which are available to all market participants.

The Exchange also believes that the proposed changes are equitable and not unfairly discriminatory because the changes to Take Liquidity Fees for Market Makers and Lead Market Makers would apply to all Market Makers and Lead Market Makers on an equal and non-discriminatory basis. The Exchange believes the changes to Firm, Broker Dealer, and Professional Customer Take Liquidity Fees are equitable and not unfairly discriminatory because they apply to all non-Customer participants who do not have the burden of Market Making obligations.

The Exchange believes the adjustments to qualifications for enhanced posting liquidity credits and increases in various credits, are reasonable and not unfairly discriminatory as they are designed to attract increased Customer (and Professional Customer) business on the Exchange and are achievable in various ways. An increase in Customer (and Professional Customer) orders executed on the Exchange benefits all participants by offering greater price discovery, increased transparency, and an increased opportunity to trade on the Exchange. The Exchange also believes that the proposed credits are reasonable because they are within a range of similar credits available on other option exchanges.[12] Additionally, attracting posted Customer and Professional Customer order flow is desirable because it encourages liquidity to be present on the Exchange.

The Exchange believes the introduction of a new Tier in the Customer Monthly Posting Credit Tiers and Qualifications for Executions in Penny Pilot Issues is reasonable because it is designed to attract additional Customer (and Professional Customer) electronic equity and ETF option volume to the Exchange, which would benefit all participants by offering greater price discovery, increased transparency, and an increased opportunity to trade on the Exchange. Additionally, the Exchange believes the proposed credits available on this new tier are reasonable because they would incent OTPs to submit Customer (and Professional Customer) electronic equity and ETF option orders to the Exchange and would result in credits that are reasonably related to the Exchange's market quality that is associated with higher volumes.

The Exchange believes that the proposed changes in the Customer Posting Credit Tiers in Non Penny Pilot Issues and the Customer Incentive Program are equitable and not unfairly discriminatory because they will be available to all OTPs that execute posted electronic Customer (and Professional Customer) orders on the Exchange on an equal and non-discriminatory basis, in particular because they provide alternative means of achieving the same credit. The Exchange believes that providing methods for achieving the credits based on posted electronic Customer (and Professional Customer) Executions in both Penny Pilot and non-Penny Pilot issues is equitable and not unfairly discriminatory because it would continue to result in more OTPs qualifying for the credits and therefore reducing their overall transaction costs on the Exchange.

Further, the Exchange believes the proposed change to the Customer Posting Credit Tiers in Non Penny Pilot Issues and Customer Incentive Program is reasonable because it is designed to continue to bring additional posted order flow to NYSE Arca Equities, so as to provide additional opportunities for all ETP Holders to trade on NYSE Arca Equities.

The Exchange believes the creation of a Take Fee discount available to Lead Market Makers, Market Makers, Firms, Broker Dealers and Professional Customers is reasonable, equitable, and not unfairly discriminatory because it is applicable to all participants other than Customers, who pay a much lower Take Liquidity Fee, and because it is available to all firms that provide Customer and Professional Customer orders. The Exchange also believes this change will provide an incentive for OTPs to execute large volumes of orders on the Exchange, which benefits all market participants through increased liquidity and enhanced price discovery. The Exchange also notes that the proposed Take Fee discount is consistent with those offered on competing options exchanges.[13]

For these reasons, the Exchange believes that the proposal is consistent with the Act.

B. Self-Regulatory Organization's Statement on Burden on Competition

In accordance with Section 6(b)(8) of the Act,[14] the Exchange does not believe that the proposed rule change will impose any burden on competition that is not necessary or appropriate in furtherance of the purposes of the Act. Instead, the Exchange believes that the proposed change would continue to encourage competition, including by attracting additional liquidity to the Exchange, which would continue to make the Exchange a more competitive venue for, among other things, order execution and price discovery. The Exchange does not believe that the proposed change will impair the ability of any Market Participants or competing order execution venues to maintain their competitive standing in the financial markets.

The increases in Take Liquidity fees will impact all affected order types (*i.e.,* Professional Customers, Firm, Broker Dealers) in issues at the same rate. The proposed changes to the Customer Monthly Posting Credit Tiers, and the proposed modification to the Customer Incentives are designed to attract additional volume, in particular posted electronic Customer (and Professional Customer) executions, to the Exchange, which would promote price discovery and transparency in the securities markets thereby benefitting competition in the industry. As stated above, the Exchange believes that the proposed change would impact all similarly situated OTPs that post electronic Customer (and Professional Customer) executions on the Exchange equally, and as such, the proposed change would not impose a disparate burden on competition either among or between classes of market participants.

The Exchange notes that it operates in a highly competitive market in which market participants can readily favor competing venues. In such an environment, the Exchange must continually review, and consider adjusting, its fees and credits to remain competitive with other exchanges. For the reasons described above, the Exchange believes that the proposed rule change reflects this competitive environment.

C. Self-Regulatory Organization's Statement on Comments on the Proposed Rule Change Received From Members, Participants or Others

No written comments were solicited or received with respect to the proposed rule change.

[11] *See e.g.,* NASDAQ Options Market—Fees and Rebates, *available here, http://www.nasdaqtrader.com/Micro.aspx?id=optionsPricing.*

[12] *See, e.g., supra* n. 10.

[13] *See, e.g.,* BATS Options Exchange fee schedule (Professional, Firm and Market Maker Penny Pilot Take Volume Tiers) *available here, http://www.batsoptions.com/support/fee_schedule/.*

[14] 15 U.S.C. 78f(b)(8).

III. Date of Effectiveness of the Proposed Rule Change and Timing for Commission Action

The foregoing rule change is effective upon filing pursuant to Section 19(b)(3)(A) [15] of the Act and subparagraph (f)(2) of Rule 19b–4 [16] thereunder, because it establishes a due, fee, or other charge imposed by the Exchange.

At any time within 60 days of the filing of such proposed rule change, the Commission summarily may temporarily suspend such rule change if it appears to the Commission that such action is necessary or appropriate in the public interest, for the protection of investors, or otherwise in furtherance of the purposes of the Act. If the Commission takes such action, the Commission shall institute proceedings under Section 19(b)(2)(B) [17] of the Act to determine whether the proposed rule change should be approved or disapproved.

IV. Solicitation of Comments

Interested persons are invited to submit written data, views, and arguments concerning the foregoing, including whether the proposed rule change is consistent with the Act. Comments may be submitted by any of the following methods:

Electronic Comments

- Use the Commission's Internet comment form (*http://www.sec.gov/rules/sro.shtml*); or
- Send an email to *rule-comments@sec.gov.* Please include File Number SR–NYSEArca–2015–30 on the subject line.

Paper Comments

- Send paper comments in triplicate to Brent J. Fields, Secretary, Securities and Exchange Commission, 100 F Street NE., Washington, DC 20549–1090.

All submissions should refer to File Number SR–NYSEArca–2015–30. This file number should be included on the subject line if email is used. To help the Commission process and review your comments more efficiently, please use only one method.

The Commission will post all comments on the Commission's Internet Web site (*http://www.sec.gov/rules/sro.shtml*). Copies of the submission, all subsequent amendments, all written statements with respect to the proposed rule change that are filed with the Commission, and all written communications relating to the proposed rule change between the Commission and any person, other than those that may be withheld from the public in accordance with the provisions of 5 U.S.C. 552, will be available for Web site viewing and printing in the Commission's Public Reference Room, 100 F Street NE., Washington, DC 20549, on official business days between the hours of 10 a.m. and 3 p.m. Copies of such filing also will be available for inspection and copying at the principal offices of the Exchange. All comments received will be posted without change; the Commission does not edit personal identifying information from submissions. You should submit only information that you wish to make available publicly. All submissions should refer to File Number SR–NYSEArca–2015–30, and should be submitted on or before May 11, 2015.

For the Commission, by the Division of Trading and Markets, pursuant to delegated authority.[18]

Brent J. Fields,

Secretary.

[FR Doc. 2015–08943 Filed 4–17–15; 8:45 am]

BILLING CODE 8011–01–P

[15] 15 U.S.C. 78s(b)(3)(A).

[16] 17 CFR 240.19b–4(f)(2).

[17] 15 U.S.C. 78s(b)(2)(B).

[18] 17 CFR 200.30–3(a)(12).

SECURITIES AND EXCHANGE COMMISSION

[SEC File No. 270–188, OMB Control No. 3235–0212]

Proposed Collection; Comment Request

Upon Written Request, Copies Available From: Securities and Exchange Commission, Office of FOIA Services, 100 F Street NE., Washington, DC 20549–2736.

Extension:

Rule 12b–1.

Notice is hereby given that, pursuant to the Paperwork Reduction Act of 1995 (44 U.S.C. 3501 *et seq.*), the Securities and Exchange Commission (the ''Commission'') is soliciting comments on the collection of information summarized below. The Commission plans to submit this existing collection of information to the Office of Management and Budget for extension and approval.

Rule 12b–1 under the Investment Company Act of 1940 (17 CFR 270.12b–1) permits a registered open-end investment company (''fund'' or ''mutual fund'') to bear expenses associated with the distribution of its shares, provided that the mutual fund complies with certain requirements, including, among other things, that it adopt a written plan (''rule 12b–1 plan'') and that it has in writing any agreements relating to the rule 12b–1 plan. The rule in part requires that (i) The adoption or material amendment of a rule 12b–1 plan be approved by the mutual fund's directors, including its independent directors, and, in certain circumstances, its shareholders; (ii) the board review quarterly reports of amounts spent under the rule 12b–1 plan; and (iii) the board, including the independent directors, consider continuation of the rule 12b–1 plan and any related agreements at least annually. Rule 12b–1 also requires mutual funds relying on the rule to preserve for six years, the first two years in an easily accessible place, copies of the rule 12b–1 plan and any related agreements and reports, as well as minutes of board meetings that describe the factors considered and the basis for adopting or continuing a rule 12b–1 plan.

Rule 12b–1 also prohibits funds from paying for distribution of fund shares with brokerage commissions on their portfolio transactions. The rule requires funds that use broker-dealers that sell their shares to also execute their portfolio securities transactions, to implement policies and procedures reasonably designed to prevent: (i) the persons responsible for selecting broker-dealers to effect transactions in fund portfolio securities from taking into account broker-dealers' promotional or sales efforts when making those decisions; and (ii) a fund, its adviser or principal underwriter, from entering into any agreement under which the fund directs brokerage transactions or revenue generated by those transactions to a broker-dealer to pay for distribution of the fund's (or any other fund's) shares.

The board and shareholder approval requirements of rule 12b–1 are designed to ensure that fund shareholders and directors receive adequate information to evaluate and approve a rule 12b–1 plan and, thus, are necessary for investor protection. The requirement of quarterly reporting to the board is designed to ensure that the rule 12b–1 plan continues to benefit the fund and its shareholders. The recordkeeping requirements of the rule are necessary to enable Commission staff to oversee compliance with the rule. The requirement that funds or their advisers implement, and fund boards approve, policies and procedures in order to prevent persons charged with allocating fund brokerage from taking distribution efforts into account is designed to ensure that funds' selection of brokers to effect portfolio securities transactions is

not influenced by considerations about the sale of fund shares.

Based on information filed with the Commission by funds, Commission staff estimates that there are approximately 7837 mutual fund portfolios that have at least one share class subject to a rule 12b–1 plan.[1] However, many of these portfolios are part of an affiliated group of funds, or mutual fund family, that is overseen by a common board of directors. Although the board must review and approve the rule 12b–1 plan for each fund separately, we have allocated the costs and hourly burden related to rule 12b–1 based on the number of fund families that have at least one fund that charges rule 12b–1 fees, rather than on the total number of mutual fund portfolios that individually have a rule 12b–1 plan.[2] Based on information filed with the Commission, the staff estimates that there are approximately 330 fund families with common boards of directors that have at least one fund with a rule 12b–1 plan.

Based on previous conversations with fund representatives, Commission staff estimates that for each of the 330 mutual fund families with a portfolio that has a rule 12b–1 plan, the average annual burden of complying with the rule is 425 hours. This estimate takes into account the time needed to prepare quarterly reports to the board of directors, the board's consideration of those reports, and the board's initial or annual consideration of whether to continue the plan.[3] We therefore estimate that the total hourly burden per year for all funds to comply with current information collection requirements under rule 12b–1, is 140,250 hours (330 fund families × 425 hours per fund family = 140,250 hours).

If a currently operating fund seeks to (i) adopt a new rule 12b–1 plan or (ii) materially increase the amount it spends for distribution under its rule 12b–1 plan, rule 12b–1 requires that the fund obtain shareholder approval. As a consequence, the fund will incur the cost of a proxy.[4] Based on previous conversations with fund representatives, Commission staff estimates that approximately three funds per year prepare a proxy in connection with the adoption or material amendment of a rule 12b–1 plan. Funds typically hire outside legal counsel and proxy solicitation firms to prepare, print, and mail such proxies. The staff further estimates that the cost of each fund's proxy is $34,372. Thus the total annual cost burden of rule 12b–1 to the fund industry is $103,116 (3 funds requiring a proxy × $34,372 per proxy).

The estimate of average burden hours is made solely for the purposes of the Paperwork Reduction Act, and is not derived from a comprehensive or even a representative survey or study of the costs of Commission rules and forms.

The collections of information required by Rule 12b–1 are necessary to obtain the benefits of the rule. Notices to the Commission will not be kept confidential. An agency may not conduct or sponsor, and a person is not required to respond to a collection of information unless it displays a currently valid control number.

Written comments are invited on: (a) Whether the proposed collection of information is necessary for the proper performance of the functions of the Commission, including whether the information will have practical utility; (b) the accuracy of the Commission's estimate of the burden of the collection of information; (c) ways to enhance the quality, utility, and clarity of the information collected; and (d) ways to minimize the burden of the collection of information on respondents, including through the use of automated collection techniques or other forms of information technology. Consideration will be given to comments and suggestions submitted in writing within 60 days of this publication.

Please direct your written comments to Pamela Dyson, Director/Chief Information Officer, Securities and Exchange Commission, C/O Remi Pavlik-Simon, 100 F Street NE., Washington, DC 20549; or send an email to: *PRA_Mailbox@sec.gov.*

Dated: April 15, 2015.

Brent J. Fields,

Secretary.

[FR Doc. 2015–08992 Filed 4–17–15; 8:45 am]

BILLING CODE 8011–01–P

[1] This estimate is based on information from the Commission's NSAR database.

[2] This allocation is based on previous conversations with fund representatives on how fund boards comply with the requirements of rule 12b–1. Despite this allocation of hourly burdens and costs, the number of annual responses each year will continue to depend on the number of fund portfolios with rule 12b–1 plans rather than the number of fund families with rule 12b–1 plans. The staff estimates that the number of annual responses per fund portfolio will be four per year (quarterly, with the annual reviews taking place at one of the quarterly intervals). Thus, we estimate that funds will make 31,348 responses (7837 fund portfolios × 4 responses per fund portfolio = 31,348 responses) each year.

[3] We do not estimate any costs or time burden related to the recordkeeping requirements in rule 12b–1, as funds are either required to maintain these records pursuant to other rules or would keep these records in any case as a matter of business practice.

[4] In general, a fund adopts a rule 12b–1 plan before it begins operations. Therefore, the fund is not required to obtain the approval of its public shareholders because the fund's shares have not yet been offered to the public.

SECURITIES AND EXCHANGE COMMISSION

[Release No. 34–74724; File No. SR–BX–2015–017]

Self-Regulatory Organizations; Notice of Filing and Immediate Effectiveness of Proposed Rule Change by NASDAQ OMX BX, Inc. Relating to Member Application

April 14, 2015.

Pursuant to section 19(b)(1) of the Securities Exchange Act of 1934 (''Act''),[1] and Rule 19b–4 thereunder,[2] notice is hereby given that on April 8, 2015, NASDAQ OMX BX, Inc. (''BX'' or ''Exchange'') filed with the Securities and Exchange Commission (''SEC'' or ''Commission'') the proposed rule change as described in Items I, II, and III, below, which Items have been prepared by the Exchange. The Commission is publishing this notice to solicit comments on the proposed rule change from interested persons.

I. Self-Regulatory Organization's Statement of the Terms of Substance of the Proposed Rule Change

BX proposes to amend Rule 1013 titled ''New Member Application'' to include an expedited application process for firms that are already approved members of NASDAQ OMX PHLX LLC (''PHLX'').

The text of the proposed rule change is available on the Exchange's Web site at *http://nasdaqomxbx.cchwallstreet.com,* at the principal office of the Exchange, and at the Commission's Public Reference Room.

II. Self-Regulatory Organization's Statement of the Purpose of, and Statutory Basis for, the Proposed Rule Change

In its filing with the Commission, the Exchange included statements concerning the purpose of and basis for the proposed rule change and discussed any comments it received on the proposed rule change. The text of these statements may be examined at the places specified in Item IV below. The Exchange has prepared summaries, set forth in sections A, B, and C below, of

[1] 15 U.S.C. 78s(b)(1).

[2] 17 CFR 240.19b–4.

the most significant aspects of such statements.

A. Self-Regulatory Organization's Statement of the Purpose of, and Statutory Basis for, the Proposed Rule Change

1. Purpose

The purpose of the proposed rule change is to amend BX Rule 1013(a)(5), entitled Applicants That Are Members of an Association or Another Exchange, to permit an expedited review for new member applications seeking BX membership provided those applicants are approved members of PHLX.

Specifically, Exchange Rule 1013(a)(5)(C) currently permits the Exchange to accept applicants that gained membership at Financial Industry Regulatory Authority (''FINRA'') or The NASDAQ Stock Market LLC (''NASDAQ'') when considering a BX new member application. Applicants who are approved members of FINRA or NASDAQ are eligible for an abbreviated waive-in application eliminating the submission and review of duplicative supplemental material that has already been submitted and reviewed in connection with a FINRA or NASDAQ new member application.

At this time, the Exchange proposes to extend the abbreviated application process already in place for approved FINRA and/or NASDAQ members to PHLX members. The Exchange notes that the PHLX qualifications are the same as those applicable to BX membership requirements. PHLX approved members seeking BX membership will be required to submit a fully executed Waive-In Membership Application and Membership Agreement but will not be required to submit any duplicative documentation that was previously provided as part of the PHLX application. These PHLX members would still be required to provide additional information if there has been a material change in status from its original application with PHLX. Applicants will be required to attest that the information provided as part of previously conducted new membership review remains complete and accurate.

The Exchange also proposes to amend language in section (C) of this rule to further harmonize the application with the current NASDAQ application by updating the title of the BX membership application from ''Short Form'' to ''Waive-in'' and deleting unnecessary language that does not appear in the corresponding NASDAQ rule. The application is attached as Exhibit 3.

2. Statutory Basis

The Exchange believes that its proposal is consistent with section 6(b) of the Act [3] in general, and furthers the objectives of section 6(b)(5) of the Act [4] in particular, in that it is designed to prevent fraudulent and manipulative acts and practices, to promote just and equitable principles of trade, to foster cooperation and coordination with persons engaged in facilitating transactions in securities, to remove impediments to and perfect the mechanism of a free and open market and a national market system and, in general, to protect investors and the public interest.

Today, the BX Membership Department performs similar functions when reviewing new member applications for BX, NASDAQ and PHLX.[5] The Membership Department reviews: Applicant business plans, clearing arrangements, FOCUS reports, organizational charts, and written supervisory procedures for applicants desiring membership in any of the aforementioned markets. These membership requirements include, but are not limited to, review of registration as a Broker Dealer with the Commission, a net capital review, qualification of associated persons and examining written supervisory procedures. The same material is considered for each new member review conducted by FINRA on behalf of BX.

This proposed amendment is consistent with its current practices today when reviewing applications for members of NASDAQ and FINRA. BX proposes this rule change to harmonize its affiliated exchanges' rules to provide applicants similar application procedures for each of its markets. The PHLX new member review process is consistent with the BX new member review process. Applicants that are members of PHLX should be eligible for the waive-in process when seeking membership on BX similar to current waive-in opportunities available today for NASDAQ and FINRA members.

The proposed rule change would eliminate the duplicate review for prospective BX applicants that were approved for membership by PHLX. The waive-in process will promote efficiency with respect to the Exchange's membership review process and reduce the burden on applicants that have already been approved for membership on PHLX by reducing the duplicative information and documentation required to be provided to the Exchange for these members. As a result, Exchange staff will be able to focus its regulatory efforts on reviewing any material changes or new information that may affect the applicant's eligibility for Exchange membership.

This proposed rule change does not affect the protection of investors as BX will maintain the vigorous membership review that is conducted today when reviewing PHLX member applications.

B. Self-Regulatory Organization's Statement on Burden on Competition

The Exchange does not believe that the proposed rule change will impose any burden on competition not necessary or appropriate in furtherance of the purposes of the Act. The proposed waive-in process for approved PHLX members will not impose any burden on competition, but rather it will remove unnecessary burdens that currently exist for PHLX member applicants seeking BX membership. The proposal will eliminate the redundant review process for PHLX members that currently does not exist for FINRA and NASDAQ members applying to become BX members.

C. Self-Regulatory Organization's Statement on Comments on the Proposed Rule Change Received From Members, Participants, or Others

No written comments were either solicited or received.

III. Date of Effectiveness of the Proposed Rule Change and Timing for Commission Action

Because the foregoing proposed rule change does not significantly affect the protection of investors or the public interest; does not impose any significant burden on competition; and by its terms does not become operative for 30 days from the date on which it was filed, or such shorter time as the Commission may designate, it has become effective pursuant to section 19(b)(3)(A) [6] of the Act and Rule 19b–4(f)(6) thereunder.[7]

At any time within 60 days of the filing of the proposed rule change, the Commission summarily may temporarily suspend such rule change if it appears to the Commission that such action is: Necessary or appropriate in the public interest; for the protection of

[3] 15 U.S.C. 78f(b).

[4] 15 U.S.C. 78f(b)(5).

[5] Today, FINRA conducts the new member application reviews for NASDAQ and BX pursuant to a 17d–2 and Regulatory Services Agreement. These application reviews are administered by FINRA and subject to BX's final review and decision. PHLX maintains a separate new member application review that is conducted by NASDAQ and not FINRA.

[6] 15 U.S.C. 78s(b)(3)(A).

[7] 17 CFR 240.19b–4(f)(6).

investors; or otherwise in furtherance of the purposes of the Act. If the Commission takes such action, the Commission shall institute proceedings to determine whether the proposed rule should be approved or disapproved.

IV. Solicitation of Comments

Interested persons are invited to submit written data, views and arguments concerning the foregoing, including whether the proposed rule change is consistent with the Act. Comments may be submitted by any of the following methods:

Electronic Comments

- Use the Commission's Internet comment form (*http://www.sec.gov/rules/sro.shtml*); or
- Send an email to *rule-comments@sec.gov.* Please include File Number SR–BX–2015–017 on the subject line.

Paper Comments

- Send paper comments in triplicate to Brent J. Fields, Secretary, Securities and Exchange Commission, 100 F Street NE., Washington, DC 20549–1090.

All submissions should refer to File Number SR–BX–2015–017. This file number should be included on the subject line if email is used. To help the Commission process and review your comments more efficiently, please use only one method. The Commission will post all comments on the Commission's Internet Web site (*http://www.sec.gov/rules/sro.shtml).* Copies of the submission, all subsequent amendments, all written statements with respect to the proposed rule change that are filed with the Commission, and all written communications relating to the proposed rule change between the Commission and any person, other than those that may be withheld from the public in accordance with the provisions of 5 U.S.C. 552, will be available for Web site viewing and printing in the Commission's Public Reference Room, 100 F Street NE., Washington, DC 20549, on official business days between the hours of 10:00 a.m. and 3:00 p.m. Copies of such filing also will be available for inspection and copying at the principal office of the Exchange. All comments received will be posted without change; the Commission does not edit personal identifying information from submissions. You should submit only information that you wish to make available publicly. All submissions should refer to File Number SR–BX–2015–017 and should be submitted on or before May 11, 2015.

For the Commission, by the Division of Trading and Markets, pursuant to delegated authority.[8]

Brent J. Fields,

Secretary.

[FR Doc. 2015–08940 Filed 4–17–15; 8:45 am]

BILLING CODE 8011–01–P

[8] 17 CFR 200.30–3(a)(12).

SMALL BUSINESS ADMINISTRATION

[Disaster Declaration #14259 and #14260]; [RHODE ISLAND Disaster #RI–00013]

Administrative Declaration of a Disaster for the State of Rhode Island

AGENCY: U.S. Small Business Administration.

ACTION: Notice.

SUMMARY: This is a notice of an Administrative declaration of a disaster for the State of Rhode Island dated 04/06/2015.

Incident: Condo Fire.

Incident Period: 03/11/2015.

DATES: *Effective:* 04/06/2015.

Physical Loan Application Deadline Date: 06/05/2015.

Economic Injury (EIDL) Loan Application Deadline Date: 01/06/2016.

ADDRESSES: Submit completed loan applications to: U.S. Small Business Administration, Processing and Disbursement Center, 14925 Kingsport Road, Fort Worth, TX 76155.

FOR FURTHER INFORMATION CONTACT: A. Escobar, Office of Disaster Assistance, U.S. Small Business Administration, 409 3rd Street SW., Suite 6050, Washington, DC 20416.

SUPPLEMENTARY INFORMATION: Notice is hereby given that as a result of the Administrator's disaster declaration, applications for disaster loans may be filed at the address listed above or other locally announced locations.

The following areas have been determined to be adversely affected by the disaster:

Primary Counties: Kent.

Contiguous Counties:

Rhode Island: Bristol, Providence, Washington.

Connecticut: New London, Windham.

The Interest Rates are:

	Percent
For Physical Damage:	
Homeowners With Credit Available Elsewhere	3.625
Homeowners Without Credit Available Elsewhere	1.813
Businesses With Credit Available Elsewhere	6.000
Businesses Without Credit Available Elsewhere	4.000
Non-Profit Organizations With Credit Available Elsewhere	2.625
Non-Profit Organizations Without Credit Available Elsewhere	2.625
For Economic Injury:	
Businesses & Small Agricultural Cooperatives Without Credit Available Elsewhere	4.000
Non-Profit Organizations Without Credit Available Elsewhere	2.625

The number assigned to this disaster for physical damage is 14259 5 and for economic injury is 14260 0.

The States which received an EIDL Declaration # are Rhode Island, Connecticut.

(Catalog of Federal Domestic Assistance Numbers 59002 and 59008)

Dated: April 6, 2015.

Maria Contreras-Sweet,

Administrator.

[FR Doc. 2015–08968 Filed 4–17–15; 8:45 am]

BILLING CODE 8025–01–P

SMALL BUSINESS ADMINISTRATION

April 17, 2015 [Disaster Declaration #14266 and #14267]

New York Disaster #NY–00158

AGENCY: U.S. Small Business Administration.

ACTION: Notice.

SUMMARY: This is a notice of an Administrative declaration of a disaster for the State of New York dated 04/09/2015.

Incident: Apartment Building Fire.

Incident Period: 03/06/2015.

Effective Date: 04/09/2015.

Physical Loan Application Deadline Date: 06/08/2015.

Economic Injury (EIDL) Loan Application Deadline Date: 01/11/2016.

ADDRESSES: Submit completed loan applications to: U.S. Small Business Administration, Processing and Disbursement Center, 14925 Kingsport Road, Fort Worth, TX 76155.

FOR FURTHER INFORMATION CONTACT: A. Escobar, Office of Disaster Assistance, U.S. Small Business Administration, 409 3rd Street SW., Suite 6050, Washington, DC 20416.

SUPPLEMENTARY INFORMATION: Notice is hereby given that as a result of the Administrator's disaster declaration, applications for disaster loans may be filed at the address listed above or other locally announced locations.

The following areas have been determined to be adversely affected by the disaster:

Primary Counties: Schenectady.
Contiguous Counties:
New York: Albany, Montgomery, Saratoga, Schoharie.
The Interest Rates are:

	Percent
For Physical Damage:	
Homeowners With Credit Available Elsewhere	3.625
Homeowners Without Credit Available Elsewhere	1.813
Businesses With Credit Available Elsewhere	6.000
Businesses Without Credit Available Elsewhere	4.000
Non-Profit Organizations With Credit Available Elsewhere	2.625
Non-Profit Organizations Without Credit Available Elsewhere	2.625
For Economic Injury:	
Businesses & Small Agricultural Cooperatives Without Credit Available Elsewhere	4.000
Non-Profit Organizations Without Credit Available Elsewhere	2.625

The number assigned to this disaster for physical damage is 14266 5 and for economic injury is 14267 0.

The State which received an EIDL Declaration # is New York.

(Catalog of Federal Domestic Assistance Numbers 59002 and 59008)

Dated: April 9, 2015.

Maria Contreras-Sweet,

Administrator.

[FR Doc. 2015–08972 Filed 4–17–15; 8:45 am]

BILLING CODE 8025–01–P

SMALL BUSINESS ADMINISTRATION

[Disaster Declaration #14263 and #14264]; [OKLAHOMA Disaster # OK–00091]

Administrative Declaration of a Disaster for the State of Oklahoma

AGENCY: U.S. Small Business Administration.

ACTION: Notice.

SUMMARY: This is a notice of an Administrative declaration of a disaster for the State of OKLAHOMA dated 04/07/2015.

Incident: Tornadoes, Severe Storms, Straight-line Winds and Flooding.

Incident Period: 03/25/2015 through 03/26/2015.

DATES: *Effective:* 04/07/2015.

Physical Loan Application Deadline Date: 06/08/2015.

Economic Injury (EIDL) Loan Application Deadline Date: 01/07/2016.

ADDRESSES: Submit completed loan applications to: U.S. Small Business Administration, Processing and Disbursement Center, 14925 Kingsport Road, Fort Worth, TX 76155.

FOR FURTHER INFORMATION CONTACT: A. Escobar, Office of Disaster Assistance, U.S. Small Business Administration, 409 3rd Street SW., Suite 6050, Washington, DC 20416.

SUPPLEMENTARY INFORMATION: Notice is hereby given that as a result of the Administrator's disaster declaration, applications for disaster loans may be filed at the address listed above or other locally announced locations.

The following areas have been determined to be adversely affected by the disaster:

Primary Counties: Cleveland, Tulsa.
Contiguous Counties:
Oklahoma: Canadian, Creek, Grady, Mcclain, Oklahoma, Okmulgee, Osage, Pawnee, Pottawatomie, Rogers, Wagoner, Washington.
The Interest Rates are:

	Percent
For Physical Damage:	
Homeowners With Credit Available Elsewhere	3.625
Homeowners Without Credit Available Elsewhere	1.813
Businesses With Credit Available Elsewhere	6.000
Businesses Without Credit Available Elsewhere	4.000
Non-Profit Organizations With Credit Available Elsewhere	2.625
Non-Profit Organizations Without Credit Available Elsewhere	2.625
For Economic Injury:	
Businesses & Small Agricultural Cooperatives Without Credit Available Elsewhere	4.000
Non-Profit Organizations Without Credit Available Elsewhere	2.625

The number assigned to this disaster for physical damage is 14263 C and for economic injury is 14264 0.

The State which received an EIDL Declaration # is Oklahoma.

(Catalog of Federal Domestic Assistance Numbers 59002 and 59008)

Dated: April 7, 2015.

Maria Contreras-Sweet,

Administrator.

[FR Doc. 2015–08962 Filed 4–17–15; 8:45 am]

BILLING CODE 8025–01–P

SMALL BUSINESS ADMINISTRATION

[Disaster Declaration #14268 and #14269]

Connecticut Disaster # CT–00034

AGENCY: U.S. Small Business Administration.

ACTION: Notice.

SUMMARY: This is a Notice of the Presidential declaration of a major disaster for Public Assistance Only for the State of Connecticut (FEMA–4213–DR), dated 04/08/2015.

Incident: Severe Winter Storm and Snowstorm

Incident Period: 01/26/2015 through 01/28/2015

Effective Date: 04/08/2015

Physical Loan Application Deadline Date: 06/08/2015

Economic Injury (EIDL) Loan Application Deadline Date: 01/08/2016

ADDRESSES: Submit completed loan applications to: U.S. Small Business Administration, Processing and Disbursement Center, 14925 Kingsport Road, Fort Worth, TX 76155.

FOR FURTHER INFORMATION CONTACT: A. Escobar, Office of Disaster Assistance, U.S. Small Business Administration, 409 3rd Street SW., Suite 6050, Washington, DC 20416.

SUPPLEMENTARY INFORMATION: Notice is hereby given that as a result of the President's major disaster declaration on 04/08/2015, Private Non-Profit organizations that provide essential services of governmental nature may file disaster loan applications at the address listed above or other locally announced locations.

The following areas have been determined to be adversely affected by the disaster:

Primary Counties: New London, Tolland, Windham.

The Interest Rates are:

	Percent
For Physical Damage:	
Non-Profit Organizations With Credit Available Elsewhere	2.625
Non-Profit Organizations Without Credit Available Elsewhere	2.625
For Economic Injury:	
Non-Profit Organizations Without Credit Available Elsewhere	2.625

The number assigned to this disaster for physical damage is 14268B and for economic injury is 14269B

(Catalog of Federal Domestic Assistance Numbers 59002 and 59008)

Joseph P. Loddo,

Acting Associate Administrator for Disaster Assistance.

[FR Doc. 2015–08971 Filed 4–17–15; 8:45 am]

BILLING CODE 8025–01–P

OFFICE OF THE UNITED STATES TRADE REPRESENTATIVE

[Dispute No. WTO/DS491/Docket No. USTR–2015–0005]

WTO Dispute Settlement Proceeding Regarding United States—Anti-Dumping and Countervailing Measures on Certain Coated Paper From Indonesia

AGENCY: Office of the United States Trade Representative.

ACTION: Notice; request for comments.

SUMMARY: The Office of the United States Trade Representative (''USTR'') is providing notice that on March 13, 2015, the Republic of Indonesia requested consultations with the United States under the *Marrakesh Agreement Establishing the World Trade Organization* (''WTO Agreement'') concerning antidumping (''AD'') and countervailing duty (''CVD'') measures pertaining to certain coated paper suitable for high-quality print graphics using sheet-fed presses from Indonesia. That request may be found at *www.wto.org* contained in a document designated as WT/DS491/1. USTR invites written comments from the public concerning the issues raised in this dispute.

DATES: Although USTR will accept any comments received during the course of the dispute settlement proceedings, comments should be submitted on or before May 11, 2015, to be assured of timely consideration by USTR.

ADDRESSES: Public comments should be submitted electronically to *www.regulations.gov,* docket number USTR–2015–0005. If you are unable to provide submissions by *www.regulations.gov,* please contact Sandy McKinzy at (202) 395–9483 to arrange for an alternative method of transmission.

If (as explained below) the comment contains confidential information, then the comment should be submitted by fax only to Sandy McKinzy at (202) 395–3640.

FOR FURTHER INFORMATION CONTACT: Micah Myers, Associate General Counsel, or Juli Schwartz, Assistant General Counsel, Office of the United States Trade Representative, 600 17th Street NW., Washington, DC 20508, (202) 395–3150.

SUPPLEMENTARY INFORMATION: USTR is providing notice that consultations have been requested pursuant to the WTO *Understanding on Rules and Procedures Governing the Settlement of Disputes* (''DSU''). If such consultations should fail to resolve the matter, Indonesia could request the establishment of a dispute settlement panel.

Major Issues Raised by Indonesia

On March 13, 2015, Indonesia requested consultations concerning AD and CVD measures pertaining to certain coated paper suitable for high-quality print graphics using sheet-fed presses. The specific U.S. legal instruments referenced in Indonesia's consultations request are: (1) Section 771(11)(B) of the Tariff Act of 1930, as amended, *codified at* 19 U.S.C. 1677(11)(B); (2) *Certain Coated Paper from Indonesia: Initiation of Countervailing Duty Investigation,* 74 FR 53707 (Oct. 20, 2009); (3) *Certain Coated Paper Suitable for High-Quality Print Graphics Using Sheet-Fed Presses from Indonesia and the People's Republic of China: Initiation of Antidumping Duty Investigations,* 74 FR 53710 (Oct. 20, 2009); (4) *Certain Coated Paper Suitable for High-Quality Print Graphics Using Sheet-Fed Presses from China and Indonesia,* 74 FR 50243 (Sept. 30, 2009); (5) *Certain Coated Paper Suitable for High-Quality Print Graphics Using Sheet-Fed Presses from China and Indonesia,* 74 FR 61174 (Nov. 23, 2009); (6) *Certain Coated Paper Suitable for High-Quality Print Graphics Using Sheet-Fed Presses from Indonesia: Preliminary Affirmative Countervailing Duty Determination and Alignment of Final Countervailing Duty Determination with Final Antidumping Duty Determination,* 75 FR 10761 (Mar. 9, 2010); (7) *Certain Coated Paper Suitable for High-Quality Print Graphics Using Sheet-Fed Presses from Indonesia: Preliminary Determination of Sales at Less Than Fair Value and Postponement of Final Determination,* 75 FR 24885 (May 6, 2010); (8) *Certain Coated Paper Suitable for High-Quality Print Graphics Using Sheet-Fed Presses from Indonesia: Final Affirmative Countervailing Duty Determination,* 75 FR 59209 (Sept. 27, 2010); (9) *Certain Coated Paper Suitable for High-Quality Print Graphics Using Sheet-Fed Presses from Indonesia: Final Determination of Sales at Less Than Fair Value,* 75 FR 59223 (Sept. 27, 2010); (10) *Certain Coated Paper Suitable for High-Quality Print Graphics Using Sheet-Fed Presses from China and Indonesia,* 75 FR 70289 (Nov. 17, 2010); (11) *Certain Coated Paper Suitable for High-Quality Print Graphics Using Sheet-Fed Presses from Indonesia: Countervailing Duty Order,* 75 FR 70206 (Nov. 17, 2010); and (12) *Certain Coated Paper Suitable for High-Quality Print Graphics Using Sheet-Fed Presses from Indonesia: Antidumping Duty Order,* 75 FR 70205 (Nov. 17, 2010).

With respect to the CVD measures, Indonesia challenges the U.S. Department of Commerce's (''DOC'') determination that Indonesia provided standing timber for less than adequate remuneration, describing it in the consultation request as a ''*per se* determination of price distortion'' without a (corresponding) determination of ''the adequacy of remuneration 'in relation to prevailing market conditions.' '' Indonesia also states that DOC failed to ''examine whether there was a plan or scheme in place sufficient to constitute a 'subsidy programme.' '' Indonesia further claims DOC ''did not identify whether the entity providing the purported subsidy was the national, regional, or local government and . . . thus . . . whether the subsidy was 'specific to an enterprise . . . within the jurisdiction of the granting authority' '' (third ellipsis in original). In addition, Indonesia challenges DOC's facts available analysis in which it concluded that the Government of Indonesia forgave debt.

With respect to both the AD and CVD measures, Indonesia alleges that the U.S. International Trade Commission's (''ITC'') threat of injury determination ''relied on 'allegation, conjecture [and] remote possibility,' '' was not based ''on a change in circumstances that was 'clearly foreseen and imminent,' '' and showed no ''causal relationship between the [subject] imports and the . . . threat of injury to the domestic industry.''

With respect to 19 U.S.C. 1677(11)(B), Indonesia contends that ''the law does not consider or exercise 'special care' '' as a result of the ''requirement that a tie vote in a threat of injury determination must be treated as an affirmative . . . [ITC] determination.''

Indonesia alleges inconsistencies with Article VI of the *General Agreement on Tariffs and Trade 1994,* Articles 1, 3.5, 3.7 and 3.8 of the *Agreement on Implementation of Article VI of the General Agreement on Tariffs And Trade 1994* and Articles 2.1, 12.7, 10, 14(d), 15.5, 15.7 and 15.8 of the *Agreement on Subsidies and Countervailing Measures.*

Public Comment: Requirements for Submissions

Interested persons are invited to submit written comments concerning the issues raised in this dispute. Persons may submit public comments electronically to *www.regulations.gov* docket number USTR–2015–0005. If you are unable to provide submissions by *www.regulations.gov,* please contact Sandy McKinzy at (202) 395–9483 to arrange for an alternative method of transmission.

To submit comments via *www.regulations.gov,* enter docket

number USTR–2015–0005 on the home page and click ''Search.'' The site will provide a search-results page listing all documents associated with this docket. Find a reference to this notice by selecting ''Notice'' under ''Document Type'' on the left side of the search-results page, and click on the link entitled ''Comment Now!'' (For further information on using the *www.regulations.gov* Web site, please consult the resources provided on the Web site by clicking on ''How to Use This Site'' on the left side of the home page.)

The *www.regulations.gov* Web site allows users to provide comments by filling in a ''Type Comments'' field, or by attaching a document using an ''Upload File'' field. It is expected that most comments will be provided in an attached document. If a document is attached, it is sufficient to type ''See attached'' in the ''Type Comments'' field.

A person requesting that information contained in a comment that he/she submitted, be treated as confidential business information must certify that such information is business confidential and would not customarily be released to the public by the submitter. Confidential business information must be clearly designated as such and the submission must be marked ''BUSINESS CONFIDENTIAL'' at the top and bottom of the cover page and each succeeding page. Any comment containing business confidential information must be submitted by fax to Sandy McKinzy at (202) 395–3640. A non-confidential summary of the confidential information must be submitted to *www.regulations.gov.* The non-confidential summary will be placed in the docket and will be open to public inspection.

USTR may determine that information or advice contained in a comment submitted, other than business confidential information, is confidential in accordance with Section 135(g)(2) of the Trade Act of 1974 (19 U.S.C. 2155(g)(2)). If the submitter believes that information or advice may qualify as such, the submitter:

(1) Must clearly so designate the information or advice;

(2) Must clearly mark the material as ''SUBMITTED IN CONFIDENCE'' at the top and bottom of the cover page and each succeeding page; and

(3) Must provide a non-confidential summary of the information or advice.

Any comment containing confidential information must be submitted by fax. A non-confidential summary of the confidential information must be submitted to *www.regulations.gov.* The non-confidential summary will be placed in the docket and will be open to public inspection.

Pursuant to section 127(e) of the Uruguay Round Agreements Act (19 U.S.C. 3537(e)), USTR will maintain a docket on this dispute settlement proceeding, docket number USTR–2015–0005, accessible to the public at *www.regulations.gov.* The public file will include non-confidential comments received by USTR from the public regarding the dispute. If a dispute settlement panel is convened, or in the event of an appeal from such a panel, the following documents will be made available to the public at *www.ustr.gov*: The United States' submissions, any non-confidential submissions received from other participants in the dispute, and any non-confidential summaries of submissions received from other participants in the dispute. In the event that a dispute settlement panel is convened, or in the event of an appeal from such a panel, the report of the panel, and, if applicable, the report of the Appellate Body, will also be available on the Web site of the World Trade Organization, at *www.wto.org.* Comments open to public inspection may be viewed at *www.regulations.gov*.

Juan Millan,

Assistant United States Trade Representative for Monitoring and Enforcement.

[FR Doc. 2015–09026 Filed 4–17–15; 8:45 am]

BILLING CODE 3290–F5–P

DEPARTMENT OF TRANSPORTATION

Federal Railroad Administration

[Docket No. FRA–2015–0007–N–6]

Proposed Agency Information Collection Activities; Comment Request

AGENCY: Federal Railroad Administration (FRA), Department of Transportation (DOT).

ACTION: Notice and request for comments.

SUMMARY: In compliance with the Paperwork Reduction Act of 1995, this notice announces that the renewal Information Collection Requests (ICRs) abstracted below are being forwarded to the Office of Management and Budget (OMB) for review and comment. The ICRs describes the nature of the information collection and its expected burden. The **Federal Register** notice with a 60-day comment period soliciting comments on the following collections of information was published on February 9, 2015.

DATES: Comments must be submitted on or before May 20, 2015.

FOR FURTHER INFORMATION CONTACT: Mr. Robert Brogan, Office of Planning and Evaluation Division, RRS–21, Federal Railroad Administration, 1200 New Jersey Ave. SE., Mail Stop 25, Washington, DC 20590 (Telephone: (202) 493–6292), or Ms. Kimberly Toone, Office of Information Technology, RAD–20, Federal Railroad Administration, 1200 New Jersey Ave. SE., Mail Stop 35, Washington, DC 20590 (Telephone: (202) 493–6132). (These telephone numbers are not toll-free.)

SUPPLEMENTARY INFORMATION: The Paperwork Reduction Act of 1995 (PRA), Public Law 104–13, sec. 2, 109 Stat. 163 (1995) (codified as revised at 44 U.S.C. 3501–3520), and its implementing regulations, 5 CFR part 1320, require Federal agencies to issue two notices seeking public comment on information collection activities before OMB may approve paperwork packages. 44 U.S.C. 3506, 3507; 5 CFR 1320.5, 1320.8(d)(1), and 1320.12. On February 9, 2015, FRA published a 60-day notice in the **Federal Register** soliciting comment on ICR that the agency is seeking OMB approval. *See* 80 FR 7072. FRA received no comments in response to this notice.

Before OMB decides whether to approve these proposed collections of information, it must provide 30 days for public comment. 44 U.S.C. 3507(b); 5 CFR 1320.12(d). Federal law requires OMB to approve or disapprove paperwork packages between 30 and 60 days after the 30 day notice is published. 44 U.S.C. 3507 (b)–(c); 5 CFR 1320.12(d); *see also* 60 FR 44978, 44983, Aug. 29, 1995. OMB believes that the 30 day notice informs the regulated community to file relevant comments and affords the agency adequate time to digest public comments before it renders a decision. 60 FR 44983, Aug. 29, 1995. Therefore, respondents should submit their respective comments to OMB within 30 days of publication to best ensure having their full effect. 5 CFR 1320.12(c); *see also* 60 FR 44983, Aug. 29, 1995.

The summary below describes the nature of the information collection requests (ICRs) and the expected burden. The revised request is being submitted for clearance by OMB as required by the PRA.

Title: Inspection and Maintenance of Steam Locomotives (Formerly Steam Locomotive Inspection).

OMB Control Number: 2130–0505.

Abstract: The Locomotive Boiler Inspection Act (LBIA) of 1911 required each railroad subject to the Act to file copies of its rules and instructions for the inspection of locomotives. The original LBIA was expanded to cover the entire steam locomotive and tender and all its parts and appurtenances. This Act then requires carriers to make inspections and to repair defects to ensure the safe operation of steam locomotives. The collection of information is used by tourist or historic railroads and by locomotive owners/operators to provide a record for each day a steam locomotive is placed in service, as well as a record that the required steam locomotive inspections are completed. The collection of information is also used by FRA Federal inspectors to verify that necessary safety inspections and tests have been completed and to ensure that steam locomotives are indeed ''safe and suitable'' for service and are properly operated and maintained.

Type of Request: Extension without Change of a Currently Approved Information Collection.

Affected Public: Businesses (Railroads).

Form(s): FRA–1, FRA–2, FRA–3, FRA–4, FRA–5, FRA–19.

Annual Estimated Burden: 18,665 hours.

Title: Control of Alcohol and Drug Use in Railroad Operations.

OMB Control Number: 2130–0526.

Abstract: The information collection requirements contained in pre-employment and ''for cause'' testing regulations are intended to ensure a sense of fairness and accuracy for railroads and their employees. The principal information—evidence of unauthorized alcohol or drug use—is used to prevent accidents by screening personnel who perform safety-sensitive service. FRA uses the information to measure the level of compliance with regulations governing the use of alcohol or controlled substances. Elimination of this problem is necessary to prevent accidents, injuries, and fatalities of the nature already experienced and further reduce the risk of a truly catastrophic accident.

Type of Request: Extension without Change of a Currently Approved Information Collection.

Affected Public: Businesses (Railroads).

Form(s): FRA F 6180.73, 6180.74, 6180.94A, 61880.94B.

Annual Estimated Burden: 31,797 hours.

Addressee: Send comments regarding these information collections to the Office of Information and Regulatory Affairs, Office of Management and Budget, 725 Seventeenth Street NW., Washington, DC 20503, Attention: FRA Desk Officer. Comments may also be sent via email to OMB at the following address: *oira_submissions@omb.eop.gov.*

Comments are invited on the following: Whether the proposed collections of information are necessary for the proper performance of the functions of the Department, including whether the information will have practical utility; the accuracy of the Department's estimates of the burden of the proposed information collections; ways to enhance the quality, utility, and clarity of the information to be collected; and ways to minimize the burden of the collections of information on respondents, including the use of automated collection techniques or other forms of information technology.

A comment to OMB is best assured of having its full effect if OMB receives it within 30 days of publication of this notice in the **Federal Register**.

Authority: 44 U.S.C. 3501–3520.

Rebecca Pennington,

Chief Financial Officer.

[FR Doc. 2015–08931 Filed 4–17–15; 8:45 am]

BILLING CODE 4910–06–P

DEPARTMENT OF TRANSPORTATION

National Highway Traffic Safety Administration

[U.S. DOT Docket Number NHTSA–2012–0029]

Reports, Forms, and Recordkeeping Requirements

AGENCY: National Highway Traffic Safety Administration (NHTSA), Department of Transportation (DOT).

ACTION: Request for public comment on an extension of a currently approved collection.

SUMMARY: Before a Federal agency can collect certain information from the public, it must receive approval from the Office of Management and Budget (OMB). Under procedures established by the Paperwork Reduction Act of 1995, before seeking OMB approval, Federal agencies must solicit public comment on proposed collections of information, including extensions and reinstatement of previously approved collections.

DATES: Comments must be received on or before June 19, 2015.

ADDRESSES: Comments must refer to the docket notice numbers cited at the beginning of this notice and be submitted to Docket Management, 1200 New Jersey Avenue SE., West Building Ground Floor, Room W12–140, Washington, DC 20590 by any of the following methods.

- *Federal e-Rulemaking Portal: http://www.regulations.gov.* Follow the online instructions for submitting comments.
- *Fax:* 202–493–2251.
- *Mail or Hand Delivery:* Docket Management, U.S. Department of Transportation, 1200 New Jersey Avenue SE., West Building, Room W12–140, Washington, DC 20590, between 9 a.m. and 5 p.m., Monday through Friday, except on Federal holidays.

Instructions: For detailed instructions on submitting comments and additional information on the rulemaking process, see the Supplementary Information section of this document. Note that all comments received will be posted without change to *http://www.regulations.gov,* including any personal information provided. Please see the Privacy Act heading below.

Privacy Act: Anyone is able to search the electronic form of all comments received into any of our dockets by the name of the individual submitting the comment (or signing the comment, if submitted on behalf of an association, business, labor union, etc.). You may review DOT's complete Privacy Act Statement in the **Federal Register** published on April 11, 2000 (65FR 19477–78) or you may visit *http://Docket Info.dot.gov.*

Docket: For access to the docket to read background documents or comments received, go to the street address listed above. The internet access to the docket will be at *http://www.regulations.gov.* Follow the online instructions for accessing the dockets.

FOR FURTHER INFORMATION CONTACT: Michael Pyne, 202–366–4171, Office of Rulemaking (NVS–123), 1200 New Jersey Avenue SE., Room W43–457, Washington, DC 20590.

SUPPLEMENTARY INFORMATION: Under the Paperwork Reduction Act of 1995, before an agency submits a proposed collection of information to OMB for approval, it must first publish a document in the **Federal Register** providing a 60-day comment period and otherwise consult with members of the public and affected agencies concerning each proposed collection of information. The OMB has promulgated regulations describing what must be included in such a document. Under OMB's regulation (at 5 CFR 1320.8(d)), an agency must ask for public comment on the following:

(i) Whether the proposed collection of information is necessary for the proper

performance of the functions of the agency, including whether the information will have practical utility;

(ii) The accuracy of the agency's estimate of the burden of the proposed collection of information, including the validity of the methodology and assumptions used;

(iii) How to enhance the quality, utility, and clarity of the information to be collected and;

(iv) How to minimize the burden of the collection of information on those who are to respond, including the use of appropriate automated, electronic, mechanical, or other technological collection techniques or other forms of information technology, *e.g.,* permitting electronic submission of responses.

In compliance with these requirements, NHTSA asks for public comments on the following proposed collections of information:

Title: 49 CFR 571.403, ''Platform lift systems for motor vehicles,'' and 49 CFR 571.404, ''Platform lift installations in motor vehicles.''

OMB Control Number: 2127–0621.

Form Number: None.

Background

FMVSS No. 403 establishes minimum performance standards for platform lifts intended for installation in motor vehicles to assist wheelchair users and other persons with limited mobility in entering and leaving a vehicle. The standard's purpose is to prevent injuries and fatalities to passengers and bystanders during the operation of platform lifts. The related standard FMVSS No. 404, places specific requirements on vehicle manufacturers or alterers who install platform lifts in new vehicles. Lift manufacturers must certify that their lifts meet the requirements of FMVSS No. 403 and must declare in the owner's manual, the installation instructions, and on the operating instruction label that the lift is certified. Certification of compliance with FMVSS No. 404 is included on the vehicle certification label required on all motor vehicles under part 567 of 49 CFR. As a result of the requirements in the two standards, lift manufacturers must produce an insert that is placed in the vehicle owner's manual. They also must produce lift installation instructions, as well as either one or two labels, to be placed near the controls for the lift. The latter illustrate and describe procedures for operating the lift.

Our estimates of burden and cost to lift manufacturers to meet these requirements are given below. There is no burden to the general public.

Respondents: Platform lift manufacturers and vehicle manufacturers/alterers that install platform lifts in new motor vehicles before first vehicle sale.

Estimated Number of Respondents: 10.

Estimated Annual Burden

- Estimated burden for lift manufacturers to produce an insert for vehicle owner manuals stating the lift's platform operating volume, maintenance schedule, and lift operating procedures, as applicable: 10 manufacturers × 24 hrs. amortized over 5 yrs. = 48 hours per year.
- Estimated burden for lift manufacturers to produce installation instructions identifying the types of vehicles on which a lift is designed to be installed: 10 manufacturers × 24 hrs. amortized over 5 yrs. = 48 hours per year.
- Estimated burden for lift manufacturers to produce a placard and/or labeling on or near the lift control panel to identify the operating functions: 10 manufacturers × 24 hrs. amortized over 5 yrs. = 48 hours per year.
- Estimated burden for lift manufacturers to produce a placard and/or labeling on or near the lift control panel to identify the lift backup operating procedures: 10 manufacturers × 24 hrs. amortized over 5 yrs. = 48 hours per year.

Estimated Cost to Lift Manufacturers To Produce

- Owner's manual insert—27, 398 lifts × $0.04 per page × 1 page = $1,095.92.
- Lift installation instructions—27,398 lifts × $0.04 per page × 1 page [1] = $1,095.92.
- Labeling/placard for lift operating procedures—27,398 lifts × $0.13 per label = $3,561.74.
- Labeling/placard for lift backup operating procedures—27,398 lifts × $0.13 per label = $3,561.74.

Total estimated number of respondents: 10.

Total estimated hour burden per year = 192 hours.

Total estimated annual cost = $9,315.32.

Public Comments: You are asked to comment on any aspect of this information collection, including (a) whether the proposed collection of information is necessary for the Department's performance; (b) the accuracy of the estimated burden; (c) ways for the Department to enhance the quality, utility and clarity of the information collection; and (d) ways that the burden could be minimized without reducing the quality of the collected information. The agency will summarize and/or include your comments in the request for OMB's clearance of this information collection.

Authority: The Paperwork Reduction Act of 1995; 44 U.S.C. chapter 35, as amended; and 49 CFR 1.48.

Raymond R. Posten,

Associate Administrator for Rulemaking.

[FR Doc. 2015–08961 Filed 4–17–15; 8:45 am]

BILLING CODE 4910–59–P

[1] Although lift installation instructions are considerably more than one page, lift manufacturers already provide lift installation instructions in the normal course of business and one additional page should be adequate to allow the inclusion of specific information required by NHTSA regulations.

DEPARTMENT OF TRANSPORTATION

National Highway Traffic Safety Administration

[Docket No. NHTSA–2015–0021]

Notice of Buy America Waiver

AGENCY: National Highway Traffic Safety Administration (NHTSA), Department of Transportation (DOT).

ACTION: Notice of Buy America waiver.

SUMMARY: This notice provides NHTSA's finding that a waiver of the Buy America requirement is appropriate for the purchase of Radian model 120 convertible car seats by the New Hampshire Highway Safety Agency, using Federal grant funds. NHTSA finds that a non-availability waiver of the Buy America requirement is appropriate for the purchase of these car seats using Federal highway safety grant funds because there are no suitable products produced in the United States.

DATES: The effective date of this waiver is April 30, 2015. Written comments regarding this notice may be submitted to NHTSA and must be received on or before: May 5, 2015.

ADDRESSES: Written comments may be submitted using any one of the following methods:

- *Mail:* Docket Management Facility, M–30, U.S. Department of Transportation, West Building, Ground Floor, Rm. W12–140, 1200 New Jersey Avenue SE., Washington, DC 20590.
- *Fax:* Written comments may be faxed to (202) 493–2251.
- *Internet:* To submit comments electronically, go to the Federal regulations Web site at *http://www.regulations.gov.* Follow the online instructions for submitting comments.
- *Hand Delivery:* West Building Ground Floor, Room W12–140, 1200

New Jersey Avenue SE., between 9 a.m. and 5 p.m. Eastern Time, Monday through Friday, except Federal holidays.

Instructions: All comments submitted in relation to this waiver must include the agency name and docket number. Please note that all comments received will be posted without change to *http://www.regulations.gov,* including any personal information provided. You may also call the Docket at 202–366–9324.

FOR FURTHER INFORMATION CONTACT: For program issues, contact Barbara Sauers, Office of Regional Operations and Program Delivery, NHTSA (phone: 202–366–0144). For legal issues, contact Andrew DiMarsico, Office of Chief Counsel, NHTSA (phone: 202–366–5263). You may send mail to these officials at the National Highway Traffic Safety Administration, 1200 New Jersey Avenue SE., Washington, DC 20590.

SUPPLEMENTARY INFORMATION: This notice provides NHTSA's finding that a waiver of the Buy America requirements, 23 U.S.C. 313, is appropriate for the New Hampshire Highway Safety Agency to purchase 20 Radian model 120 convertible car seats using grant funds authorized under 23 U.S.C. 402 (section 402). Section 402 funds are available for use by State Highway Safety Programs that, among other things, encourage the proper use of occupant protection devices, including child restraint systems. 23 U.S.C. 402(a).

Buy America provides that NHTSA ''shall not obligate any funds authorized to be appropriated to carry out the Surface Transportation Assistance Act of 1982 (96 Stat. 2097) or [Title 23] and administered by the Department of Transportation, unless steel, iron, and manufactured products used in such project are produced in the United States.'' 23 U.S.C. 313. However, NHTSA may waive this requirement if ''(1) its application would be inconsistent with the public interest; (2) such materials and products are not produced in the United States in sufficient and reasonably available quantities and of a satisfactory quality; or (3) the inclusion of domestic material will increase the cost of the overall project contract by more than 25 percent.'' 23 U.S.C. 313(b). In this instance, NHTSA has determined that a waiver is appropriate for the purchase of Radian Model 120 convertible car seats because there is no comparable product produced domestically that meets the need identified by the New Hampshire Highway Safety Agency—specifically, child seats that can safely transport children from 5 to 80 pounds in the patient compartment of an ambulance and that occupy minimal space in the ambulance when not in use.

The New Hampshire Highway Safety Agency seeks a waiver for one of its grantees, the New Hampshire Emergency Medical Services for Children Program (EMSC), to purchase 20 Radian car seats for use by ambulance services throughout New Hampshire. The Radian model 120 convertible car seat was selected by these programs because it has a 5 to 80 pound weight allowance, which meets the equipment requirements in Chapter Saf-C 5900 of the New Hampshire Emergency Medical Services Rules. The New Hampshire Highway Safety Agency states that the selected model is preferred because the car seat folds flat, limiting the storage space it occupies. The New Hampshire Highway Safety Agency further notes that the New Hampshire rules specify an extensive list of equipment that must be included in an ambulance, and that ambulance services have stated that there is insufficient space to store typical child seats that do not fold.

The New Hampshire Highway Safety Agency notes that ''Working Group Best-Practice Recommendations for the Safe Transportation of Children in Emergency Ground Ambulances,'' issued by NHTSA in September 2012, recommends that children transported by ambulance are secured using a size-appropriate child restraint system in either the cot (stretcher) or the captain's chair. The Radian model is convertible and can be used on the ambulance cot and the captain's chair to secure children up to 80 pounds in a 5-point harness. Finally, the Radian Model 120 has a steel alloy frame that gives the seat a life span of 10 years.

The model, sold through the Diono Company, retails for approximately $240 per seat. It is manufactured in China.

NHTSA conducted an assessment of available child restraints and is not aware of a comparable child seat produced in the United States. The Radian model 120 seat is unique in the child seat market because it can safely secure children from 5 to 80 pounds in the captain's chair or cot of an ambulance and can fold to create a thin profile, minimizing necessary storage space in an ambulance. NHTSA is not aware of any domestically-produced child seats on the market that are convertible, have a 5 to 80 pound weight allowance, and fold to create a thin profile. NHTSA was able to locate one domestically-produced convertible car seat, the Safety 1st 3-in-1 Elite Air 80 Convertible Car Seat, which has a 5 to 80 pound weight allowance and a steel frame and can secure children up to 80 pounds in the harness. However, the Elite Air 80 does not fold to create a thin profile. Although this car seat is made in the United States, NHTSA believes it is not comparable to the Radian Model 120 because it does not fold to create a thin profile, which is a factor because ambulance services have stated that there is insufficient space to store typical child seats that do not fold.

Since a child seat that meets the requirements identified by the New Hampshire Highway Safety Agency is unavailable from a domestic manufacturer, the Buy America waiver is appropriate. NHTSA invites public comment on this conclusion.

In light of the above discussion, and pursuant to 23 U.S.C. 313(b)(2), NHTSA finds that it is appropriate to grant a waiver from the Buy America requirement to the New Hampshire Highway Safety Agency to purchase Radian Model 120 child seats. This waiver applies to New Hampshire and all other States seeking to use section 402 funds to purchase Radian Model 120 child seats for the purposes mentioned herein. These waivers will continue through fiscal year 2015 and will allow the purchase of these items as required by the New Hampshire Highway Safety Agency. Accordingly, this waiver will expire at the conclusion of fiscal year 2015 (September 30, 2015). In accordance with the provisions of Section 117 of the Safe, Accountable, Flexible, Efficient Transportation Equity Act: A Legacy of Users Technical Corrections Act of 2008 (Pub. L. 110–244, 122 Stat. 1572), NHTSA is providing this notice as its finding that a waiver of the Buy America requirement is appropriate. Written comments on this finding may be submitted through any of the methods discussed above. NHTSA may reconsider this finding if through the comments it learns of and can confirm the existence of a comparable domestically made product to the Radian Model 120 child seat.

This finding should not be construed as an endorsement or approval of the products by NHTSA or the U.S. Department of Transportation. The United States Government does not endorse products or manufacturers.

Authority: 23 U.S.C. 313; Pub. L. 110–161.

Issued in Washington, DC, under authority delegated in 49 CFR 1.95.

Stephen P. Wood,

Acting Chief Counsel.

[FR Doc. 2015–08954 Filed 4–17–15; 8:45 am]

BILLING CODE 4910–59–P

DEPARTMENT OF TRANSPORTATION

National Highway Traffic Safety Administration

[Docket No. NHTSA–2015–0020]

Notice of Buy America Waiver

AGENCY: National Highway Traffic Safety Administration (NHTSA), Department of Transportation (DOT).

ACTION: Notice of Buy America waiver.

SUMMARY: This notice provides NHTSA's finding with respect to a request to waive the requirements of Buy America from the New York Governor's Traffic Safety Committee (GTSC). NHTSA finds that a non-availability waiver of the Buy America requirement is appropriate for the purchase of 205 Samsung Galaxy Note 10.1 Tablet packages using Federal highway traffic safety grant funds because there are no suitable products produced in the United States.

DATES: The effective date of this waiver is April 30, 2015. Written comments regarding this notice may be submitted to NHTSA and must be received on or before: May 5, 2015.

ADDRESSES: Written comments may be submitted using any one of the following methods:

- *Mail:* Docket Management Facility, M–30, U.S. Department of Transportation, West Building, Ground Floor, Rm. W12–140, 1200 New Jersey Avenue SE., Washington, DC 20590.
- *Fax:* Written comments may be faxed to (202) 493–2251.
- *Internet:* To submit comments electronically, go to the Federal regulations Web site at *http://www.regulations.gov.* Follow the online instructions for submitting comments.
- *Hand Delivery:* West Building Ground Floor, Room W12–140, 1200 New Jersey Avenue SE., between 9 a.m. and 5 p.m. Eastern Time, Monday through Friday, except Federal holidays.

Instructions: All comments submitted in relation to this waiver must include the agency name and docket number. Please note that all comments received will be posted without change to *http://www.regulations.gov,* including any personal information provided. You may also call the Docket at 202–366–9324.

FOR FURTHER INFORMATION CONTACT: For program issues, contact Barbara Sauers, Office of Regional Operations and Program Delivery, NHTSA (phone: 202–366–0144). For legal issues, contact Andrew DiMarsico, Office of Chief Counsel, NHTSA (phone: 202–366–5263). You may send mail to these officials at the National Highway Traffic Safety Administration, 1200 New Jersey Avenue SE., Washington, DC 20590.

SUPPLEMENTARY INFORMATION: This notice provides NHTSA's finding that a waiver of the Buy America requirement, 23 U.S.C. 313, is appropriate for New York's GTSC to purchase Samsung Galaxy Note 10.1 (2014 Edition) Tablet packages using grant funds authorized under 23 U.S.C. 405(d) (section 405) and its predecessor, 23 U.S.C. 410(d) (section 410).[1] Section 405(d) funds are available for use by State highway safety programs to support effective programs to reduce driving under the influence of alcohol, drugs, or the combination of alcohol and drugs, including enforcement efforts. 23 U.S.C. 405(d). States may use Section 405(d) grant funds for drug recognition expert training for law enforcement and equipment and related expenditures used in connection with impaired driving enforcement. States may use Section 410 grant funds for the procurement of technology and equipment, including video equipment and passive alcohol sensors, to counter directly impaired operation of motor vehicles.

Buy America provides that NHTSA ''shall not obligate any funds authorized to be appropriated to carry out the Surface Transportation Assistance Act of 1982 (96 Stat. 2097) or [Title 23] and administered by the Department of Transportation, unless steel, iron, and manufactured products used in such project are produced in the United States.'' 23 U.S.C. 313. However, NHTSA may waive those requirements if ''(1) their application would be inconsistent with the public interest; (2) such materials and products are not produced in the United States in sufficient and reasonably available quantities and of a satisfactory quality; or (3) the inclusion of domestic material will increase the cost of the overall project contract by more than 25 percent.'' 23 U.S.C. 313(b). In this instance, NHTSA has determined that non-availability waivers are appropriate for the tablet packages that New York's GTSC seeks to purchase using Federal grant funds.

The GTSC seeks a waiver to purchase 205 Samsung Galaxy Note 10.1 Tablet packages, including a tablet, power cord, HD card, and case, at $529 per unit to be used by New York's Drug Recognition Experts (DREs) to conduct drug impaired driving evaluations in the field. New York tested three tablets, including the Samsung Note, a Lenovo ThinkPad, and an Asus, to determine which tablet was best suited to meet the GTSC's needs. All of the tablets tested are manufactured outside the United States: The Samsung tablet tested is made in Vietnam, and the ThinkPad and Asus tablets are made in China. New York states that the most important feature needed on the tablet is a stylus that is capable of drawing clear graphics related to the various tests conducted during the course of an evaluation. New York states that the stylus is important because the DREs need a drawing capability to fill out the multiple images on a Drug Influence Evaluation form. For example, DREs may use a stylus to draw dots on a diagram of an arm to signify drug track marks and to indicate on a diagram the exact location a suspect touches on his or her face when asked to touch a finger to the nose or other areas on the face. New York states that a stylus is necessary to perform these tasks. Further, a stylus will enable a DRE to use these tablet functions while wearing gloves in cold field conditions.

The Samsung Galaxy Note 10.1 was selected by GTSC because it has an S Pen that, according to New York, allows for smooth writing and drawing. The Samsung Note is also preferred because the Samsung S Pen has a dedicated slot in the tablet and does not require additional batteries, such that it is lighter than other actively digitized styluses. The Samsung Note has an 8 megapixel camera with flash and can take videos. It has a 2560 x 1600 pixel resolution that is able to distinguish between a finger and a stylus and can display its screen onto a television using an HDMI adapter. It has a quad core 1.3 GHz processor and 3 GB of ram. It also has a 32 GB hard drive, which New York states is needed to ensure that the DREs do not run out of space. New York also states that the Samsung Note has a more than 9 hour battery life when in use and can last up to 200 hours while idling. Finally, the Samsung Note is an Android device that runs on the Android KitKat 4.4.2 operating system, which is compatible with the application that will be used by DREs to capture evaluation data in the field on the tablets that the DREs will then upload to the DRE database.

New York's GTSC conducted phone calls, emails, and web searches, but was unable to identify any domestically manufactured tablet packages. NHTSA

[1] 23 U.S.C. 410 was repealed by the Moving Ahead for Progress in the 21st Century (MAP–21) Act, Public Law 112–141 section 31109(d), 126 Stat. 756 (2012), and recodified at 23 U.S.C. 405(d).

conducted similar assessments [2] and was unable to locate domestic manufacturers of tablet packages with the specifications required by New York's GTSC. Through this assessment, NHTSA learned that Union Built PC, a Maryland-based hardware and software company, assembles tablets in the United States.[3] Union Built PC produces one tablet, the UBW–Q410. The UBW–Q410 runs on an Android 4.1.1 operating system. It has a 1.5 GHz Quad Core processor and 3 GB of ram. It has a max resolution of 1280 x 800 pixels and a 5 megapixel camera. Unlike the Samsung Note, the UBW–Q410 is not sold with a stylus. Customers may purchase this tablet through Union Built PC's Web site. Although this tablet is made in the United States, it appears insufficient to meet the New York GTSC's purposes because it is not designed for use with a stylus. Since NHTSA agrees that a tablet package that meets the requirements identified by GTSC for use by its DREs is unavailable from a domestic manufacturer, the Buy America waiver is appropriate. NHTSA invites public comment on this conclusion.

In light of the above discussion, and pursuant to 23 U.S.C. 313(b)(2), NHTSA finds that it is appropriate to grant a waiver from the Buy America requirements to GTSC in order to purchase 205 Samsung Galaxy Note Tablets. This waiver applies to New York and all other States seeking to use section 405(d) and eligible section 410 funds to purchase Samsung Galaxy Note 10.1 Tablet packages for the purposes mentioned herein. This waiver will continue through fiscal year 2015 and will allow the purchase of these items as required for New York's GTSC. Accordingly, this waiver will expire at the conclusion of fiscal year 2015 (September 30, 2015). In accordance with the provisions of Section 117 of the Safe, Accountable, Flexible, Efficient Transportation Equity Act: A Legacy of Users Technical Corrections Act of 2008 (Pub. L. 110–244, 122 Stat. 1572), NHTSA is providing this notice as its finding that a waiver of the Buy America requirements is appropriate for the Samsung Galaxy Note Tablet packages.

Written comments on this finding may be submitted through any of the methods discussed above. NHTSA may reconsider this finding if, through comment, it learns of additional relevant information regarding its decision to grant the New York GTSC's waiver request.

This finding should not be construed as an endorsement or approval of any products by NHTSA or the U.S. Department of Transportation. The United States Government does not endorse products or manufacturers.

Authority: 23 U.S.C. 313; Pub. L. 110–161.

Issued in Washington, DC, under authority delegated in 49 CFR 1.95.

Stephen P. Wood,

Acting Chief Counsel.

[FR Doc. 2015–08955 Filed 4–17–15; 8:45 am]

BILLING CODE 4910–59–P

[2] NHTSA conducted internet searches and reviewed several Web sites that catalog domestic made products: *www.usaonly.us; www.americansworking.com; www.madeinamericaforever.com; www.unionbuiltpc.com; www.madeinusa.org;* and *www.computersmadeinusa.com.*

[3] Union Built PC's internet Web site states that final assembly and/or configuration of its products occur in the United States and that it uses foreign and domestic parts.

DEPARTMENT OF TRANSPORTATION

National Highway Traffic Safety Administration

[Docket No. NHTSA–2015–0019]

Notice of Buy America Waiver

AGENCY: National Highway Traffic Safety Administration (NHTSA), Department of Transportation (DOT).

ACTION: Notice of Buy America waiver.

SUMMARY: This notice provides NHTSA's finding that a non-availability waiver of the Buy America requirements is appropriate for the purchase of consumer-use motorcycle helmets by the Florida Department of Transportation (FDOT), using Federal grant funds. NHTSA has determined that a waiver is appropriate because there are no suitable motorcycle helmets produced in the United States that are designed for consumer-use.

DATES: The effective date of this waiver is April 30, 2015. Written comments regarding this notice may be submitted to NHTSA and must be received on or before: May 5, 2015.

ADDRESSES: Written comments may be submitted using any one of the following methods:

- *Mail:* Docket Management Facility, M–30, U.S. Department of Transportation, West Building, Ground Floor, Rm. W12–140, 1200 New Jersey Avenue SE., Washington, DC 20590.
- *Fax:* Written comments may be faxed to (202) 493–2251.
- *Internet:* To submit comments electronically, go to the Federal regulations Web site at *http://www.regulations.gov.* Follow the online instructions for submitting comments.
- *Hand Delivery:* West Building Ground Floor, Room W12–140, 1200 New Jersey Avenue SE., between 9 a.m. and 5 p.m. Eastern Time, Monday through Friday, except Federal holidays.

Instructions: All comments submitted in relation to this waiver must include the agency name and docket number. Please note that all comments received will be posted without change to *http://www.regulations.gov,* including any personal information provided. You may also call the Docket at 202–366–9324.

FOR FURTHER INFORMATION CONTACT: For program issues, contact Barbara Sauers, Office of Regional Operations and Program Delivery, NHTSA (phone: 202–366–0144). For legal issues, contact Andrew DiMarsico, Office of Chief Counsel, NHTSA (phone: 202–366–5263). You may send mail to these officials at National Highway Traffic Safety Administration, 1200 New Jersey Avenue SE., Washington, DC 20590.

SUPPLEMENTARY INFORMATION: This notice provides NHTSA's finding that a waiver of the Buy America requirements, 23 U.S.C. 313, is appropriate for the Florida Department of Transportation (FDOT) to purchase approximately 239 consumer-use motorcycle helmets, using grant funds authorized under 23 U.S.C. 402 (section 402) and 23 U.S.C. 403 (section 403).[1] Section 402 funds are available for use by State Highway Safety Programs that, among other things, aim to reduce injuries and deaths resulting from motorcycle accidents. 23 U.S.C. 402(a). Section 403 funds are available for use by State Highway Safety Research and Development Activities including research of motorcyclist characteristics and safety. 23 U.S.C. 403. The Buy America provision states that NHTSA ''shall not obligate any funds authorized to be appropriated to carry out the Surface Transportation Assistance Act of 1982 (96 Stat. 2097) or [Title 23] and administered by the Department of Transportation, unless steel, iron, and manufactured products used in such project are produced in the United States.'' 23 U.S.C. 313. However, NHTSA may waive those requirements if (1) their application would be inconsistent with the public interest; (2) such materials and products are not produced in the United States in sufficient and reasonably available quantities and of a satisfactory quality;

[1] In October 2014, FDOT submitted a request to waive Buy America for the purchase of motorcycle helmets using section 403 funds only. This notice responds to a January 2015 waiver request that superseded the October 2014 request and seeks a waiver to use both sections 402 and 403 funds.

or (3) the inclusion of domestic material will increase the cost of the overall project contract by more than 25 percent. 23 U.S.C. 313(b). In this instance, NHTSA has determined that a waiver is appropriate for the purchase of the consumer-use motorcycle helmets because there is no sufficient product produced domestically that meets the need identified by FDOT.

FDOT seeks a waiver to purchase motorcycle helmets for use by its program called ''The Demonstration to Promote Motorcycle Helmet Use,'' and other motorcycle safety education and injury prevention programs. FDOT requests to purchase a maximum of 150 helmets using Section 403 funds and 85 helmets using Section 402 funds at a per unit cost of $100 to $150. FDOT also plans to purchase 4 consumer-use helmets for law enforcement officers using Section 402 funds at an estimated cost of $300 each. Although the State of Florida does not require motorcyclists to wear a helmet, Florida aims to increase helmet use through alternate efforts, such as raffles for helmets and exchanges that allow motorcyclists to receive DOT-compliant helmets for trading in non-DOT-compliant helmets. FDOT seeks to use Federal grant funds to purchase motorcycle helmets for use during these outreach activities at motorcycle rallies and events. FDOT will use the motorcycle helmets to encourage participation in its helmet safety education programs, focus groups, and surveys at these events. FDOT states that its proposed helmet drawings and exchange program will incentivize the use of helmets within the segment of the motorcycle rider community that is suspicious of the safety benefits of helmet use. FDOT also seeks to use Federal grant funds to purchase 2 helmets for use by law enforcement officers on the Florida State University Police Department motorsports team to promote motorcycle safety and discourage illegal street racing and 2 helmets for use by law enforcement officers to blend in with other motorcyclists during law enforcement activities.

FDOT seeks to use these motorcycle helmets for its program because they are designed specifically for consumers. FDOT believes that using these motorcycle helmets as an incentive should encourage and increase the use of helmets within the motorcycling community. Florida is unable to identify, however, any motorcycle helmets that meet the Buy America requirements. FDOT conducted phone calls and web searches but was unable to find an American made motorcycle helmet.

NHTSA is aware of only one brand of consumer-use motorcycle helmet that is produced in the United States: Super Seer Corporation (Seer), a Colorado-based custom motorcycle helmet manufacturer. Seer primarily produces helmets for law enforcement. It also makes one model (Seer Touring Helmet) for public use. The Seer helmet is not offered to the general public through retail outlets. These custom motorcycle helmets are not mass produced, rather they are hand-made to order.[2] Consumers may purchase a custom helmet through Seer's Internet Web site. Although these helmets are made in the United States, NHTSA believes they are not produced in sufficient and reasonably available quantities for FDOT's purposes. NHTSA is not aware of any other motorcycle helmets produced in the United States. Though there are other American-based companies in this business, they manufacture their motorcycle helmets overseas. NHTSA assessed approximately forty motorcycle helmet brands and manufacturers, including HJC, Bell, and MHR. NHTSA found that all the companies produce their helmets overseas, in locations such as China, Taiwan, and Italy. Since consumer-use motorcycle helmets are unavailable from an American manufacturer in reasonably available quantities, the Buy America waiver is appropriate. NHTSA invites public comment on this conclusion.

In light of the above discussion, and pursuant to 23 U.S.C. 313(b)(2), NHTSA finds that it is appropriate to grant a waiver from the Buy America requirements to FDOT in order to purchase approximately 239 consumer-use motorcycle helmets. This non-availability waiver applies to Florida and all other States seeking to use section 402 and section 403 funds to purchase motorcycle helmets for the purposes mentioned herein. The waiver will continue through fiscal year 2015 and will allow the purchase of off-the-shelf consumer motorcycle helmets required for Florida's demonstration motorcycle helmet program and other motorcycle safety and research programs. Accordingly, this waiver will expire at the conclusion of fiscal year 2015 (September 30, 2015). In accordance with the provisions of Section 117 of the Safe, Accountable, Flexible, Efficient Transportation Equity Act: A Legacy of Users Technical Corrections Act of 2008 (Pub. L. 110–244, 122 Stat. 1572), NHTSA is providing this notice as its finding that a waiver of the Buy America requirements is appropriate. Written comments on this finding may be submitted through any of the methods discussed above. NHTSA may reconsider these findings, if through comment, it learns of and can confirm the existence of a comparable domestically made product to the items granted a waiver.

These findings should not be construed as an endorsement or approval of any products by NHTSA or the U.S. Department of Transportation. The United States Government does not endorse products or manufacturers.

Authority: 23 U.S.C. 313; Public Law 110–161.

Issued in Washington, DC, under authority delegated in 49 CFR 1.95.

Stephen P. Wood,

Acting Chief Counsel.

[FR Doc. 2015–08953 Filed 4–17–15; 8:45 am]

BILLING CODE 4910–59–P

[2] The custom-made Seer touring helmet is much more expensive than other helmets that are sold in stores.

DEPARTMENT OF THE TREASURY

Internal Revenue Service

Proposed Collection; Comment Request for Regulation Project

AGENCY: Internal Revenue Service (IRS), Treasury.

ACTION: Notice and request for comments.

SUMMARY: The Department of the Treasury, as part of its continuing effort to reduce paperwork and respondent burden, invites the general public and other Federal agencies to take this opportunity to comment on proposed and/or continuing information collections, as required by the Paperwork Reduction Act of 1995, Public Law 104–13 (44 U.S.C. 3506(c)(2)(A)). Currently, the IRS is soliciting comments concerning, Miscellaneous Sections Affected by the Taxpayer Bill of Rights 2 and the Personal Responsibility and Work Opportunity Reconciliation Act of 1996.

DATES: Written comments should be received on or before June 19, 2015 to be assured of consideration.

ADDRESSES: Direct all written comments to Christie A. Preston, Internal Revenue Service, Room 6129, 1111 Constitution Avenue NW., Washington, DC 20224.

FOR FURTHER INFORMATION CONTACT: Requests for additional information or copies of the regulation should be directed to Martha R. Brinson, Internal Revenue Service, Room 6129, 1111 Constitution Avenue NW., Washington,

DC 20224 or through the Internet at *Martha.R.Brinson@irs.gov.*

SUPPLEMENTARY INFORMATION:

Title: Miscellaneous Sections Affected by the Taxpayer Bill of Rights 2 and the Personal Responsibility and Work Opportunity Reconciliation Act of 1996.

OMB Number: 1545–1356.

Regulation Project Number: TD 8725.

Abstract: Under Internal Revenue Code section 7430 a prevailing party may recover the reasonable administrative or litigation costs incurred in an administrative or civil proceeding that relates to the determination, collection, or refund of any tax, interest, or penalty. Section 301.7430–2(c) of the regulation provides that the IRS will not award administrative costs under section 7430 unless the taxpayer files a written request in accordance with the requirements of the regulation.

Current Actions: There is no change to this existing regulation.

Type of Review: Extension of a currently approved collection.

Affected Public: Individuals or households, and business or other for-profit organizations, not-for-profit institutions, farms, and the Federal government.

Estimated Number of Respondents: 38.

Estimated Time per Respondent: 2 hours, 16 minutes.

Estimated Total Annual Burden Hours: 86.

The following paragraph applies to all of the collections of information covered by this notice:

An agency may not conduct or sponsor, and a person is not required to respond to, a collection of information unless the collection of information displays a valid OMB control number. Books or records relating to a collection of information must be retained as long as their contents may become material in the administration of any internal revenue law. Generally, tax returns and tax return information are confidential, as required by 26 U.S.C. 6103.

Request for Comments: Comments submitted in response to this notice will be summarized and/or included in the request for OMB approval. All comments will become a matter of public record. Comments are invited on: (a) Whether the collection of information is necessary for the proper performance of the functions of the agency, including whether the information shall have practical utility; (b) the accuracy of the agency's estimate of the burden of the collection of information; (c) ways to enhance the quality, utility, and clarity of the information to be collected; (d) ways to minimize the burden of the collection of information on respondents, including through the use of automated collection techniques or other forms of information technology; and (e) estimates of capital or start-up costs and costs of operation, maintenance, and purchase of services to provide information.

Approved: April 14, 2015.

Christie A. Preston,

IRS Reports Clearance Officer.

[FR Doc. 2015–08905 Filed 4–17–15; 8:45 am]

BILLING CODE 4830–01–P

DEPARTMENT OF THE TREASURY

Advisory Committee on Risk-Sharing Mechanisms To Voluntarily Reinsure Against Losses From Acts of Terrorism

AGENCY: Departmental Offices, U.S. Department of the Treasury.

ACTION: Notice.

SUMMARY: The Department of the Treasury (Treasury) seeks applications from individuals who wish to serve on the advisory committee on risk-sharing mechanisms to voluntarily reinsure against losses from acts of terrorism in order to encourage the growth of nongovernmental, private market reinsurance capacity for protection against losses from acts of terrorism.

DATES: *Application due date:* May 20, 2015.

FOR FURTHER INFORMATION CONTACT: Brett D. Hewitt, Policy Advisor, Federal Insurance Office, Room 1410, Department of the Treasury, 1500 Pennsylvania Avenue NW., Washington, DC 20220, at (202) 622–5892 (this is not a toll-free number). Persons who have difficulty hearing or speaking may access this number via TTY by calling the toll-free Federal Relay Service at (800) 877–8339.

SUPPLEMENTARY INFORMATION: Pursuant to section 110 of the Terrorism Risk Insurance Program Reauthorization Act of 2015,[1] and the Federal Advisory Committee Act,[2] Treasury established the advisory committee on risk-sharing mechanisms to voluntarily reinsure against losses from acts of terrorism (Advisory Committee). In general, the Advisory Committee serves to present advice and recommendations to the Federal Insurance Office (FIO) with respect to the creation and development of nongovernmental risk-sharing mechanisms that encourage the growth of private market reinsurance capacity for protection against losses arising from acts of terrorism. Under the Federal Insurance Office Act of 2010, FIO has the authority to assist the Secretary of the Treasury in administering the Terrorism Risk Insurance Program.[3]

I. Scope and Membership of the Advisory Committee

The Advisory Committee was established to provide an opportunity for directors, officers, or other employees of insurers, reinsurers, or capital market participants that are participating or that desire to participate in nongovernmental risk-sharing mechanisms related to terrorism risk, to periodically offer views directly to FIO. The duties of the Advisory Committee shall be solely advisory, and any advice and recommendations of the Advisory Committee shall not be binding on FIO.

The Advisory Committee is a nine-member committee.

II. Application for Advisory Committee

Treasury seeks applications from directors, officers, or other employees of insurers, reinsurers, or capital market participants that are participating or that desire to participate in nongovernmental risk-sharing mechanisms related to reinsurance for losses arising from acts of terrorism.

To apply, an applicant must submit an appropriately detailed resumé and a cover letter that includes a brief description of the applicant's reason for applying. An applicant must state in the applicant's materials that he or she agrees to submit to a pre-appointment tax and criminal background investigation in accordance with Treasury Directive 21–03. Applications should be addressed to Brett Hewitt and sent via email to *Brett.Hewitt@treasury.gov.* The deadline for submitting applications is May 20, 2015.

Michael T. McRaith,

Director, Federal Insurance Office.

[FR Doc. 2015–08978 Filed 4–17–15; 8:45 am]

BILLING CODE 4810–25–P

[1] Pub. L. 114–1, § 110.

[2] 5 U.S.C. App. 2, § 1–16, as amended.

[3] 31 U.S.C. 313(c)(1)(D).

U.S.-CHINA ECONOMIC AND SECURITY REVIEW COMMISSION

Notice of Open Public Hearing

AGENCY: U.S.-China Economic and Security Review Commission.

ACTION: Notice of open public hearing—April 22, 2015, Washington, DC.

SUMMARY: Notice is hereby given of the following hearing of the U.S.-China

Economic and Security Review Commission.

Name: William A. Reinsch, Chairman of the U.S.-China Economic and Security Review Commission. The Commission is mandated by Congress to investigate, assess, and report to Congress annually on ''the national security implications of the economic relationship between the United States and the People's Republic of China.'' Pursuant to this mandate, the Commission will hold a public hearing in Washington, DC on April 22, 2015, on ''China ahead of the 13th Five-Year Plan: Competitiveness and Market Reform.''

DATES: *Location, Date and Time:* Room: TBA. Wednesday, April 22, 2015, 9 a.m.–3 p.m. A detailed agenda for the hearing will be posted to the Commission's Web site at *www.uscc.gov.* Also, please check our Web site for possible changes to the hearing schedule. *Reservations are not required to attend the hearing.*

FOR FURTHER INFORMATION CONTACT: Any member of the public seeking further information concerning the hearing should contact Reed Eckhold, 444 North Capitol Street NW., Suite 602, Washington, DC 20001; phone: 202–624–1496, or via email at *reckhold@uscc.gov. Reservations are not required to attend the hearing.*

SUPPLEMENTARY INFORMATION:

Background: This is the fifth public hearing the Commission will hold during its 2015 report cycle to collect input from academic, industry, and government experts on national security implications of the U.S. bilateral trade and economic relationship with China. This hearing will examine the 12th Five-Year Plan, its effect on China's strategic emerging industries and innovation, and emerging issues related to China's market reform and U.S. competitiveness and their implications for U.S. economic interests. The hearing will be co-chaired by Commissioner Robin Cleveland and Commissioner Michael R. Wessel. Any interested party may file a written statement by April 22, 2015, by mailing to the contact below. A portion of each panel will include a question and answer period between the Commissioners and the witnesses.

Authority: Congress created the U.S.-China Economic and Security Review Commission in 2000 in the National Defense Authorization Act (Pub. L. 106–398), as amended by Division P of the Consolidated Appropriations Resolution, 2003 (Pub. L. 108–7), as amended by Public Law 109–108 (November 22, 2005), as amended by Public Law 113–291 (December 19, 2014).

Dated: April 14, 2015.

Michael Danis,

Executive Director, U.S.-China Economic and Security Review Commission.

[FR Doc. 2015–08899 Filed 4–17–15; 8:45 am]

BILLING CODE 1137–00–P

FEDERAL REGISTER

Vol. 80 Monday,

No. 75 April 20, 2015

Part II

Securities and Exchange Commission

17 CFR Parts 200, 230, 232, *et al.*
Amendments for Small and Additional Issues Exemptions Under the Securities Act (Regulation A); Final Rule

SECURITIES AND EXCHANGE COMMISSION

17 CFR Parts 200, 230, 232, 239, 240, 249, and 260

[Release Nos. 33–9741; 34–74578; 39–2501; File No. S7–11–13]

RIN 3235–AL39

Amendments for Small and Additional Issues Exemptions Under the Securities Act (Regulation A)

AGENCY: Securities and Exchange Commission.

ACTION: Final rules.

SUMMARY: We are adopting amendments to Regulation A and other rules and forms to implement Section 401 of the Jumpstart Our Business Startups (JOBS) Act. Section 401 of the JOBS Act added Section 3(b)(2) to the Securities Act of 1933, which directs the Commission to adopt rules exempting from the registration requirements of the Securities Act offerings of up to $50 million of securities annually. The final rules include issuer eligibility requirements, content and filing requirements for offering statements, and ongoing reporting requirements for issuers in Regulation A offerings.

DATES: The final rules and form amendments are effective on June 19, 2015.

FOR FURTHER INFORMATION CONTACT: Zachary O. Fallon, Special Counsel; Office of Small Business Policy, Division of Corporation Finance, at (202) 551–3460; or Shehzad K. Niazi, Special Counsel; Office of Rulemaking, Division of Corporation Finance, at (202) 551–3430, U.S. Securities and Exchange Commission, 100 F Street NE., Washington, DC 20549–3628.

SUPPLEMENTARY INFORMATION: We are amending Rules 251 through 263 [1] of Regulation A under the Securities Act of 1933 (the ''Securities Act'').[2]

We are revising Form 1–A,[3] rescinding Form 2–A,[4] and adopting four new forms, Form 1–K (annual report), Form 1–SA (semiannual report), Form 1–U (current report), and Form 1–Z (exit report).

Further, we are revising Rule 4a–1 [5] under the Trust Indenture Act of 1939 (the ''Trust Indenture Act'') [6] to increase the dollar ceiling of the exemption from the requirement to issue securities pursuant to an indenture. We are also amending Rule 12g5–1 [7] of the Securities Exchange Act of 1934 (the ''Exchange Act'') [8] to permit issuers to rely on a conditional exemption from mandatory registration of a class of securities under Section 12(g) of the Exchange Act, Rule 15c2–11 [9] of the Exchange Act to permit an issuer's ongoing reports filed under Regulation A to satisfy a broker-dealer's obligations to review and maintain certain information about an issuer's quoted securities, and Rule 30–1 [10] of the Commission's organizational rules and provisions for delegated authority to permit the Division of Corporation Finance to issue notices of qualification and deny Form 1–Z filings. In addition, we are adopting a technical amendment to Exchange Act Rule 15c2–11 to update the outdated reference to ''Schedule H of the By-Laws of the National Association of Securities Dealers, Inc.,'' which is now known as the ''Financial Industry Regulatory Authority, Inc.'' and to reflect the correct rule reference.

As a result of the revisions to Regulation A, we are adopting conforming and technical amendments to Securities Act Rules 157(a),[11] 505(b)(2)(iii),[12] and Form 8–A. Additionally, we are revising Item 101(a) [13] of Regulation S–T [14] to reflect the mandatory electronic filing of all issuer initial filing and ongoing reporting requirements under Regulation A. We are also revising Item 101(c)(6) [15] of Regulation S–T to remove the reference to paper filings in a Regulation A offering, and removing and reserving Item 101(b)(8) [16] of Regulation S–T dealing with the optional electronic filing of Form F–X by Canadian issuers.

Table of Contents

I. Introduction
II. Final Rules and Amendments to Regulation A
A. Overview
B. Scope of Exemption
1. Eligible Issuers
2. Eligible Securities
3. Offering Limitations and Secondary Sales
4. Investment Limitation
5. Integration
6. Treatment Under Section 12(g)
C. Offering Statement
1. Electronic Filing; Delivery Requirements
2. Non-Public Submission of Draft Offering Statements
3. Form and Content
4. Continuous or Delayed Offerings and Offering Circular Supplements
5. Qualification
D. Solicitation of Interest (Testing the Waters)
1. Proposed Rules
2. Comments on Proposed Rules
3. Final Rules
E. Ongoing Reporting
1. Continuing Disclosure Obligations
2. Exchange Act Rule 15c2–11 and Other Implications of Ongoing Reporting Under Regulation A
3. Exchange Act Registration of Regulation A Securities
4. Exit Report on Form 1–Z
F. Insignificant Deviations From a Term, Condition or Requirement
G. Bad Actor Disqualification
1. Proposed Rules
2. Comments on Proposed Rules
3. Final Rules
H. Relationship With State Securities Law
1. Proposed Rules
2. Comments on Proposed Rules
3. Final Rules
I. Additional Considerations Related to Smaller Offerings
J. Transitional Guidance for Issuers Currently Conducting Regulation A Offerings
K. Technical and Conforming Amendments
III. Economic Analysis
A. Broad Economic Considerations
B. Baseline
1. Current Methods of Raising Up to $50 Million of Capital
2. Investors
3. Financial Intermediaries
C. Scope of Exemption
1. Eligible Issuers
2. Eligible Securities
3. Offering Limitations and Secondary Sales
4. Investment Limitation
5. Integration
6. Treatment Under Section 12(g)
D. Offering Statement
1. Electronic Filing and Delivery
2. Disclosure Format and Content
3. Audited Financial Statements
4. Other Accounting Requirements
5. Continuous and Delayed Offerings
6. Nonpublic Review of Draft Offering Statements
E. Solicitation of Interest (''Testing the Waters'')
F. Ongoing Reporting
1. Periodic and Current Event Reporting Requirements
2. Termination and Suspension of Reporting and Exit Reports
3. Exchange Act Registration
G. Insignificant Deviations
H. Bad Actor Disqualification
I. Relationship With State Securities Law
IV. Paperwork Reduction Act
A. Background
B. Estimated Number of Regulation A Offerings
C. PRA Reporting and Cost Burden Estimates

[1] 17 CFR 230.251 through 230.263.
[2] 15 U.S.C. 77a *et seq.*
[3] 17 CFR 239.90.
[4] 17 CFR 239.91.
[5] 17 CFR 260.4a–1.
[6] 15 U.S.C. 77aaa *et seq.*
[7] 17 CFR 240.12g5–1.
[8] 15 U.S.C. 78a *et seq.*
[9] 17 CFR 240.15c2–11.
[10] 17 CFR 200.30–1.
[11] 17 CFR 230.157(a).
[12] 17 CFR 230.505(b)(2)(iii).
[13] 17 CFR 232.101(a).
[14] 17 CFR 232.10 *et seq.*
[15] 17 CFR 232.101(c)(6).
[16] 17 CFR 232.101(b)(8).

1. Regulation A (Form 1–A and Form 2–A)
2. Form 1–K: Annual Report
3. Form 1–SA: Semiannual Report
4. Form 1–U: Current Reporting
5. Form 1–Z: Exit Report
6. Form 8–A: Short Form Registration Under the Exchange Act
7. Form ID Filings
8. Form F–X
D. Collections of Information Are Mandatory
V. Final Regulatory Flexibility Act Analysis
A. Need for the Rules
B. Significant Issues Raised by Public Comments
C. Small Entities Subject to the Rules
D. Reporting, Recordkeeping, and Other Compliance Requirements
E. Agency Action To Minimize Effect on Small Entities
VI. Statutory Basis and Text of Amendments

I. Introduction

On December 18, 2013, we proposed rule and form amendments [17] to implement Section 401 of the Jumpstart Our Business Startups Act (the ''JOBS Act'').[18] Section 401 of the JOBS Act amended Section 3(b) of the Securities Act by designating existing Section 3(b) as Section 3(b)(1), and creating new Sections 3(b)(2)–(5). Section 3(b)(2) directs the Commission to adopt rules adding a class of securities exempt from the registration requirements of the Securities Act for offerings of up to $50 million of securities within a 12-month period. Sections 3(b)(2)–(5) specify mandatory terms and conditions for such exempt offerings and also authorize the Commission to adopt other terms, conditions, or requirements as necessary in the public interest and for the protection of investors.[19] In addition, Section 3(b)(5) directs the Commission to review the $50 million offering limit specified in Section 3(b)(2) not later than two years after the enactment of the JOBS Act and every two years thereafter, and authorizes the Commission to increase the annual offering limit if it determines that it would be appropriate to do so. Accordingly, we are revising Regulation A under the Securities Act to require issuers conducting offerings in reliance on Section 3(b)(2) to comply with terms and conditions established by the Commission's rules, and, where applicable, to make ongoing disclosure.

II. Final Rules and Amendments to Regulation A

A. Overview

We are adopting final rules to implement the JOBS Act mandate by expanding Regulation A into two tiers: Tier 1, for securities offerings of up to $20 million; and Tier 2, for offerings of up to $50 million.[20] The final rules for offerings under Tier 1 and Tier 2 build on current Regulation A and preserve, with some modifications, existing provisions regarding issuer eligibility, offering circular contents, testing the waters, and ''bad actor'' disqualification. As proposed, and with the modifications described below, the final rules modernize the Regulation A filing process for all offerings, align practice in certain areas with prevailing practice for registered offerings, create additional flexibility for issuers in the offering process, and establish an ongoing reporting regime for Regulation A issuers. Under the final rules, Tier 2 issuers are required to include audited financial statements in their offering documents and to file annual, semiannual, and current reports with the Commission. With the exception of securities that will be listed on a national securities exchange upon qualification, purchasers in Tier 2 offerings must either be accredited investors, as that term is defined in Rule 501(a) of Regulation D, or be subject to certain limitations on their investment. The differences between Tier 1 and Tier 2 offerings are described more fully below.

In developing the final rules, we considered the statutory language of JOBS Act Section 401, the JOBS Act legislative history, recent recommendations of the Commission's Government-Business Forum on Small Business Capital Formation,[21] the Advisory Committee on Small and Emerging Companies,[22] the Equity Capital Formation Task Force,[23] comment letters received on Title IV of the JOBS Act before the Commission's proposed rules were issued in December of 2013,[24] and comment letters received to date on the Commission's proposed rules to implement Section 401 of the JOBS Act.[25]

The key provisions of the final rules and amendments to Regulation A follow: *Scope of the exemption—the final rules:*

- Establish two tiers of offerings:
- Tier 1: Annual offering limit of $20 million, including no more than $6 million on behalf of selling securityholders that are affiliates of the issuer.
- Tier 2: Annual offering limit of $50 million, including no more than $15 million on behalf of selling securityholders that are affiliates of the issuer.
- Limit sales by selling securityholders in an issuer's initial Regulation A offering and any subsequently qualified Regulation A offering within the first 12-month period following the date of qualification of the initial Regulation A offering to no more than 30% of the aggregate offering price.
- Preserve the existing issuer eligibility requirements of Regulation A, and also exclude issuers that are, or have been, subject to any order of the Commission pursuant to Section 12(j) of the Exchange Act entered within five years before the filing of the offering statement and issuers that are required to, but that have not, filed with the Commission the ongoing reports required by the final rules during the two years immediately preceding the filing of an offering statement.
- Limit the amount of securities that an investor who is not an accredited investor under Rule 501(a) of Regulation D can purchase in a Tier 2 offering to no more than: (a) 10% of the greater of annual income or net worth (for natural persons); or (b) 10% of the greater of annual revenue or net assets at fiscal year end (for non-natural persons). This limit will not apply to purchases of securities that will be listed on a national

[17] *See* Rel. No. 33–9497 [79 FR 3925] (Dec. 18, 2013) (the ''Proposing Release''), *available at: http://www.sec.gov/rules/proposed/2013/33-9497.pdf.*

[18] Public Law 112–106, 126 Stat. 306.

[19] We are adopting a number of terms and conditions for Regulation A offerings pursuant to our discretionary authority under Sections 3(b)(2)–(5). Where we have done so, as discussed in detail in Section II. below, it is because we find such terms and conditions to be necessary in the public interest and for the protection of investors.

[20] An issuer of $20 million or less of securities could elect to proceed under either Tier 1 or Tier 2.

[21] Recommendations of the Commission's Government-Business Forum on Small Business Capital Formation are *available at: http://www.sec.gov/info/smallbus/sbforum.shtml.*

[22] Recommendations of the Advisory Committee on Small and Emerging Companies are *available at: http://www.sec.gov/info/smallbus/acsec.shtml.*

[23] Equity Capital Task Force, *From the On-Ramp to the Freeway: Refueling Job Creation and Growth by Reconnecting Investors with Small-Cap Companies,* presentation to the U.S. Dep't. of Treasury (November 11, 2013), *available at: http://www.equitycapitalformationtaskforce.com/.*

[24] To facilitate public input on JOBS Act rulemaking before the issuance of rule proposals, the Commission invited members of the public to make their views known on various JOBS Act initiatives in advance of any rulemaking by submitting comment letters to the Commission's Web site at *http://www.sec.gov/spotlight/jobsactcomments.shtml.* Comment letters received to date on Title IV of the JOBS Act are *available at: http://www.sec.gov/comments/jobs-title-iv/jobs-title-iv.shtml.*

[25] The comment letters received to date in response to the Proposing Release are *available at: http://www.sec.gov/comments/s7-11-13/s71113.shtml.*

securities exchange upon qualification.

- Exclude asset-backed securities, as defined in Regulation AB, from the list of eligible securities.
- Update the safe harbor from integration and provide guidance on the potential integration of offerings conducted concurrently with, or close in time after, a Regulation A offering.

Solicitation materials:

- Permit issuers to ''test the waters'' with, or solicit interest in a potential offering from, the general public either before or after the filing of the offering statement, so long as any solicitation materials used after publicly filing the offering statement are preceded or accompanied by a preliminary offering circular or contain a notice informing potential investors where and how the most current preliminary offering circular can be obtained.

Qualification, communications, and offering process:

- Require issuers and intermediaries in the prequalification period to deliver a preliminary offering circular to prospective purchasers at least 48 hours in advance of sale unless the issuer is subject to, and current in, Tier 2 ongoing reporting obligations. Where the issuer is subject to, and current in, a Tier 2 ongoing reporting obligation, issuers and intermediaries will only be required to comply with the general delivery requirements for offers.
- Modernize the qualification, communications, and offering processes in Regulation A to reflect analogous provisions of the Securities Act registration process: [26]
  - Permit issuers and intermediaries to satisfy their delivery requirements as to the final offering circular under an ''access equals delivery'' model when sales are made on the basis of offers conducted during the prequalification period and the final offering circular is filed and available on the Commission's Electronic Data Gathering, Analysis and Retrieval system (EDGAR);
  - Require issuers and intermediaries, not later than two business days after completion of a sale, to provide purchasers with a copy of the final offering circular or a notice with the uniform resource locator (URL) where the final offering circular may be obtained on EDGAR and contact information sufficient to notify a purchaser where a request for a final offering circular can be sent and received in response; and
  - Permit issuers to file offering circular updates and supplements after qualification of the offering statement in lieu of post-qualification amendments in certain circumstances, including to provide the types of information that may be excluded from a prospectus under Rule 430A.
- Permit continuous or delayed offerings, but require issuers in continuous or delayed Tier 2 offerings to be current in their annual and semiannual reporting obligations in order to do so.
- Permit issuers to qualify additional securities in reliance on Regulation A by filing a post-qualification amendment to a qualified offering statement.

Offering statement:

- Require issuers to file offering statements with the Commission electronically on EDGAR.
- Permit the non-public submission of offering statements and amendments for review by Commission staff before filing such documents with the Commission, so long as all such documents are publicly filed not later than 21 calendar days before qualification.
- Eliminate the Model A (Question-and-Answer) disclosure format under Part II of Form 1–A.
- Update and clarify Model B (Narrative) disclosure format under Part II of Form 1–A (renamed, ''Offering Circular''), while continuing to permit Part I of Form S–1 narrative disclosure as an alternative.
- Permit real estate investment trusts (REITs) and similarly eligible companies to provide the narrative disclosure required by Part I of Form S–11 in Part II of Form 1–A.
- Require that offering statements be qualified by the Commission before sales may be made pursuant to Regulation A.
- Require Tier 1 and Tier 2 issuers to file balance sheets and related financial statements for the two previous fiscal year ends (or for such shorter time that they have been in existence).
- Require Tier 2 issuers to include financial statements in their offering circulars that are audited in accordance with either the auditing standards of the American Institute of Certified Public Accountants (AICPA) (referred to as U.S. Generally Accepted Auditing Standards or GAAS) or the standards of the Public Company Accounting Oversight Board (PCAOB).
- Require Tier 1 and Tier 2 issuers to include financial statements in Form 1–A that are dated not more than nine months before the date of non-public submission, filing, or qualification, with the most recent annual or interim balance sheet not older than nine months. If interim financial statements are required, they must cover a period of at least six months.

Ongoing reporting:

- Require Tier 1 issuers to provide information about sales in such offerings and to update certain issuer information by electronically filing a Form 1–Z exit report with the Commission not later than 30 calendar days after termination or completion of an offering.
- Require Tier 2 issuers to file electronically with the Commission on EDGAR annual and semiannual reports, as well as current event reports.
- Require Tier 2 issuers to file electronically a special financial report to cover financial periods between the most recent period included in a qualified offering statement and the issuer's first required periodic report.
- Permit the ongoing reports filed by an issuer conducting a Tier 2 offering to satisfy a broker-dealer's obligations under Exchange Act Rule 15c2–11.
- Provide that Tier 2 issuers' reporting obligations under Regulation A would suspend when they are subject to the ongoing reporting requirements of Section 13 of the Exchange Act, and may also be suspended under Regulation A at any time by filing a Form 1–Z exit report after completing reporting for the fiscal year in which an offering statement was qualified, so long as the securities of each class to which the offering statement relates are held of record by fewer than 300 persons, or fewer than 1,200 persons for banks or bank holding companies, and offers or sales made in reliance on a qualified Tier 2 Regulation A offering statement are not ongoing. In certain circumstances, Tier 2 Regulation A reporting obligations may terminate when issuers are no longer subject to the ongoing reporting requirements of Section 13 of the Exchange Act.
- Require Tier 2 issuers to include in their first annual report after termination or completion of a qualified Regulation A offering, or in their Form 1–Z exit report, information about sales in the terminated or completed offering and to update certain issuer information.
- Eliminate the requirement that issuers file a Form 2–A with the Commission

[26] *See, e.g.,* Securities Offering Reform, Rel. No. 33–8591 (July 19, 2005) [70 FR 44722].

to report sales and the termination of sales made under Regulation A every six months after qualification and within 30 calendar days after the termination, completion, or final sale of securities in the offering.

Exchange Act registration:

- Conditionally exempt securities issued in a Tier 2 offering from the mandatory registration requirements of Section 12(g) of the Exchange Act, for so long as the issuer engages the services of a transfer agent that is registered with the Commission under Section 17A of the Exchange Act, remains subject to a Tier 2 reporting obligation, is current in its annual and semiannual reporting at fiscal year end, and had a public float of less than $75 million as of the last business day of its most recently completed semiannual period, or, in the absence of a public float, had annual revenues of less than $50 million as of its most recently completed fiscal year.
- Permit Tier 2 issuers to use a Form 8–A short form registration statement concurrently with the qualification of a Regulation A offering statement that includes Part I of Form S–1 or Form S–11 narrative disclosure in Form 1–A in order to register a class of securities under Sections 12(g) or 12(b) of the Exchange Act.

''Bad actor'' disqualification provisions:

- Substantially conform the ''bad actor'' disqualification provisions of Rule 262 to Rule 506(d) and add a disclosure requirement similar to Rule 506(e).

Application of state securities laws:

- Provide for the preemption of state securities law registration and qualification requirements for securities offered or sold to ''qualified purchasers,'' in light of the total package of investor protections included in the final rules. A qualified purchaser will be defined to be any person to whom securities are offered or sold in a Tier 2 offering.

The Commission is required by Section 3(b)(5) of the Securities Act to review the Tier 2 offering limitation every two years. In addition to revisiting the Tier 2 offering limitation, the staff will also undertake to review the Tier 1 offering limitation at the same time. The staff also will undertake to study and submit a report to the Commission no later than 5 years following the adoption of the amendments to Regulation A, on the impact of both the Tier 1 and Tier 2 offerings on capital formation and investor protection. The report will include, but not be limited to, a review of: (1) The amount of capital raised under the amendments; (2) the number of issuances and amount raised by both Tier 1 and Tier 2 offerings; (3) the number of placement agents and brokers facilitating the Regulation A offerings; (4) the number of Federal, State, or any other actions taken against issuers, placement agents, or brokers with respect to both Tier 1 and Tier 2 offerings; and (5) whether any additional investor protections are necessary for either Tier 1 or Tier 2. Based on the information contained in the report, the Commission may propose to either decrease or increase the offering limit for Tier 1, as appropriate.

B. Scope of Exemption

1. Eligible Issuers

a. Proposed Rules

Section 401 of the JOBS Act does not include any express issuer eligibility requirements. The proposed rules would have maintained Regulation A's existing issuer eligibility requirements and added two new categories of ineligible issuers.[27] The two new categories would exclude issuers that are or have been subject to any order of the Commission pursuant to Section 12(j) of the Exchange Act entered within five years before the filing of the offering statement and issuers that are required to, but that have not, filed with the Commission the ongoing reports required by the final rules during the two years immediately preceding the filing of an offering statement. Additionally, we requested comment on other potential changes to the existing issuer eligibility requirements, including whether the exemption should be limited to ''operating companies,'' United States domestic issuers, or issuers that use a certain amount of the proceeds raised in a Regulation A offering in the United States. We also solicited comment on whether we should extend issuer eligibility to non-Canadian foreign issuers, business development companies as defined in Section 2(a)(48) of the Investment Company Act of 1940 (BDCs),[28] blank check companies,[29] or Exchange Act reporting companies, or, alternatively, eliminate shell companies or REITs from the exemptive regime.

b. Comments on the Proposed Rules

Commenters expressed a wide range of views on the proposed issuer eligibility requirements. A number of commenters expressed general support for the proposed issuer eligibility requirements.[30] Many commenters expressly supported the new proposed issuer eligibility criterion relating to the requirement to be current in Tier 2 ongoing reporting obligations.[31] One commenter also expressly supported the proposed exclusion of issuers subject to an order of the Commission entered pursuant to Section 12(j) of the Exchange Act from the list of eligible issuers.[32] Other commenters suggested additional limitations on issuer eligibility, including: a requirement that issuers be ''operating companies,''[33]

[27] Existing Regulation A limits issuer eligibility to issuers organized, and with a principal place of business, in the United States or Canada, while excluding Exchange Act reporting companies, investment companies, including business development companies, development stage companies that have no specific business plan or purpose or have indicated that their business plan is to engage in a merger or acquisition with an unidentified company or companies, issuers of fractional undivided interests in oil or gas rights or a similar interest in other mineral rights, and issuers disqualified because of Rule 262, 17 CFR 230.262 (2014). *See* 17 CFR 230.251(a) (2014).

[28] 15 U.S.C. 80a–2(a)(48).

[29] ''Blank check companies'' are development stage companies that have no specific business plan or purpose or have indicated that their business plan is to engage in a merger or acquisition with an unidentified company or companies. *See* Securities Act Rule 419(a)(2)(i), 17 CFR 230.419(a)(2)(i); *see also* SEC Rel. No. 33–6949 [57 FR 36442] (July 30, 1992), at fn. 50 (clarifying that blank check companies regardless of whether they are issuing penny stock are precluded from relying on Regulation A).

[30] Letter from Catherine T. Dixon, Chair, Federal Regulation of Securities Committee, Business Law Section, American Bar Association, April 3, 2014 (''ABA BLS Letter''); Letter from Gabrielle Buckley, Chair, Section of International Law, American Bar Association, May 14, 2014 (''ABA SIL Letter''); Letter from Andrew F. Viles, Canaccord Letter Genuity Inc., March 27, 2014 (''Canaccord Letter''); Letter from Pw Carey, March 24, 2014 (''Carey Letter''); Letter from Kurt N. Schacht, CFA, Managing Director, Standards and Financial Market Integrity, and Linda L. Rittenhouse, Director, Capital Markets, CFA Institute, March 24, 2014 (''CFA Institute Letter''); Letter from Kim Wales, Executive Board Member, Crowdfund Intermediary Regulatory Advocates (CFIRA), May 14, 2014 (''CFIRA Letter 1''); Letter from Christopher Tyrrell, Chair, Crowdfunding Intermediary Regulatory Advocates, February 23, 2015 (''CFIRA Letter 2''); Robert R. Kaplan, Jr. and T. Rhys James, Kaplan Voekler Cunningham & Frank PLC, March 23, 2014 (''KVCF Letter''); Letter from William F. Galvin, Secretary, Commonwealth of Massachusetts, March 24, 2014 (''Massachusetts Letter 2''); Letter from Morrison & Foerster LLP, March 26, 2014 (''MoFo Letter''); Letter from Andrea Seidt, President, North American Securities Administrators Association (NASAA) and Ohio Securities Commissioner, March 24, 2014 (''NASAA Letter 2''); Letter from William M. Beatty, Securities Administrator, Washington Department of Financial Institutions, March 24, 2014 (''WDFI Letter''); Letter from William R. Hambrecht, Chairman, WR Hambrecht+ Co, March 4, 2014 (''WR Hambrecht + Co Letter'').

[31] ABA BLS Letter; CFA Institute Letter; Massachusetts Letter 2; NASAA Letter 2; WDFI Letter.

[32] CFA Institute Letter.

[33] CFIRA Letter 1; WR Hambrecht + Co Letter (suggesting that limiting the availability of the

Continued

excluding shell companies and issuers of penny stock,[34] and excluding other types of investment vehicles, such as commodity pools and investment funds that invest in gold or virtual currencies.[35]

A few commenters recommended allowing blank check companies and special purpose acquisition companies (SPACs) to rely on Regulation A.[36] One of these commenters recommended allowing blank check companies seeking to raise at least $10 million to use Regulation A in the same manner as any other eligible issuer, but suggested that, if a company is raising less than $10 million in a Tier 2 offering, the Commission should implement certain additional requirements.[37] Another commenter recommended allowing issuers of fractional interests in oil and gas or other mineral rights to rely on Regulation A based on a ''reasonable'' eligibility test to be developed by the Commission.[38] Several commenters opposed any change to the proposed issuer eligibility requirements that would exclude REITs from participating in Regulation A offerings.[39] Other commenters advocated expanding the current categories of eligible issuers, and specifically supported the continued inclusion of Canadian companies and shell companies as eligible issuers, as proposed.[40]

(1) Non-Canadian Foreign Issuers

Many commenters recommended making non-Canadian foreign companies eligible issuers under Regulation A.[41] Several commenters suggested that the proposed approach to non-Canadian foreign companies is inconsistent with the treatment of foreign private issuers in registered offerings.[42] Additionally, commenters noted a variety of benefits arising from allowing foreign companies to access the U.S. capital markets through Regulation A offerings, including job creation,[43] increasing the amount of disclosure available for investors in foreign companies,[44] encouraging domestic exchange listings,[45] expanding investment opportunities for U.S. investors,[46] and general economic benefits.[47] One commenter recommended making all foreign private issuers eligible if they maintained a principal place of business in the United States.[48] Two commenters also recommended permitting companies relying on Exchange Act Rule 12g3–2(b) to make offerings under Regulation A.[49]

(2) BDCs

A number of commenters supported making BDCs eligible issuers under Regulation A.[50] Most of these commenters noted that BDCs serve an important function in facilitating small or emerging business capital formation or in providing a bridge from the private to public markets.[51] Several of these commenters recommended at least allowing small business investment company (SBIC) licensed BDCs to use the exemption given the review process such entities are required to undergo with the U.S. Small Business Administration.[52] One of these commenters noted that if BDCs become eligible to use Regulation A, the Commission should consider requiring them to provide quarterly financial disclosure so as to enhance transparency and provide the market with critical investment information.[53]

(3) Potential Limits on Issuer Size

Several commenters opposed using the issuer's size to limit eligibility.[54] Two of these commenters thought that the $50 million offering limit for Tier 2 would already limit the utility of the

exemption to, among other things, operating companies would provide investors with more confidence in the offerings conducted pursuant to Regulation A). *But see* KVCF Letter (suggesting that limiting availability of the exemption to operating companies would unnecessarily limit the utility of the exemption).

[34] ABA BLS Letter; MoFo Letter.

[35] Massachusetts Letter 2.

[36] Gilman Law Letter; Letter from Mark Goldberg, Chairman, Investment Program Association, March 24, 2014 (''IPA Letter''); Letter from David N. Feldman, Partner, Richardson Patel LLP, January 15, 2014 (''Richardson Patel Letter''). A SPAC is a type of blank check company created specifically to pool funds in order to finance a merger or acquisition opportunity within a set timeframe.

[37] Richardson Patel Letter (recommending that for offerings of less than $10 million under Tier 2, the rules should require that: (a) Monies raised be placed into escrow, minus underwriters compensation and 10% for offering expenses, until a reverse merger is completed; (b) a combination with an operating business be completed within three years; (c) full Form 10 information be disclosed regarding a pending reverse merger to investors who will have 15–20 days to reconfirm their investment or receive their money back; (d) there be no requirement that a certain percentage of investors reconfirm; and (e) accredited investors have no limit on the investment they make in the offering).

[38] Letter from Mark Kosanke, President, Real Estate Investment Securities Association, March 24, 2014 (''REISA Letter'') (suggesting that the Commission base the eligibility test on the issuer having an ''established track record'' or some minimum amount of assets).

[39] ABA BLS Letter; Letter from Gilman Law LLC, March 24, 2014 (''Gilman Law Letter''); MoFo Letter; Letter from Serenity Storage, January 5, 2014 (''Serenity Storage Letter'').

[40] Letter from Jonathan C. Guest, McCarter & English, LLP, February 19, 2014 (''McCarter & English Letter'') (also opposing any limitation on issuer eligibility on the basis of whether most of the offering proceeds were being used in connection with the issuer's operations in the United States, noting that many Canadian issuers would be excluded as a result); OTC Markets Letter.

[41] ABA SIL Letter; Letter from Scott Kupor, Managing Partner, Andreessen Horowitz, and Jeffrey M. Solomon, Chief Executive Officer, Cowen and Company, February 26, 2014 (''Andreessen/Cowen Letter''); Letter from BDO USA, LLP, March 20, 2104 (''BDO Letter''); Canaccord Letter (suggesting expanding issuer eligibility to companies organized in jurisdictions with ''robust securities regulation systems'' such as the United Kingdom and other countries in the European Union, Australia, and Asian markets such as Singapore and Hong Kong); McCarter & English Letter; OTC Markets Letter; Richardson Patel Letter; Letter from Michael T. Lempres, Assistant General Counsel, SVB Financial Group, March 21, 2014 (''SVB Financial Letter''); Letter from Bill Soby, Managing Director, Silicon Valley Global Shares, March 24, 2014 (''SVGS Letter'').

[42] Andreessen/Cowen Letter; BDO Letter; Richardson Patel Letter. In the context of registered offerings, foreign private issuers may provide scaled disclosure if it qualifies as a ''smaller reporting company,'' which is defined in Item 10(f)(1) of Regulation S–K, 17 CFR 229.10(f)(1), Securities Act Rule 405, 17 CFR 230.405, and Exchange Act Rule 12b–2, 17 CFR 240.12b–2, and rely on other disclosure accommodations.

[43] ABA SIL Letter; SVGS Letter (noting that high-paying jobs would be created by expanding global tech companies).

[44] SVB Financial Letter.

[45] Andreessen/Cowen Letter; SVB Financial Letter.

[46] Andreessen/Cowen Letter; OTC Markets Letter.

[47] ABA SIL Letter; Andreessen/Cowen Letter; McCarter & English Letter; SVB Financial Letter.

[48] ABA SIL Letter.

[49] McCarter & English Letter; OTC Markets Letter. Rule 12g3–2(b) generally provides foreign private issuers with an automatic exemption from registration under Section 12(g) if the issuer (i) is not required to file reports under Exchange Act Sections 13(a) or 15(d); (ii) maintains a listing of the subject class of securities on one or two exchanges in non-U.S. jurisdictions that comprise more than 55% of its worldwide trading volume; and (iii) publishes in English on its Web site certain material items of information. *See* 17 CFR 240.12g3–2(b).

[50] ABA BLS Letter; CFIRA Letter 1; Letter from Michael Sauvante, Executive Director, Commonwealth Fund LLC, March 21, 2014 (''Commonwealth Fund Letter 1''); Letter from Michael Sauvante, Executive Director, Commonwealth Fund LLC, March 22, 2014 (''Commonwealth Fund Letter 2''); KVCF Letter; Letter from Daniel Gorfine, Director, Financial Markets Policy, and Staci Warden, Executive Director, Center for Financial Markets, Milken Institute, March 19, 2014 (''Milken Institute Letter''); MoFo Letter; REISA Letter; SBIA Letter; WR Hambrecht + Co Letter.

[51] ABA BLS Letter; CFIRA Letter 1; Commonwealth Fund Letter 1; Commonwealth Fund Letter 2; KVCF Letter; Milken Institute Letter; MoFo Letter; REISA Letter; SBIA Letter; WR Hambrecht + Co Letter.

[52] Milken Institute Letter; SBIA Letter. A SBIC-licensed BDC is a company that is licensed by the Small Business Administration (SBA) to operate as such under the Small Business Investment Act of 1958.

[53] Milken Institute Letter.

[54] Letter from E. Cartier Esham, Executive Vice President, Emerging Companies, Biotechnology Industry Organization (BIO), March 11, 2014 (''BIO Letter''); IPA Letter; Letter from Tom Quaadman, Vice President, Center for Capital Markets Competitiveness, U.S. Chamber of Commerce, March 24, 2014 (''U.S. Chamber of Commerce Letter'').

exemption for issuers on the basis of issuer size—with smaller issuers likely benefitting most from the exemption—and recommended against size-based eligibility criteria that may be difficult to define.[55] One commenter suggested that most issuers with a large public float would likely be subject to Exchange Act reporting requirements and therefore would be ineligible to use Regulation A.[56] Another commenter noted that a size restriction based on public float would be particularly harmful to biotechnology companies, because they often have a public float that is disproportionately high in relation to their corporate structure, number of employees, or revenues.[57]

(4) Exchange Act Reporting Companies

A number of commenters supported allowing Exchange Act reporting companies to conduct offerings under Regulation A.[58] Several of these commenters recommended allowing Exchange Act reporting companies that are current in their reporting obligations to conduct Tier 2 offerings,[59] with one commenter limiting its recommendation to companies with a non-affiliate float of less than $250 million.[60] Three commenters further suggested that, if Exchange Act reporting companies are permitted to conduct offerings pursuant to Regulation A, Exchange Act reporting should satisfy any Regulation A reporting obligation.[61] One such commenter further suggested that Exchange Act reporting companies should be required to be current in their Exchange Act reporting obligations in order to be eligible to rely on the exemption, in a manner that is consistent with Regulation A as it existed before 1992.[62]

c. Final Rules

We are adopting the issuer eligibility criteria as proposed. Under the final rules, Regulation A will be limited to companies organized in and with their principal place of business in the United States or Canada. It will be unavailable to:

- Companies subject to the ongoing reporting requirements of Section 13 or 15(d) of the Exchange Act;
- companies registered or required to be registered under the Investment Company Act of 1940 and BDCs;
- blank check companies;
- issuers of fractional undivided interests in oil or gas rights, or similar interests in other mineral rights;
- issuers that are required to, but that have not, filed with the Commission the ongoing reports required by the rules under Regulation A during the two years immediately preceding the filing of a new offering statement (or for such shorter period that the issuer was required to file such reports);
- issuers that are or have been subject to an order by the Commission denying, suspending, or revoking the registration of a class of securities pursuant to Section 12(j) of the Exchange Act that was entered within five years before the filing of the offering statement;[63] and
- issuers subject to ''bad actor'' disqualification under Rule 262.[64]

We expect that the amendments we are adopting will significantly expand the utility of the Regulation A offering exemption.

Our approach in the final rules is generally to maintain the issuer eligibility requirements of existing Regulation A with the limited addition of two new categories of ineligible issuers. We believe this approach will provide important continuity in the Regulation A regime as it expands in the way Congress mandated. For this reason, we do not believe it is necessary to adopt final rules to exclude issuers that are currently eligible to conduct Regulation A offerings. Additionally, we recognize that expanding the categories of eligible issuers, as suggested by a number of commenters, could provide certain benefits, including increased investment opportunities for investors and avenues for capital formation for certain issuers. We are concerned, however, about the implications of extending issuer eligibility before the Commission has the ability to assess the impact of the changes to Regulation A being adopted today. In light of these changes, we believe it prudent to defer expanding the categories of eligible issuers (for example, by including non-Canadian foreign issuers, BDCs, or Exchange Act reporting companies) until the Commission has had the opportunity to observe the use of the amended Regulation A exemption and assess any new market practices as they develop.

Additionally, we are not adopting further restrictions on eligibility at this time. In light of the disclosure requirements contained in the final rules, we do not believe that it is necessary to exclude additional types of issuers, such as shell companies, issuers of penny stock, or other types of investment vehicles, from relying on the exemption in Regulation A. At the same time, we are concerned about potentially increased risks to investors that could result from extending issuer eligibility to other types of entities, such as blank check companies, before the Commission has the opportunity to observe developing market practices. We therefore believe the prudent approach with respect to any potential expansion of issuer eligibility is to give the Regulation A market time to develop under rules that we are adopting today. We also do not believe it is necessary to limit availability of the exemption to issuers of a certain size, as we agree with commenters that suggested that the annual offering limit will serve to limit the utility of the exemption for larger issuers in need of greater amounts of capital. We further do not believe that it is appropriate to limit the availability of the exemption to ''operating companies,'' as that term would restrict availability of the exemption to fewer issuers than are currently eligible under Regulation A, such as by excluding shell companies.

As proposed, the final rules include two new issuer eligibility requirements that add important investor protections to Regulation A. First, potential issuers must have filed all required ongoing reports under Regulation A during the two years immediately preceding the filing of a new offering statement (or for such shorter period that the issuer was required to file such reports) to remain eligible to conduct offerings pursuant to the rules. This requirement will benefit investors by providing them with more information, with respect to issuers that have previously made a Regulation A offering, to consider when making an investment decision, facilitate the development of an efficient secondary market in such securities, and enhance our ability to analyze and observe the Regulation A market. Second, issuers subject to orders by the Commission entered pursuant to Section 12(j) of the Exchange Act within a five-year period immediately preceding the filing of the offering statement will not be eligible to conduct an offering pursuant to Regulation A. This requirement will increase investor protection and

[55] BIO Letter; U.S. Chamber of Commerce Letter.

[56] IPA Letter.

[57] BIO Letter.

[58] Andreessen/Cowen Letter; BIO Letter; OTC Markets Letter; Letter from U.S. Senator Pat Roberts, May 27, 2014 (''Sen. Roberts Letter''); Letter from Jack H. Brier, President and Founder, US Alliance Corporation, March 19, 2014 (''US Alliance Corp. Letter'').

[59] Andreessen/Cowen Letter; BIO Letter; OTC Markets Letter.

[60] BIO Letter.

[61] Andreessen/Cowen Letter; CFIRA Letter 1; OTC Markets Letter.

[62] CFIRA Letter 1. Before amendments to Regulation A were adopted in 1992, Exchange Act reporting companies were permitted to conduct offerings in reliance on Regulation A, provided they were current in their public reporting. *See* 17 CFR 230.252(f) (1992).

[63] *See* Rule 251(b).

[64] *See* Rule 262.

compliment the exclusion of delinquent Regulation A filers discussed immediately above by excluding issuers with a demonstrated history of delinquent filings under the Exchange Act from the pool of eligible issuers under Regulation A.

2. Eligible Securities

a. Proposed Rules

Section 3(b)(3) of the Securities Act limits the availability of any exemption enacted under Section 3(b)(2) to ''equity securities, debt securities, and debt securities convertible or exchangeable into equity interests, including any guarantees of such securities.'' [65] The proposed rules would have limited the types of securities eligible for sale under both Tier 1 and Tier 2 of Regulation A to the specifically enumerated list of securities in Section 3(b)(3) and also would have excluded asset-backed securities, as defined in Regulation AB, from the list of eligible securities.

b. Comments on the Proposed Rules

Several commenters supported the exclusion of asset-backed securities from the list of eligible securities.[66] One commenter recommended clarifying that warrants exercisable for equity or debt securities are eligible securities.[67]

c. Final Rules

We are adopting final rules that limit the types of securities eligible for sale under Regulation A to the specifically enumerated list in Section 3(b)(3), which includes warrants and convertible equity securities, among other equity and debt securities.[68] The final rules exclude asset-backed securities from the list of eligible securities. Asset-backed securities are subject to the provisions of Regulation AB and other rules specifically tailored to the offering process, disclosure, and reporting requirements for such securities. These rules were not in effect when Regulation A was last updated in 1992.[69] We do not believe that Section 401 of the JOBS Act was enacted to facilitate the issuance of asset-backed securities.

3. Offering Limitations and Secondary Sales

a. Proposed Rules

We proposed to amend Regulation A to create two tiers of requirements: Tier 1, for offerings of up to $5 million of securities in a 12-month period; and Tier 2, for offerings of up to $50 million of securities in a 12-month period.[70] As proposed, issuers could conduct offerings of up to $5 million under either Tier 1 or Tier 2. Consistent with the existing provisions of Regulation A, we also proposed to permit sales by selling securityholders of up to 30% of the maximum offering amount permitted under the applicable tier ($1.5 million in any 12-month period for Tier 1 and $15 million in any 12-month period for Tier 2). Sales by selling securityholders under either tier would be aggregated with sales by the issuer for purposes of calculating the maximum permissible amount of securities that may be sold during any 12-month period. In addition, we proposed to eliminate the last sentence of Rule 251(b), which prohibits affiliate resales unless the issuer has had net income from continuing operations in at least one of its last two fiscal years.

b. Comments on the Proposed Rules

Commenters were generally supportive of the proposed offering limitations on primary and secondary offerings. Many commenters, however, suggested changes to the proposed offering limits for both tiers, as well as to the proposed limits on secondary sales.

(1) Offering Limitation

Several commenters recommended that the Commission increase the $50 million offering limitation for Tier 2.[71] As an alternative, one commenter recommended applying the $50 million limit on a per offering basis rather than on a 12-month basis, and suggested that the Commission consider eliminating the offering limits for certain types of issuers, such as those that have yet to generate revenue.[72] Additionally, two commenters recommended that the Commission do more to increase the utility of Tier 1 offerings by raising the Tier 1 offering limitation to $10 million or more in a 12-month period.[73] Another commenter suggested that the Commission create a third tier in between Tier 1 and Tier 2 that would have a $15 million offering limitation.[74]

With respect to offering limit calculations, one commenter recommended that the aggregate offering price of the underlying security only be included in the $50 million offering limitation during the 12-month period in which such security is first convertible, exercisable, or exchangeable.[75] This commenter suggested that its recommended approach would accommodate common small business offering structures that involve warrants exercisable at a premium over several years.

(2) Secondary Sales Offering Limitation

Several commenters specifically supported the proposed limitations on secondary sales.[76] While some commenters indicated their support for resale limitations,[77] they expressed a preference for either proscribing resales entirely [78] or requiring the approval of the resale offering by a majority of the issuer's independent directors upon a finding that the offering is in the best interests of both the selling securityholders and the issuer.[79] One commenter recommended prohibiting

[65] 15 U.S.C. 77c(b)(3).

[66] ABA BLS Letter; Carey Letter; Massachusetts Letter 2; NASAA Letter 2; WDFI Letter.

[67] ABA BLS Letter.

[68] *See* Rule 261(c); *see also* Rule 405 (defining ''equity security'' to include, among other things, warrants and certain convertible securities). We have also revised the proposed definition in Rule 261(c) to clarify that all securities, rather than just equity securities, that are convertible or exchangeable into equity interests are eligible, subject to the other terms of Regulation A.

[69] Regulation AB, 17 CFR 229.1100 *et seq.,* went into effect in 2005. *See* Rel. No. 33–8518 (Dec. 22, 2004). Asset-backed securities are defined in Rule 1101(c)(1) to generally mean a security that is primarily serviced by the cash flows of a discrete pool of receivables or other financial asset, either fixed or revolving, that by its terms converts into cash within a finite time period.

[70] As proposed, if the offering included securities that were convertible, exercisable, or exchangeable for other securities, the offer and sale of the underlying securities would also be required to be qualified and the aggregate offering price would include the aggregate conversion, exercise, or exchange price of such securities, regardless of when they become convertible, exercisable, or exchangeable.

[71] Letter from Salomon Kamalodine, Director, Investment Banking, B. Riley & Co., March 24, 2014 (''B. Riley Letter''); Letter from William Klehm, Chairman and CEO, Fallbrook Technologies, March 22, 2014 (''Fallbrook Technologies Letter'') (recommended raising the limit to $75 million); OTC Markets Letter (recommended raising the limit to $80 million); Jason Coombs, Co-Founder and CEO, Public Startup Company, Inc., March 24, 2014 (''Public Startup Co. Letter 1'') (recommended raising the limit to $75 million); Richardson Patel Letter (recommended raising the limit to $100 million).

[72] Richardson Patel Letter.

[73] Letter from Samuel S Guzik, Guzik and Associates, March 24, 2014 (''Guzik Letter 1'') (recommended raising the limit to ''at least $10 million''); Letter from Christopher Cole, Senior Vice President and Senior Regulatory Counsel, Independent Community Bankers of America, March 25, 2014 (''ICBA Letter'') (encouraged increasing the limit ''from $5 million to $10 million'').

[74] Public Startup Co. Letter 1.

[75] Andreessen/Cowen Letter; *cf.* Proposing Release, fn. 112.

[76] Massachusetts Letter 2; NASAA Letter 2; Richardson Patel Letter; WDFI Letter.

[77] Massachusetts Letter 2; NASAA Letter 2; WDFI Letter.

[78] Massachusetts Letter 2; NASAA Letter 2.

[79] NASAA Letter 2 (supporting the proposed limits coupled with a board approval requirement in lieu of prohibiting resales entirely); WDFI Letter (not expressing a preference for prohibiting resales entirely).

resales under Regulation A entirely.[80] Another commenter recommended requiring selling securityholders to hold the issuer's securities for 12 months before being eligible to sell pursuant to Regulation A, in order to distinguish between investors seeking to invest in a business and investors simply seeking to sell to the public for a gain.[81]

Many other commenters recommended raising the resale limits or eliminating them entirely.[82] One such commenter recommended alternatively removing non-affiliate securityholders from the resale limitation since concerns over investor information asymmetries would be reduced when dealing with non-affiliate securityholders.[83] This commenter also recommended that the Commission reevaluate the need for resale limits within a year of implementing the rules. Another commenter also recommended allowing for unlimited sales by non-affiliate selling securityholders and further suggested that the rules not aggregate such sales with issuer sales.[84] Two commenters suggested that limitations on resales are contrary to the Congressional intent behind the enactment of Title IV of the JOBS Act.[85]

(3) Rule 251(b)

Many commenters specifically supported the proposed elimination of the requirement that issuers must have had net income from continuing operations in at least one of its last two fiscal years in order for affiliate resales to be permitted, generally noting that many companies have net losses for many years, including, for example, due to high research and development costs.[86]

c. Final Rules

We are adopting the proposed amendments to Regulation A with modifications to the Tier 1 offering limitation and the secondary sales offering limitation. We discuss these amendments in detail below. We are also making a technical change to clarify the description of how compliance with the offering limitations is calculated in Rule 251(a).[87]

Tier 1

As discussed more fully in the ''Additional Considerations for Smaller Offerings'' section below, we are making changes to the proposed rules in response to comments and to increase the utility of Tier 1 of the Regulation A exemption.[88] Several commenters [89] and a report on the impact of state securities law requirements on offerings conducted under Regulation A by the U.S Government Accountability Office (GAO), as required by Section 402 of the JOBS Act,[90] highlighted the $5 million offering limitation in existing Regulation A as one of the main factors limiting the utility of the exemption. In certain circumstances, fixed costs associated with conducting Regulation A offerings, such as legal and accounting fees, may serve as a disincentive to use the exemption for lower offering amounts. We are therefore increasing the offering limitation in the final rules for Tier 1 offerings in a 12-month period from the proposed $5 million limitation to $20 million.[91] We believe that raising the offering limitation for Tier 1 offerings, in addition to other changes discussed in Section II.I. below, will increase the utility of the exemption for smaller issuers by providing them with additional options for capital formation and potentially increasing the proceeds received by the issuer. Consistent with the proportionate limitation on secondary sales in the proposed rules, we are also increasing the limitation on secondary sales in Tier 1 offerings in a 12-month period from the proposed $1.5 million limitation to $6 million.

Tier 2

We are adopting the proposed $50 million Tier 2 offering limitation.[92] Some commenters suggested that we raise the offering limitation to an amount above the statutory limitation set forth in Section 3(b)(2), but we do not believe an increase is warranted at this time. While Regulation A has existed as an exemption from registration for some time, today's changes are significant. We believe that the final rules for Regulation A will provide for a meaningful addition to the existing capital formation options of smaller companies while maintaining important investor protections. We are concerned, however, about expanding the offering limitation of the exemption beyond the level directly contemplated in Section 3(b)(2) at the outset of the adoption of final rules. As noted above in Section II.B.1., the final rules do not limit issuer eligibility on the basis of issuer size, as we believe that the $50 million annual offering limitation will serve to limit the utility of the exemption for larger issuers in need of greater amounts of capital. Similarly, we believe that the more extensive disclosure requirements associated with Exchange Act reporting are more appropriate for larger and generally more complex issuers that raise money in the public capital markets.[93] We are therefore concerned that an increase in the offering limitation at this time may increase risks to investors by encouraging larger issuers to conduct offerings pursuant to Regulation A in instances where disclosure pursuant to a registered offering under the Securities Act would be more appropriate.

The Commission is required by Section 401 of the JOBS Act to review the Section 3(b)(2) offering limitation every two years, and we will consider the use of the final rules by market participants as part of that review. We will therefore revisit the offering limitation by April 2016, as required by the statute, with a view to considering whether to increase the $50 million offering limitation. We also are adopting the proposed $15 million limitation on secondary sales for Tier 2 as proposed, with a change in the application of the limitation for secondary sales under both Tier 1 and Tier 2 discussed in the following section.

Application of the Limitation on Secondary Sales

As noted in the Proposing Release, secondary sales are an important part of Regulation A. We believe that allowing

[80] Carey Letter.

[81] Letter from Andrew M. Hartnett, Missouri Commissioner of Securities, March 24, 2014 (''MCS Letter'').

[82] ABA BLS Letter; B. Riley Letter; Canaccord Letter; CFIRA Letter 1; Milken Institute Letter; MoFo Letter; Richardson Patel Letter; WR Hambrecht + Co Letter.

[83] Milken Institute Letter.

[84] B. Riley Letter.

[85] CFIRA Letter 1; WR Hambrecht + Co Letter (noting that the JOBS Act contemplated an increase in the offering threshold to $50 million, but did not limit the percentage that could be sold by selling securityholders).

[86] ABA BLS Letter; B. Riley Letter; Canaccord Letter; CFIRA Letter 1; Milken Institute Letter; MoFo Letter; WR Hambrecht + Co Letter.

[87] The proposed rules used the phrase ''aggregate offering price for all securities sold'' when discussing the gross proceeds resulting from prior or anticipated sales of securities under Regulation A. We have clarified Rule 257(a)(1) to define as ''aggregate sales'' gross proceeds within the prior 12 month time frame contemplated by Regulation A. We have also made conforming changes elsewhere in the final rules and forms.

[88] *See* Section II.I. below.

[89] *See, e.g.,* Guzik Letter 1; ICBA Letter; Public Startup Co. Letter 1.

[90] *Factors that May Affect Trends in Regulation A Offerings,* GAO–12–839 (July 2012) (the ''GAO Report'') (*available at: http://www.gao.gov/assets/600/592113.pdf*). The GAO Report concludes that it is unclear whether increasing the Regulation A offering ceiling from $5 million to $50 million will improve the utility of the exemption.

[91] Rule 251(a)(1). We intend to revisit the Tier 1 offering limitation at the same time that we are required by Section 3(b)(5) of the Securities Act to review the Tier 2 offering limitation and will consider whether additional investor protections would be necessary if the Tier 1 offering limitation is increased.

[92] Rule 251(a)(2).

[93] *See* discussion in Section III.C.3. below.

selling securityholders access to avenues for liquidity will encourage them to invest in companies, although we acknowledge that providing for secondary sales in any amount may give rise to certain concerns. As highlighted by at least one commenter at the pre-proposing stage, permitting some secondary sales pursuant to Regulation A could place investors at an informational disadvantage to selling securityholders who have potentially greater access to inside information about the issuer and does not necessarily provide capital to the issuer.[94] Other commenters stated that such concerns are misplaced in the context of secondary sales by non-affiliates, who generally do not have access to inside information.[95]

We do not believe that a wholesale prohibition on secondary sales, as suggested by some commenters, is appropriate or necessary for either Tier 1 or Tier 2 of Regulation A. However, in order to strike an appropriate balance between allowing selling securityholders continued access to avenues for liquidity in Regulation A and the concern that secondary offerings do not directly provide new capital to companies and could pose the potential risks to investors discussed above, the final rules continue to permit secondary sales but provide additional limitations on secondary sales in the first year. The final rules limit the amount of securities that selling securityholders can sell at the time of an issuer's first Regulation A offering and within the following 12 months to no more than 30% of the aggregate offering price of a particular offering.[96] While the final rules continue to provide selling securityholders with the flexibility to sell securities during this period, we believe that this approach to the final rules will help to ensure that secondary sales at the time of such offerings will be made in conjunction with capital raising events by the issuer.

Further, we are providing different requirements for secondary sales by affiliates and by non-affiliates. The final rules limit secondary sales by affiliates that occur following the expiration of the first year after an issuer's initial qualification of an offering statement to no more than $6 million, in the case of Tier 1 offerings, or no more than $15 million, in the case of Tier 2 offerings, over a 12-month period. Secondary sales by non-affiliates that are made pursuant to a qualified offering statement following the expiration of the first year after an issuer's initial qualification of an offering statement will not be limited except by the maximum offering amount permitted by either Tier 1 or Tier 2.[97] Although the secondary sales offering amount limitation will only apply to affiliates during this period, consistent with the proposal, non-affiliate secondary sales will be aggregated with sales by the issuer and sales by affiliates for purposes of calculating compliance with the maximum offering amount permissible under the respective tiers.[98]

We do not believe that the concerns expressed by one commenter about informational disadvantages that may exist with affiliate sales are present with respect to resales by non-affiliates.[99] On the contrary, in comparison to requirements for non-affiliate resales of restricted securities after the expiration of Securities Act Rule 144 holding periods,[100] we believe that Regulation A provides purchasers of such securities with the benefit of, among other things, narrative and financial disclosure that is reviewed and qualified by the Commission in transactions that are subject to Section 12(a)(2) liability and the antifraud provisions of Section 17 of the Securities Act.[101]

We also disagree with the commenters who suggested limitations on secondary sales are contrary to the legislative intent behind the enactment of Title IV of the JOBS Act. We note that Section 3(b)(2) expressly provides that the Commission may impose additional terms, conditions, or requirements as it deems necessary in the public interest and for the protection of investors.[102] For the reasons discussed above, we believe that limiting secondary sales by affiliates is not only consistent with the language and purpose of the statute but also necessary in the public interest and for the protection of investors.

Offering Limit Calculation

Under the proposal, if the offering included securities that are convertible into, or exercisable or exchangeable for, other securities (rights to acquire), the offer and sale of the underlying securities also would generally be required to be qualified,[103] and the aggregate offering price would include the aggregate conversion, exercise, or exchange price of such securities, regardless of when they become convertible, exercisable, or exchangeable.[104] Consistent with the views of at least one commenter,[105] we are concerned that the proposed requirement could have a greater impact on smaller issuers than larger issuers because smaller issuers frequently issue rights to acquire other securities in capital raising events. The proposed method of calculating the offering limit would presume the exercise price of underlying securities that, by their terms, may occur at a date in the distant future or only upon the occurrence of key events. By including all securities underlying any rights to acquire other securities in the offering limit calculation, the proposed rules could effectively limit the proceeds of an offering available to an issuer by requiring such issuers to include in the aggregate offering price at the time of qualification the securities underlying rights to acquire that may or may not become exercisable or exchangeable in the future. We are adopting final rules that will require issuers to aggregate the price of all securities for which qualification is currently being sought, including the securities underlying any rights to acquire that are convertible, exercisable, or exchangeable within the first year after qualification or at the discretion of the issuer. As such, and consistent with the treatment of rights to acquire in the context of registered offerings, if an offering includes rights to acquire other securities at a time more than one year after qualification and the issuer does not otherwise seek to qualify such underlying securities, the aggregate offering price would not include the aggregate conversion, exercise, or exchange price of the underlying securities.[106] For purposes

[94] Letter from A. Heath Abshure, President, NASAA, April 10, 2013 (''NASAA (pre-proposal) Letter'').

[95] *See, e.g.,* Milken Institute Letter.

[96] Rule 251(a)(3) (Additional limitation on secondary sales in first year).

[97] Rule 251(a).

[98] Secondary sales of shares acquired in a Regulation A offering—which are freely tradable—are not subject to limitations on secondary sales, but must be resold under an exemption from Securities Act registration (*e.g.,* Section 4(a)(1), 15 U.S.C. 77d(a)(1)).

[99] NASAA (pre-proposal) Letter.

[100] Under Rule 144, non-affiliates of an issuer are, among other things, permitted to resell restricted securities after the expiration of a one-year holding period without limitations or requirements as to: (i) The availability of current public information about the issuer or its securities, (ii) the volume of resales, (iii) the manner of sale, or (iv) disclosure. *See* 17 CFR 230.144.

[101] 15 U.S.C. 77*l*(a)(2), 77q.

[102] *See* Section 3(b)(2)(G), 15 U.S.C. 77c(b)(2)(G).

[103] Qualification would not be required for securities transactions exempt from registration pursuant to Securities Act Section 3(a)(9), 15 U.S.C. 77c(a)(9). Section 3(a)(9) exempts from registration any security exchanged by the issuer with its existing security holders exclusively where no commission or other remuneration is paid or given directly or indirectly for soliciting such exchange.

[104] *See* note to proposed Rule 251(a).

[105] Andreessen/Cowen Letter.

[106] *See* note to Rule 251(a). In these circumstances, the securities underlying the rights to acquire would need to be separately qualified under Regulation A or, depending on the circumstances, registered, exempt from registration, or otherwise offered in an appropriate manner at the time of issuance.

of calculating the price of underlying securities that use a pricing formula, as opposed to a known conversion price, the issuer will be required to use the maximum estimated price for which such securities may be converted, exercised, or exchanged.[107]

Rule 251(b)

We are adopting as proposed final rules that eliminate the last sentence of Rule 251(b),[108] which prohibited affiliate resales unless the issuer had net income from continuing operations in at least one of its last two fiscal years. We agree with the views expressed by commenters that the absence of net income, by itself, is not a sufficient indicator of an enhanced risk that existing shareholders will use informational advantages to transfer their holdings to the investing public that would necessitate the continued application of the prohibition in the final rules. Further, as noted in the Proposing Release, the Commission's current disclosure review and qualification processes and enforcement programs are significantly more sophisticated and robust than they were when this provision was added to Regulation A in its original form.[109] In addition, the final rules being adopted today include revised ''bad actor'' disqualification provisions and additional issuer eligibility requirements aimed at limiting access to the exemption for market participants with demonstrated track records of non-compliance or abuse.[110]

4. Investment Limitation

a. Proposed Rules

Regulation A does not currently limit the amount of securities an investor can purchase in a qualified Regulation A offering. As we noted in the Proposing Release, however, we recognize that with the increased annual offering limitation provided in Section 3(b)(2) comes a risk of commensurately greater investor losses.[111] To address that risk we proposed, among other things, to limit the amount of securities investors can purchase in a Tier 2 offering to no more than 10% of the greater of their annual income or their net worth. For this purpose, annual income and net worth would be calculated as provided in the accredited investor definition under Rule 501 of Regulation D.[112] Under the proposal, issuers would be required to make investors aware of the investment limitations,[113] but would otherwise be able to rely on an investor's representation of compliance with the proposed investment limitation unless the issuer knew, at the time of sale, that any such representation was untrue.

b. Comments on Proposed Rules

A number of commenters generally supported investment limitations for Tier 2 offerings.[114] These commenters believed that an investment limitation would serve as an important investor protection. Several commenters recommended revisiting the necessity of the limitations after a one- to three- year trial period,[115] and another commenter[116] recommended extending the investment limitation to Tier 1 offerings to make them more consistent with our proposed rules for securities-based crowdfunding transactions conducted pursuant to Section 4(a)(6) of the Securities Act.[117] Some commenters' support for the proposed investment limitations was conditioned on suggested changes to the proposed rules that would require issuers to do more to ensure compliance with the limitations and that would impose adverse consequences on issuers for the failure to do so.[118] One commenter believed that the 10% limitation is ''significantly higher'' than is appropriate for ''all but the wealthiest, least risk averse'' investors.[119] Two commenters suggested that the 10% limitation should be aggregated across all Regulation A offerings instead of being applied on a per offering basis,[120] while one commenter specifically argued against such an aggregated limit.[121]

Numerous commenters recommended eliminating the investment limitation for Tier 2 offerings.[122] Several of these commenters alternatively recommended at least doubling the limit if the provision is not eliminated entirely.[123] Other commenters thought that the investment limitation is unnecessary in light of the other investor protections for Tier 2 offerings, such as the expanded disclosure requirements.[124] Several commenters noted that the limit does not have a statutory basis and suggested that it may be contrary to Congressional intent,[125] or contrary to the principles underlying federal securities law, which focus on fraud prevention and full disclosure.[126] One commenter recommended eliminating the investment limitations only if the final rules do not preempt state law registration requirements for Tier 2 offerings, arguing that the limitations may conflict with state investor suitability standards,[127] while another commenter indicated that investment limitations would be unnecessary with appropriate state oversight, but supported limits for retail investors in startup companies and high-risk offerings.[128] Another commenter recommended creating various categories of investor sophistication with corresponding requirements and limitations for each.[129]

Many commenters, including those both for and against the investment limit, recommended providing exceptions to the limit for certain types of investors, such as accredited investors, or altering the application of

[107] *Id.*

[108] 17 CFR 230.251(b) (2014).

[109] *See* Proposing Release, at Section II.B.3.

[110] *See* discussions in Section II.G (Bad Actor Disqualification) below and Section II.B.1 (Eligible Issuers) above.

[111] *See* Proposing Release, at Section II.B.4.

[112] 17 CFR 230.501.

[113] *See* paragraph (a)(5) to Part II of proposed Form 1–A.

[114] CFA Institute Letter; IPA Letter; Letter from Robert Kisel, Small Business Owner, March 18, 2014 (''Kisel Letter'') (erroneously referring to the 10% limit as a 5% limit); MCS Letter; REISA Letter; Richardson Patel Letter; WDFI Letter.

[115] CFIRA Letter 1; Kisel Letter; Milken Institute Letter.

[116] CFA Institute Letter.

[117] *See* Crowdfunding, Rel. No. 33–9470 [78 FR 66427] (Nov. 5, 2013).

[118] CFA Institute Letter; MCS Letter; WDFI Letter.

[119] Letter from Barbara Roper, Director of Investor Protection, Consumer Federation of America, March 24, 2014 (''CFA Letter'').

[120] CFA Letter (not recommending this specifically, but noting this as one reason why the investment limit was not an adequate substitute for state review of Tier 2 offerings); William A. Jacobson, Clinical Professor of Law, Cornell Law School, and Director, Cornell Securities Law Clinic, March 24, 2014 (''Cornell Clinic Letter'').

[121] KVCF Letter.

[122] ABA BLS Letter; Andreessen/Cowen Letter; B. Riley Letter; CFIRA Letter 1; CFIRA Letter 2; Fallbrook Technologies Letter; Letter from Groundfloor Finance, Inc., Nov. 18, 2014 (''Groundfloor Letter''); Heritage Letter; ICBA Letter; IPA Letter; Letter from Ford C. Ladd, Esq., May 19, 2014 (''Ladd Letter 2''); Letter from John Rodenrys, Executive Director R&D, Leading Biosciences, Inc., March 24, 2014 (''Leading Biosciences Letter''); Milken Institute Letter; MoFo Letter; NASAA Letter 2; Letter from Michael L. Zuppone, Paul Hastings LLP, March 24, 2014 (''Paul Hastings Letter''); Letter from Jason Coombs, Co-Founder and CEO, Public Startup Company, Inc., April 2, 2014 (''Public Startup Co. Letter 7''); SVB Financial Letter.

[123] Fallbrook Technologies Letter; Leading Biosciences Letter; ICBA Letter.

[124] ABA BLS Letter; Andreessen/Cowen Letter; B. Riley Letter; MoFo Letter; Paul Hastings Letter; SVB Financial Letter.

[125] ABA BLS Letter; Andreessen/Cowen Letter; CFIRA Letter 1; Heritage Letter; MoFo Letter; WR Hambrecht + Co Letter.

[126] ABA BLS Letter; B. Riley Letter; Heritage Letter; Milken Institute Letter.

[127] Groundfloor Letter.

[128] NASAA Letter 2.

[129] Cornell Clinic Letter (recommending the tiered investment limits in our proposed rules for securities-based crowdfunding as an example).

the limit to such types of investors.[130] These commenters believed that the investor protections afforded by the investment limit would not be necessary for all types of investors or in all types of Regulation A offerings. Some commenters recommended eliminating the investment limit for accredited investors.[131] One such commenter recommended eliminating the investment limit generally and, if not, at least for institutional investors and offerings of securities listed on securities exchanges.[132] Several commenters recommended eliminating the investment limit for non-natural persons or institutional investors.[133] Other commenters recommended eliminating the investment limits for other types of investors or offerings.[134] Two commenters noted that it would be difficult to apply the investment limits to non-natural persons (such as small businesses and IRAs) if the rules use an income or net worth test.[135] One of these commenters recommended that, if the test applies to such investors, it should be based on assets or revenue.[136]

Many commenters explicitly supported allowing issuers to rely on an investor's representation of compliance with the 10% investment limit.[137] Most of these commenters stated that any more rigorous verification process would cause the compliance costs to be too high. One commenter recommended eliminating any obligation for the issuer to monitor the 10% investment limit and allowing the issuer to rely on a representation by the investor that he or she will notify the issuer upon exceeding the 10% limit.[138] Another commenter recommended permitting an issuer to rely on representations from its underwriters or broker-dealers as to the 10% investment limit, rather than having to seek this directly from investors.[139] This commenter believed that the issuers in most Tier 2 offerings would have little direct contact with the investors and that the intermediaries would be better positioned to assess compliance (possibly already having information about the investor's finances).

Several commenters disagreed with allowing investors to represent compliance with the investment limitation and recommended a standard that would require an issuer to do more to ensure compliance.[140] Two commenters recommended adopting a standard requiring issuers to take reasonable steps to verify that the purchasers are in compliance with the 10% investment limit.[141] Two commenters recommended requiring an issuer to have a ''reasonable belief'' or ''reasonable basis'' that it can rely on an investor's representation of compliance with the 10% investment limit.[142] One such commenter also suggested allowing accredited investors to exceed the 10% investment limit, but requiring that the issuer take reasonable steps to verify accredited investor status.[143] One commenter recommended requiring a ''duty of inquiry'' so that the issuer would have to follow-up on any ''red flags.''[144] Additionally, this commenter recommended that the Commission create an independent and secure means of verifying investor income or to require a mandatory questionnaire for individual investors to complete before buying a security issued under Regulation A.

c. Final Rules

We are adopting an investment limitation for Tier 2 offerings in the final rules, with minor modifications from the proposed rules. We believe that the investment limitation serves as an important investor protection and may help to mitigate the risk that with the increased annual offering limitation provided in Section 3(b)(2) comes a risk of commensurately greater investor losses. We do not believe that the limitation is needed for accredited investors because investors that qualify as accredited under our rules satisfy certain criteria that suggest they are capable of protecting themselves in transactions that are exempt from registration under the Securities Act.[145] We also do not believe that the limitation is necessary for investments in securities that will be listed on a national securities exchange upon qualification because of the issuer listing requirements and the potential liquidity that exchanges provide to investors that seek to reduce their holdings. These both are important investor protections that help to mitigate concerns about the magnitude of loss that could potentially result from an investor purchasing a large amount of securities in a single offering.

Under the final rules, the investment limitations for purchasers in Tier 2 offerings will not apply to purchasers who qualify as accredited investors under Rule 501 of Regulation D.[146] Further, investment limitations in a Tier 2 offering will not apply to the sale of securities that will be listed on a national securities exchange upon qualification since such issuers will be required to meet the listing standards of

[130] ABA BLS Letter; Andreessen/Cowen Letter; Canaccord Letter; Cornell Clinic Letter; Fallbrook Technologies Letter; Heritage Letter; Ladd Letter 2; Leading Biosciences Letter; McCarter & English Letter; MCS Letter; Milken Institute Letter; MoFo Letter; Paul Hastings Letter; Richardson Patel Letter; SVB Financial Letter; WR Hambrecht + Co Letter.

[131] ABA BLS Letter; Andreessen/Cowen Letter; Canaccord Letter; Fallbrook Technologies Letter; Heritage Letter; Ladd Letter 2; Leading Biosciences Letter; McCarter & English Letter; MCS Letter; MoFo Letter; Paul Hastings Letter; Richardson Patel Letter; SVB Financial Letter; *cf.* Cornell Clinic Letter (recommending an unspecified higher limit for accredited investors); Milken Institute Letter; WR Hambrecht + Co Letter (supporting eliminating the investment limit generally).

[132] Milken Institute Letter.

[133] ABA BLS Letter; Canaccord Letter; Milken Institute Letter; MoFo Letter; WR Hambrecht + Co Letter. Several of these commenters believed that, as proposed, the investment limitations would not apply to non-natural persons and asked the Commission to confirm or clarify this point.

[134] Cornell Clinic Letter (creating a separate, higher limit for institutional investors and other types of non-retail investors included in the ''accredited investor'' definition); Heritage Letter (eliminating the investment limit for ''any current or former investor, employee or officer of the issuer''); Ladd Letter 2 (eliminating the investment limit for any non-accredited affiliates, founders, employees, agents, independent contractors and owners); Milken Institute Letter (eliminating the investment limit for investors that purchase Tier 2 securities on an exchange); Paul Hastings Letter (eliminating the investment limit for offerings conducted by registered broker-dealers); Richardson Patel Letter (eliminating the investment limit for any non-individual investor with at least $100,000 in assets or $100,000 in revenue in the previous fiscal year).

[135] McCarter & English Letter; Richardson Patel Letter.

[136] Richardson Patel Letter.

[137] Fallbrook Technologies Letter; Heritage Letter; IPA Letter; KVCF Letter; Leading Biosciences Letter; REISA Letter.

[138] REISA Letter.

[139] KVCF Letter.

[140] Letter from Paul Sigelman, President & CEO, Accredited Assurance, March 24, 2014 (''Accredited Assurance Letter''); CFA Letter; CFA Institute Letter; Cornell Clinic Letter; MCS Letter; WDFI Letter.

[141] Accredited Assurance Letter; WDFI Letter.

[142] CFA Institute Letter; MCS Letter.

[143] MCS Letter.

[144] Cornell Clinic Letter.

[145] *See* Rule 501(a) of Regulation D, 17 CFR 230.501(a); *see also SEC* v. *Ralston Purina Co.,* 346 U.S. 119 (1953).

[146] *See* Rule 252(c)(2). Under Rule 501, natural persons are accredited investors if: (i) Their income exceeds $200,000 in each of the two most recent years (or $300,000 in joint income with a person's spouse), and they reasonably expect to reach the same income level in the current year; (ii) they serve as executives or directors of the issuer; or (iii) their net worth exceeds $1,000,000 (individual or jointly with a spouse), excluding the value of their primary residence. Certain enumerated entities that satisfy an asset-based test also qualify as accredited investors, while others, including regulated entities such as banks and registered investment companies, are not subject to the asset test. *See* 17 CFR 230.501. The accredited investor definition is intended to encompass those individuals and entities ''whose financial sophistication and ability to sustain the risk of loss of investment or ability to fend for themselves render the protections of the Securities Act's registration process unnecessary.'' *See, e.g.,* Rel. No. 33–6683 (Jan. 16, 1987) [52 FR 3015] (Regulation D Revisions; Exemption for Certain Employee Benefit Plans).

a national securities exchange [147] and become subject to ongoing Exchange Act reporting, resulting in additional investor protections.

In response to questions raised by commenters, we are clarifying that non-accredited, non-natural persons are subject to the investment limitation and should calculate the limitation based on no more than 10% of the greater of the purchaser's revenue or net assets (as of the purchaser's most recent fiscal year end).[148] Non-accredited, natural persons must calculate the investment limitations on the basis of 10% of the greater of the purchaser's annual income or net worth (determined as provided in Rule 501 of Regulation D).[149]

If the investor is purchasing securities that are convertible into, or exercisable or exchangeable for, other securities, if such securities are exercisable within a year or otherwise are being qualified, the investment limitation will include the aggregate conversion, exercise, or exchange price of such securities, in addition to the purchase price.[150] We believe this is an appropriate calculation because it is consistent with the offering limit calculation for the respective tiers [151] and because it applies investment limitations to reasonably foreseeable investment decisions (*i.e.,* those involving securities exercisable within a year or otherwise qualified by the issuer) while reducing the risk that issuers may seek to sell large amounts of securities that are convertible, exercisable or exchangeable into other securities in the near term at a low cost in an effort to avoid the 10% limitation.

As proposed, we are adopting final rules that require issuers to notify investors of the investment limitations.[152] Issuers may rely on a representation of compliance with the investment limitation from the investor, unless the issuer knew at the time of sale that any such representation was untrue.[153] As we noted in the Proposing Release, we are cognizant of the privacy issues and practical difficulties associated with verifying individual income and net worth and, therefore, are not requiring investors to disclose personal information to issuers in order to verify compliance.[154]

Some commenters suggested requiring an issuer to have a reasonable belief that it can rely on an investor's representation of compliance with the investment limitations or to take reasonable steps to verify compliance, while other commenters suggested we establish consequences for issuers (and intermediaries, when applicable) if an investor failed to comply with the limitations.[155] At the same time, many commenters supported the proposed approach, noting the low compliance costs and the certainty it would provide issuers and their intermediaries.[156] We believe that the rules, as adopted, will limit potential losses for non-accredited investors with respect to individual offerings, while providing certainty to, and lower compliance costs for, issuers and intermediaries.

We do not believe that additional requirements for issuers and their intermediaries, such as requiring issuers to take reasonable steps to verify an investors' compliance with the investment limitations, are necessary to protect investors in light of the total package of investor protections included in the final rules for Tier 2 offerings.[157] We believe that additional requirements, like the ones suggested by some commenters, may have an unintended consequence of dissuading issuers from selling to non-accredited investors in Tier 2 offerings by increasing compliance uncertainties and obligations. We are therefore not adopting any additional compliance requirements with respect to investment limitations in the final rules.

While many commenters urged the Commission to eliminate or provide less restrictive investment limitations in the final rules,[158] we believe that these requirements, as proposed and adopted, usefully augment other requirements for, and investor protections applicable to, Tier 2 offerings. As we noted in the Proposing Release, Title IV of the JOBS Act mandates certain investor protections [159] and suggests that the Commission consider others as part of its Section 3(b)(2) rulemaking.[160] Congress recognized in Section 3(b)(2) that investor protections beyond those expressly provided in Title IV of the JOBS Act may be necessary in the revised regulation. To that end, Section 3(b)(2)(G) indicates that the Commission may include in the expanded exemption ''such other terms, conditions, or requirements. . . necessary in the public interest and for the protection of investors. . . .'' Limiting the amount of securities that a non-accredited investor can purchase in a particular Tier 2 offering (other than a Tier 2 offering of securities listed on a national securities exchange) should help to mitigate concerns that such investors may not be able to absorb the potential loss of the investment and is consistent with the authority granted to the Commission in Section 3(b)(2).[161] We further believe that setting the investment limitation at 10% of the greater of such investor's net worth/net assets and annual income/revenue, as opposed to some other percentage (*e.g.,* 5% or 20%), is generally consistent with similar maximum investment limitations placed on investors in Title III of the JOBS Act and will help to set a loss limitation standard in such offerings.[162]

Despite the suggestions of some commenters,[163] we do not believe that further distinctions as to the applicability of investment limitations are appropriate among investors that do not qualify as accredited investors. On the contrary, we believe that the regulatory distinctions among accredited and non-accredited investors and the familiarity many market participants have with such terms will help to ease compliance with, and

[147] National securities exchanges impose certain requirements on issuers, in addition to those generally required by the Commission, in order for an issuer's securities to be approved for listing. *See* discussion of listing requirements for, and additional investor protections associated with, national securities exchanges in Section II.E.3.c. below; *see also* fns. 721, 722 below.

[148] Rule 251(d)(2)(i)(C)(*1*).

[149] Rule 251(d)(2)(i)(C)(*2*). *See* Securities Act Rule 501(a)(5) [17 CFR 230.501(a)(5)] (net worth). Consistent with this rule, the calculation of a natural person's net worth for purposes of the investment limit excludes the value of the primary residence of such person.

[150] *See* note to Rule 251(d)(2)(i).

[151] *See* discussion in Section II.B.3.c. above.

[152] *See* paragraph (a)(5) to Part II of Form 1–A.

[153] Rule 251(d)(2)(i)(D). Similarly, issuers may also rely on representations of investor compliance with the investment limitations from participating broker-dealers, unless the issuer knew at the time of sale that any such representation was untrue.

[154] *See* Proposing Release, at Section II.B.4.

[155] *See* fn. 140–144 above.

[156] *See* fn. 137 above.

[157] For example, the final rules include limitations on issuer eligibility, bad actor disqualification provisions, a requirement that offering statements must be qualified by the Commission, narrative and financial disclosure requirements, which for Tier 2 offerings must include audited financial statements on an initial and annual basis, as well as annual, semiannual, and current event reporting.

[158] *See* fn. 122 above.

[159] *See* Section 3(b)(2)(D) (expressly providing for Section 12(a)(2) liability for any person offering or selling Section 3(b)(2) securities); Section 3(b)(2)(F) (requiring issuers to file audited financial statements with the Commission annually).

[160] *See* Section 3(b)(2)(G) (inviting the Commission to consider, among other things, requiring audited financial statements in the offering statement and implementing bad actor disqualification provisions); Section 3(b)(4) (inviting the Commission to consider implementing ongoing reporting requirements).

[161] As proposed and adopted, an underwriter in a firm commitment underwritten Regulation A offering, or participating broker-dealer that is involved in stabilization activities with respect to an offering of Regulation A securities will not be considered an investor that is subject to the investment limitations.

[162] Section 301 of the JOBS Act; *see also* Securities Act Section 4(a)(6), 15 U.S.C. 77d(a)(6).

[163] *See* fn. 134 above.

determinations about the applicability of, the investment limitations and will avoid unnecessary complexity associated with other, additional distinctions.

5. Integration

a. Proposed Rules

We proposed amending Rule 251(c) of Regulation A, which governs the integration of Regulation A offerings with other offerings, to provide that offerings under Regulation A would not to be integrated with any of the following:[164]

- Prior offers or sales of securities; or
- certain specified subsequent offers and sales of securities.[165]

The proposed safe harbor was substantially the same as the existing integration safe harbor in Rule 251(c), with the addition of a separate provision for securities-based crowdfunding transactions conducted pursuant to Section 4(a)(6) of the Securities Act.[166]

We further proposed to amend Rule 254(d) to provide that, where an issuer decides to register an offering after soliciting interest in a contemplated, but abandoned, Regulation A offering, any offers made pursuant to Regulation A would not be subject to integration with the registered offering, unless the issuer engaged in solicitations of interest in reliance on Regulation A to persons other than qualified institutional buyers (QIBs)[167] and institutional accredited investors permitted by Section 5(d)[168] of the Securities Act.[169] As proposed, an issuer (and any underwriter, broker, dealer, or agent that is acting on behalf of the issuer in connection with the proposed offering) soliciting interest in a Regulation A offering to persons other than QIBs and institutional accredited investors would need to wait at least 30 calendar days between the last such solicitation of interest in the Regulation A offering and the filing of the registration statement with the Commission.[170] The Proposing Release also provided guidance on the applicability of the integration doctrine for offerings conducted outside the scope of the safe harbor.[171]

b. Comments on the Proposed Rules

One commenter specifically supported the proposed changes to the integration provisions of Regulation A.[172] Another commenter objected to the proposed changes to the integration provisions and related guidance.[173] This commenter cautioned that it would be very difficult to police compliance with these provisions and suggested that they would be used to evade regulatory requirements.

c. Final Rules

We are adopting, as proposed, an integration safe harbor, with one clarifying change. Under the final rules, offerings pursuant to Regulation A will not be integrated with:

- Prior offers or sales of securities; or
- subsequent offers and sales of securities that are:
- Registered under the Securities Act, except as provided in Rule 255(c);
- made pursuant to Rule 701 under the Securities Act;
- made pursuant to an employee benefit plan;
- made pursuant to Regulation S;
- made pursuant to Section 4(a)(6) of the Securities Act; or
- made more than six months after completion of the Regulation A offering.[174]

We believe that the integration safe harbor has historically provided and, as amended, will continue to provide, issuers, particularly smaller issuers whose capital needs often change, with valuable certainty as to the contours of a given offering and their eligibility for an exemption from Securities Act registration. The addition of subsequent offers or sales made pursuant to Section 4(a)(6), which is the only substantive change to the existing safe harbor being adopted today, should not significantly alter the application of the doctrine in practice. Given the unique capital formation method available to issuers and investors through Section 4(a)(6) of the Securities Act and the small dollar amounts involved, we believe that the addition to the safe harbor list of subsequent crowdfunding offers and sales conducted pursuant to such section is appropriate and will not unduly increase risks to investors.[175] As with any exemption from registration, the burden of proof of compliance with a claimed exemption rests with the party claiming it.[176] In our view, the benefits of providing issuers with certainty as to the scope of the integration doctrine, particularly for Regulation A, outweighs the concern expressed by one commenter that compliance with the doctrine may be difficult to enforce.[177] In light of the broad permissible target audience of Regulation A solicitations, the potential for expanded use of solicitation materials in Regulation A discussed more fully in Section II.D. below, and the addition of similar provisions for registered offerings under Section 5(d), we believe the integration provisions in the final rule are necessary to ensure that amended Regulation A functions as a viable capital raising option for issuers.

We are also clarifying in the final rules the scope of the proposed safe harbor from integration in instances where an issuer abandons a contemplated Regulation A offering before qualification, but after soliciting interest in such offering to persons other than QIBs and institutional accredited investors. The proposed language could be read to imply that issuers must wait at least 30 calendar days to avoid integration with a subsequent registered offering or else be subject to integration. The final rules clarify that waiting less than 30 calendar days before a subsequent registered offering would not necessarily result in integration and would instead depend on the particular facts and circumstances.[178]

We are also reaffirming the integration guidance provided in the Proposing Release, which is consistent with guidance provided by the Commission in a 2007 rule proposal on Regulation D.[179] As noted in the Proposing Release,

[164] The integration doctrine seeks to prevent an issuer from improperly avoiding registration by artificially dividing a single offering into multiple offerings such that Securities Act exemptions would apply to multiple offerings that would not be available for the combined offering.

[165] *See* proposed Rule 251(c), which included in the safe harbor subsequent offers or sales that are registered under the Securities Act, or made pursuant to Securities Act Rule 701, an employee benefit plan, Regulation S, proposed Regulation Crowdfunding (*see* Rel. No. 33–9470), or more than six months after completion of the Regulation A offering.

[166] Section 4(a)(6) was added to the Securities Act by Section 302 of the JOBS Act.

[167] QIBs are large institutions meeting specific requirements outlined in Rule 144A, or entities the seller (or a person acting on its behalf) reasonably believes to be QIBs. *See* Rule 144A, 17 CFR 230.144A.

[168] 15 U.S.C. 77e(d); *see also* fn. 537 below.

[169] Proposed Rule 255(e).

[170] *Id.*

[171] *See* Proposing Release, Section II.B.5.

[172] ABA BLS Letter.

[173] CFA Letter.

[174] Rule 251(c).

[175] *See* 15 U.S.C.77d(a)(6); *see also* Rel. No. 33–9470.

[176] *See Ralston Purina Co.,* 346 U.S. 119.

[177] CFA Letter.

[178] *See* Note to Rule 251(c) and Rule 255(e); *see also* Section II.D. below for a discussion on solicitation materials.

[179] *See* Revision of Limited Offering Exemptions in Regulation D, Release No. 33–8828 (Aug. 3, 2007) (expressing the view that the determination as to whether the filing of the registration statement should be considered to be a general solicitation or general advertising that would affect the availability of an exemption under Securities Act Section 4(a)(2) for such a concurrent unregistered offering should be based on a consideration of whether the investors in the private placement were solicited by the registration statement or through some other means that would otherwise not foreclose the availability of the Section 4(a)(2) exemption).

we believe that an offering made in reliance on Regulation A should not be integrated with another exempt offering made by the issuer, provided that each offering complies with the requirements of the exemption that is being relied upon for the particular offering. For example, an issuer conducting a concurrent exempt offering for which general solicitation is not permitted will need to be satisfied that purchasers in that offering were not solicited by means of the offering made in reliance on Regulation A, including without limitation any ''testing the waters'' communications.[180] Alternatively, an issuer conducting a concurrent exempt offering for which general solicitation is permitted, for example, under Rule 506(c), could not include in any such general solicitation an advertisement of the terms of a Regulation A offering, unless that advertisement also included the necessary legends for, and otherwise complied with, Regulation A.[181]

6. Treatment Under Section 12(g)

a. Proposed Rules

Exchange Act Section 12(g) requires, among other things, that an issuer with total assets exceeding $10,000,000 and a class of equity securities held of record by either 2,000 persons, or 500 persons who are not accredited investors, register such class of securities with the Commission.[182] We did not propose to exempt Regulation A securities from mandatory registration under Section 12(g), but we solicited comment on whether Regulation A securities should be granted such an exemption, either conditionally or otherwise.

b. Comments on Proposed Rules

Commenters generally expressed support for some form of exemption from the registration requirements under Section 12(g). Numerous commenters recommended exempting Regulation A securities from Section 12(g).[183] Several of these commenters expressed concern that the Section 12(g) record holder count would decrease the utility of the Regulation A exemption by incentivizing issuers to sell to accredited investors over non-accredited investors, likely resulting in issuers electing to rely on a potentially less costly exemption, such as Rule 506 of Regulation D.[184] These commenters also expressed concern that Section 12(g) would decrease the utility of the exemption because secondary trading in otherwise unrestricted Regulation A securities might result in issuers inadvertently crossing the Section 12(g) registration threshold.[185] Other commenters questioned the extent to which Regulation A securities would be held in street name through brokers, which the proposal mentions as a factor that could potentially limit the impact of not proposing an exemption from Section 12(g).[186] Some commenters suggested that the reporting regime under Tier 2 would be a sufficient means by which issuers could provide investors with current information and that therefore Exchange Act reporting would be unnecessary.[187] Two commenters believed that the legislative history of the JOBS Act supported an exemption from Section 12(g).[188]

Several commenters recommended changing, delaying, or conditioning the application of Section 12(g)'s registration requirements, especially the corresponding Section 13 reporting obligations that come with registration.[189] One of these commenters recommended delaying the application of Exchange Act reporting requirements for Tier 2 issuers until the issuer's non-affiliate market capitalization reached $250 million, so long as the issuer filed reports under Regulation A.[190] This commenter believed that non-affiliate market capitalization was a superior proxy for market interest than the thresholds under Section 12(g) and noted that the Commission uses the measure in establishing primary S–3 eligibility. Another commenter recommended exempting initial Tier 2 issuers from all or part of Exchange Act reporting obligations until the earliest of the occurrence of several events.[191] Yet another commenter suggested exempting Tier 2 issuers from Exchange Act reporting until they reach a certain unspecified level of revenue or market capitalization.[192] Two commenters recommended deeming Tier 2 issuers' ongoing reports under Regulation A to satisfy the issuer's Exchange Act reporting obligations for a phase-in period.[193] One commenter recommended at least allowing for 2,000 holders of record (whether accredited or not) without being subject to Exchange Act registration requirements,[194] while two other commenters suggested eliminating the cap of 500 non-accredited investors.[195] One commenter conditioned its support for a conditional exemption from Section 12(g) on the Commission requiring Tier 2 issuers to remain current in their ongoing Regulation A reporting requirements.[196]

c. Final Rules

We are adopting today final rules that exempt securities issued in a Tier 2 offering from the provisions of Section 12(g) for so long as the issuer remains subject to, and is current in (as of its fiscal year end),[197] its Regulation A

[180] For a concurrent offering under Rule 506(b), an issuer will have to conclude that purchasers in the Rule 506(b) offering were not solicited by means of a Regulation A general solicitation. For example, the issuer may have had a preexisting substantive relationship with such purchasers. Otherwise, the solicitation conducted in connection with the Regulation A offering may preclude reliance on Rule 506(b). *See also* Rel. No. 33–8828 (Aug. 3, 2007) [72 FR 45116].

[181] *See* discussion in Section II.D. below.

[182] 15 U.S.C. 78*l*(g).

[183] B. Riley Letter; CFIRA Letter 1; CFIRA Letter 2; Fallbrook Technologies Letter; Letter from Jonathan Frutkin, Principal, The Frutkin Law Firm, PLC, March 24, 2014 (''Frutkin Law Letter''); Guzik Letter 1; Letter from Samuel S Guzik, October 25, 2014 (''Guzik Letter 2''); Heritage Letter; IPA Letter; Ladd Letter 2; Milken Institute Letter; MoFo Letter; SBIA Letter (recommending that the trigger be ''raised or remedied,'' but not explicitly calling for elimination); US Alliance Corp. Letter; U.S. Chamber of Commerce Letter; WR Hambrecht + Co Letter.

[184] CFIRA Letter 1; Fallbrook Technologies Letter; Frutkin Law Letter; Heritage Letter; IPA Letter; Milken Institute Letter; MoFo Letter; SBIA Letter; U.S. Chamber of Commerce Letter.

[185] *Id.*

[186] Guzik Letter 1 (noting the statements of other commenters); Heritage Letter; Ladd Letter 2 (citing discussions with various brokers); MoFo Letter; SBIA Letter; WR Hambrecht + Co Letter; *see also* OTC Markets Letter (highlighting difficulties associated with issuer securities becoming eligible for Depository Trust Company (DTC) services, which services typically limit the number of an issuer's record holders thereby minimizing the impact of the Section 12(g) mandatory registration provisions; further suggesting that companies issuing Regulation A securities be required to use registered transfer agents).

[187] B. Riley Letter; Fallbrook Technologies Letter; Milken Institute Letter; MoFo Letter.

[188] Ladd Letter 2; WR Hambrecht + Co Letter.

[189] Heritage Letter; KVCF Letter; McCarter & English Letter; Milken Institute Letter; MoFo Letter; Paul Hastings Letter; SBIA Letter.

[190] Paul Hastings Letter.

[191] McCarter & English Letter (suggesting the earliest of: (1) The last day of any fiscal year of the issuer during which it had annual gross revenues of $250 million; (2) the last day of any fiscal year following the fifth anniversary of the date of the first sale of equity securities under Regulation A; and (3) the date on which the issuer has an aggregate worldwide market value of voting and non-voting equity held by its non-affiliates of at least $75 million computed as of the last business day of the issuer's most recently completed second quarter).

[192] Milken Institute Letter.

[193] ABA BLS Letter (a 24 month phase-in period that could expire earlier if the company triggered Exchange Act reporting in some other manner); MoFo Letter.

[194] Heritage Letter.

[195] KVCF Letter; SBIA Letter.

[196] MoFo Letter.

[197] The determination as to ''current'' reporting status is determined at the time of fiscal year end in reference to the filing of all periodic reports, including special financial reports, required to be filed during such fiscal year. For these purposes, a newly qualified issuer that at fiscal year end has not yet been obligated to file a periodic report, including, if applicable, a special financial report, would be considered ''current'' for these purposes.

periodic reporting obligations.[198] Additionally, in order for the conditional exemption to apply, issuers are required to engage the services of a transfer agent registered with the Commission pursuant to Section 17A of the Exchange Act. The final rules also provide that the exemption from Section 12(g) is only available to companies that meet requirements similar to those in the ''smaller reporting company'' definition under Securities Act and Exchange Act rules.[199] As such, the conditional exemption in the final rules is limited to issuers that have a public float of less than $75 million, determined as of the last business day of its most recently completed semiannual period,[200] or, in the absence of a public float, annual revenues of less than $50 million, as of the most recently completed fiscal year.[201] An issuer that exceeds either of the thresholds, in addition to exceeding the threshold in Section 12(g) of the Exchange Act, would be granted a two-year transition period before it would be required to register its class of securities pursuant to Section 12(g), provided it timely files all ongoing reports due pursuant to Rule 257 during such period.[202] Section 12(g) registration will only be required if, on the last day of the fiscal year in which the company exceeded the public float or annual revenue threshold, the company has total assets of more than $10 million and the class of equity securities is held by more than 2,000 persons or 500 persons who are not accredited investors.[203] In such circumstances, an issuer that exceeds the thresholds in Section 12(g) and Rule 12g5–1(a)(7) would be required to begin reporting under the Exchange Act the fiscal year immediately following the end of the two-year transition period.[204] An issuer entering Exchange Act reporting will be considered an ''emerging growth company'' to the extent the issuer otherwise qualifies for such status.[205]

In determining to provide a conditional exemption from the provisions of Section 12(g), we have considered a number of factors. First, we believe the conditional exemption we are adopting today is consistent with the intent behind the original enactment of Section 12(g) to the extent it ensures that relevant information about issuers will be made routinely available to investors and the marketplace.[206] Second, we believe the additional requirement that Regulation A issuers use a registered transfer agent will provide an important investor protection in this context. The use of a transfer agent registered under the Exchange Act, which, in the absence of a conditional exemption from the provisions of Section 12(g), would be required of issuers when they register under the Exchange Act, will provide added comfort that securityholder records and secondary trades will be handled accurately. Third, we believe that phasing out the exemption once companies grow and expand their shareholder base is consistent with the intent behind Title IV of the JOBS Act, which was enacted to facilitate smaller company capital formation.[207] Finally, we are concerned that, as commenters suggested, the lack of an exemption from mandatory registration under the Exchange Act may undermine the utility of amended Regulation A either by discouraging use of the exemption altogether or by dissuading issuers from making sales to non-accredited investors in Regulation A offerings in an effort to avoid the application of Section 12(g).

While we believe, as we noted in the Proposing Release, that the Section 12(g) record holder threshold continues to provide an important baseline above which issuers should generally be subject to the disclosure obligations of the Exchange Act, we are persuaded that this need not be the case where an issuer is a smaller company that is subject to, and current in, its periodic reporting obligations under Tier 2 of Regulation A and engages the services of a transfer agent that is registered with the Commission under the Exchange Act. Regulation A, as amended in the final rules, requires issuers that conduct Tier 2 offerings to provide periodic disclosure to their investors and updates for certain important corporate events.[208] While such reports provide less information than is required of an Exchange Act reporting company, we believe a conditional exemption from registration under Section 12(g) is warranted for smaller Tier 2 issuers since such companies are required to provide investors with ongoing information about themselves and the securities offered, and the ongoing reporting regime we are adopting today is more appropriately tailored for such companies. Additionally, in order to address situations where an issuer that conducts a Tier 2 offering could remain subject to its ongoing reporting requirements indefinitely and thereby avoid having to comply with Exchange Act reporting requirements regardless of the size of its shareholder base, we note that the exemption from Section 12(g) is conditional and that an issuer that does not meet its conditions, including the limitation on public float and annual revenues, will be required to register under the Exchange Act.

C. Offering Statement

Section 3(b)(2)(G)(i) gives the Commission discretion to require an offering statement in such form and with such content as it determines necessary in the public interest and for the protection of investors.[209] The provision permits electronic filing of

[198] Rule 12g5–1(a)(7).

[199] ''Smaller reporting company'' is defined in Securities Act Rule 405, 17 CFR 230.405, Exchange Act Rule 12b–2, 17 CFR 240.12b–2, and Item 10(f)(1) of Regulation S–K, 17 CFR 229.10(f)(1). The provision of the smaller reporting company definition relating to initial registration statements under the Securities Act is not applicable to exempt offering pursuant to Regulation A. *See* Item 10(f)(1)(a)(ii) of Regulation S–K, 17 CFR 229.10(f)(a)(ii). The final rules do not therefore incorporate this concept for purposes of Rule 12g5–1(a)(7). *See* Rule 12g5–1(a)(7).

[200] Consistent with the smaller reporting company definition, an issuer will calculate ''public float'' by multiplying the aggregate worldwide number of shares of its common equity securities held by non-affiliates by the price at which such securities were last sold (or the average bid and asked prices of such securities) in the principal market for such securities. Rule 12g5–1(a)(7). *See also, e.g.,* Item 10(f)(1)(i) of Regulation S–K.

[201] Rule 12g5–1(a)(7). The Commission adopted the smaller reporting company regime in 2007. *See* SEC Rel. No. 33–8876 (Dec. 19, 2007) [73 FR 934]. Some commentators, such as the Commission's Advisory Committee on Small and Emerging Companies, have suggested that the Commission revisit the smaller reporting company regime, including the definitional thresholds. *Recommendations Regarding Disclosure and Other Requirements for Smaller Public Companies,* Securities and Exchange Commission, Advisory Committee on Small and Emerging Companies (February 1, 2013), at 2–3, *available at: http://www.sec.gov/info/smallbus/acsec/acsec-recommendation-032113-smaller-public-co-ltr.pdf.* Although the Commission has not yet responded to this recommendation, in considering any potential changes to the smaller reporting company regime, we would expect to consider whether corresponding changes to the thresholds included in Rule 12g5–1(a)(7) should also be made, taking into account how the Regulation A regime is working.

[202] *Id.*

[203] 15 U.S.C. 78*l*(g).

[204] *Id. See* Section II.E.4.b(2). below for a discussion on suspension or termination of the duty to file ongoing reports pursuant to Rule 257.

[205] *See* fn. 726 below and accompanying text.

[206] Section 12(g) was originally enacted by Congress as a way to ensure that investors in over-the-counter securities about which there was little or no information, but which had a significant shareholder base, were provided with ongoing information about their investment. *See, generally, Report of the Special Study of Securities Markets of the Securities and Exchange Commission,* House Document No. 95, House Committee on Interstate and Foreign Commerce, 88th Cong., 1st Sess. (1963), at 60–62.

[207] *See, e.g.,* H.R. Rep. No. 112–206 (2011), at 4 (''Small companies are critical to economic growth in the United States. Amending Regulation A to make it viable for small companies to access capital will permit greater investment in these companies, resulting in economic growth and jobs.'').

[208] *See* Rule 257.

[209] 15 U.S.C. 77c(b)(2)(G)(i).

offering statements, and provides a non-exhaustive list of potential content that may be required in the offering statement, including audited financial statements, a description of the issuer's business operations, financial condition, corporate governance principles, use of investor funds, and other appropriate matters.

1. Electronic Filing; Delivery Requirements

a. Proposed Rules

Consistent with the language of Section 3(b)(2)(G)(i), we proposed to require Regulation A offering statements to be filed with the Commission electronically on EDGAR.[210] We further proposed to amend Form 1–A, but to continue to have the form consist of three parts:

- *Part I:* An eXtensible Markup Language (XML) based fillable form;
- *Part II:* A text file attachment containing the body of the disclosure document and financial statements; and
- *Part III:* Text file attachments, containing the signatures, exhibits index, and the exhibits to the offering statement.[211]

We further proposed to require all other documents required to be submitted or filed with the Commission in conjunction with a Regulation A offering, such as ongoing reports, to be submitted or filed electronically on EDGAR.[212]

Additionally, we proposed an access equals delivery model for Regulation A final offering circulars.[213] Under the proposed rules, issuers would be required to include a notice in any preliminary offering circular used that would inform potential investors that the issuer may satisfy its delivery obligations for the final offering circular electronically.[214] As with registered offerings, we also proposed aftermarket delivery obligations for dealers that would be satisfied if the final offering circular is filed and available on EDGAR and the appropriate notice was given by the dealer.[215]

Consistent with prior Commission releases on the use of electronic media for delivery purposes, we proposed that ''electronic-only'' offerings of Regulation A securities would not be prohibited, but an issuer and its participating intermediaries would have to obtain the consent of investors to the electronic delivery of:

- The preliminary offering circular and other information, but not the final offering circular, in instances where, upon qualification, the issuer plans to sell Regulation A securities based on offers made using a preliminary offering circular; and
- all documents and information, including the final offering circular, when the issuer sells Regulation A securities based on offers conducted during the post-qualification period using a final offering circular.[216]

We further proposed to maintain the existing requirements in Regulation A, which require dealers to deliver a copy of the current offering circular to purchasers for sales that take place within 90 calendar days after qualification.[217] We proposed to update and amend Rule 251(d)(2)(i)[218] to require issuers and participating broker-dealers to deliver only a preliminary offering circular to prospective purchasers[219] at least 48 hours in advance of sale when a preliminary offering circular is used during the prequalification period to offer such securities to potential investors. We also proposed to continue to require a final offering circular to accompany or precede any written communication that constitutes an offer in the post-qualification period.[220]

In addition to the revised delivery requirements discussed above, we proposed to add a provision analogous to Rule 173,[221] which would require issuers, underwriters, and dealers, not later than two business days after completion of a sale, to provide purchasers with a copy of the final offering circular or a notice stating that the sale occurred pursuant to a qualified offering statement.[222] As proposed, the notice must include the Web site address[223] where the final offering circular, or the offering statement of which such final offering circular is part, may be obtained on EDGAR and contact information sufficient to notify a purchaser how it may request and receive a final offering circular from the issuer.[224]

We further proposed to allow an issuer to withdraw an offering statement, with the Commission's consent, if none of the securities that are the subject of such offering statement has been sold and such offering statement is not the subject of a Commission order temporarily suspending a Regulation A exemption. Under the proposed rules, the Commission also would be able to declare an offering statement abandoned if the offering statement has been on file with the Commission for nine months without amendment and has not become qualified. These withdrawal and abandonment procedures are similar to the ones that apply to registration statements under the Securities Act.[225]

b. Comments on the Proposed Rules

No commenters opposed the proposed requirement that issuers be required to file offering statements and related material electronically with the Commission on EDGAR, while two commenters expressly supported such a requirement.[226] One commenter recommended only requiring preliminary or final offering circular delivery 48 hours in advance of sale for initial public offerings and not for offerings by issuers that are already subject to Tier 2 ongoing reporting requirements.[227] This commenter also recommended eliminating dealer offering circular delivery requirements for Tier 2 issuers that are subject to ongoing reporting.

A few commenters opposed an access equals delivery model of final offering circular delivery.[228] These commenters raised concerns about the perceived challenge of finding these materials on EDGAR and not requiring delivery 48 hours in advance of sale in all circumstances.

One commenter recommended, in addition to requiring electronic filing on EDGAR, requiring issuers to maintain a corporate Web site where the public may access copies of all non-confidential filings in a timely manner so that investors not familiar with EDGAR may access the most complete information provided to the

[210] *See* proposed Rule 252(e).

[211] *See* Proposing Release, at Section II.C.1.

[212] *Id.*

[213] *Id.*

[214] *See* proposed Rule 254(a).

[215] As proposed, a dealer would generally be required to deliver a copy of the current offering circular to purchasers for all sales that occur within 90 calendar days after qualification, although this requirement would be satisfied when the final offering circular is filed and available on EDGAR and the dealer has otherwise complied with the obligation to deliver a notice of sales to the purchaser not later than two business days after completion of such sale. *See* proposed Rules 251(d)(2)(ii)–(iii).

[216] *See* Proposing Release, at Section II.C.1.

[217] *See* proposed Rule 251(d)(2)(iii).

[218] 17 CFR 230.251(d)(2)(i) (2014).

[219] *See* proposed Rule 251(d)(2)(i).

[220] *See* proposed Rule 251(d)(1)(iii).

[221] 17 CFR 230.173.

[222] *See* proposed Rule 251(d)(2)(ii).

[223] In the case of an electronic-only offering, the notice must include an active hyperlink to the final offering circular or to the offering statement of which such final offering circular is part.

[224] *See* proposed Rule 251(d)(2)(ii).

[225] *See* Securities Act Rule 477, 17 CFR 230.477, and Rule 479, 17 CFR 230.479.

[226] *See* MCS Letter; OTC Markets Letter.

[227] Paul Hastings Letter.

[228] Massachusetts Letter 2; NASAA Letter 2; WDFI Letter.

Commission.[229] In addition to suggested changes to the filing process itself, several commenters encouraged the Commission to find ways to reduce the staff's review time for offering statements.[230]

c. Final Rules

(1) Filing Requirements

We are adopting provisions for electronic filing and delivery requirements in the final rules for Regulation A substantially as proposed.[231] We agree with commenters that support requiring electronic filing of offering and related materials and believe that this requirement will ultimately benefit issuers and investors by streamlining the offering process. As adopted, issuers must file their Regulation A offering statements with the Commission electronically on EDGAR.[232] Further, as proposed, we are amending Form 1–A to consist of the following three parts:

- *Part I:* An eXtensible Markup Language (XML) based fillable form, which captures key information about the issuer and its offering using an easy to complete online form, similar to Form D, with drop-down menus, indicator boxes or buttons, and text boxes, and assists issuers in determining their ability to rely on the exemption. The XML-based fillable form will provide a convenient means of assembling and transmitting information to EDGAR, without requiring the issuer to purchase or maintain additional software or technology;[233]
- *Part II:* A text file attachment containing the body of the disclosure document and financial statements, formatted in HyperText Markup Language (HTML) or American Standard Code for Information Interchange (ASCII) to be compatible with the EDGAR filing system;[234] and
- *Part III:* Text file attachments, containing the signatures, exhibits index, and the exhibits to the offering statement, formatted in HTML or ASCII to be compatible with the EDGAR filing system.[235]

As proposed and adopted, all other documents required to be submitted or filed with the Commission in conjunction with a Regulation A offering, such as ongoing reports, must generally be submitted or filed electronically on EDGAR.[236] As materials will be available on EDGAR, we do not see a need to separately require issuers to maintain a corporate Web site where the public may access all non-confidential filings. Issuers may, however, elect to provide the filings on their Web site or to their EDGAR filing page. Consistent with current Regulation A, there are no filing fees associated with the Regulation A filing and qualification process.

We believe the approach to electronic filing adopted today will be both practical and useful for issuers of Regulation A securities, investors in such securities, and other market participants. Issuers will be able to maintain better control over their filing process, reduce the printing costs associated with filings, obtain immediate confirmation of acceptance of an offering statement, and ultimately save time in the qualification process. Investors will gain real-time access to the information contained in Regulation A filings.[237] We anticipate that the efficiency of the Regulation A market should improve with the increased accessibility of information about Regulation A issuers and offerings. Additionally, as with registered offerings, electronic filing on EDGAR will allow for more efficient storing, processing, and disseminating of Regulation A filings than paper filings, which should improve the efficiency of the staff review and qualification processes.

Electronic filing also will facilitate the capture of important financial and other information about Regulation A issuers and offerings that will enable the Commission and market participants to analyze any market that develops in Regulation A securities, including, for example, information about issuer size, issuer location, key financial metrics, summary information about securities offered and offering amounts, the jurisdictions in which offerings take place, and expenses associated with Regulation A offerings.[238]

We appreciate that requiring EDGAR filing will impose some new costs on issuers, as addressed more fully in the Economic Analysis section of the release.[239] We do not, however, believe that the incremental cost associated with the EDGAR filing requirements justifies maintaining a paper-only filing requirement. On the contrary, we believe that the potential additional cost to issuers associated with the EDGAR filing requirement should be minimal and electronic filing on EDGAR would eliminate any processing delays and costs otherwise associated with the current paper filing system, such as printing or mailing costs.

(2) Delivery Requirements

We are adopting, as proposed, an access equals delivery model for Regulation A final offering circulars when sales are made on the basis of offers conducted during the prequalification period and the final offering circular is filed and available on EDGAR. The expanded use of the Internet and continuing technological developments suggest that we should update the final offering circular delivery method for Regulation A in a manner that is consistent with similar updates to delivery requirements for registered offerings.[240] Contrary to the views of some commenters,[241] we do not believe that access to EDGAR generally has proven to be a challenge for investors in registered offerings since the adoption of the Securities Offering Reform Release in 2005. We also do not believe that it will be a challenge for investors under Regulation A or raise investor protection concerns, particularly in light of our final delivery requirements (including, where applicable, the inclusion of hyperlinks to offering materials on EDGAR that must be provided to investors by issuers and intermediaries).[242] Therefore, where sales of Regulation A securities occur

[229] Ladd Letter 2.

[230] Frutkin Law Letter; Heritage Letter (suggesting that the review time needs to be reduced by two-thirds); Letter from Gregory S. Fryer, Esq., Partner, Verrill Dana LLP, February 28, 2014 (''Verrill Dana Letter 1'') (recommending providing guidance to issuers, staff training, and more discretion to the staff to make materiality determinations and to work informally with issuers); Letter from Ted J. Coombs, Chief Technology Officer, Workers On Call, March 24, 2014 (''WOC Letter'').

[231] In conjunction with the adoption of final rules for electronic filing and delivery, we are making clarifying revisions to the proposed rules that renumber some of the proposed provisions in the final rules. *See, e.g.,* Rule 251(e), (f) (originally proposed Rules 252(c), (e), respectively).

[232] *See* Rule 101(a)(vii), (xvii) of Regulation S–T, 17 CFR 232.101(a)(xvii); *see also* Rule 251(f). As proposed, and in conjunction with this change, Item 101(c)(6) of Regulation S–T (17 CFR 232.101(c)(6)) is revised so that it no longer prohibits electronic submission of filings related to Regulation A offerings.

[233] Part I (Notification) of Form 1–A. As discussed more fully in Section II.C.3.a. below, the cover page and Part I of current Form 1–A would be converted into, and form the basis of, the XML-based fillable form.

[234] Part II (Offering Circular) of Form 1–A. *See* discussion in Section II.C.3.b. below.

[235] Part III (Exhibits) of Form 1–A. *See* discussion in Section II.C.3.c. below.

[236] For a discussion on the ongoing reporting requirements, *see* Section II.E. below.

[237] Investors would not, however, have immediate access to non-public submissions of draft offering statements. *See* discussion in Section II.C.2. below.

[238] The specific disclosure requirements included in the XML-based fillable form are discussed more fully in Section II.C.3.a. below.

[239] *See* Section III. below.

[240] *See* Securities Offering Reform, Rel. No. 33–8591.

[241] *See* fn. 228 above.

[242] *See* Rule 251(d)(2), Rule 254(a), and Rule 255(b) and (d).

after qualification on the basis of offers made using a preliminary offering circular, issuers and intermediaries can presume that investors have access to the Internet and may satisfy their delivery requirements for the final offering circular by filing it on EDGAR.[243] Issuers are, however, required to include a notice in any preliminary offering circular that will inform potential investors that the issuer may satisfy its delivery obligations for the final offering circular electronically.[244]

Further, as proposed, ''electronic-only'' offerings of Regulation A securities will be permitted under the final rules, provided that issuers and intermediaries comply with relevant Commission guidance.[245] Specifically, in such offerings, an issuer and its participating intermediaries must obtain the consent of investors to, or otherwise be able to evidence the receipt of, the electronic delivery of:

- The preliminary offering circular and information other than the final offering circular, in instances where the issuer sells Regulation A securities based on offers made using a preliminary offering circular; and
- all documents and information, including the final offering circular, when the issuer sells Regulation A securities based on offers made during the post-qualification period using a final offering circular.

As we noted in the Proposing Release, in light of the proposed requirements for electronic delivery and in order to be consistent with requirements for registered offerings, we believe it appropriate to permit dealers, during the aftermarket delivery period, to be deemed to satisfy their final offering circular delivery requirements if such document is filed and available on EDGAR.[246] We are amending Rule 251(d)(2)(ii) of existing Regulation A to make clear that dealers, like issuers and intermediaries, can also rely on the provisions for access equals delivery.[247] Additionally, the amendment clarifies that a dealer can rely on access equals delivery for a final offering circular provided it complies with the requirements of Rule 251(d)(2)(ii). This clarifying amendment is necessary to avoid any confusion that the final rules could be read to impose a double delivery requirement on dealers during the aftermarket delivery period.

Separately, we are modifying the terms of Rule 251(d)(2)(ii) to make it more consistent with the dealer delivery requirements for registered offerings under Securities Act Rule 174.[248] As proposed, the rules would have required dealers in all circumstances to deliver a copy of the current offering circular to purchasers for sales that take place within 90 calendar days after qualification.[249] Consistent with the suggestion of one commenter,[250] we are revising the proposed rules to more closely align the Regulation A delivery requirements with those required in Securities Act Rules 174(b) and (d).[251] We, therefore, are adopting the proposed 90 calendar day dealer delivery requirement, but eliminating the dealer delivery requirement when the issuer is subject immediately prior to filing the offering statement to Tier 2 ongoing reporting[252] and reducing the length of the delivery requirement to 25 calendar days after the later of the qualification date of the offering statement or the first bona fide offering of securities if the securities will be listed on a national securities exchange.[253] As adopted, the final rules reduce dealer aftermarket delivery requirements, which should aid dealers in compliance with the final rules.

The final rules also update and amend Rule 251(d)(2)(i) to align with changes in the prospectus delivery requirements for registered offerings that have occurred since these requirements were last updated in Regulation A.[254] We believe the delivery of the preliminary offering circular to potential investors before they make an investment decision on the basis of information provided during the prequalification period remains an important investor protection that the final rules should preserve, particularly in light of the proposed expanded use of ''testing the waters'' solicitation materials to include the period of time after non-public submission or filing of the offering statement, as discussed further in Section II.D. below.[255] We also recognize that updating and amending Regulation A's offering circular delivery requirements will likely benefit market participants by minimizing discrepancies between the requirements of broker-dealers in Regulation A and registered offerings.

We therefore are amending, as proposed, Rule 251(d)(2)(i) to require issuers and participating broker-dealers to deliver only a preliminary offering circular to prospective purchasers[256] at least 48 hours in advance of sale only when a preliminary offering circular is used during the prequalification period to offer such securities to potential investors.[257] To make the final rules more consistent with the requirements of Exchange Act Rule 15c2–8(b) for issuers who already provide continuous, ongoing information to investors and the market, the final rules do not require an issuer or its intermediaries to deliver a preliminary offering circular at least 48 hours in advance of sale where the issuer is already subject to a Tier 2 reporting obligation. In such instances, however, the issuer and its intermediaries will otherwise remain subject to the general delivery requirements of the rules, including compliance with the requirements for making offers pursuant to Rule 251(d)(1) and for including a preliminary offering circular in any solicitation materials used after filing the offering statement with the Commission pursuant to Rule 255. As proposed and adopted, the delivery requirements under the final rules apply to both issuers and

[243] *Cf.* Rel. No. 33–8591, at 244.

[244] *See* Rule 254(a).

[245] An electronic-only offering is an offering in which investors are permitted to participate only if they agree to accept the electronic delivery of all documents and other information in connection with the offering. *See* Rel. No. 34–37182 (May 9, 1996) [61 FR 24644] (Use of Electronic Media by Broker-Dealers, Transfer Agents and Investment Advisers for Delivery of Information), Rel. No. 34–42728 (Apr. 28, 2000) [65 FR 25843] (Use of Electronic Media), and Rel. No. 33–7233 (Oct. 6, 1995) [60 FR 53458] (Use of Electronic Media for Delivery Purposes).

[246] *See* Proposing Release, at Section II.C.1.

[247] *See* Rule 251(d)(2)(ii). Notwithstanding the final delivery requirements, broker-dealers remain subject to the anti-fraud provisions of Section 15 of the Exchange Act.

[248] While we have made clarifying revisions to proposed Rule 251(d)(2)(iii) and renumbered it as Rule 251(d)(2)(ii), the final rule is consistent with Rule 174, as there is no need for an analog to Rule 174(g), which covers the dealer delivery obligations in registered offerings by blank check companies under Rule 174(g). Blank check companies are ineligible issuers under Regulation A. *See* Rule 251(b).

[249] *See* proposed Rule 251(d)(2)(iii).

[250] Paul Hastings Letter.

[251] *See* 17 CFR 230.174(b), (d).

[252] Rule 251(d)(2)(ii)(D); *see also* Securities Act Rule 174(b).

[253] Rule 251(d)(2)(ii)(C); *see also* Securities Act Rule 174(d).

[254] *See* Proposing Release, at Section II.C.1.

[255] *See* Securities Offering Reform, Rel. No. 33–8591, at 245 (noting that access equals delivery is not appropriate for preliminary prospectus delivery obligations in IPOs because it is important for potential investors to be sent the preliminary prospectus).

[256] Prospective purchasers include any person that has indicated an interest in purchasing the Regulation A securities before qualification, including, but not limited to, those investors that respond to an issuer's solicitation materials. *See* Rule 251(d)(2)(i).

[257] In accordance with time of sale provisions discussed in Securities Offering Reform, *see* Rel. No. 33–8591, at p. 173 *et seq.,* the final rules provide that the 48-hour delivery obligation must be made in advance of ''sale'' rather than the ''mailing of the confirmation of sale.'' *See also* Section II.D. below for a discussion of the delivery requirements for solicitation materials used after publicly filing the offering statement.

participating broker-dealers.[258] We believe these delivery requirements are an important investor protection that should apply to issuers in advance of sale, in addition to their intermediaries, and is consistent with current Regulation A.[259] We are also adopting, as proposed, the requirement that a final offering circular must accompany or precede any written communications that constitute offers in the post-qualification period.[260]

In addition to the revised delivery requirements discussed above, we are adopting, as proposed, final rules analogous to Securities Act Rule 173.[261] Rule 251(d)(2)(ii) requires issuers and participating broker-dealers, not later than two business days after completion of the sale, to provide the purchaser with a copy of the final offering circular or a notice stating that the sale occurred pursuant to a qualified offering statement.[262] The notice must include the URL [263] where the final offering circular, or the offering statement of which such final offering circular is part, may be obtained on EDGAR and contact information sufficient to notify a purchaser where a request for a final offering circular can be sent and received in response.

(3) Withdrawal of an Offering Statement

The final rules will, as proposed, permit an issuer to withdraw an offering statement, with the Commission's consent, if none of the securities that are the subject of such offering statement have been sold and such offering statement is not the subject of a Commission order temporarily suspending a Regulation A exemption.[264] The final rules also permit, as proposed, the Commission to declare an offering statement abandoned if the offering statement has been on file with the Commission for nine months without amendment and has not become qualified.[265] These withdrawal and abandonment procedures are similar to the ones that apply to issuers in registered offerings.

2. Non-Public Submission of Draft Offering Statements

a. Proposed Rules

We proposed to allow the non-public submission of draft offering statements by issuers of Regulation A securities. As we noted in the Proposing Release, such submissions would not be subject to the statutorily-mandated confidentiality of draft initial public offering (IPO) registration statements confidentially submitted by ''emerging growth companies'' [266] under Title I of the JOBS Act.[267] Instead, where an issuer seeks to non-publicly submit a draft offering statement, the proposal indicated it could do so in compliance with the Commission's Rule 83.[268] We also sought comment on whether we should instead adopt a new rule relating to confidential treatment of draft offering statements in Regulation A.

Under the proposed rules, issuers whose securities have not been previously sold pursuant to a qualified offering statement under Regulation A or an effective registration statement under the Securities Act would be permitted to submit to the Commission a draft offering statement for non-public review. As with the confidential submission of draft registration statements by emerging growth companies, all non-public submissions of draft offering statements would be submitted via EDGAR. The initial non-public submission, all non-public amendments thereto, and correspondence with Commission staff regarding such submissions would be required to be publicly filed and available on EDGAR as exhibits to the offering statement not less than 21 calendar days before qualification of the offering statement.[269] Unlike emerging growth companies in registered offerings, which must publicly file any confidential submissions not later than 21 calendar days before a road show, the timing requirements for filing by issuers seeking qualification under Regulation A would not depend on whether or not the issuer conducts a road show.

b. Comments on Proposed Rules

Commenters were generally supportive of the proposed non-public submission process for Regulation A offerings.[270] One commenter recommended keeping all filings confidential other than the final qualified version and possibly any interim version actually used in conjunction with solicitation materials.[271] Another commenter recommended requiring the inclusion of a legend on non-public offering statements so that the confidentiality of such submissions would be automatic, without the need for a separate confidentiality request,[272] while another commenter recommended treating the proposed non-public submissions the same way that draft registration statements are treated under Title I of the JOBS Act.[273]

c. Final Rules

We are adopting rules that will, as proposed, provide for the submission of non-public draft offering statements under Regulation A.[274] In a change from the proposal, however, the final rules do not require an issuer seeking non-public staff review of its draft offering statement to submit such draft pursuant to the Commission's Rule 83. Instead, all such draft offering statements under Rule 252(a) shall receive non-public review. The final rules only permit

[258] Issuers may rely on reasonable assurances of delivery from participating broker-dealers to satisfy their delivery obligations.

[259] *See also* 17 CFR 230.460 (Distribution of Preliminary Prospectus in Registered Offerings). Additionally, with continued improvements in information and communication technologies, we believe direct public offerings (*i.e.,* offerings conducted by an issuer without the involvement of an underwriter) may become a more attractive option for certain issuers. For that reason, it is important that the advance preliminary offering circular delivery requirements for participating broker-dealers apply equally to issuers.

[260] *See* Rule 251(d)(1)(iii). For written confirmations and notices of allocation in the post-qualification period, issuers and intermediaries may rely on the EDGAR filing of the final offering circular to satisfy any delivery requirements that may apply under Rule 251(d)(1)(iii). This approach is consistent with Rule 172(a) in the context of registered offerings. For a discussion of Rule 172(a), *see* Securities Offering Reform, Rel. No. 33–8591, at 251.

[261] 17 CFR 230.173.

[262] *See* Rule 251(d)(2)(ii).

[263] As proposed, the final rules make clear that, in the case of an electronic-only offering, the notice must include an active hyperlink to the final offering circular or to the offering statement of which such final offering circular is part. *See* Rule 251(d)(2)(ii)(E).

[264] *See* Rule 259(a). As discussed in Section II.C.5. below in the context of qualification, we are amending the delegated authority of the director of the Division of Corporation Finance to permit the Division to consent to the withdrawal of an offering statement or to declare an offering statement abandoned, as opposed to requiring the Commission to issue an order. Rule 30–1(b)(3), 17 CFR 200.30–1(b)(3).

[265] *See* Rule 259(b).

[266] Under Section 2(a)(19) of the Securities Act, an ''emerging growth company'' is defined as, among other things, an issuer that had total annual gross revenues of less than $1 billion during its most recently completed fiscal year. 15 U.S.C. 77b(a)(19).

[267] Under Section 6(e)(2) of the Securities Act, confidential submissions of draft registration statements by emerging growth companies are protected from compelled disclosure under the Freedom of Information Act (FOIA) (5 U.S.C. 552). There is no similar provision under Section 3(b) of the Securities Act.

[268] *See* proposed Rule 252(f); *see also* Proposing Release, at fn. 212.

[269] *See* proposed Rule 252(f).

[270] BIO Letter; McCarter & English Letter; Paul Hastings Letter; Richardson Patel Letter.

[271] Verrill Dana Letter 1.

[272] McCarter & English Letter. The Proposing Release indicated that issuers seeking to non-publicly submit offering statements should submit such statements under cover of the Commission's Rule 83, 17 CFR 200.83, which deals with confidential treatment requests.

[273] Milken Institute Letter (recommending that the Commission seek Congressional authority, if necessary, to protect these submissions from requests under the FOIA.

[274] *See* Rule 252(d).

issuers whose securities have not been previously sold pursuant to a qualified offering statement under Regulation A or an effective registration statement under the Securities Act to submit to the Commission a draft offering statement for non-public review. Consistent with the treatment of draft registration statements in registered offerings by emerging growth companies, a non-publicly submitted offering statement must be substantially complete upon submission in order for staff of the Division of Corporation Finance to begin its review. All non-public submissions of draft offering statements must be submitted via EDGAR, and the initial non-public submission, all non-public amendments thereto, and correspondence submitted by or on behalf of the issuer to the Commission staff regarding such submissions must be publicly filed and available on EDGAR as exhibits to the offering statement not less than 21 calendar days before qualification of the offering statement.

We do not believe, as was suggested by at least one commenter,[275] that requiring issuers to file only the qualified version of the offering statement and any earlier versions used in conjunction with solicitation materials would provide investors with sufficient disclosure to make informed investment decisions. Further, in light of the preemption of state securities laws registration requirements for Tier 2 offerings in the final rules,[276] the 21 calendar day filing requirement will insure that state securities regulators are able to require first-time issuers that non-publicly submit draft offering statements to file such material with them for a minimum of 21 calendar days before any potential sales to investors in their respective states.[277] Unlike emerging growth companies, the timing requirement for filing by issuers seeking qualification under Regulation A does not depend on whether or not the issuer conducts a road show or tests the waters in a contemplated offering before qualification.[278]

Unlike Title I of the JOBS Act, Title IV does not provide for confidential submissions of offering statements under Regulation A.[279] Consequently, the requirements of the FOIA are controlling on the scope of the Commission's ability to adopt confidentiality rules for non-publicly submitted offering statements. We are therefore not adopting any specific additional rule or requirement for non-public submissions that would deem such submissions ''confidential.'' However, where an issuer seeks confidential treatment for non-publicly submitted offering materials, or any portion thereof, for which it believes an exemption from the FOIA exists, it should continue to do so in compliance with the Commission's Rule 83.[280]

While non-publicly submitted offering statements must be submitted electronically on EDGAR, the Commission and its staff will not make such offering statements publicly available on EDGAR as a matter of course.[281] The treatment of non-public submissions in this regard is consistent with the Commission staff's approach to the public availability of draft registration statements submitted by foreign private issuers for registered offerings.[282] As there is no statutory basis for withholding non-public submissions from production, absent an exemption from the FOIA,[283] issuers that rely on our provisions for non-public submission should be aware that the Commission may, under certain circumstances, be compelled to provide such materials to a requesting party (or to otherwise make them publicly available) before the date on which an issuer would otherwise have been required to publicly file on EDGAR.

3. Form and Content

Section 3(b)(2)(G)(i) of the Securities Act identifies certain disclosure requirements that the Commission may require for offerings relying on the Regulation A exemption. The requirements largely coincide with the existing offering statement disclosure requirements of Form 1–A, such as financial statements,[284] a description of the issuer's business operations,[285] financial condition,[286] and use of investor funds.[287] The proposed rules, comments received on the proposed rules, and the final rules being adopted today for each of Part I, II, and III of Form 1–A are discussed in detail below.

a. Part I (Notification)

(1) Proposed Rules

Part I of Form 1–A serves as a notice of certain basic information about the issuer and its proposed offering, which also helps to confirm the availability of the exemption.[288] As proposed, Part I of Form 1–A would be converted into an online XML-based fillable form with indicator boxes or buttons and text boxes and would be filed online with the Commission.[289] The information would be publicly available on EDGAR, as an online data cover sheet, but not otherwise required to be distributed to investors.[290]

(2) Comments on Proposed Rules

We received several comments with recommendations specific to certain items on Part I of Form 1–A. With respect to Item 1 of Part I, one commenter recommended defining the term ''publicly traded,'' eliminating the ''Financial Statements'' section of Item 1 of Part I or conforming it to the existing disclosures required by Item 301 of Regulation S–K, or conforming the line item descriptions in Item 1 to those in Regulation S–X.[291] Other commenters recommended clarifying that an auditor and related fees need not

[275] Verrill Dana Letter 1.

[276] *See* discussion in Section II.H. below.

[277] Notwithstanding the final rules that provide for the preemption of state securities laws' registration and qualification requirements of Tier 2 offerings, state securities regulators retain, among other things, their authority to require the filing with them of any documents filed with the Commission. *See, e.g.,* Section 18(c)(2) of the Securities Act. The timing of filing requirements at the state level, however, may reduce the time period in which an offering statement and related materials are on file with the state before Commission qualification.

[278] *See* Section II.D. below for a discussion on the timing and requirements for the use of solicitation materials under Rule 255. Regulation A's testing the waters provisions encompass a variety of activities, including, but not limited to, activities that could constitute a traditional road show.

[279] *See* fn. 267 above.

[280] *See* 17 CFR 200.83. Where an issuer seeks confidential treatment of any information included in a publicly filed offering statement or related materials, it should do so in compliance with Securities Act Rule 406. *See* 17 CFR 230.406. *See* Rule 251(e) (confidential treatment).

[281] This is in contrast to publicly filed draft and final offering statements that will be made automatically available on EDGAR at the time of filing.

[282] *See* Non-Public Submissions from Foreign Private Issuers, *available at: http://www.sec.gov/divisions/corpfin/internatl/nonpublicsubmissions.htm.*

[283] *See* 5 U.S.C. 552.

[284] *See* Form 1–A, Part II, Part F/S (2014). Section 3(b)(2)(G)(i) also contemplates that the Commission may require issuers to submit audited financial statements. Currently, the financial statements required under Regulation A need to be audited only if the issuer has them otherwise available.

[285] *Id.,* Part II, *e.g.,* Model B, Item 6 (Description of Business).

[286] *Id., e.g.,* Part F/S.

[287] *Id., e.g.,* Item 5 (Use of Proceeds to Issuer).

[288] Rel. No. 33–6275 [46 FR 2637], at 2638.

[289] As proposed, the cover page to current Form 1–A would be eliminated as a standalone requirement, while portions of the information required on the cover page would be combined with Item 1 of Part I of Form 1–A in the XML fillable form.

[290] The Commission would make the information available on EDGAR in a format that provides normal text for reading and XML-tagged data for analysis. With the exception of the items that focus issuers on eligibility to use Regulation A, much of the information called for in the XML-based fillable form is also required to be disclosed to investors in Part II of Form 1–A.

[291] Letter from Ernst & Young LLP, March 24, 2014 (''E&Y Letter'').

be listed in Part I if audited financial statements are not included.[292] With respect to Item 5 of Part I, another commenter supported the proposal's inclusion of checkboxes specifying the jurisdictions in which the securities are intended to be offered,[293] while a different commenter recommended expanding the list of jurisdictions so that issuers could indicate the Canadian provinces in which they intended to conduct their offerings.[294] With respect to Item 6 of Part I, one commenter recommended defining the term ''affiliated issuer.'' [295] This commenter recommended defining the term to refer to entities controlled by the issuer, noting that otherwise it may require disclosure by parent and sister entities, which is information unrelated to the capitalization of the issuer.

Other commenters recommended including additional disclosure in Part I. Two of these commenters recommended requiring issuers to include their Web site address and the jurisdiction of their principal place of business.[296] These commenters also objected to removing the disclosure and contact information for persons that are covered by the bad actor rules.[297]

(3) Final Rules

With the exception of technical clarifications, we are adopting provisions for Part I as proposed. The notification in Part I of Form 1–A will require disclosure in response to the following items:

- Item 1. (Issuer Information) will require information about the issuer's identity, industry, number of employees, financial statements and capital structure, as well as contact information.[298]
- Item 2. (Issuer Eligibility) will require the issuer to certify that it meets various issuer eligibility criteria.
- Item 3. (Application of Rule 262 (''bad actor'' disqualification and disclosure)) will require the issuer to certify that no disqualifying events have occurred and to indicate whether related disclosure will be included in the offering circular (*i.e.,* events that would have been disqualifying, but occurred before the effective date of the amendments to Regulation A).[299]
- Item 4. (Summary Information Regarding the Offering and other Current or Proposed Offerings) will include indicator boxes or buttons and text boxes eliciting information about the offering (including whether the issuer is conducting a Tier 1 or Tier 2 offering, amount and type of securities offered, proposed sales by selling securityholders and affiliates, type of offering, estimated aggregate sales of any concurrent offerings pursuant to Regulation A, anticipated fees in connection with the offering, and the names of audit and legal service providers, underwriters, and certain others providing services in connection with the offering).
- Item 5. (Jurisdictions in Which Securities are to be Offered) will include information about the jurisdiction(s) in which the securities will be offered.
- Item 6. (Unregistered Securities Issued or Sold Within One Year) will require disclosure about unregistered issuances or sales of securities within the last year, but will not include a requirement to provide the names and identities of the persons to whom unregistered securities were issued.

We are adopting, as proposed, further changes to Part I of Form 1–A. We are eliminating Item 1 (Significant Parties) of current Part I, which requires disclosure of the names, business address, and residential address of all the persons covered by current Rule 262. Instead, we are requiring only narrative disclosure in Part II of Form 1–A when the issuer has determined that a relevant party has a disclosable, but not disqualifying, ''bad actor'' event.[300] We also are eliminating Item 3 of current Part I relating to affiliate sales, because we are eliminating the current restrictions on affiliate resales under Rule 251(b).[301] Information about the amount of expected secondary sales and the existence of affiliate sales in the offering, however, will continue to be disclosed in Item 4. Item 6 (Other Present or Proposed Offerings) and Item 9 (Use of a Solicitation of Interest Document) of current Part I will be incorporated into Item 4 (Summary Information Regarding the Offering and Other Current or Proposed Offerings). We also are eliminating Item 7 (Marketing Arrangements) and Item 8 (Relationship with Issuer of Experts Named in Offering Statement) of current Part I, as disclosure of this information is required in Part II (Offering Circular).

Some of the technical changes from the proposed rules are non-substantive procedural revisions to the form that are needed to conform the form with the technical requirements of EDGAR, while the others will, as suggested by commenters, provide clarifications to the terms and requirements of Part I.

We do not, however, believe that the additional disclosure items suggested by some commenters,[302] such as the issuer's Web site address and the jurisdiction of the issuer's principal place of business, are necessary additional disclosures in Part I of Form 1–A. As proposed and adopted, Item 1 (Issuer Information) of Part I requires issuers to disclose the location of their principal executive offices, while Item 1 (Cover Page of Offering Circular) of Part II requires issuers to provide investors with their Web site address, if the issuer has a Web site. In light of these required disclosures, we do not believe that the additional suggested disclosure items for Part I are necessary or would provide investors with any additional relevant information about the issuer. Additionally, notwithstanding the view of some commenters,[303] we do not believe that the disclosure requirements for the application of Rule 262 (Disqualification Provisions) in Item 3 to Part I of Form 1–A need to include descriptions and addresses of persons that trigger disqualification for several reasons. An issuer that has a disqualified person involved in its offering will not be eligible to conduct a Regulation A offering, issuers will have to certify their compliance with Rule 262, and, with the exception of the addresses of covered persons, much of the requested disclosure, as it applies to persons that would have been disqualified but whose conduct occurred before effectiveness of the final rules or have received a waiver from disqualification,[304] will be required in Part II of the offering statement.[305]

[292] Letter from Cynthia M. Fornelli, Executive Director, Center for Audit Quality, March 24, 2014 (''CAQ Letter''); Letter from Deloitte & Touche LLP, March 24, 2014 (''Deloitte Letter''); E&Y Letter; Letter from PricewaterhouseCoopers LLP, March 24, 2014 (''PwC Letter'').

[293] NASAA Letter 2.

[294] Letter from Mike Liles, Jr., Attorney, Karr Tuttle Campbell, January 17, 2014 (''Karr Tuttle Letter'').

[295] Paul Hastings Letter.

[296] NASAA Letter 2; WDFI Letter. These commenters requested that this information be included in XBRL format, rather than XML. We note that XBRL is a form of XML, and generally requires labeling information with data ''tags'' rather than providing the information through fillable forms.

[297] NASAA Letter 2; WDFI Letter.

[298] Some of the information in Item 1, such as the name of the issuer, jurisdiction of incorporation, contact information, primary Standard Industrial Classification Code Number, and I.R.S. Employer Identification Number is already required to be included on the cover page of Form 1–A.

[299] *See* discussion of Rule 262(a)(3) and (a)(5) in Section II.G. below.

[300] *See* discussion in Section II.G. below.

[301] The primary purpose of Item 3 (Affiliate Sales) in Part I of Form 1–A (2014) is to ensure compliance with certain restrictions on affiliate resales under Rule 251(b). *See* discussion in Section II.B.3. above.

[302] NASAA Letter 2; WDFI Letter.

[303] *Id.*

[304] Rule 262(b)(1)–(2).

[305] *See* paragraph (a)(2) to Part II of Form 1–A. Additionally, underwriters, those receiving sales commissions and finders' fees, promoters, counsel,

Therefore, as proposed and adopted, the final rules for Part I of Form 1–A no longer require the disclosure of such information.

Consistent with a comment received,[306] we are making technical amendments to the financial statement requirements of Item 1 (Issuer Information) of Part I to clarify and require the use of certain industry-specific terminology and, wherever possible, to use terminology that is consistent with Regulation S–X and GAAP. These changes are designed to minimize potential confusion on the part of issuers in the banking and insurance industries that could result from the use of more general financial accounting terminology. We disagree, however, with the suggestion that we eliminate the financial statement section.[307] As we noted in the Proposing Release, the disclosure of this type of information will provide the Commission (and market participants) with more information about the Regulation A market as it develops to use as it considers potential changes to the regulation in the future. We also believe that the disclosure of this information will provide relevant and useful information about issuers and their offerings to investors and market participants that will help to facilitate informed investment decisions. We do not anticipate that the disclosure of financial information in response to Item 1 to Part I of Form 1–A will materially alter the compliance obligations of issuers given that the requirements draw from disclosure already required in the financial statements included in the offering circular. Additionally, we are revising Item 1 to require issuers to provide up to two email addresses to which the Commission's staff may send comment letters relating to an offering statement, rather than making this optional as proposed. The email addresses, however, will no longer be disseminated with the filings. We believe this change will result in faster reviews of offering statements by the Commission's staff.[308] Finally, consistent with the concerns underlying a comment we received, we recognize that the use of the term ''publicly traded'' in the outstanding securities table of Item 1 may be confusing in the context of a Regulation A offering.[309] Accordingly, we have revised Item 1 to only request the name of the trading center or quotation medium, if any, for outstanding securities.

Consistent with the views of several commenters,[310] we are clarifying that in the fee table included in Item 4 of Part I (Summary Information Regarding the Offering and Other Current or Proposed Offerings), auditor fees only need to be disclosed when the issuer is providing audited financial statements because, for example, an auditor might not be used for a Tier 1 offering.[311] This and similar items in the fee table could be left blank if not applicable and responses could be clarified in the text box following the table.

As suggested by one commenter,[312] we are expanding the list of jurisdictions in Item 5 (Jurisdiction in Which Securities are to be Offered) so that issuers can indicate the Canadian provinces in which they intend to conduct their offerings.[313]

Finally, in response to one comment,[314] we are clarifying, in this release, that the scope of the term ''affiliated issuer'' in proposed Item 6 of Part I is only meant to include affiliates of the issuer that are issuing securities in the same offering for which qualification is currently being sought under Regulation A. We believe this clarification is necessary in the final rules in order to avoid potential confusion among issuers as to the scope of the definition, in light of the broader definition of ''affiliate'' as it appears in Securities Act Rule 405.[315]

b. Part II (Offering Circular)

(1) Narrative Disclosure

(a) Proposed Rules for Narrative Disclosure

Part II (Offering Circular) in existing Form 1–A provides issuers with three options for their narrative disclosure: Model A, Model B, and Part I of Form S–1.[316] We proposed to eliminate the Model A question-and-answer format as a disclosure option, to update and retain Model B as a disclosure option (renaming it ''Offering Circular''), and to continue to permit issuers to rely on Part I of Form S–1 to satisfy the disclosure obligations of Part II of Form 1–A.[317]

We further proposed to create new requirements for audited financial statements and for a section containing management's discussion and analysis (MD&A) of the issuer's liquidity, capital resources, and results of operations.[318] As proposed, issuers that have not generated revenue from operations during each of the three fiscal years immediately before the filing of the offering statement would be required to describe their plan of operations for the 12 months following qualification of the offering statement, including a statement about whether, in the issuer's opinion, it will be necessary to raise additional funds within the next six months to implement the plan of operations.[319]

Consistent with the treatment of issuers in registered offerings, we further proposed to permit issuers to incorporate by reference into Part II of Form 1–A certain items previously submitted or filed on EDGAR, regardless of whether they were provided pursuant to Regulation A disclosure requirements. As proposed, incorporation by reference would be limited to documents publicly submitted or filed under Regulation A and issuers would have to be subject to the ongoing reporting obligations for Tier 2 offerings.[320] Issuers would be required to describe the information incorporated by reference, and include a separate hyperlink to the relevant document on EDGAR, which need not remain active after the filing of the related offering statement.

(b) Comments on Proposed Rules

Several commenters recommended against the proposed elimination of the Model A disclosure format, and instead recommended that the Commission retain an updated version of the

executive officers, directors, and significant securityholders, among others, must be identified in the offering statement in most instances. *See, e.g.,* Item 4 of Part I and Items 1, 10, and 11 of the Offering Circular, Part II of Form 1–A.

[306] E&Y Letter.

[307] *Id.*

[308] In the review of registered offerings the Commission's staff will call filers to obtain email addresses so as to issue comment letters electronically. Depending on the responsiveness of the filer, this can be a time consuming process.

[309] *See* E&Y Letter.

[310] *See* fn. 292 above.

[311] Disclosure is only required in the fee table to the extent applicable fees were incurred by the issuer in connection with the offering.

[312] Karr Tuttle Letter.

[313] Item 5 of Part I of proposed Form 1–A did not include Canadian provinces, despite Canadian issuers being eligible issuers. Item 5, as adopted, corrects the form for Canadian issuers or for offerings that contemplate offers or sales in Canada.

[314] Paul Hastings Letter.

[315] Rule 405 defines ''affiliate'' to include, among other things, persons controlling the issuer or under common control with the issuer. 17 CFR 230.405.

[316] Non-corporate issuers are not permitted to use Model A.

[317] *See* Proposing Release, at Section II.C.3.

[318] *See* Proposing Release, at Section II.C.3(b)(1).

[319] *See* Item 9(c) of Offering Circular, Part II of proposed Form 1–A.

[320] Issuers following the Offering Circular disclosure model would be permitted to incorporate by reference Items 2 through 14, whereas issuers following the narrative disclosure in Part I of Form S–1 would be permitted to incorporate by reference Items 3 through 11 (other than Item 11(e)) of Part I of Form S–1. *See* General Instruction III to proposed Form 1–A. As with Model B, the item numbers in the Offering Circular format of proposed Part II of Form 1–A and Part I of Form S–1 do not align.

format.[321] Two of these commenters recommended including a Model A disclosure format that reflects the most recent version of NASAA's Form U–7.[322] One commenter recommended retaining existing Form 1–A with minor changes until such time as the Commission and NASAA could develop an improved form.[323] Six commenters, however, suggested that the Commission eliminate Model A and the proposed Offering Circular disclosure formats and instead recommended requiring disclosure by reference to Regulation S–K (with reduced disclosure requirements in some instances).[324] These commenters believed that such a change would increase efficiency and comparability. One of these commenters was concerned that differences between Items 303 and 402 of Regulation S–K and the comparable disclosure requirements of the Offering Circular format might cause confusion.[325] Two commenters recommended requiring REITs to incorporate certain of the items contained in Industry Guide 5 and Form S–11.[326]

Several commenters had specific recommendations on disclosure requirements. Four commenters recommended that the Commission find a way to require more concise risk factor disclosure.[327] One of these commenters recommended possibly imposing a limit on the number of risk factors or guidance to avoid repetition and emphasizing that disclosure should not be repeated throughout the offering circular.[328] Two commenters recommended expanding the dilution disclosure requirement in the Offering Circular format's Item 4.[329] As proposed, Item 4 only requires disclosure of any material disparity between the public offering price and the effective cash cost to insiders over the past year. These commenters recommended removing the one year restriction. One commenter recommended focusing the disclosure requirements in the offering statement on valuation assessments and a discussion of management's expectations about the company's future performance, including projections.[330] Another commenter recommended requiring disclosure of the names of ''those holding more than 20% of shares'' and a description of the ownership and capital structure, including descriptions of how the exercise of rights by principal shareowners could negatively affect the purchasers of shares being offered.[331] Two commenters recommended reducing and clarifying the disclosure obligations for executive compensation and management's discussion and analysis for smaller offerings.[332] One commenter recommended requiring disclosure regarding the existence of a code of ethics and corporate governance principles in a manner that would encourage issuers to adopt internal controls.[333]

(c) Final Rules for Narrative Disclosure

With the exception of clarifying changes, certain additional scaled disclosure items applicable to Tier 1 offerings, and additional guidance to issuers designed to streamline disclosure, we are adopting final rules for narrative disclosure in Form 1–A substantially as proposed. As adopted, Offering Circular disclosure in Part II of Form 1–A will cover:[334]

- Basic information about the issuer and the offering, including identification of any underwriters and disclosure of any underwriting discounts and commissions (Item 1: Cover Page of Offering Circular);
- Table of Contents (Item 2);
- The most significant factors that make the offering speculative or substantially risky (Item 3: Summary and Risk Factors);
- Material disparities between the public offering price and the effective cash costs for shares acquired by insiders during the past year (Item 4: Dilution);
- Plan of distribution for the offering and disclosure regarding selling securityholders (Item 5: Plan of Distribution and Selling Securityholders);
- Use of proceeds (Item 6: Use of Proceeds to Issuer);
- Business operations of the issuer for the prior three fiscal years (or, if in existence for less than three years, since inception) (Item 7: Description of Business);
- Material physical properties (Item 8: Description of Property);
- Discussion and analysis of the issuer's liquidity and capital resources and results of operations through the eyes of management covering the two most recently completed fiscal years and interim periods, if required; and, for issuers that have not received revenue from operations during each of the three fiscal years immediately before the filing of the offering statement (or since inception, whichever is shorter), the plan of operations for the 12 months following qualification of the offering statement, including a statement about whether the issuer anticipates that it will be necessary to raise additional funds within the next six months (Item 9: Management's Discussion and Analysis of Financial Condition and Results of Operations);
- Identification of directors, executive officers and significant employees with a discussion of any family relationships within that group, business experience during the past five years, and involvement in certain legal proceedings during the past five years (Item 10: Directors, Executive Officers and Significant Employees);
- Group-level executive compensation disclosure for the most recent fiscal year for the three highest paid executive officers or directors with Tier 2 requiring individual disclosure of the three highest paid executive officers or directors (Item 11: Compensation of Directors and Executive Officers);
- Beneficial ownership of voting securities by executive officers, directors, and 10% owners (Item 12: Security Ownership of Management and Certain Securityholders);
- Transactions with related persons, promoters and certain control persons (Item 13: Interest of Management and Others in Certain Transactions);
- The material terms of the securities being offered (Item 14: Securities Being Offered); and
- Any events that would have triggered disqualification of the offering under Rule 262 if the issuer could not

[321] BIO Letter; Karr Tuttle Letter; NASAA Letter 2; Verrill Dana Letter 1; WDFI Letter.

[322] Karr Tuttle Letter; Verrill Dana Letter 1.

[323] NASAA Letter 2.

[324] Canaccord Letter; CFIRA Letter 1; E&Y Letter; Ladd Letter 2 (recommending the change only to the extent that the Commission believed it would increase the speed of staff reviews); McCarter & English Letter; WR Hambrecht + Co Letter.

[325] E&Y Letter.

[326] ABA BLS Letter; MoFo Letter.

[327] CFIRA Letter 1; MoFo Letter; SVB Financial Letter; WR Hambrecht + Co Letter.

[328] WR Hambrecht + Co Letter.

[329] NASAA Letter 2; WDFI Letter.

[330] WR Hambrecht + Co Letter (indicating that, absent this requirement, such information would be shared orally by management or research analysts with only the biggest investors).

[331] CFA Institute Letter.

[332] Letter from Rutheford B. Campbell, Jr., Spears-Gilbert Professor of Law, University of Kentucky, March 5, 2014 (''Campbell Letter''); MoFo Letter (recommending that the Commission reduce and clarify the disclosure obligations for executive compensation and management's discussion and analysis by eliminating the need to repeat information already required to be included in the financial statements, reducing the number of years of business experience disclosure required to be included and clarifying the instructions of the executive compensation section).

[333] Ladd Letter 2 (referring to PCAOB AU 325 and 9325).

[334] Financial statements disclosure requirements for Part F/S of Form 1–A are discussed in Section II.C.3.b(2)(c). below.

rely on the provisions in Rule 262(b)(1).[335]

The final rules eliminate Model A as a disclosure format for Regulation A offerings, as proposed. While some commenters suggested that the Commission should preserve Model A as an additional disclosure format for Part II of Form 1–A or update existing Model A with NASAA's more recent Form U–7, we are not persuaded that a question-and-answer format should be retained in the final rules. As we noted in the Proposing Release, the Model A disclosure format has historically been used less frequently, and resulted in less-uniform disclosure and a longer time to qualification than the Model B disclosure format.[336] We do not believe that the use of Form U–7, which is largely similar to Model A and is also in a question-and-answer format, will alter this result. While the question-and-answer disclosure format does provide issuers with additional flexibility, we believe that the Offering Circular disclosure format (formerly called Model B) and Part I of Forms S–1 or S–11 provide issuers with sufficient flexibility in choosing their disclosure format without any of the potential delays or uniform disclosure issues associated with Model A, either currently or even if it is updated with Form U–7. We are further concerned that a question-and-answer format may not best serve the interests of investors in Regulation A offerings by providing them with less-uniform disclosure in a potentially unfamiliar format. Additionally, we are concerned that a question-and-answer format may incorrectly lead issuers to believe that, despite the guidance contained in the form itself, less complete disclosure is required under this format, thereby causing unnecessary delays in the qualification process. Lastly, and particularly with respect to Tier 2 offerings, we do not believe that a question-and-answer format is appropriate for issuers and investors in larger-sized offerings that generally benefit from disclosure that is comparable between offerings in format and information disclosed. For similar reasons, we do not believe that this format is appropriate in offerings of any size by issuers that seek to foster potential trading in the secondary markets.[337]

As proposed, the final rules will require issuers to provide disclosure in Part II of Form 1–A that follows the Offering Circular or Part I of Form S–1 disclosure format. Additionally, we agree with commenters that certain additional disclosure requirements may be appropriate for offerings by REITs and similar issuers. The final rules, therefore, also permit issuers to follow, in addition to the Offering Circular and Part I of Form S–1 formats, the form disclosure requirements of Part I of Form S–11.[338] An issuer may, however, only use Part I of Form S–11 if the securities are eligible to be registered on that form. As proposed and adopted with respect to disclosure under Part I of Form S–1, issuers following Part I of Form S–11 may follow smaller reporting company narrative disclosure requirements if they meet the definition of that term in Securities Act Rule 405.[339]

Contrary to the suggestions of some commenters, we are not adopting rules that would limit the number of risk factors disclosed. While we appreciate the concern that certain issuers and their advisors may take an overly cautious approach to the application of our disclosure requirements resulting in numerous risk disclosures, the decision as to the appropriate mix of information that should be disclosed to investors must be based on the particular facts and circumstances of each company. We do not believe that a limit on risk factor disclosure is an appropriate substitute for the judgments of issuers and their advisors. A form-based limitation on the number of risk factors, beyond the guidance in Item 3 of Part II, could lead to incomplete disclosure that may place investors at a higher risk of potential loss and issuers at a higher risk for potential litigation if it results in appropriate risk factors being excluded.

Further, we believe that certain other commenter concerns and suggestions as to specific narrative disclosures are already appropriately addressed by the final rules. For example, one commenter suggested that we require disclosure of the names of those holding more than 20% beneficial ownership of the issuer and a description of the issuer's ownership and capital structure, including descriptions of the exercise of rights of principal shareholders.[340] The final rules substantially address these topics. Item 12 of the Offering Circular, as proposed and adopted, requires disclosure relating to more than 10% beneficial ownership and Item 14, which is adopted as proposed, requires disclosure of the terms of all classes of outstanding capital stock.

As adopted, the Offering Circular includes disclosure based on disclosure guidelines set forth in the Securities Act Industry Guides as well as guidance applicable to limited partnerships and limited liability companies.[341] As suggested by commenters,[342] in order to create more flexibility in disclosure matters for smaller issuers, we are adding a materiality threshold for disclosure as it relates to time and dollar expenditures on research and development.[343] Additionally, the final rules require issuers to provide financial statements, which in the case of Tier 2 offerings must be audited,[344] as well as a section on management's discussion and analysis (MD&A) of the issuer's liquidity, capital resources, and results of operations.[345] We are amending the MD&A disclosure requirements in Item 9 to align more closely with the language in Regulation S–K that applies to domestic registrants [346] and smaller reporting companies.[347] Consistency with Regulation S–K in this regard may assist companies with compliance with the rules for registered offerings to the extent Tier 2 issuers eventually become Exchange Act reporting companies, while also making sure that Regulation A issuers do not have a greater disclosure obligation than registered

[335] *See* discussion of the final disqualification provisions in Section II.G. below. The final rules require issuers to provide this ''bad actor'' disclosure even if it elects to follow the Part I of Form S–1 disclosure format.

[336] *See* Proposing Release, at Section II.C.3.

[337] *See* Section II.E. below for a discussion of the final rules for ongoing reporting.

[338] As proposed, issuers must choose one format to follow for the offering circular and may not combine items from different formats. *See* General Instruction II to proposed and final Form 1–A. In order to avoid confusion and to facilitate the review of offering circulars by investors and the Commission's staff, the final rules will also require issuers to indicate on the offering circular cover page which format they are following. *See* Part II(a)(1) of Form 1–A.

[339] 17 CFR 230.405.

[340] CFA Institute Letter.

[341] *See* Item 7(c)–(d) of Offering Circular, Part II of Form 1–A ; *see also* Rel. No. 33–6900 (June 17, 1991) [56 FR 28979] (setting forth the Commission's view on the disclosure requirements for limited partnerships).

[342] CFIRA Letter 1; MoFo Letter; WR Hambrecht + Co Letter.

[343] Item 7(a)(1)(iii) of Offering Circular, Part II of Form 1–A.

[344] *See* discussion in Section II.C.3.b(2)(c). below.

[345] *See* Item 9 of Offering Circular, Part II of Form 1–A.

[346] Item 9(b)(1) of Offering Circular, Part II of proposed Form 1–A is amended to track more closely the language and requirements of domestic issuers, as opposed to foreign private issuers. As proposed, the language more closely followed the requirements contained in Form 20–F for foreign private issuers.

[347] We are eliminating proposed Item 9(b)(2)–(3) of Offering Circular, Part II of Form 1–A. As proposed, these disclosures would have increased the disclosure obligations of Regulation A issuers in comparison to those required of smaller reporting companies under Item 305 of Regulation S–K. 17 CFR 229.305.

domestic issuers.[348] Further, consistent with the proposed rules, issuers that have not generated revenue from operations during each of the three fiscal years immediately before the filing of the offering statement (or since inception, whichever is shorter) will be required to describe their plan of operations for the 12 months following qualification of the offering statement.[349] For companies that have been in existence for less than three years, the final rules clarify that this disclosure requirement applies to them since inception.[350]

The changes to the Offering Circular format adopted today will result in Offering Circular disclosure, particularly for Tier 2 offerings, more akin to what is required of smaller reporting companies in a prospectus for a registered offering. For example, the final rules require issuers in both Tier 1 and Tier 2 offerings to disclose beneficial ownership of their voting securities, as opposed to record ownership of voting and non-voting securities.[351] With respect to transactions with related persons, promoters, and certain control persons in Tier 2 offerings, issuers will no longer be required to disclose transactions in excess of $50,000 in the prior two years (or similar transactions currently contemplated), but rather must follow the requirements for smaller reporting company disclosure of transactions during the prior two fiscal years that exceed the lesser of $120,000 or 1% of the average total assets at year end for the last two completed fiscal years.[352] We originally proposed to apply this threshold to Tier 1 offerings also, but believe that the 1% of average total assets threshold could result in a lower disclosure threshold for smaller issuers than was otherwise required of such issuers under the existing rules. The final rules therefore preserve the related party transaction disclosure requirements of Regulation A, as they existed before the adoption of final rules today, for Tier 1 offerings so that issuers in such offerings are only required to disclose such transactions in excess of $50,000 in the prior two years (or similar transactions currently contemplated).[353]

In addition to preserving the related party transaction disclosure threshold for Tier 1 offerings, we are adopting a change applicable to Tier 1 that will provide an additional scaled disclosure option for issuers in the Offering Circular. This change is consistent with the general views of a number of commenters that urged the Commission to consider additional potential scaling for smaller issuers generally and Tier 1 offerings in particular.[354] The final rules alter the format of, but not the ultimate aggregate amount of information required to be disclosed in, the proposed executive compensation disclosure requirements for Tier 1 offerings. Instead of providing executive compensation data on an individual basis for the three highest paid officers or directors and on a group basis for all directors, as was proposed for both Tier 1 and Tier 2, issuers in Tier 1 offerings will instead be required to disclose only group-level compensation data as it applies to the three highest paid executives or directors and all directors as a collective group, including the number of persons comprising such group, covering the period of the issuer's last completed fiscal year.[355] In this regard, the final rules for Tier 1 offerings will continue to require the disclosure of important compensation data to investors, but on an aggregate, rather than individual, basis. The group-level disclosure format for the highest paid executives and all directors should help smaller issuers avoid some of the harm that could follow compensation disclosure of individual executives or directors to the market and competitors, especially when disclosure of such information would not necessarily be required in the context of a private placement or other exempt offering.[356] Further, the additional requirement to disclose the total number of persons comprising any group for which group-level data is required to be disclosed will preserve the ability of investors in Tier 1 offerings to determine the average compensation paid to all persons within the group.[357] Consistent with the suggestions of some commenters,[358] we believe that this change to the final rules will assist smaller issuers with more appropriately tailored executive compensation disclosure requirements and will provide investors with useful information.

We do not, however, believe that further scaling of smaller issuers' MD&A is necessary under the final rules. As we noted in the Proposing Release, while the final rules provide issuers with more detailed instructions on MD&A disclosure, similar disclosure is already called for under existing requirements.[359] The final MD&A requirements clarify existing requirements and will likely save issuers time by providing more express guidance regarding the type of information and analysis that should be included. We believe the clearer requirements will lead to improved MD&A disclosure, which will provide investors with better visibility into management's perspective on the issuer's financial condition and operations. The final provisions for MD&A disclosure in the Offering Circular, however, are not as extensive as those required under Item 303 of Regulation S–K.[360] As proposed, the final Offering Circular format includes detailed guidance and requirements similar to Item 303 with respect to liquidity, capital resources, and results of operations, including the most significant trend information,[361] but does not separately call for disclosure of off-balance sheet arrangements or a table of contractual obligations.[362] Similar to

[348] *See also* discussion of the final rules for simplifying Exchange Act registration of Tier 2 issuers in Section II.E.3.c. below.

[349] Item 9(c) of Offering Circular, Part II of Form 1–A.

[350] *Id.*

[351] Item 12 of Offering Circular, Part II of Form 1–A.

[352] Item 13 of Offering Circular, Part II of Form 1–A. As adopted, Tier 2 issuers that have more than $5 million in average total assets at year end for the last two completed fiscal years would be required to disclose related party transactions at a higher threshold (*i.e.,* 1% or more) than was previously required under Regulation A, which required the disclosure of transactions in excess of $50,000 in the prior two years.

[353] *Id.*

[354] *See, e.g.,* Campbell Letter; MoFo Letter.

[355] *See* Item 11 of Offering Circular, Part II of Form 1–A. The number of persons comprising the director-level group data is also required of issuers providing compensation data under Tier 2.

[356] For example, there are no rule-based disclosure requirements for private placements pursuant to Rule 506 of Regulation D, 17 CFR 230.500 *et seq.,* when the issuer only sells to accredited investors. Contrary to the requirements of Regulation D, we believe mandated compensation (and other) disclosure is appropriate in the context of a public offering under Regulation A. Additionally, however, we believe that the final disclosure rules for such information are appropriately tailored to provide information to investors.

[357] This requirement is a change to the disclosure requirements of group-level data in both Tiers. Although this information would have been ascertainable under Tier 2 by comparing the group-level disclosure of director compensation to the number of directors disclosed pursuant to Item 10 of the Offering Circular, we believe the change will facilitate investors' calculations of average director compensation without significantly increasing the burden on Tier 2 issuers.

[358] Campbell Letter; MoFo Letter.

[359] MD&A disclosure is specifically required by Model A. Model B calls for similar information in Item 6, which requires disclosure of the characteristics of the issuer's operations or industry that may have a material impact upon the issuer's future financial performance. Item 6 also requires disclosure of the issuer's plan of operations and short-term liquidity if the issuer has not received revenue from operations during each of the three fiscal years immediately prior to filing the offering statement.

[360] 17 CFR 229.303.

[361] 17 CFR 303(a)(1)–(3). *Cf.* Form 20–F, at Item 5.

[362] An issuer may, however, be required to disclose such information during the course of the

smaller reporting companies in registered offerings, Regulation A issuers are required to disclose information about the issuer's results of operations for the two most recently completed fiscal years and interim periods, when applicable.[363]

Except as noted above, the updates to the Offering Circular disclosure requirements will not result in an overall increase in an issuer's disclosure obligations. For example, as mentioned above, certain issuers will have a higher threshold for reporting related party transactions than would have previously been required under Regulation A. Additionally, Tier 1 issuers (which will likely be smaller companies) will, in comparison to the proposed rules, benefit from further scaling of related party transactions and compensation-related disclosures. Further, as proposed, all issuers will be permitted to provide more streamlined disclosure of dilutive transactions with insiders by no longer being required to present a dilution table based on the net tangible book value per share of the issuer's securities.[364] While we disagree with commenters that suggested we should expand disclosure provisions related to dilution,[365] the final rules, which reduce the disclosure time period from three years to one year, are consistent with their view that the disclosure of this information should not depend on when such shares were acquired. We do not believe that information regarding dilution covering more than the prior year is necessary for the smaller issuers likely to conduct Regulation A offerings, nor do we believe that a reduction in the required disclosure from three years to one year, as proposed and adopted, will negatively affect investor protection. Additionally, the final provisions for MD&A disclosure clarify existing requirements and should benefit issuers by providing more express guidance regarding the type of information and analysis that should be included, including instructions about disclosure of operating results. We believe that these clarifications should also lead to improved MD&A disclosure, which will provide investors with better visibility into management's perspective on the issuer's financial condition and results of operations. Investors, particularly in Tier 2 offerings, will also benefit from disclosure that is more consistent across issuers in both registered offerings and Regulation A offerings.

We are making one change to the disclosure requirements of Item 6 (Use of Proceeds) in the final rules. As proposed, issuers were required to disclose if any material amount of other funds are to be used in conjunction with the proceeds raised in the offering. If so, an issuer would be required to state the amounts and sources of such other funds. The final rules include these proposed provisions, but add a requirement that the issuer further provide disclosure about whether such other funds are firm or contingent. While we did not receive any comment specifically addressing this issue, where applicable, this type of information would generally be required to be disclosed as part of the staff review and comment process before qualification. We believe an express requirement in the final rules will ultimately save issuers time in the qualification process and therefore are including language addressing this issue in the final rules.[366]

For clarity, we are moving the requirements to furnish certain supplemental information found in Item 7 (Business Description) of Part II to Form 1–A to General Instruction IV (Supplemental Information) to Form 1–A, where similar requirements are found. We believe that providing these instructions in one place will help issuers understand and comply with the process for furnishing supplemental information to the Commission. The process for furnishing supplemental information to the Commission pursuant to Form 1–A is similar to the treatment of such information in registered offerings.[367] Additionally, since we believe it is important for the Commission to be aware of the existence—rather than the non-existence—of such reports, the final rules no longer require an issuer to inform the Commission if no such report has been prepared. Item 7 is further revised to clarify that issuers must only disclose distinctive or special characteristics of the issuer's operation or industry that are reasonably likely to have a material impact on its future financial performance.[368]

The final rules also clarify in Item 5 (Plan of Distribution and Selling Securityholders) the calculation of selling securityholder ownership prior to an offering, which we believe will facilitate compliance with, and calculations pursuant to, this requirement. Additionally, in order to avoid potential confusion as to the scope of Items 11 and 13 to Part II of Form 1–A, the final rules make clear that issuers are required to provide disclosure for ''executive officers'' rather than ''officers.'' [369] Contrary to the suggestion of one commenter,[370] we do not believe that requiring disclosure regarding the existence of a code of ethics and corporate governance principles should be a required disclosure item for the types of issuers likely to conduct Regulation A offerings. While nothing in Part II of Form 1–A would prevent an issuer from providing more disclosure than is otherwise required in the form itself, we do not believe it would be appropriate to mandate this type of disclosure for all issuers because we anticipate that issuers of Regulation A securities will generally be smaller companies with less complex organizational structures.[371] We further believe that the disclosure requirements of Part II of Form 1–A will provide investors with the information they need to adequately evaluate an issuer's business and securities.

As proposed, the final rules permit issuers to incorporate by reference into Part II of Form 1–A certain items previously submitted or filed on EDGAR. In a change from the proposed rules, issuers will be permitted to incorporate by reference any documents publicly submitted or filed on EDGAR, as opposed to being limited to documents submitted or filed pursuant to Regulation A. We believe that this

qualification process, if material to an understanding of the issuer's financial condition.

[363] When management's discussion and analysis of the financial condition and results of operations is provided for interim period financial statements, any material change in financial condition from the end of the preceding fiscal year to the date of the most recent interim balance sheet should be discussed. Also, any material changes in results of operations with respect to the most recent fiscal year-to-date period for which an income statement is provided and the corresponding year-to-date period of the preceding fiscal year shall be discussed. *See* Instruction 3 to Item 9(a) of the Offering Circular, Part II of Form 1–A.

[364] *See* Item 4 (Dilution) of the Offering Circular, Part II of Form 1–A.

[365] *See* NASAA Letter 2, at fn. 50; WDFI Letter, at 9.

[366] *See* Instruction 5 to Item 6 (Use of Proceeds) of Part II of Form 1–A.

[367] In this regard, we have also clarified in General Instruction IV that supplemental information provided to the Commission may be returned in certain circumstances and will be handled by the Commission in a similar manner to supplemental information provided in connection with registered offerings.

[368] The language in proposed Item 7 to Part II of Form 1–A indicated that issuers had to disclose characteristics that ''may'' have a material impact on its future financial performance. We believe this clarifying change in the final rules will help facilitate compliance by smaller issuers.

[369] The language in proposed Items 11 and 13 to Part II of Form 1–A indicated that issuers had to disclose information regarding directors and officers. We believe the clarifying language will help smaller issuers comply with the final rules.

[370] Ladd Letter 2 (referring to PCAOB AU 325 and 9325).

[371] *See* fn. 93 above and Section III.C.3. below.

change will continue to facilitate the provision of required information to investors, while taking a consistent approach to information previously provided to the Commission and publicly available on EDGAR. Issuers following the Offering Circular disclosure model will be permitted to incorporate by reference into Items 2 through 14; issuers following the narrative disclosure in Part I of Form S–1 will be permitted to incorporate by reference into Items 3 through 11 (other than Item 11(e)) of Part I of Form S–1; issuers following the narrative disclosure in Part I of Form S–11 will be permitted to incorporate by reference into Items 3 through 26, Item 28, and Item 30 of Part I of Form S–11.[372] The final rules require issuers to describe the information incorporated by reference, and include a separate hyperlink to the relevant document on EDGAR, which need not remain active after the filing of the related offering statement. Additionally, Form 1–A encourages issuers to cross-reference items within the form, where applicable.[373] Further, in order to avoid incorporation by reference to stale information without requiring the latest version of the document to be filed, Form 1–A indicates that, if any substantive modification has occurred in the text of any document incorporated by reference since such document was filed, the issuer must file with the reference a statement containing the text and date of such modification.[374]

(2) Financial Statements

(a) Proposed Rules for Financial Statements

Part F/S of Form 1–A currently requires issuers [375] in Regulation A offerings to provide the following financial statements prepared in accordance with U.S. GAAP: [376]

- A balance sheet as of a date within 90 days before filing the offering statement (or as of an earlier date, not more than six months before filing, if the Commission approves upon a showing of good cause) but, for filings made more than 90 days after the end of the issuer's most recent fiscal year, the balance sheet must be dated as of the end of the fiscal year;
- statements of income, cash flows, and stockholders' equity for each of the two fiscal years preceding the date of the most recent balance sheet, and for any interim period between the end of the most recent fiscal year and the date of the most recent balance sheet;
- financial statements of significant acquired or to be acquired businesses; and
- pro forma information relating to significant business combinations.

The required financial statements may be unaudited unless the issuer has already obtained an audit for another purpose.[377]

We proposed to generally maintain the existing financial statement requirements of current Part F/S of Form 1–A for Tier 1 offerings, while requiring Tier 2 issuers to file audited financial statements.[378] We proposed to require all issuers to file balance sheets as of the two most recently completed fiscal year ends (or for such shorter time that they have been in existence), instead of the current requirement to file a balance sheet as of only the most recently completed fiscal year end. As proposed, financial statements for U.S.-domiciled issuers would be required to be prepared in accordance with U.S. GAAP. Additionally, however, we proposed to permit Canadian issuers to prepare financial statements in accordance with either U.S. GAAP or International Financial Reporting Standards (IFRS) as issued by the International Accounting Standards Board (IASB).[379]

As proposed, issuers conducting Tier 1 offerings would be required to follow the requirements for the form and content of their financial statements set out in Part F/S, rather than the requirements in Regulation S–X. In certain less common circumstances, however, such as for an acquired business or subsidiary guarantors, Part F/S would direct issuers conducting Tier 1 offerings to comply with certain portions of Regulation S–X, which provides guidance on the financial statements required for entities other than the issuer.[380]

For all Tier 2 offerings, the proposed rules would require issuers to follow the financial statement requirements of Article 8 of Regulation S–X, as if the issuer conducting a Tier 2 offering were a smaller reporting company, unless otherwise noted in Part F/S. This requirement would include any financial information with respect to acquired businesses required by Rule 8–04 and 8–05 of Regulation S–X.[381]

As proposed, issuers conducting Tier 2 offerings would be required to have their financial statements audited. As with Tier 1 offerings, the auditor of financial statements would need to be independent under Rule 2–01 of Regulation S–X and must comply with the other requirements of Article 2 of Regulation S–X, but need not be PCAOB-registered.[382] Unlike Tier 1

[372] *See* General Instruction III to Form 1–A. Since, as proposed, the financial statements required by Part F/S would apply to those following the Form S–1 format, rather than Item 11(e), we have removed the reference to that item in General Instruction III for clarity. Although, as proposed, Items 11(f) and (g) are also not required for those following the Form S–1 format, we continue to specifically allow for cross-referencing and incorporation by reference in those items for those voluntarily choosing to provide such disclosure. As with Model B, the item numbers in the Offering Circular format of Part II of Form 1–A and Part I of Form S–1 do not align.

[373] *Id.* Issuers may, for example, add a cross-reference to disclosure found in the financial statements. However, they may not incorporate by reference or add a cross-reference within the financial statements to disclosures found elsewhere. *See* General Instruction III to Form 1–A, which does not allow for incorporation by reference in Part F/S.

[374] *Cf.* Securities Act Rule 411(c) and Exchange Act Rule 12b–32 (providing a similar requirement when incorporating exhibits by reference in filings under the Securities Act and Exchange Act).

[375] The requirements also apply to the issuer's predecessors or any business to which the issuer is a successor.

[376] *See* Form 1–A, Part F/S (2014).

[377] The issuer would be considered to have audited financial statements if the qualifications and reports of the auditor meet the requirements of Article 2 of Regulation S–X (17 CFR 210.1 *et seq.*) and the audit was conducted in accordance with U.S. GAAS or the standards of the PCAOB. The auditor is not required to be registered with the PCAOB.

[378] *See* paragraph (c) of Part F/S of proposed Form 1–A.

[379] If the proposed financial statements comply with IFRS as issued by the IASB, such compliance must be unreservedly and explicitly stated in the notes to the financial statements and the auditor's report must include an opinion on whether the financial statements comply with IFRS as issued by the IASB. *See* General Rule (a)(2) to Part F/S of proposed Form 1–A. *Cf.* Item 17(c) of Form 20–F.

[380] We proposed to update the requirements for financial statements of businesses acquired or to be acquired in Part F/S to refer to the requirements of Rule 8–04 of Regulation S–X. We also proposed to provide specific references to the relevant provisions of Regulation S–X regarding the requirements for financial statements of guarantors and the issuers of guaranteed securities (Rule 3–10 of Regulation S–X), financial statements of affiliates whose securities collateralize an issuance of securities (Rule 3–16 of Regulation S–X), and financial statements provided in connection with oil and gas producing activities (Rule 4–10 of Regulation S–X). As proposed, the financial statements provided in these circumstances would only be required to be audited to the extent the issuer had already obtained an audit of its financial statements for other purposes.

[381] Tier 2 issuers would, however, follow paragraph (a)(3) of Part F/S of proposed Form 1–A with respect to the age of the financial statements and the periods to be presented. In Tier 2 offerings, the form and contents of financial statements for other entities follow the requirements of Article 8 of Regulation S–X.

[382] *See* Part F/S of proposed Form 1–A (referencing Article 2 of Regulation S–X, 17 CFR 210.2–01 *et seq.*).

issuers, issuers conducting Tier 2 offerings would be required to provide financial statements that are audited in accordance with the standards issued by the PCAOB.

Additionally, we proposed to update the Form 1–A financial statement requirements to be consistent with the proposed timetable for ongoing reporting.[383] Under existing Regulation A, issuers are required to prepare a balance sheet as of a date not more than 90 days before filing the offering statement, or not more than six months before filing if approved by the Commission upon a showing of good cause.[384] In practice, issuers often receive a six-month accommodation. If the financial statements are filed more than 90 days after the end of the issuer's most recently completed fiscal year, the financial statements must include that fiscal year.[385]

We proposed to extend the permissible age of financial statements in Form 1–A to nine months, in order to permit the provision of financial statements that are updated on a timetable consistent with our proposed requirement for semiannual interim reporting.[386] We also proposed to add a new limitation on the age of financial statements at qualification, under which an offering statement could not be qualified if the date of the balance sheet included under Part F/S were more than nine months before the date of qualification.[387] For filings made more than three months after the end of the issuer's most recent fiscal year, the balance sheet would be required to be dated as of the end of the most recent fiscal year.[388] For filings made more than nine months after the end of the issuer's most recent fiscal year, the balance sheet would be required to be dated no earlier than as of six months after the end of the most recent fiscal year.[389] If interim financial statements are required, they would be required to cover a period of at least six months.[390] In the Proposing Release, we noted that requiring issuers to file interim financial statements no older than nine months and covering a minimum of six months would have the beneficial effect of eliminating what could otherwise be a requirement for certain issuers to provide quarterly interim financial statements during the qualification process and would be consistent with the timing of our proposed ongoing reporting requirements.[391] We proposed to generally maintain the timing requirement of existing Form 1–A concerning the date after which an issuer must provide financial statements dated as of the most recently completed fiscal year, but to change the interval from 90 calendar days to three months.[392] While not proposed, we additionally solicited comment on whether Tier 2 issuers should be required to submit financial statements in interactive data format using the eXtensible Business Reporting Language (XBRL).

(b) Comments on Proposed Rules

We received numerous detailed suggestions from commenters on our proposed financial statement requirements for Part F/S of Form 1–A. Commenters were generally supportive of the proposed rules, but also raised concerns as to the effect some of the proposed requirements for audits in Tier 2 offerings could have on issuers and recommended clarifying revisions that would help to make the financial statements more consistent in some respects with those required in registered offerings, while also eliminating potentially confusing or inconsistent terminology.

Commenters generally supported the proposed increase to two years of balance sheets.[393] One commenter noted that the Commission's proposal to require two years of balance sheets was appropriate, particularly in light of the existing requirement to provide statements of income, cash flows and stockholders' equity for two years.[394] Another commenter, however, argued against two years of balance sheets for Tier 1 issuers instead of the one year required under existing Regulation A.[395]

While commenters generally approved of the proposed rules not requiring audits for Tier 1 issuers,[396] many recommended making changes to the proposed auditing requirements for the financial statements included in an offering.[397] One commenter recommended not requiring audited financial statements until after the first year of operations as a ''public startup company'' or not at all for companies that are pre-revenue or that have paid-in capital, assets and revenues below a specified threshold.[398] Many commenters recommended allowing Tier 1 issuers to designate financial statements as ''audited'' if the auditor was only independent in accordance with the rules of the AICPA and not in accordance with the Commission's auditor independence rules.[399] These commenters noted that the proposed requirements for financial statements only to qualify as ''audited'' if the auditor complies with the independence standards of Article 2 of Regulation S–X, as opposed to the independence standards of the AICPA, may increase costs to smaller issuers due to the increased likelihood that an issuer would need to have their financial statements audited a second time by an auditor who was independent under Rule 2–01 of Regulation S–X. One commenter requested clarification of whether a Tier 1 issuer could voluntarily provide an audit opinion on its financial statements that was obtained for other purposes if the auditor complied with U.S. GAAS, including AICPA independence standards, but not with the Commission's independence rules.[400] Several commenters recommended requiring Tier 1 issuers that provide unaudited financial statements to label them as unaudited.[401]

Many commenters recommended allowing financial statements in Tier 2 offerings to be audited in accordance

[383] The rules for ongoing reporting are discussed in Section II.E. below.

[384] *See* Form 1–A, Part F/S (2014).

[385] *Id.*

[386] This age of financial statements requirement is also consistent with the treatment of foreign private issuers in the context of registered offerings. *See* Division of Corporation Finance's Financial Reporting Manual, at 6620, *available at: http://www.sec.gov/divisions/corpfin/cffinancialreportingmanual.pdf#topic6.*

[387] Form 1–A currently does not expressly limit the age of financial statements at qualification. In practice, however, Commission staff requires issuers to update financial statements before qualification to the extent such financial statements no longer satisfy Form 1–A's requirements for the age of financial statements at the time of filing.

[388] *See* paragraph (a)(3)(i) to Part F/S of proposed Form 1–A.

[389] *Id.*

[390] *See* paragraph (a)(3)(iv) to Part F/S of proposed Form 1–A.

[391] *See* discussion in Section II.E.1. below.

[392] *See* paragraph (a)(3)(i) to Part F/S of proposed Form 1–A.

[393] *See, e.g.,* CFA Institute Letter; ABA BLS Letter.

[394] ABA BLS Letter (noting that in light of the existing requirements, the proposed change did not seem unduly burdensome).

[395] Campbell Letter.

[396] *See, e.g.,* CFA Institute Letter; ABA BLS Letter; Campbell Letter.

[397] ABA BLS Letter; BDO Letter; Canaccord Letter; CAQ Letter; CFA Letter; CFIRA Letter 2; Deloitte Letter; E&Y Letter; Letter from KPMG LLP, March 24, 2014 (''KPMG Letter''); Letter from McGladrey LLP (''McGladrey Letter''); MoFo Letter; WOC Letter; WR Hambrecht + Co Letter.

[398] Letter from Jason Coombs, Co-Founder and CEO, Public Startup Company, Inc., March 25, 2014 (''Public Startup Co. Letter 3'') (suggesting three tiers, where at least the first two would not require audited financial statements); Public Startup Co. Letter 6.

[399] BDO Letter; CAQ Letter; Deloitte Letter; E&Y Letter; KPMG Letter; McGladrey Letter.

[400] CAQ Letter.

[401] CAQ Letter (recommending that such issuers disclose that the financial statements have not been subject to an audit or review by an independent accountant); E&Y Letter; KPMG Letter.

with either PCAOB standards or U.S. GAAS.[402] One commenter limited its recommendation to smaller Tier 2 issuers and conditioned this recommendation on the Commission not altering the requirement that auditors be independent under Rule 2–01 of Regulation S–X.[403] This commenter also recommended conditioning the ability to follow U.S. GAAS under Tier 2 on the issuer's showing of undue cost and impracticability in the offering statement and also limiting this relief to the issuer's initial Tier 2 offering. One commenter noted that because Regulation A issuers are not ''issuers'' (as defined in Section 2(a)(7) of the Sarbanes-Oxley Act of 2002),[404] when the audit is performed in accordance with PCAOB standards, AICPA rules would require the audit to be compliant with both AICPA and PCAOB standards and the auditor's report would have to reference both AICPA and PCAOB standards. This commenter also noted, however, that given recent changes to the auditor's report under AICPA standards, it may not be possible for the auditor to be in compliance with both AICPA and PCAOB standards from a reporting perspective.[405]

Additionally, two commenters expressed concern about potential confusion that could result from requiring PCAOB standards in Tier 2 offerings, but not requiring PCAOB registration.[406] One of these commenters recommended avoiding any potential confusion by allowing for audits under U.S. GAAS in Tier 2 offerings.[407] Another commenter stated that the issue could be resolved by requiring either the use of PCAOB-registered auditors for Tier 2 offerings or appropriate disclosure of the auditor's PCAOB registration status, noting that the disclosure option would result in lower costs to the issuer and fewer instances in which an issuer would need to have its financial statements audited a second time under PCAOB standards.[408]

One commenter asked the Commission to clarify issues relating to transition reporting for Tier 1 issuers that have previously conducted an offering pursuant to the exemption under Section 4(a)(6) and were required to file reviewed annual financial statements.[409] Another commenter asked the Commission to clarify the application of the audit requirements applicable to Tier 1 issuers that have audited financial statements prepared for other purposes, in light of potentially contradictory references in proposed Form 1–A to the ''standards of the PCAOB'' and the PCAOB auditing standards.[410] One commenter recommended not requiring audited financials under either Tier 1 or Tier 2 for ''small companies with limited revenues and assets.''[411] Another commenter raised concerns about allowing Tier 1 issuers to include financial statements audited using U.S. GAAS and not requiring that all audits be conducted by PCAOB-registered auditors.[412]

Many commenters recommend making other changes to the financial statement requirements not directly related to audit requirements.[413] A number of commenters suggested allowing companies to use alternatives under U.S. GAAP for non-public business entities when preparing their financial statements, since Regulation A issuers would otherwise be considered ''public business entities'' under FASB standards.[414] These commenters were concerned about the need for issuers to have their financial statements prepared and audited a second time under U.S. GAAP applicable to public business entities, as discussed in greater detail below. One commenter did not address this issue with respect to Tier 1, but recommended allowing the smallest Tier 2 issuers to follow alternatives under U.S. GAAP applicable to non-public business entities.[415] One commenter recommended allowing companies to include financial statements prepared in accordance with alternatives under U.S. GAAP for non-public business entities in offerings up to a specified minimum, suggesting $10 million or $20 million.[416] Another commenter recommended explicitly stating that Regulation A issuers are subject to ''public business entity'' requirements if the final rules do not provide for the use of, or a non-costly transition from, financial statements based on alternatives under U.S. GAAP for non-public business entities.[417] One commenter limited its recommendation with respect to the applicability of alternatives under U.S. GAAP for non-public business entities to Tier 1 issuers and to entities whose financial statements are required to be included in offering statements relying on Tier 1.[418] Another commenter noted that significant acquired businesses will qualify as ''public business entities'' because their financial statements are filed with the Commission.[419] As a result, financial statements of those businesses would also need to be revised, and an issuer would potentially need to have their financial statements prepared and audited a second time under U.S. GAAP applicable to public business entities.

Several commenters recommended allowing issuers under Regulation A to defer adopting new or revised accounting standards effective for public companies if non-public business entities have a delayed effective date (similar to accommodations for emerging growth companies under Section 102(b) of the JOBS Act).[420] Two commenters recommended either clarifying how the disclosure requirements for pro forma financial information in Part F/S for Tier 1 issuers differ from Rule 8–05 of Regulation S–X or requiring such Tier 1 issuers to follow Rule 8–05.[421] One commenter recommended allowing companies formed within nine months of the filing date of the offering statement to provide only a discussion of their financial condition and operations since inception, rather than financial statements as of a date within nine months of the date of filing.[422] This commenter further recommended aligning the financial statement updating requirements with the timing of periodic reports (*e.g.,* allowing for 120 days before year end financial statements are required in the offering statement, rather than 90 days).[423] This commenter also recommended that the Commission consider additional scaling for Regulation A offerings in the requirements concerning the financial statements of: Acquired or to-be-

[402] ABA BLS Letter; BDO Letter; Canaccord Letter; Deloitte Letter; E&Y Letter; KPMG Letter; McGladrey Letter; MoFo Letter; WR Hambrecht + Co Letter.

[403] ABA BLS Letter.

[404] 15 U.S.C. 7201(a) *et seq.*

[405] KPMG Letter.

[406] BDO Letter; Deloitte Letter.

[407] Deloitte Letter.

[408] BDO Letter.

[409] E&Y Letter.

[410] CAQ Letter.

[411] WOC Letter.

[412] CFA Letter.

[413] ABA BLS Letter; BDO Letter; Letter from Frederick D. Lipman, Blank Rome LLP, March 17, 2014 (''Blank Rome Letter''); Canaccord Letter; CAQ Letter; CFIRA Letter 1; Deloitte Letter; E&Y Letter; KPMG Letter; Karr Tuttle Letter; McGladrey Letter; MoFo Letter; PwC Letter; WR Hambrecht + Co Letter.

[414] ABA BLS Letter; Canaccord Letter; CAQ Letter; CFIRA Letter 1; Deloitte Letter; E&Y Letter; KPMG Letter; McGladrey Letter; MoFo Letter; WR Hambrecht + Co Letter.

[415] ABA BLS Letter.

[416] McGladrey Letter.

[417] KPMG Letter.

[418] E&Y Letter.

[419] Deloitte Letter.

[420] CAQ Letter; Deloitte Letter; E&Y Letter; KPMG Letter.

[421] CAQ Letter; PwC Letter.

[422] E&Y Letter.

[423] *Id.*

acquired businesses; guarantors of issuers of guaranteed securities; and, affiliates that collateralize an issuance.[424]

Another commenter recommended that Tier 2 issuers not be subject to Rule 8–04(b)(3) of Regulation S–X when the to-be-acquired business has significant loss operations.[425] This commenter recommended at least not applying Rule 8–04(b)(3) in situations where companies intend to eliminate the losses by dropping certain products or service lines of business that produced the loss. Another commenter recommended clarifying whether financial statements should also be dated within nine months of the qualification date of the offering statement.[426]

One commenter made a number of specific recommendations that we clarify language in particular paragraphs of the proposed requirements for financial statements in Part F/S of Form 1–A.[427] A different commenter indicated that proposed Form 1–A seemed to require issuers to disclose ''selected financial information'' and objected to any such requirement as being more onerous than the requirements otherwise applicable to smaller reporting companies.[428]

Several commenters specifically supported allowing Canadian issuers to prepare their financial statements in accordance with IFRS as issued by the IASB, as proposed.[429] More generally, many commenters recommended allowing foreign issuers to use IFRS as issued by the IASB to prepare their financial statements.[430] One commenter recommended allowing U.S. companies to use IFRS when conducting offerings in Canada.[431] This comment was made within the context of providing U.S. companies the ability to list on a Canadian exchange without being subject to resale restrictions imposed by Regulation S. Three commenters specifically opposed adding an XBRL requirement.[432]

(c) Final Rules for Financial Statements

As discussed more fully below, we are adopting requirements for financial statements in Part F/S of Form 1–A with changes from the proposed rules that are designed to simplify and lower the cost of compliance for issuers, while maintaining important investor protections. As proposed, the final rules require Tier 1 and Tier 2 issuers to file balance sheets and other required financial statements as of the two most recently completed fiscal year ends (or for such shorter time that they have been in existence). With the exception of the requirement to file two years of balance sheets, the final rules largely maintain the existing financial statement requirements of current Part F/S for Tier 1 offerings, while requiring Tier 2 issuers to file audited financial statements in Part F/S.

Financial statements for U.S.-domiciled issuers will be required to be prepared in accordance with U.S. GAAP, as is currently the case. Canadian issuers, however, may prepare financial statements in accordance with either U.S. GAAP or International Financial Reporting Standards (IFRS) as issued by the International Accounting Standards Board (IASB).[433]

Additionally, consistent with the suggestions of commenters and in order to be consistent with the treatment of emerging growth companies under Section 102(b)(1) of the JOBS Act, the final rules permit issuers, where applicable, to delay the implementation of new accounting standards to the extent such standards provide for delayed implementation by non-public business entities.[434] In this regard, with respect to the delayed implementation of new or revised financial accounting standards, if the issuer chooses to take advantage of the extended transition period to the same extent that a ''non-issuer'' company is permitted to, the issuer:

- Must disclose such choice at the time the issuer files the offering statement; and
- May not take advantage of the extended transition period with respect to some standards and not others, but must apply the same choice to all standards.[435]

However, issuers electing not to use this accommodation must forgo this accommodation for all financial accounting standards and may not elect to rely on this accommodation in any future filings.[436]

As proposed, the final rules require issuers conducting Tier 1 offerings to follow the requirements for the form and content of their financial statements set out in Part F/S, rather than following the requirements in Regulation S–X.[437] However, consistent with a comment received,[438] in certain less common circumstances, such as for an acquired business or subsidiary guarantors, Part F/S directs issuers conducting Tier 1 offerings to certain portions of Regulation S–X that provide guidance on when financial statements for entities other than the issuer are required.[439] In Tier 1 offerings the form and content of the financial statements for those other entities also follow the requirements set out in Part F/S. We believe this guidance will assist issuers with compliance with the general requirements for financial statement disclosure in these less common circumstances and is an appropriate change in the final rules. In an effort to reduce confusion, as suggested by commenters,[440] the final rules also direct issuers to Rule 8–05 of Regulation S–X for pro forma information disclosure requirements. Additionally, the final rules require compliance with Rule 8–06 of Regulation S–X for real estate operations acquired because real estate companies and REITs are eligible issuers.

The final rules require Tier 2 issuers to follow the financial statement requirements of Article 8 of Regulation S–X, as if the issuer were a smaller reporting company, unless otherwise

[424] *Id.*

[425] Blank Rome Letter.

[426] E&Y Letter (referring to paragraphs (a)(3)(i) and (b)(2) of Part F/S of proposed Form 1–A).

[427] E&Y Letter, Appendix B.

[428] CAQ Letter. *See* Section II.C.3.a. above.

[429] ABA BLS Letter; Canaccord Letter; MoFo Letter; NASAA Letter 2; PwC Letter.

[430] ABA BLS Letter (although supporting excluding non-Canadian foreign companies); Andreessen/Cowen Letter; Canaccord Letter (stating generally that the Commission should clarify that companies may use IFRS); CAQ Letter; Deloitte Letter; PwC Letter.

[431] Karr Tuttle Letter.

[432] BIO Letter; MoFo Letter; U.S. Chamber of Commerce Letter.

[433] If the financial statements comply with IFRS as issued by the IASB, such compliance must be unreservedly and explicitly stated in the notes to the financial statements and the auditor's report must include an opinion on whether the financial statements comply with IFRS as issued by the IASB. *See* General Rule (a)(2) to Part F/S of Form 1–A.

[434] CAQ Letter; Deloitte Letter; E&Y Letter; KPMG Letter. *See also* Section 7(a)(2)(B) of the Securities Act, 15 U.S.C. 77g(a)(2)(B), and Section 13(a) of the Exchange Act, 15 U.S.C. 78m(a).

[435] *See* paragraph (a)(3) of Part F/S of Form 1–A.

[436] *Id.*

[437] *See* paragraph (b) of Part F/S of Form 1–A.

[438] E&Y Letter.

[439] We are updating the requirements for financial statements of businesses acquired or to be acquired in Part F/S to refer to the requirements of Rule 8–04 of Regulation S–X. We are also providing specific references to the relevant provisions of Regulation S–X regarding the requirements for financial statements of guarantors and the issuers of guaranteed securities (Rule 3–10 of Regulation S–X), financial statements of affiliates whose securities collateralize an issuance of securities (Rule 3–16 of Regulation S–X), financial statements provided in connection with oil and gas producing activities (Rule 4–10 of Regulation S–X), pro forma financial information (Rule 8–05 of Regulation S–X) and income statements for real estate operations acquired or to be acquired (Rule 8–06 of Regulation S–X). The financial statements provided in these circumstances would only be required to be audited to the extent the issuer had already obtained an audit of those financial statements for other purposes.

[440] CAQ Letter; PwC Letter.

noted in Part F/S.[441] This requirement also includes any financial information required for Tier 1 offerings, as discussed above, such as acquired businesses required by Rule 8–04 and 8–05 of Regulation S–X.[442]

As adopted, financial statements in a Tier 1 offering are not required to be audited. Consistent with the suggestions of commenters,[443] and in order to avoid potential confusion as to the presentation of financial statements, issuers in Tier 1 offerings that do not provide audited financial statements must label their financial statements as unaudited. However, the final rules clarify that, if an issuer conducting a Tier 1 offering has already obtained an audit of its financial statements for other purposes, and that audit was performed in accordance with U.S. GAAS or the standards of the PCAOB, and the auditor followed the independence standards of either Rule 2–01 of Regulation S–X or the independence standards of the AICPA, then those audited financial statements must be filed.[444] We believe the requirement to file already available audited financial statements will benefit investors. The auditor need not be registered with the PCAOB. While audited financial statements are not generally required to be filed for Tier 1 offerings, allowing auditors to follow the independence standards of the AICPA or Rule 2–01 of Regulation S–X is consistent with the suggestions of most commenters and will provide smaller issuers that seek to submit ''audited'' financial statements in Tier 1 offerings with greater flexibility in satisfying the financial statement requirements.[445] We agree that, when available, financial statements that satisfy the financial statement requirements and that have been audited by an auditor that meets the independence standards of the AICPA should be deemed ''audited'' for purposes of Tier 1 offerings.

Issuers conducting Tier 2 offerings are, by contrast, required to have their financial statements audited. The auditor of financial statements being filed as part of a Tier 2 offering must be independent under Rule 2–01 of Regulation S–X and must comply with the other requirements of Article 2 of Regulation S–X, but need not be PCAOB-registered.[446] In a change from the proposed rules, and consistent with the suggestions of commenters,[447] the final rules require issuers conducting Tier 2 offerings to provide financial statements that are audited in accordance with either U.S. GAAS or the standards issued by the PCAOB.

As noted above, one commenter indicated that, because Regulation A issuers are not ''issuers,'' as defined by Section 2(a)(7) of the Sarbanes-Oxley Act of 2002, AICPA rules would require the audit to be compliant with U.S. GAAS even if the auditor has conducted the audit in accordance with PCAOB standards. Staff of the Commission consulted with the AICPA on this issue and has been advised that an audit performed by its members of an issuer conducting an offering pursuant to Regulation A would be required to comply with U.S. GAAS in accordance with the AICPA's Code of Professional Conduct.[448] As a result, an auditor for a Regulation A issuer who is conducting its audit in accordance with PCAOB standards would also be required to comply with U.S. GAAS, and the auditor would need to comply with the reporting requirements of both the AICPA standards and the PCAOB standards. As further noted by this commenter,[449] there may be some question as to whether an auditor can currently comply with both sets of standards when issuing its auditor's report. Commission staff also consulted with the AICPA on this issue and has been informed that the AICPA will consider taking action to address this potential conflict so that an auditor's report would be able to comply with both sets of auditing standards.

Thus, requiring issuers in Tier 2 offerings to have their financial statements audited in accordance with PCAOB standards would have the effect of requiring issuers to comply with two sets of auditing standards and potentially result in audits for Tier 2 issuers being subject to additional incremental costs than would be required for registered offerings (which are only subject to PCAOB auditing standards). To avoid such a result, the final rules permit Tier 2 issuers the option of following U.S. GAAS or the standards of the PCAOB.[450]

We believe that providing issuers with this option could help reduce the cost of required audits in Tier 2 offerings while maintaining appropriate safeguards for investors. We believe audits conducted in accordance with U.S. GAAS provide sufficient protection for investors in Regulation A offerings, especially in light of the requirement that auditors for Tier 2 offerings must be independent under Rule 2–01 of Regulation S–X. Moreover, we believe that the flexibility adopted in the final rules is more appropriately tailored for the different types of issuers likely to conduct Tier 2 offerings because it will not only eliminate the potential that existed under the proposed rules that some issuers would need to have their financial statements audited a second time under PCAOB standards, but also continue to permit issuers, such as those that may seek concurrent registration of a class of securities under the Exchange Act, to comply with the PCAOB standards if they so choose.[451]

An issuer that includes financial statements audited in accordance with U.S. GAAS and PCAOB standards will likely incur additional incremental costs compared with an issuer that includes financial statements audited only in accordance with U.S. GAAS. However, we assume that an issuer would only elect to comply with both sets of auditing standards because it has concluded that the benefit of doing so (for example, to facilitate Exchange Act registration) justify these additional incremental costs. Commission staff understands that many firms that conduct audits using PCAOB standards have developed their methodology in a manner that would comply with both sets of standards, which could help contain the costs related to complying with both U.S. GAAS and PCAOB auditing standards.

An issuer conducting a Regulation A offering that seeks to concurrently register its securities under the Exchange Act would be required to file audited financial statements that are prepared in accordance with the standards of the PCAOB by an auditor that is PCAOB-registered.[452] The final rules therefore provide Regulation A

[441] *See* paragraph (c) of Part F/S of Form 1–A.

[442] Tier 2 issuers would, however, follow paragraphs (c)(1) of Part F/S of Form 1–A with respect to the age of the financial statements and the periods to be presented. In Tier 2 offerings, the form and content of financial statements for other entities follow the requirement of Article 8 of Regulation S–X.

[443] CAQ Letter; E&Y Letter; KPMG Letter.

[444] *See* CAQ Letter (requesting clarification on this issue).

[445] While not a requirement, issuers in Tier 1 offerings may have independent business reasons why they seek to provide, or investors that may otherwise demand, audited financial statements.

[446] *See* paragraph (c)(1)(iii) of Part F/S of Form 1–A.

[447] ABA BLS Letter; BDO Letter; Canaccord Letter; Deloitte Letter; E&Y Letter; KPMG Letter; McGladrey Letter; MoFo Letter; WR Hambrecht + Co Letter.

[448] The AICPA Code of Professional Conduct is available at: *http://pub.aicpa.org/codeofconduct/ethicsresources/et-cod.pdf.*

[449] *See* KPMG Letter.

[450] As discussed above, however, compliance with PCAOB standards could also require compliance with U.S. GAAS.

[451] *See, e.g.,* Section II.E.3.c (Exchange Act Registration of Regulation A Securities) below.

[452] *See* Section 12 of the Exchange Act, Section 102 of the Sarbanes Oxley Act of 2002 and Article 2 of Regulation S–X.

issuers with the option to provide financial statements in Part F/S of Form 1–A that comply with correlating requirements under the Exchange Act.[453]

The Form 1–A financial statement requirements are being further updated to be consistent with the timetable for ongoing reporting.[454] The final rules extend the permissible age of financial statements in Form 1–A to nine months, in order to permit the provision of financial statements that are updated on a timetable consistent with our requirement for semiannual interim reporting.[455] As proposed, the final rules add a new limitation on the age of financial statements at qualification, under which an offering statement cannot be qualified if the date of the most recent balance sheet included under Part F/S is more than nine months before the date of qualification.[456] For filings made more than three months but no more than nine months after the end of the issuer's most recently completed fiscal year end, issuers are required to include a balance sheet as of the two most recently completed fiscal year ends.[457] For filings made more than nine months after the end of the issuer's most recently completed fiscal year end, the balance sheet is required to be dated as of the two most recently completed fiscal year ends and an interim balance sheet must be included as of a date no earlier than six months after the end of the most recently completed fiscal year.[458] If interim financial statements are required, they are required to cover a period of at least six months.[459] Requiring issuers to file interim financial statements no older than nine months and covering a minimum of six months has the beneficial effect of eliminating what would otherwise be a requirement for certain issuers to provide quarterly interim financial statements during the qualification process and is consistent with the timing of the ongoing reporting requirements adopted today.[460] We are generally maintaining the requirement of existing Form 1–A concerning the date after which an issuer must provide financial statements dated as of the most recently completed fiscal year, but are changing the interval from 90 calendar days to three months, which we believe will simplify compliance by allowing issuers to follow full months. In order to further simplify compliance with the final rules, we also revised Part F/S of Form 1–A to streamline the application of, and simplify the language in, the rules without substantively changing the required content.

Although we solicited comment on whether issuers conducting Tier 2 offerings should be required to provide their financial statements to the Commission and on their corporate Web sites in interactive data format using XBRL, we are not adopting any such requirement in the final rules.[461] Commenters that addressed this issue opposed requiring the use of XBRL in Regulation A filings.[462] We agree and do not believe that requiring the use of XBRL in Regulation A filings would be an appropriately tailored requirement for smaller issuers at this time.[463]

On December 23, 2013, after we proposed rules for Regulation A, the Financial Accounting Standards Board (FASB) and Private Company Council (PCC) issued a guide for evaluating financial accounting and reporting for non-public business entities.[464] The PCC was created in 2012 by the FASB and the Financial Accounting Foundation (FAF) to improve the standard-setting process, and provide for accounting and reporting alternatives, for non-public business entities under U.S. GAAP.[465] As the standards for non-public business entities are new, there are currently very few distinctions between U.S. GAAP for public and non-public business entities. Over time, however, more distinctions between non-public business entity and public company accounting standards could develop.

Issuers that offer securities pursuant to Regulation A will be considered ''public business entities'' as defined by the FASB and, therefore, ineligible to rely on any alternative accounting or reporting standards for non-public business entities.[466] Even though issuers of securities in a Regulation A offering fit within the definition of ''public business entity,'' the Commission retains the authority to determine whether or not such issuers would be permitted to rely on the developing non-public business entity standards.[467]

The distinction between public and non-public business entity standards was not directly contemplated in the Proposing Release, as the FASB/PCC Guide was issued after the Regulation A proposal was approved by the Commission.[468] Commenters, however, generally expressed concern about the costs associated with requiring non-public business entities (*e.g.,* non-Exchange Act reporting companies) to follow public company U.S. GAAP accounting standards, particularly on a going forward basis.[469] Commenters also expressed concern about the potential that an issuer would need to have its financial statements prepared and audited a second time, which would likely increase the costs associated with any previously obtained financial statements by a non-public business entity that would not comply with the financial statement requirements of an exemption that requires such issuer to follow the standards applicable to public business entities.[470]

The final rules do not allow Regulation A issuers to use the alternatives available to non-public business entities under U.S. GAAP in the preparation of their financial statements. One of the significant factors considered by the FASB in developing its definition of ''public business entity'' was the number of primary users of the financial statements and their access to

[453] If the final rules did not permit issuers to prepare audited financial statements in accordance with the standards of the PCAOB, Regulation A issuers that rely on the amendments to Form 8–A adopted today in order to register a class of securities pursuant to Section 12 of the Exchange Act would have to have their financial statements audited a second time under PCAOB standards by a PCAOB registered auditor.

[454] Our final rules for ongoing reporting are discussed in Section II.E.1. below.

[455] *See* paragraph(s) (b)(3)–(4) of Part F/S of Form 1–A for Tier 1 issuers, which also apply to Tier 2 issuers by virtue of paragraph (c)(1) of Part F/S of Form 1–A.

[456] *Id.*

[457] *See* paragraph (b)(3)(A) of Part F/S of Form 1–A.

[458] *See* paragraph (b)(3)(B) of Part F/S of Form 1–A.

[459] *See* paragraph (b)(4) of Part F/S of Form 1–A.

[460] *See, e.g.,* discussion in Section II.E.1. below.

[461] Data becomes interactive when it is labeled or ''tagged'' using a computer markup language such as XBRL that software can process for analysis. For a discussion of current financial statement interactive data requirements, *see* Rel. No. 33–9002 (Jan. 30, 2009) [74 FR 6776].

[462] BIO Letter; MoFo Letter; US Chamber of Commerce Letter.

[463] We recognize, however, that future technological developments may lessen the burden to smaller issuers associated currently with XBRL, at which time we may revisit this initial determination.

[464] The Private Company Decision-Making Framework: A Guide for Evaluating Financial Accounting and Reporting for Private Companies (the ''PCC Guide''), *available at: http://www.fasb.org/cs/ContentServer?c=Document_C&pagename=FASB%2FDocument_C%2FDocumentPage&cid=1176163703583.*

[465] For a brief history behind the creation of the PCC, *see: http://www.fasb.org/cs/ContentServer?c=Page&pagename=FASB%2FPage%2FSectionPage&cid=1351027243391.*

[466] *See* numbered paragraph 12 of the PCC Guide, p. 3.

[467] *Id.*

[468] The Commission approved the proposed rules on December 18, 2013, while the PCC Guide was issued on December 23, 2013.

[469] ABA BLS Letter; Canaccord Letter; CAQ Letter; CFIRA Letter 1; Deloitte Letter; E&Y Letter; KPMG Letter; McGladrey Letter; MoFo Letter; WR Hambrecht + Co Letter.

[470] *Id.*

management.[471] As the FASB noted, ''users of private company financial statements have continuous access to management and the ability to obtain financial information throughout the year.'' [472] As the number of investors increases and the ability to influence management decreases, it is important that all investors receive or have timely access to comprehensive financial information. As a result, the Commission believes that investor protection is enhanced by Regulation A issuers providing financial statements prepared in the same manner as other entities meeting the FASB's definition of ''public business entity.''

c. Part III (Exhibits)

We proposed to maintain the existing exhibit requirements in Part III of Form 1–A. Additionally, we proposed to continue to permit issuers to incorporate by reference certain information in documents filed under Regulation A that is already available on EDGAR, but also require issuers to describe the information incorporated by reference and include a hyperlink to such exhibit on EDGAR.[473] As proposed, issuers also would have to be subject to the ongoing reporting obligations for Tier 2 offerings in order to avail themselves of this accommodation.

We did not receive any comments on the proposed exhibit requirements for Part III of Form 1–A, and are adopting the proposed exhibit requirements substantially as proposed. As adopted, issuers will be required to file the following exhibits with the offering statement: Underwriting agreement; charter and by-laws; instrument defining the rights of securityholders; subscription agreement; voting trust agreement; material contracts; plan of acquisition, reorganization, arrangement, liquidation, or succession; escrow agreements; consents; opinion regarding legality; ''testing the waters'' materials; appointment of agent for service of process; and any additional exhibits the issuer may wish to file.[474] In a change from the proposed requirements, however, the final rules no longer require issuers to file schedules (or similar attachments) to material contracts in all instances. As adopted, issuers are permitted to exclude schedules (or similar attachments) to material contracts if not material to an investment decision or if the material information contained in such schedules is otherwise disclosed in the agreement or the offering statement. Any material contract filed in response to Item 17, however, must contain a list briefly identifying the contents of all omitted schedules, together with an agreement to furnish supplementally a copy of any omitted schedule to the Commission upon request.

We are adopting final rules that permit issuers to incorporate by reference certain information that is already available on EDGAR. In a change from the proposed rules, incorporation by reference will not be limited to documents previously filed pursuant to Regulation A and will not be limited to issuers subject to Tier 2 ongoing reporting obligations. We believe that this change will continue to facilitate the provision of required information to investors, while taking a consistent approach to information previously provided to the Commission and publicly available on EDGAR. Issuers that seek to incorporate by reference are further required to describe the information incorporated by reference and include a hyperlink to such exhibit on EDGAR.[475] As proposed, such issuers must be subject to the ongoing reporting obligations for Tier 2 offerings. Additionally, as proposed, to the extent post-qualification amendments to offering statements must include audited financial statements, the final rules require the consent of the certifying accountant to the use of such accountant's report in connection with amended financial statements to be included as an exhibit.[476] The final rule, however, clarifies that the requirement to file the consent of the certifying accountant only applies where the financial statements required to be filed are amended.[477]

d. Signature Requirements

Similar to the requirement for issuers in registered offerings, we proposed to require issuers to manually sign a copy of the offering statement before or at the time of filing and retain it for a period of five years.[478] Issuers would be required to produce the manually signed copy to the Commission, upon request.[479] Additionally, we proposed to eliminate the requirement that, where an issuer filing a Form 1–A is a Canadian issuer, its authorized representative in the United States is required to sign the offering statement.[480] Also, we proposed to maintain the requirement that Canadian issuers file a Form F–X [481] to provide an express consent to service of process in connection with offerings qualified under Form 1–A. This treatment is similar to requirements for Canadian companies making filings under the multijurisdictional disclosure system.[482]

We did not receive any comments on this aspect of the proposal, and are adopting these provisions, as proposed, in the final rules.[483]

4. Continuous or Delayed Offerings and Offering Circular Supplements

a. Proposed Rules

Rule 251(d)(3) currently allows for continuous or delayed offerings under Regulation A if permitted by Rule 415.[484] By reference to the undertakings of Item 512(a) of Regulation S–K,[485] Rule 415 does not necessarily require every change in the information contained in a prospectus to a registration statement in a continuous offering to be reflected in a post-effective amendment.[486] On the other hand, currently Regulation A requires every revised or updated offering circular in a continuous offering to be filed as an amendment to the offering statement to which it relates and to be qualified in a process similar to the Commission staff review, comment and qualification process for initial offering statements.[487] The requalification

[471] PCC Guide, p. 6.

[472] *Id.*

[473] *See* General Instruction III to proposed Form 1–A and discussion in Section II.C.3.b(1). above regarding incorporation by reference in Part II of Form 1–A. The hyperlink must be active at the time of filing, but need not remain active after filing.

[474] *See* Part III (Exhibits) of Form 1–A.

[475] *See* General Instruction III to Form 1–A. The hyperlink must be active at the time of filing, but need not remain active after filing.

[476] This is consistent with current practice under Regulation A, but will be made an express requirement under the final rules. *See* Rule 252(f)(1)(ii).

[477] *See id.*

[478] *See* Instructions 2 and 3 to Signatures in proposed Form 1–A; *cf.* Rule 402(e), 17 CFR 230.402(e).

[479] *Id.*

[480] *See* 17 CFR 230.252(f) (2014) and Instruction 1 to Signatures of Form 1–A (2014).

[481] 17 CFR 239.42.

[482] *See* Rel. No. 33–6902 (June 21, 1991) [56 FR 30036] (adopting the multijurisdictional disclosure system).

[483] *See* Instructions to Signatures, Form 1–A.

[484] 17 CFR 230.415. Certain shelf offerings, however, are only permissible in offerings on Form S–3, which Regulation A issuers are ineligible to use. *See, e.g.,* Rule 415(a)(1)(x).

[485] 17 CFR 230.415(a)(3).

[486] *See* 17 CFR 229.512(a)(1) (requiring issuers to file a post-effective amendment for purposes of an update under Section 10(a)(3) of the Securities Act, to reflect any facts or events arising after effectiveness that, individually or in the aggregate, represent a fundamental change in the information set forth in the registration statement, or to include, subject to certain exceptions, any material information with respect to the plan of distribution not previously disclosed (or material changes to information previously disclosed) in the registration statement).

[487] *See* 17 CFR 230.253(e) (2014); 17 CFR 230.252(h)(1) (2014).

process can be costly and time consuming for smaller issuers conducting continuous offerings of securities pursuant to Regulation A. We proposed to clarify in the rules for Regulation A the scope of permissible continuous or delayed offerings and the related concept of offering circular supplements.

Rule 415 attempts to promote efficiency and cost savings in the securities markets by allowing for the registration of certain traditional and other shelf offerings.[488] Prior to the adoption of final rules today, Rule 251(d)(3) of Regulation A allowed for continuous or delayed offerings under Regulation A if permitted by Rule 415.[489] When Rule 415 was adopted, the Commission recognized that certain traditional shelf offerings have been allowed by administrative practice for many years despite the absence of such a rule.[490] Since Rule 415 only addresses registered offerings, however, the precise scope of continuous or delayed offerings under Regulation A has been unclear.

The proposed rules would clarify the scope of permissible continuous or delayed offerings under Regulation A and the related concept of offering circular supplements, and otherwise continue to allow for certain traditional shelf offerings to promote flexibility, efficiency, and to reduce unnecessary offerings costs.[491] Further, as proposed, an issuer's ability to sell securities in a continuous or delayed offering would be conditioned on being current with the Tier 2 ongoing reporting requirements at the time of sale.[492]

To provide clarity regarding the application of Rule 415 concepts to Regulation A offerings, we proposed to add a provision to Regulation A similar to Rule 415, but with limitations that we believed would be appropriate for Regulation A. The provision would establish time limits similar to those in Rule 415 and make conforming changes as necessary.[493]

In the Proposing Release we proposed excluding types of shelf offerings that cannot be conducted under existing Regulation A, such as offerings requiring registration on Form F–6, offerings requiring primary eligibility to use Forms S–3 or F–3,[494] offerings conducted by issuers ineligible to use Regulation A,[495] as well as certain offerings that we do not currently believe would be appropriate to include in the Regulation A framework. Further, we proposed prohibiting all ''at the market'' offerings under Regulation A.[496]

Additionally, as proposed, changes in the information contained in the offering statement would no longer necessarily trigger an obligation to amend.[497] Offering circulars for continuous Regulation A offerings would, however, continue to be required to be updated annually through the filing of a post-qualification amendment. These annual post-qualification amendments would include updated financial statements and post-qualification amendments would also be required when updating the offering circular to reflect facts or events arising after qualification which, in the aggregate, represent a fundamental change in the information set forth in the offering statement.[498]

In addition to these post-qualification amendments to the offering statement that must be qualified, we also proposed to allow issuers to use offering circular supplements in certain situations.[499] Further, we proposed to permit issuers in continuous offerings to qualify additional securities in reliance on Regulation A by a post-qualification amendment.[500]

We also proposed provisions similar to Rule 424 that would require issuers omitting certain information from an offering statement at the time of qualification, in reliance on proposed Rule 253(b), to file such information as an offering circular supplement no later than two business days following the earlier of the date of determination of such pricing information or the date of first use of the offering circular after qualification.[501] Further, these proposed provisions would require offering circulars that contain substantive changes in information previously provided in the last offering circular (other than information omitted in reliance on proposed Rule 253(b)) to be filed within five business days after the date such offering circular is first used after qualification.[502] Offering circular supplements that are not filed within the required time frames provided by the proposed rules would be required to be filed as soon as practicable after the discovery of the failure to file.[503]

b. Comments on Proposed Rules

Commenters were generally supportive of the proposed modernization of Regulation A's offering process, in general, and the provisions for continuous or delayed offerings, in particular.[504] Two commenters, however, recommended allowing for at the market offerings under Regulation A.[505] Additionally, one commenter recommended allowing for at the market offerings in non-penny stocks on established trading markets.[506] Another commenter recommended allowing for at the market offerings in securities that qualify for the actively-traded securities exceptions in Rules 101 and 102 of Regulation M.[507] This commenter suggested that the offering amount could be determined by using the calculation set forth in Securities Act Rule 457(c)[508] as of a specified date within five business days of qualification of the offering statement.

c. Final Rules

We believe the proposed rules sufficiently update existing rules, while providing issuers with adequate flexibility with respect to, and additional guidance on, the permissible scope of continuous or delayed Regulation A offerings and offering

[488] *See* Rel. No. 33–6499 [48 FR 52889] (Nov. 23, 1983) (noting the efficiency and cost savings issuers experienced during the eighteen month trial period for a previous temporary version of the rule).

[489] 17 CFR 230.415.

[490] Certain ''traditional shelf offerings'' have been allowed since at least 1968 by the Commission's guides for the preparation and filing of registration statements, such as Guide 4, and related administrative practice. *See id.; see also* Rel. No. 33–4936 [33 FR 18617] (Dec. 9, 1968) (adopting Guide 4 and other Commission guides).

[491] *See* Proposing Release, at Section II.C.4.

[492] Proposed Rule 251(d)(3)(i)(F).

[493] Proposed Rule 251(d)(3).

[494] *See also* fn. 484 above.

[495] Rule 415(a)(1)(xi) discusses investment companies and BDCs.

[496] *See* proposed Rule 251(d)(3)(ii).

[497] *See* proposed Rule 252(h)(2).

[498] *Id.*

[499] *See* proposed Rule 253(g).

[500] *See* proposed Rule 251(d)(3)(i)(F) and note to proposed Rule 253(b).

[501] *See* proposed Rule 253(g).

[502] *See* proposed Rule 253(g)(2).

[503] *See* proposed Rule 253(g)(4).

[504] *See, e.g.,* ABA BLS Letter; KVCF Letter; OTC Markets Letter; Paul Hastings Letter.

[505] OTC Markets Letter; Paul Hastings Letter.

[506] OTC Markets Letter. This commenter also recommended that securities offered under Regulation A that are not penny stocks and that trade on an established public market should be treated as having a ''ready market'' and thus be considered eligible for margin purposes, which the commenter believed would increase the value of securities and their liquidity.

[507] Paul Hastings Letter. Regulation M was adopted by the Commission in 1996 and is intended to prevent potentially manipulative practices by underwriters, issuers, selling securityholders, and other participants in a securities offering. *See* Rel. No. 38067 (December 20, 1996) [62 FR 520].

[508] Rule 457(c) specifies that Securities Act registration fees for securities offered on the basis of fluctuating market prices shall be calculated as follows: Either the average of the high and low prices reported in the consolidated reporting system (for last sale reported over-the-counter securities) or the average of the bid and asked price (for other over-the-counter securities) as of a specified date within 5 business days prior to the date of filing the offering statement.

circular supplements. We are adopting these rules as proposed.

The final rules add Rule 251(d)(3) to Regulation A, without changes from the proposed rule. This provision is similar to Rule 415, but its scope is limited to permissible Regulation A offerings.[509] In this regard, the final rules for Regulation A will continue to allow for certain traditional shelf offerings to promote flexibility, efficiency, and to reduce unnecessary offerings costs.[510] The final rules will condition the ability of an issuer to sell securities in a continuous offering on being current in its annual and semiannual report filing, if required under Rule 257(b), at the time of sale.[511] As we indicated in the Proposing Release, we believe this additional condition will not impose incremental costs on issuers, which are in any case required to update their offering statement and to file such ongoing reports, and will promote parity of information in the secondary markets.

As proposed, the final rules provide for the following types of continuous or delayed offerings:

- Securities offered or sold by or on behalf of a person other than the issuer or its subsidiary or a person of which the issuer is a subsidiary;
- securities offered and sold pursuant to a dividend or interest reinvestment plan or an employee benefit plan of the issuer;
- securities issued upon the exercise of outstanding options, warrants, or rights;
- securities issued upon conversion of other outstanding securities;
- securities pledged as collateral; or
- securities that are part of an offering which commences within two calendar days after the qualification date, will be offered on a continuous basis, may continue to be offered for a period in excess of 30 days from the date of initial qualification, and will be offered in an amount that, at the time the offering statement is qualified, is reasonably expected to be offered and sold within two years from the initial qualification date.[512]

Notwithstanding the suggestions of commenters regarding at the market offerings, we continue to believe that such offerings are not appropriate for Regulation A offerings, particularly at the outset of the adoption of today's amendments to the existing rules. While it is possible that a market in Regulation A securities may develop that is capable of supporting primary and secondary at the market offerings, rather than permit such offerings at the outset, we believe that any determination as to whether the exemption would be an appropriate method for such offerings should occur in the future. Further, an offering sold at fluctuating market prices may not be appropriate within the context of an exemption that is contingent upon not exceeding a maximum offering size.

Under the final rules, as proposed, changes in the information contained in the offering statement will no longer necessarily trigger an obligation to amend.[513] Offering circulars for continuous or delayed Regulation A offerings will continue to be required to be updated, and the offering statements to which they relate requalified annually to include updated financial statements, and otherwise as necessary to reflect facts or events arising after qualification which, in the aggregate, represent a fundamental change in the information set forth in the offering statement.[514] In addition to post-qualification amendments to the offering statement that must be qualified, the final rules also will allow issuers to use offering circular supplements in certain situations.[515] Further, issuers in continuous offerings will be permitted to qualify additional securities in reliance on Regulation A by a post-qualification amendment.[516]

The final rules will, as proposed, permit offering circular supplements to be used for final pricing information, where the offering statement is qualified on the basis of a bona fide price range estimate.[517] Additionally, the final rules permit offering circulars to omit information with respect to the underwriting syndicate analogous to the provisions for registered offerings under Rule 430A.[518] However, the final rules do not allow an issuer to omit the volume of securities (the number of equity securities or aggregate principal amount of debt securities) to be offered.[519] The final rules also permit, as proposed, offering circular supplements to reflect a decrease in the volume of, or to change the price range of, the securities offered in reliance on a qualified offering statement under Regulation A, so long as the decrease in the volume of securities offered or change in the price range would not materially change the disclosure contained in the offering statement at qualification.[520] Notwithstanding this provision, any decrease in the volume of securities offered and any deviation from the low or high end of the price range may be reflected in the offering circular supplement filed with the Commission if, in the aggregate, the decrease in volume and/or change in price represent no more than a 20% change from the maximum aggregate offering price calculable using the information in the qualified offering statement.[521] Under no circumstances, however, would an issuer be able to amend its offering statement or rely on the provisions for offering circular supplements where the maximum aggregate offering price resulting from any changes in the price of the securities would exceed the offering amount limitation set forth in Rule 251(a) or if the increase in aggregate offering price would result in a Tier 1 offering becoming a Tier 2 offering.[522]

We are also adopting as proposed provisions similar to Rule 424 that require issuers omitting certain pricing and price-related information from an offering statement at the time of qualification, in reliance on Rule 253(b), to file such information as an offering circular supplement no later than two business days following the earlier of the date of determination of such pricing information or the date of first use of the offering circular after qualification.[523] These provisions require offering circulars that contain substantive changes (other than information omitted in reliance on Rule 253(b)) in information previously provided in the last offering circular to be filed within five business days after the date such offering circular is first used after qualification.[524] Offering circular supplements that are not filed within the required time frames provided by the rules are required to be

[509] Rule 251(d)(3).

[510] *See* Rel. No. 33–6499, at IV.A. (''[T]he procedural flexibility afforded by the Rule enables a registrant to time its offering to avail itself of the most advantageous market conditions . . . registrants are able to obtain lower interest rates on debt and lower dividend rates on preferred stock, thereby benefiting their existing shareholders.'').

[511] This condition only applies to continuous offerings under Rule 251(d)(3)(i)(F).

[512] *Id.*

[513] Rule 252(f)(2).

[514] *Id.*

[515] Rule 253(g).

[516] Rule 251(d)(3)(i)(F) and note to Rule 253(b).

[517] Rule 253(b)(2). The bona fide price range estimate may not exceed $2 for offerings where the upper end of the range is $10 or less and 20% if the upper end of the price range is over $10.

[518] Rule 253(b) (also permitting the omission of underwriting discounts or commissions, discounts or commissions to dealers, amount of proceeds, conversion rates, call prices and other items dependent upon the offering price, delivery dates, and terms of the securities dependent upon the offering date, so long as certain conditions are met).

[519] Rule 253(b)(4).

[520] *See* note to Rule 253(b).

[521] *Id.*

[522] *Id.*

[523] Rule 253(g)(1).

[524] Rule 253(g)(2).

filed as soon as practicable after the discovery of the failure to file.[525]

5. Qualification

Under existing Regulation A, an offering statement is generally only qualified by order of the Commission in a manner similar to a registration statement being declared effective.[526] In such instances, the issuer includes a delaying notation on the cover of the Form 1–A stating that the offering statement shall only be qualified by order of the Commission.[527] In order to remove a delaying notation, an issuer must file an amendment to the offering statement indicating that the offering statement will become qualified on the 20th calendar day after filing.[528] An offering statement that does not include a delaying notation will be qualified without Commission action on the 20th calendar day after filing.[529]

We proposed to alter the qualification process of existing Regulation A. As proposed, an offering statement could only be qualified by order of the Commission, and the process associated with the delaying notation would be eliminated. A few commenters generally supported the proposed elimination of qualification without Commission action.[530] No commenters opposed this aspect of the proposal.

We are adopting, substantially as proposed, final rules that require Commission action before a Regulation A offering statement may be qualified. The final rules modify the proposed rules by permitting the offering statements to be declared qualified by a ''notice of qualification'' issued by the Division of Corporation Finance, pursuant to delegated authority, rather than requiring the Commission itself to issue an order.[531] The notice of qualification is analogous to a notice of effectiveness in registered offerings.[532] We are therefore amending the Commission's organization rules, as they relate to the delegated authority of the Director of the Division of Corporation Finance, to permit the Division to issue qualification orders pursuant to Regulation A.[533] The final rules also eliminate the risk that an issuer may exclude a delaying notation either in error or in an effort to become qualified automatically without review and comment by the Commission staff. Given the electronic filing processes we are adopting,[534] the scaled disclosure requirements for Tier 1 and Tier 2 offerings,[535] and the preemption of state securities law registration and qualification requirements for Tier 2 offerings,[536] we believe it is appropriate to ensure that the Commission staff has the opportunity to review and comment on an offering statement before it becomes qualified.

D. Solicitation of Interest (Testing the Waters)

1. Proposed Rules

Under Securities Act Section 3(b)(2)(E), issuers may test the waters for interest in an offering—without restriction as to the types of investors solicited—before filing an offering statement on such terms and conditions as the Commission prescribes. We proposed to permit issuers to use testing the waters solicitation materials both before and after the offering statement is filed, subject to issuer compliance with the rules on filing of solicitation materials and disclaimers.[537] As we noted in the Proposing Release, the investor protections with respect to solicitation materials in existing Regulation A would remain in place as these materials remain subject to the antifraud and other civil liability provisions of the federal securities laws.[538] As proposed, testing the waters materials used by an issuer or its intermediaries after publicly filing an offering statement would be required to include a current preliminary offering circular or contain a notice informing potential investors where and how the most current preliminary offering circular can be obtained. We further proposed to require issuers to publicly file their offering statements not later than 21 calendar days before qualification so that any solicitation made in the 21 calendar days before the earliest date of potential sales of securities would be conducted using the most recent version of the preliminary offering circular. The proposed rules would amend the requirements for submission or filing of solicitation materials, so that such material would be submitted or filed as an exhibit when the offering statement is either submitted for non-public review or filed (and updated for substantive changes in such material after the initial non-public submission or filing) but would no longer be required to be submitted at or before the time of first use.

As proposed, Rule 255(b) would require all soliciting materials to bear certain legends or disclaimers.[539] Further, we did not propose to limit testing the waters to QIBs and institutional accredited investors (as is currently the case with testing the waters by emerging growth companies under Securities Act Section 5(d)).

2. Comments on Proposed Rules

Most commenters generally supported the proposed amendments to the testing the waters provisions.[540] Several commenters, however, recommended requiring the filing of testing the waters materials prior to first use.[541] These commenters suggested that the antifraud and other civil liability provisions of the federal securities laws are not an adequate substitute for the investor protections afforded by an advance filing requirement for solicitation materials. They further suggested that their concerns about the proposed testing the waters provisions are compounded by an access equals delivery model of final offering circular delivery. One commenter recommended allowing states to have immediate access to all testing the waters materials filed with the Commission.[542] Another commenter recommended making the filing of testing the waters materials a condition to the exemption,[543] while a third commenter specifically opposed that recommendation.[544]

[525] Rule 253(g)(4).

[526] 17 CFR 230.252(g)(2) (2014).

[527] *Id.*

[528] 17 CFR 230.252(g)(3) (2014).

[529] 17 CFR 230.252(g)(1) (2014).

[530] CFA Letter; CFA Institute Letter; MCS Letter.

[531] *See* Rule 252(e).

[532] *See* 17 CFR 200.30–1(a)(5) (The Director of the Division of Corporation Finance has the delegated authority to declare registration statements to be effective within shorter periods of time than 20 days after filing, consistent with Section 8(a) of the Securities Act (15 U.S.C. 77h).

[533] Rule 30–1(b)(2)–(4).

[534] *See* discussion in Section II.C.1. above.

[535] *See* discussion in Section II.C.3.b. above.

[536] *See* discussion in Section II.H.3. below.

[537] This timing is similar to the ''testing the waters'' permitted for emerging growth companies under new Section 5(d) of the Securities Act, added by the JOBS Act, which can also be conducted both before and after filing of a registration statement. Under Section 5(d), no legending or disclaimers are required, but testing the waters is limited to potential investors that are ''qualified institutional buyers'' or institutional ''accredited investors.''

[538] The Commission's antifraud liability provisions in Section 17 of the Securities Act, 15 U.S.C. 77q, apply to any person who commits fraud in connection with the offer or sale of securities. Section 3(b)(2)(D) of the Securities Act, 15 U.S.C. 77c(b)(2)(D), states that the civil liability provisions of Section 12(a)(2) apply to any person offering or selling securities under Regulation A. *See also* Rel. No. 33–6924, at fn. 48.

[539] Proposed Rule 255(b). As proposed, Rule 255(b) would largely follow similar provisions in the context of registered offerings. *See* Rule 134(d), 17 CFR 230.134(d) (requiring a disclaimer for solicitations of interest in registered offerings).

[540] BIO Letter; Letter from Daniel McElroy, DuMoulin Black LLP, April 1, 2014 (''DuMoulin Letter''); Ladd Letter 2; Paul Hastings Letter; Richardson Patel Letter.

[541] Massachusetts Letter 2; NASAA Letter 2; WDFI Letter.

[542] Ladd Letter 2.

[543] MCS Letter.

[544] BIO Letter.

Two commenters recommended ensuring that any testing the waters materials that are filed with the Commission be kept confidential, at least until the offering statement is qualified.[545] One commenter recommended removing any requirement to file testing the waters materials publicly,[546] while another commenter recommended not requiring testing the waters materials to be filed for Tier 2 offerings.[547] One commenter supported the use of legends on testing the waters materials or, in lieu of legends, restricting testing the waters to certain types of investors, such as QIBs and accredited investors.[548]

Several commenters suggested that the Commission provide market participants with communication safe harbors from Section 12(a)(2) liability for regular business communications by a Regulation A issuer.[549]

3. Final Rules

We are adopting testing the waters provisions in the final rules as proposed. Under the final rules, issuers will be permitted to test the waters with all potential investors and use solicitation materials both before and after the offering statement is filed, subject to issuer compliance with the rules on filing and disclaimers.[550]

The final rules require, as proposed, that testing the waters materials used by an issuer or its intermediaries after the issuer publicly files an offering statement be accompanied by a current preliminary offering circular or contain a notice informing potential investors where and how the most current preliminary offering circular can be obtained.[551] This requirement may be satisfied by providing the URL where the preliminary offering circular or the offering statement may be obtained. Solicitation materials will remain subject to the antifraud and other civil liability provisions of the federal securities laws.[552] Further, the final rules require issuers and intermediaries that use testing the waters materials after publicly filing the offering statement to update and redistribute such material in a substantially similar manner as such materials were originally distributed to the extent that either the material itself or the preliminary offering circular attached thereafter becomes inadequate or inaccurate in any material respect.[553]

As discussed in Section II.C.2. above, first-time issuers that are eligible for, and elect to, non-publicly submit draft offering statements are required to publicly file their offering statements not later than 21 calendar days before qualification so that any solicitation of interest made in the 21 calendar days before the earliest date of potential sales of securities by such issuers will be conducted while potential investors have access to the most recent version of the preliminary offering circular. Additionally, in light of the preemption of state securities laws registration requirements in the final rules for Tier 2 offerings, the 21 calendar day requirement will enable state securities regulators to require such issuers to file such materials with them for a minimum of 21 calendar days before any potential sales to investors in their respective states.[554]

As proposed, the final rules require that issuers submit or file solicitation materials as an exhibit when the offering statement is either submitted for non-public review or filed (and update for substantive changes in such material after the initial non-public submission or filing). However, issuers are no longer required to submit solicitation materials at or before the time of first use.[555] The treatment of solicitation materials in Regulation A offerings is generally consistent with the Commission staff's treatment of solicitation materials used by emerging growth companies under Securities Act Section 5(d), with two exceptions that we believe will provide investors in Regulation A offerings with additional protections:

- Solicitation materials used in Regulation A offerings are required to be included with the offering statement;[556] and
- solicitation materials used by Regulation A issuers that file an offering statement with the Commission will be publicly available as a matter of course.

Contrary to the views of commenters that suggested we keep solicitation materials confidential, or not require such materials to be filed (either publicly or at all), we believe the submission and filing requirements for solicitation materials are important elements of the final rules for the use of solicitation materials.[557] We believe that issuers should be accountable for the content of solicitation materials and that such information must be consistent with the information contained in the offering circular. We believe that making these materials publicly available as an exhibit to the offering statement, and thereby subjecting them to staff review and comment and scrutiny by the public, will help ensure that issuers use solicitation materials with appropriate caution. However, for the reasons discussed in Section II.F. below, we do not believe that the filing of such materials should be a condition to relying on the Regulation A exemption.

We are adopting as proposed the required legends for solicitation materials. The legends provide that sales made pursuant to Regulation A are contingent upon the qualification of the offering statement.[558] Additionally, to provide greater flexibility when using solicitation materials, the final rules eliminate, as proposed, the requirement in existing Regulation A for testing the waters materials to identify the issuer's chief executive officer, business, and products. Solicitation materials used before qualification will, therefore, be required to bear a legend or disclaimer indicating that: (1) No money or other consideration is being solicited, and if sent, will not be accepted; (2) no sales will be made or commitments to purchase accepted until the offering statement is qualified; and (3) a prospective purchaser's indication of interest is non-binding.[559] While the expansion of use of solicitation materials after filing may result in investors receiving more sales literature in marketed offerings, in such circumstances, potential investors will also be afforded more time with the preliminary offering circular before making an investment decision because, as noted above, testing the waters materials used by an issuer or its intermediaries after the issuer publicly

[545] Heritage Letter; Ladd Letter 2.

[546] BIO Letter.

[547] MoFo Letter.

[548] CFA Institute Letter.

[549] ABA BLS Letter; Canaccord Letter; CFIRA Letter 1; CFIRA Letter 2; MoFo Letter; Public Startup Co. Letter 6; WR Hambrecht + Co Letter. *See also* discussion of Section 12(a)(2) liability in Proposing Release, Section II.B.7.

[550] Rule 255. For a discussion of the use of solicitation materials as it relates to (i) the doctrine of integration, *see* Section II.B.5.c. above and Rule 255(e), and (ii) the application of state securities laws, *see* Section II.H.3. below.

[551] Rule 255(b)(4).

[552] *See* fn. 538 above.

[553] Issuers would not, however, be required to update and redistribute solicitation materials to the extent that: (i) Any such changes occur only with respect to the preliminary offering circular, (ii) no similar changes are required in the solicitation materials previously relied upon, and (iii) such materials included (when originally distributed) a URL where the preliminary offering circular or the offering statement may be obtained and that URL continues to link to the most recent version of the preliminary offering circular. *See* Rule 255(d).

[554] *See* fn. 277 above.

[555] Rule 255.

[556] *See* Item 17 (Exhibits), Part III of Form 1–A.

[557] BIO Letter; Heritage Letter; Ladd Letter 2; MoFo Letter.

[558] *See* Rule 255(a).

[559] *See* Rule 255(b).

files an offering statement must be accompanied by a current preliminary offering circular or contain a notice informing potential investors where and how the most current preliminary offering circular can be obtained.[560]

We believe the approach to solicitation materials that we are adopting today is consistent with existing Regulation A that allows issuers to test the waters and will make the use of solicitation materials more beneficial for issuers and investors. For issuers, the final rules will generally reduce compliance burdens and entirely eliminate the filing requirement for issuers that, after testing the waters, decide not to proceed with an offering. With respect to investors, we note that the final rules contain significant safeguards that should help mitigate the concerns expressed by some commenters that not requiring testing the waters materials to be submitted or filed with the Commission before first use will result in a reduction in investor protections.[561] These include the requirements to make the most recent preliminary offering circular available with solicitation materials after filing, to redistribute solicitation materials after filing to the extent that either the material itself or the preliminary offering circular attached thereafter becomes inadequate or inaccurate in any material respect, to deliver the preliminary offering circular at least 48 hours in advance of sale if the issuer is not subject to a Tier 2 reporting obligation, to deliver the final offering circular (or a notice of the final offering circular) no later than two business days after sale in all instances, and the minimum 21 calendar day filing requirement for issuers that non-publicly submit draft offering statements as well as the continued application of the antifraud provisions of the federal securities laws. Additionally, state securities regulators have the ability under the final rules to require issuers to file with them any materials required to be filed with the Commission.[562] From an investor protection standpoint, we also note that sales under Regulation A may occur only in connection with a qualified offering statement that is filed with the Commission and that is subject to review by the staff.

Lastly, to address the concerns of commenters regarding an issuers' ability to conduct routine communications with customers and suppliers at or near the time of a contemplated Regulation A offering,[563] we are confirming, consistent with Rule 169's existing exemption from Sections 2(a)(10) and 5(c) of the Securities Act for regularly released factual business communications,[564] that we do not believe such communications constitute solicitation of interest materials under Regulation A. Ultimately, whether or not a communication is limited to factual business information depends on the facts and circumstances, but issuers may generally look to the provisions of Rule 169 for guidance in making this determination in the Regulation A context. More generally, we note that factual business information means information about the issuer, its business, financial condition, products, services, or advertisement of such products or services.[565] Factual business information generally does not include such things as predictions, projections, forecasts, or opinions with respect to valuation of a security.[566] The approach we are taking today with respect to factual business information is consistent with the Commission's stated position on such communications for registered offerings and clarifies its application to Regulation A solicitation of interest materials.

E. Ongoing Reporting

Section 3(b)(2) of the Securities Act requires issuers to provide annual audited financial information on an ongoing basis and expressly provides that the Commission may consider whether additional ongoing reporting should be required. Specifically, Section 3(b)(4) grants the Commission authority to require issuers ''to make available to investors and file with the Commission periodic disclosures regarding the issuer, its business operations, its financial condition, its corporate governance principles, its use of investor funds, and other appropriate matters, and also may provide for the suspension and termination of such a requirement with respect to that issuer.''

As we noted in the Proposing Release, we are mindful that a one-size-fits-all ongoing reporting regime may not be suitable for all types of entities and investors.[567] In the final rules for Regulation A, we have endeavored to achieve an appropriate balance between the costs and benefits associated with the provision of ongoing information about issuers of Regulation A securities to investors in such securities and any market that develops.

1. Continuing Disclosure Obligations

a. Proposed Rules for Continuing Disclosure Obligations

Regulation A currently requires issuers to file a Form 2–A with the Commission to report sales and the termination of sales made under Regulation A every six months after qualification and within 30 calendar days after the termination, completion, or final sale of securities in the offering.[568] We proposed to rescind Form 2–A, but to continue to require Regulation A issuers to file with the Commission electronically on EDGAR after the termination or completion of the offering the information generally disclosed in Form 2–A.[569] As proposed, issuers conducting Tier 1 offerings would be required to provide this information on Part I of proposed Form 1–Z not later than 30 calendar days after termination or completion of the offering,[570] while issuers conducting Tier 2 offerings have the flexibility to provide this information on either Part I of Form 1–Z at the time of filing an exit report or proposed Form 1–K as part of their annual report, whichever is filed first.[571]

As proposed, Tier 2 issuers would be subject to a Regulation A ongoing reporting regime that would require, in addition to annual reports and summary information about a recently completed offering, semiannual reports on proposed Form 1–SA, current event reports on proposed Form 1–U, and, when eligible and electing to do so, notice to the Commission of the suspension of ongoing reporting

[560] *Cf.* The Regulation of Securities Offerings, Rel. No. 33–7606A, at 78 (Nov. 17, 1998) [63 FR 67174] (discussing the importance of providing a preliminary prospectus in conjunction with the distribution of sales materials).

[561] *See* fn. 541 above.

[562] *See also* fn. 277 above and discussion in Section II.H. below. Where states elect to require issuers to file such information with them, their respective securities regulators will, for example, have access to solicitation materials relied upon by first-time issuers that non-publicly submit draft offering statements for a minimum of 21 calendar days before the first date of any potential sales.

[563] *See* fn. 549 above

[564] 17 CFR 230.169.

[565] *See* Rel. No. 33–5180 (Aug. 20, 1971) (Guidelines for Release of Information by Issuers Whose Securities are in Registration).

[566] *Id.*

[567] *See* Proposing Release, at Section II.E.

[568] *See* 17 CFR 230.257 (2014); *see also* 17 CFR 239.91 (Form 2–A).

[569] We did not propose to continue to require issuers to disclose the use of proceeds currently disclosed in Form 2–A, as issuers would already have to disclose this information in Part II of proposed Form 1–A and changes in the use of proceeds after qualification not previously disclosed may require issuers to file a post-qualification amendment or offering circular supplement to update such disclosure. *See* discussion of continuous or delayed offerings and offering circular supplements in Section II.C.4. above.

[570] Proposed Form 1–Z (exit report) is discussed in Section II.E.4. below.

[571] Proposed Rule 257(a), (b)(1).

obligations on Part II of proposed Form 1–Z. All of these reports would be filed electronically on EDGAR.

b. Comments on the Proposed Rules

We received both general comments and specific comments on the proposed forms. These comments are discussed in turn below.

General Comments

Commenters generally approved of the continuing disclosure obligations for Tier 2 offerings.[572] One commenter noted favorably that professional fees, other costs, and the time burden associated with the proposed rules would likely be substantially lower for Regulation A issuers than for issuers subject to Exchange Act reporting.[573] Another commenter remarked that the proposed ongoing reporting regime strikes an appropriate balance between the benefits of disclosure and costs to issuers.[574]

Other commenters expressed general support, but also recommended changes to the semiannual reporting requirement or the content of Form 1–U.[575] One commenter supported the general policy that it should not be easier or harder to exit the Regulation A reporting system than it would be to exit the Exchange Act reporting system.[576] Several commenters recommended including an ongoing disclosure requirement for Tier 1 issuers, including disclosure at a level lower than what was proposed for Tier 2,[577] ongoing disclosure with yearly audited financials,[578] or some unspecified continuous disclosure obligation.[579] Another commenter recommended extending continuing disclosure obligations into Tier 1, but further suggested that the Commission replace any requirement to provide audited financial statements with an affidavit from management attesting to the accuracy of the financial statements.[580] A few commenters generally recommended reducing the disclosure burden on Tier 2 issuers.[581] One of these commenters recommended making continuing disclosure requirements contingent upon factors other than offering size, such as whether the issuer has taken steps to foster a market in its securities.[582] This commenter also recommended allowing issuers to either avoid ongoing reporting or to file only financial statements and a management letter regarding operations and results if, shortly after commencing the offering upon qualification, issuers have less than 300 record holders. Another commenter recommended allowing Canadian companies to rely on Rule 12g3–2(b) to avoid having to file ongoing reports under Regulation A.[583] As an alternative, this commenter recommended allowing Canadian companies to furnish reports under cover of Form 6–K rather than using the Regulation A reports. One commenter recommended that, to the extent that the final rules allow foreign private issuers to use Regulation A, such issuers should be permitted to follow the ongoing reporting rules applicable to them in the Exchange Act context in lieu of Regulation A ongoing reporting requirements,[584] while another commenter specifically opposed this suggestion.[585] Another commenter recommended requiring officers, directors, and controlling shareholders of companies that offer securities under Regulation A to make ongoing disclosure of transactions in company securities, similar to reporting on Forms 3, 4, and 5 and Schedules 13D, 13G, and 13F in the registered context.[586]

Comments on Form 1–K

One commenter recommended revising proposed Form 1–K to expressly not require the disclosure of an issuer's plan of operations, as described in Item 9(c) of Part II of Form 1–A.[587] This commenter further recommended clarifying whether a Tier 2 issuer is required to comply with Rules 3–10, 3–16, and 8–04 of Regulation S–X in Form 1–K, in light of the reference to segmented data in Item 7(b) to Part F/S of proposed Form 1–A.[588] This same commenter recommended that the Commission clarify whether a Tier 2 issuer is required to comply with Rule 8–04 of Regulation S–X in proposed Form 1–K, particularly with respect to probable acquisitions.[589]

Comments on Form 1–SA

Several commenters recommended requiring or permitting quarterly reporting rather than semiannual reporting on proposed Form 1–SA.[590] One of these commenters stated that quarterly reporting is standard in the United States and is not overly burdensome.[591] Two other commenters stated that quarterly reporting was necessary for investor protection and to reduce the risk of insider trading.[592] Other commenters noted that quarterly reporting might be preferred by market participants but supported a semiannual requirement.[593]

One commenter agreed with our proposal not to require Tier 2 issuers to have their Form 1–SA financial statements reviewed by an independent accountant, particularly with respect to smaller issuers.[594] Another commenter recommended either requiring the financial statements in Form 1–SA to be reviewed by an independent accountant or requiring issuers to disclose on Form 1–SA that the financial statements were not subject to review.[595] Yet another commenter recommended that there be no requirement to provide Rule 3–16 of Regulation S–X financial statements or summarized financial information in semiannual reports (to align with requirements for existing registrants that are not required to include this in Form 10–Q).[596] This commenter also recommended clarifying if the financial statements in Form 1–SA can be presented using a condensed format consistent with Rule 8–03(a) of Regulation S–X and if additional disclosure requirements of Rule 8–03(b) are applicable.[597] This same commenter recommended removing Item 3(d) of Form 1–SA, because neither this statement nor a statement of changes in stockholders' equity is an existing requirement on Form 10–Q.[598]

[572] ABA BLS Letter; Campbell Letter; Canaccord Letter; CFA Letter; McCarter & English Letter; NASAA Letter 2; Letter from Jason Coombs, Co-Founder and CEO, Public Startup Company, Inc., March 26, 2014 (''Public Startup Co. Letter 5''); US Alliance Corp. Letter; WDFI Letter.

[573] US Alliance Corp. Letter.

[574] McCarter & English Letter.

[575] ABA BLS Letter; Canaccord Letter; NASAA Letter 2; WDFI Letter.

[576] ABA BLS Letter (raising the issue particularly with respect to ''very small issuers'' under Tier 2).

[577] Guzik Letter 1 (suggesting that Tier 1 ongoing disclosure requirements could parallel Tier 2's requirements but without the requirement for semiannual reports).

[578] Ladd Letter 2.

[579] SVB Financial Letter.

[580] Public Startup Co. Letter 5.

[581] Heritage Letter; IPA Letter (providing estimated costs of compliance for offering statement and periodic reports).

[582] Heritage Letter.

[583] DuMoulin Letter.

[584] McCarter & English Letter (noting Exchange Act Form 20–F, 40–F, Form 6–K, and ongoing home country reports).

[585] Andreessen/Cowen Letter.

[586] OTC Markets Letter.

[587] E&Y Letter (noting the Commission's intent to follow this approach, as mentioned in the Proposing Release at fn. 397).

[588] *Id.*

[589] *Id.*

[590] E&Y Letter; Massachusetts Letter 2; NASAA Letter 2; OTC Markets Letter; WDFI Letter.

[591] OTC Markets Letter.

[592] Massachusetts Letter 2; WDFI Letter.

[593] B. Riley Letter; Milken Institute Letter.

[594] ABA BLS Letter. As proposed, such reviews would not be required for any Form 1–SA filing.

[595] KPMG Letter.

[596] E&Y Letter.

[597] *Id.*

[598] *Id.*

Comments on Form 1–U

Commenters made a number of suggestions regarding the current report requirements. Some commenters recommended eliminating the requirement to file Form 1–U for the smallest issuers, based on a measure such as asset size or market capitalization.[599] Other commenters recommended extending the proposed filing requirement from four business days after the triggering event to fifteen business days after such event.[600] Several commenters recommended changing or clarifying the ''fundamental change'' standard in Item 1 of proposed Form 1–U.[601] One of these commenters expressed concerns about whether this item will be consistently interpreted and whether the use of the term ''fundamental change,'' in light of the use of the same term in Item 512 of Regulation S–K, would cause additional confusion.[602] This commenter further recommended that, for contracts involving business acquisitions, the measurement of significance in this item should be limited to the investment test and the numerical threshold should be increased to at least 50% to be more consistent with the stated disclosure objective. Three commenters recommended moving to a materiality standard so as to be consistent with the standards in the anti-fraud provisions of federal securities laws, suggesting that this would help avoid confusion.[603] One commenter recommended allowing (but not requiring) Tier 1 issuers to report material information on Form 1–U, including the financial statements of significant acquired businesses.[604]

Other commenters suggested changes to the substance of what would need to be reported on Form 1–U. One commenter generally recommended cross-referencing existing disclosure requirements when a proposed disclosure standard is meant to be the same.[605] For example, this commenter suggested that Form 1–U include a cross-reference to Form 8–K when disclosure requirements are meant to be the same. One commenter recommended permitting companies to disclose: (1) A change in accountants in the next periodic filing instead of reporting it on Form 1–U if the change does not involve a disagreement or reportable event (as defined in Item 304 of Regulation S–K); and (2) sales of equity securities in the next periodic filing if the price was not below that of previous primary offerings.[606] Two of these commenters recommended eliminating the requirement to report unregistered sales of securities on Form 1–U, or to raise the reporting threshold to only cover offerings that represent at least 10% of the issuer's pre-transaction outstanding shares.[607]

c. Final Rules for Continuing Disclosure Obligations

We are adopting rules for continuing disclosure obligations under Regulation A generally as proposed, with certain technical modifications and clarifications. The final rules eliminate Form 2–A and in its place require the disclosure of similar information pursuant to Part I of Form 1–Z for Tier 1 issuers and, depending on when the issuer's offering is terminated or completed, in either Form 1–K or Part I of Form 1–Z for Tier 2 issuers. As proposed, the respective disclosure requirements in Part I of Forms 1–K and 1–Z will include the date the offering was qualified and commenced, the amount of securities qualified, the amount of securities sold in the offering, the price of the securities, the portions of the offering that were sold on behalf of the issuer and any selling securityholders, any fees associated with the offering, and the net proceeds to the issuer.[608] We believe that summary information and data about an issuer and its Regulation A offering is most valuable when obtained after the offering is completed or terminated.[609] Therefore, as proposed, issuers will only be required to disclose such information after the termination or completion of the offering.

As noted in the Proposing Release, we are concerned that uniform ongoing reporting requirements for all issuers of Regulation A securities could disproportionately affect issuers in smaller offerings. For that reason, the final rules do not require any ongoing reporting for issuers conducting Tier 1 offerings, other than the disclosure of the summary information discussed above.[610] Issuers in smaller offerings will, however, have the option to conduct a Tier 2 offering and subject themselves to ongoing reporting and other Tier 2 requirements.[611]

The final rules for ongoing reporting for Tier 2 issuers are being adopted as proposed, except where noted below, and will require issuers to file annual reports on Form 1–K,[612] file semiannual reports on Form 1–SA,[613] file current event reports on Form 1–U,[614] and provide notice to the Commission of the suspension of their ongoing reporting obligations on Part II of Form 1–Z.[615] All reports for Tier 1 and Tier 2 offerings are required to be filed electronically on EDGAR.[616]

As discussed above, commenters suggested that the Commission consider various potential changes to the proposed ongoing reporting requirements for Tier 2 issuers, including: Extending ongoing reporting to Tier 1 offerings with some modifications; increasing the ongoing reporting requirements for Tier 2 issuers to include analogs to Exchange Act Forms 3, 4, and 5 and beneficial ownership reporting on Schedules 13D, 13G and 13F; basing the ongoing reporting requirements on characteristics of the issuer, such as whether the issuer has taken steps to foster a secondary market; or providing different requirements for Canadian companies or foreign private issuers. Another commenter suggested that we allow issuers to either avoid ongoing reporting or to file only financial statements and a management letter regarding operations and results if, shortly after commencing the offering upon qualification, issuers have less than 300 record holders.[617]

We do not, however, believe that the changes suggested by commenters

[599] ABA BLS Letter; Milken Institute Letter.

[600] ABA BLS Letter; E&Y Letter; Milken Institute Letter.

[601] E&Y Letter; Massachusetts Letter 2; NASAA Letter 2; WDFI Letter.

[602] E&Y Letter. For description of Item 512, see fn. 486 above.

[603] Massachusetts Letter 2; NASAA Letter 2; WDFI Letter.

[604] E&Y Letter. Two commenters made a similar recommendation without specifying which form should be used for that purpose. *See* ABA BLS Letter; Canaccord Letter.

[605] PwC Letter.

[606] E&Y Letter.

[607] ABA BLS Letter; MoFo Letter.

[608] *See* Part I of Form 1–K *and* Part I of Form 1–Z. For clarification purposes, we have changed the references in Part I in these forms from ''number of securities'' to ''amount of securities.'' These changes should avoid confusion when reporting debt offerings where a quantifiable number of securities is not being offered. In such cases, issuers will be able to report the aggregate sales of securities in the offering.

[609] Additionally, in continuous offerings, issuers are required to file post-qualification amendments with the Commission every twelve months to the extent that sales are ongoing at that time. *See* Rule 252(f)(2)(i).

[610] *See* Rule 257(a).

[611] An issuer offering up to $20 million in a Tier 2 offering would, in addition to providing ongoing reports to the Commission on an annual and semiannual basis, with interim current event updates, be required to file audited financial statements in the offering statement, just as issuers in larger Tier 2 offerings are required to do. *See* Section II.C.3.b(2)(c). above.

[612] Rule 257(b)(1).

[613] Rule 257(b)(3).

[614] Rule 257(b)(4).

[615] Rule 257(d)(2).

[616] Subject, in certain cases, to the hardship exemptions set forth in Rules 201 and 202 of Regulation S–T. 17 CFR 232.201–202.

[617] Heritage Letter.

described above are advisable at this time. Instead, we believe the approach to ongoing reporting adopted in the final rules is preferable and will support a regular flow of information about issuers conducting Tier 2 offerings, which will benefit investors in these larger offerings and also help foster the development of a secondary market in such securities, while balancing the compliance burden that would be imposed on smaller issuers. We do not believe that requiring ongoing reporting for Tier 1 issuers, other than the requirement to file a Form 1–Z upon completion or termination of the offering, is necessary for Tier 1 offerings. We believe issuers in Tier 1 offerings will be small companies whose businesses revolve around products, services, and a customer base that will likely be more local in nature than issuers in Tier 2 offerings.[618] Further, we believe Tier 1 offerings will be conducted by issuers that are unlikely to seek the creation of a secondary trading market in their securities.[619] In light of this, we do not believe that it is necessary to require ongoing reporting for Tier 1 issuers. Consistent with our experience under existing Regulation A, we do not believe that a lack of ongoing reporting for issuers in Tier 1 offerings will adversely affect investors that base purchasing decisions on the narrative and financial statement disclosure requirements included in the offering statement and, with respect to continuous offerings lasting for more than one year, updated annually by post-qualification amendment thereafter. Further, notwithstanding the suggestions of some commenters,[620] we believe that adopting different ongoing reporting requirements for Canadian issuers [621] would not be consistent with our goal to adopt a uniform reporting standard for Tier 2 issuers that provides investors with certainty as to the amount of information they can expect to receive from an issuer in a Tier 2 offering on an ongoing basis. We believe that the final rules will provide investors and potential investors with the information they need to make investment decisions and facilitate capital formation for smaller companies.

We are therefore adopting the following ongoing reporting requirements for Tier 2 offerings:

(1) Annual Reports on Form 1–K

As proposed and adopted, Form 1–K will consist of two parts: Part I (Notification) and Part II (Information to be included in the report). The contents of and requirements for Part I and Part II are, with the exception of technical amendments to the forms, amendments that are necessary to reflect corresponding changes to the required audit standards of financial statements filed under Part F/S of Form 1–A, and additional guidance designed to streamline disclosure, adopted without changes from the proposed rules.

(a) Part I (Notification)

As adopted, Part I of Form 1–K will be an online XML-based fillable form that will include certain basic information about the issuer, prepopulated on the basis of information previously disclosed in Part I of Form 1–A, which can be updated by the issuer at the time of filing. Additionally, if at the time of filing the Form 1–K an issuer has terminated or completed a qualified Regulation A offering, the issuer will be required to provide certain updated summary information about itself and such offering in Part I, including the date the offering was qualified and commenced, the amount of securities qualified, the amount of securities sold in the offering, the price of the securities, the portions of the offering that were sold on behalf of the issuer and any selling securityholders, any fees associated with the offering, and the net proceeds to the issuer.

As proposed and adopted, issuers will only be required to fill out the XML-based portion of Part I of Form 1–K that relates to the summary information about a terminated or completed offering once per offering. An issuer that elects to terminate its ongoing reporting obligation under Tier 2 of Regulation A after terminating or completing an offering, in a fiscal year other than the fiscal year in which the offering statement was qualified, but before reporting the required summary information on Form 1–K, will be required to file the summary offering information in Part I of Form 1–K by filing a Form 1–Z (exit report) that includes such information.[622]

The summary information disclosed will facilitate analysis of Regulation A offerings by the Commission, other regulators, third-party data providers, and market participants and thereby enable the Commission and others to evaluate the use and effectiveness of Regulation A as a capital formation tool.[623] The fillable form will enable issuers to provide the required information in a convenient medium and capture relevant data about the recently terminated or completed Regulation A offering. The required disclosure will be publicly available on EDGAR. Consistent with Part I of Form 1–A, the issuer will not be required to obtain specialty software to file Part I of Form 1–K on EDGAR.

(b) Part II (Information To Be Included in the Report)

As with Part II of Form 1–A, the final rules require that the issuer submit Part II of Form 1–K electronically as a text file attachment containing the body of the disclosure document and financial statements, formatted to be compatible with the EDGAR filing system. Part II will require issuers to disclose information about themselves and their business based on the financial statement and narrative disclosure requirements of Form 1–A.[624]

As adopted, Item 2 to Part II of Form 1–K (Management's Discussion and Analysis of Financial Condition and Results of Operation) requires issuers, by cross-reference to the requirements of Form 1–A, to provide information for the two most recently completed fiscal years. As suggested by one commenter,[625] we are clarifying that the Form 1–K cross-reference to the requirements of Item 9 to Part II of Form 1–A does not require issuers to include the additional MD&A disclosure required in Item 9(c) for issuers that have not received revenue from operations during each of the three fiscal years immediately before the filing of the offering statement (or since inception, whichever is shorter).[626]

Additionally, we are revising the financial statement requirements in Item 7 to Part II of Form 1–K. As proposed, Form 1–K directed issuers to the financial statement requirements of Part F/S of Form 1–A. We are revising this portion of the form so as to include the financial statement requirements directly in Item 7 to Part II of Form 1–K. We believe this change to Item 7 will make it easier for issuers to comply by clarifying, as one commenter recommended,[627] the specific portions of Regulation S–X relating to financial

[618] *See* fn. 830 in Section II.H.3. below.

[619] *See* discussion of the nature of offerings in Section II.H.3. below.

[620] DuMoulin Letter; *see also* McCarter & English Letter.

[621] Commenters also suggested that their proposed ongoing reporting for Canadian issuers apply to foreign private issuers. As noted above in Section II.B.1.c., however, non-Canadian foreign issuers are not eligible under Regulation A.

[622] General Instruction (3) to Form 1–Z.

[623] *See also* discussion in Section II.E.4. below.

[624] Part II of Form 1–K.

[625] E&Y Letter.

[626] *See* Item 2 to Part II of Form 1–K.

[627] E&Y Letter.

statements for entities other than the issuer that are required in Form 1–K. Additionally, since Tier 2 issuers are now permitted to file financial statements that are audited in accordance with either U.S. GAAS or the standards of the PCAOB, a corresponding change has been made to the financial statement requirements of Item 7 of Form 1–K.[628] As proposed, the auditor of financial statements would need to be independent under Rule 2–01 of Regulation S–X and must comply with the other requirements of Article 2 of Regulation S–X, but need not be PCAOB-registered. Further, in comparison to the proposed rules, Item 7(a) no longer requires issuers to provide a list of the financial statements included in Form 1–K at the beginning of the financial statement section. We eliminated this requirement in the final rules because we do not believe that there is a need for a separate list of the financial statements at the beginning of this section, when the financial statements themselves will be labeled.

Form 1–K will permit issuers to incorporate by reference certain information previously filed on EDGAR, but will require issuers to include a hyperlink to such material on EDGAR.[629] In a change from the proposed rules, the final rules do not limit the availability of incorporation by reference to information previously filed pursuant to Regulation A. We believe that this change will facilitate the provision of required information to investors, while taking a consistent approach to information previously provided to the Commission and publicly available on EDGAR. Additionally, to avoid unnecessary repetition of disclosure items, Form 1–K encourages issuers to cross-reference items within the form, where applicable.[630] Further, in order to avoid incorporation by reference to stale information without requiring the latest version of the document to be filed, Form 1–K indicates that, if any substantive modification has occurred in the text of any document incorporated by reference since such document was filed, the issuer must file with the reference a statement containing the text and date of such modification.[631] Form 1–K will cover:

- Business operations of the issuer for the prior three fiscal years (or, if in existence for less than three years, since inception);
- Transactions with related persons, promoters, and certain control persons;
- Beneficial ownership of voting securities by executive officers, directors, and 10% owners;
- Identities of directors, executive officers, and significant employees, with a description of their business experience and involvement in certain legal proceedings;
- Executive compensation data for the most recent fiscal year for the three highest paid executive officers or directors;
- MD&A of the issuer's liquidity, capital resources, and results of operations covering the two most recently completed fiscal years; and
- Two years of audited financial statements.[632]

We anticipate that issuers will generally be able to use the offering materials as a basis to prepare their ongoing disclosure.

As adopted in the final rules, Form 1–K includes requirements for financial statements prepared on the same basis, and subject to the same requirements as to audit standards and auditor independence, as the financial statements required in the Regulation A offering circular for Tier 2 offerings.[633] Form 1–K must be filed within 120 calendar days after the issuer's fiscal year end.[634] A manually signed copy of the Form 1–K must be executed by the issuer and related signatories before or at the time of filing and retained by the issuer for a period of five years.[635] Issuers will be required to produce the manually signed copy to the Commission, upon request.[636] Any amendments to the form must comply with the requirements of the applicable items and be filed under cover of Form 1–K/A.[637]

(2) Semiannual Reports on Form 1–SA

We are adopting final rules for semiannual interim reporting for Regulation A issuers generally as proposed, with technical amendments and additional guidance designed to streamline the disclosure requirements for Tier 2 issuers and harmonize them with the requirements of issuers subject to an ongoing reporting obligation under the Exchange Act.[638] As proposed, we continue to believe that a semiannual, rather than a quarterly, reporting requirement strikes an appropriate balance between the need to provide information to the market and the cost of compliance for smaller issuers, especially given the further flexibility provided to issuers in Form 1–U to provide quarterly information if they elect to do so.[639] Issuers will be required to provide semiannual reports on Form 1–SA that, much like reports on Form 10–Q, consist primarily of financial statements and MD&A.[640] Unlike Form 10–Q, however, Form 1–SA does not require disclosure about quantitative and qualitative market risk, controls and procedures, updates to risk factors, or defaults on senior securities.[641] We do not believe such disclosure is necessary for ongoing reports under Regulation A, as we believe such disclosure is not applicable to, or appropriately tailored for, the types of issuers likely to conduct Regulation A offerings.

Consistent with the technical, specialized suggestions of several commenters,[642] we are including provisions in Form 1–SA that will help issuers comply with the form requirements, eliminate potential confusion over such requirements, and streamline and harmonize disclosure to make the requirements for Tier 2 issuers no more onerous than, and consistent with, the ongoing disclosures required of smaller reporting companies under the Exchange Act. Specifically, the final rules:

- Add clarifying language to Item 1 (Management Discussion and Analysis of Financial Condition and Results of Operations) of Form 1–SA to indicate that compliance with this disclosure requirement only applies to the interim financial statements required by Item 3 to Form 1–SA and that, similar to our clarification of Form 1–K's requirements, issuers are not required to

[628] *See* discussion in Section II.C.3.b(2)(c). above.

[629] General Instruction D. to Form 1–K. The hyperlink to EDGAR need only be active at the time of filing of the Form 1–K. *Cf.* Securities Act Rule 411(c) and Exchange Act Rule 12b–32.

[630] *Id.* Issuers may, for example, add a cross-reference to disclosure in the financial statements. We have clarified, however, that like with Form 1–A, they may not add a cross-reference within the financial statements themselves to disclosures elsewhere.

[631] *Id.*

[632] Part II of Form 1–K.

[633] *See* Item 7 (Financial Statements), Part II of Form 1–K.

[634] *See* General Instruction A.(2), Form 1–K.

[635] *See* General Instruction C., Form 1–K.

[636] *Id.*

[637] *See* Rule 257(c) (also requiring the signature on behalf of an authorized representative of the issuer and the inclusion of any specified certifications).

[638] Rule 257(b)(3); Form 1–SA.

[639] Consistent with the suggestions of commenters, we are clarifying that issuers seeking to voluntarily report information to the market on a more frequent basis may do so under the final rules for current reporting on Form 1–U. *See* discussion in Section II.E.1.c(3). below; *see also* discussion in Section II.E.2.c. below regarding the provision of ongoing reports as it applies to Securities Act Rule 144.

[640] *See* Part I (Financial Information) of Form 10–Q, 17 CFR 249.308a.

[641] *See* Item 3 and Item 4 of Part I of Form 10–Q.

[642] *See, e.g.,* E&Y Letter; KPMG letter.

include the additional MD&A disclosure required by Item 9(c) of Form 1–A;[643]

• Update the financial statement disclosure requirements of Form 1–SA to more clearly delineate the requirements for compliance with Item 3 of Form 1–SA;

• Provide that the financial statements that must be included pursuant to Item 3 may be condensed, in addition to being unaudited, and that the financial statements are not required to be reviewed;

• Amend the final form to note that additional guidance on the presentation of financial statements and footnotes and other disclosures can be found in Rule 8–03 of Regulation S–X;[644]

• Revise the requirements of Item 3(e) of Form 1–SA to match the disclosure language contained in Rule 3–10 of Regulation S–X for smaller reporting companies;

• Delete the requirement in Item 3(d) of proposed Form 1–SA to present interim statements of changes in financial position for the period between the end of the preceding fiscal year and the end of the interim period covered by this report, and for the corresponding period of the preceding fiscal year, as this is not required of issuers under Rule 8–03 of Regulation S–X; and

• Make the ongoing reporting requirements under Item 3 of Form 1–SA more consistent with what is required of issuers subject to an ongoing reporting obligation under the Exchange Act, consistent with the suggestion of one commenter,[645] by eliminating the line item requirements of Item 3(f) and (g), as Rule 3–16 and Rule 4–10 of Regulation S–X generally do not require the disclosure of such information other than in registration statements and annual reports.

As adopted, Form 1–SA will require disclosure of updates otherwise reportable on Form 1–U. The final rules permit issuers to incorporate by reference in Form 1–SA certain information previously filed on EDGAR, but must include a hyperlink to such material on EDGAR.[646] In a change from the proposed rules, the final rules do not limit the availability of incorporation by reference to information previously filed pursuant to Regulation A. We believe that this change will continue to facilitate the provision of required information to investors, while taking a consistent approach to information previously provided to the Commission and publicly available on EDGAR. Additionally, in a change from the proposed form that seeks to avoid unnecessary repetition of disclosure items, Form 1–SA encourages issuers to cross-reference items within the form, where applicable.[647] Further, in order to avoid incorporation by reference to stale information without requiring the latest version of the document to be filed, Form 1–SA indicates that, if any substantive modification has occurred in the text of any document incorporated by reference since such document was filed, the issuer must file with the reference a statement containing the text and date of such modification.[648]

Form 1–SA must be filed within 90 calendar days after the end of the first six months of the issuer's fiscal year.[649] The first such obligation to file will commence immediately following the most recent fiscal year for which full financial statements were included in the offering statement, or, if the offering statement included financial statements for the first six months of the fiscal year following the most recent full fiscal year, for the first six months of the following fiscal year.[650] As proposed, a manually signed copy of the Form 1–SA must be executed by the issuer and related signatories before or at the time of filing, retained by the issuer for a period of five years, and produced by the issuer to the Commission, upon request.[651] The final rules require, as proposed, any amendments to the form to comply with the requirements of the applicable items and be filed under cover of Form 1–SA/A.[652]

(3) Current Reports on Form 1–U

In addition to the annual report on Form 1–K and semiannual report on Form 1–SA, the final rules require issuers to submit current reports on Form 1–U. The final rules are being adopted largely as proposed with one change and some technical amendments and additional guidance designed to ease compliance with the final rules and eliminate potential confusion as to the scope and applicability of the disclosure requirements. The final rules require issuers to submit a report on Form 1–U when it experiences one (or more) of the following events:

• Fundamental changes;[653]

• Bankruptcy or receivership;

• Material modification to the rights of securityholders;

• Changes in the issuer's certifying accountant;

• Non-reliance on previous financial statements or a related audit report or completed interim review;

• Changes in control of the issuer;

• Departure of the principal executive officer, principal financial officer, or principal accounting officer; and

• Unregistered sales of 10% or more of outstanding equity securities.

Additionally, as proposed, Item 9 of final Form 1–U contains provisions for disclosing other events not directly required of issuers in the form. As noted above in the context of suggestions by commenters to require or permit quarterly reporting by issuers,[654] issuers that elect to provide relevant information to the market on, for example, a quarterly basis may do so pursuant to Item 9 (Other Events) of Form 1–U.[655]

Notwithstanding the view of some commenters,[656] we believe that Form 1–U should be required of all Tier 2

[643] *See* Section II.F.1.c.(1)(b) above for a discussion of this clarification in Form 1–K.

[644] Tier 2 issuers are required under Part F/S of Form 1–A to provide financial statements that comply with Article 8 of Regulation S–X.

[645] E&Y Letter.

[646] General Instruction D. to Form 1–SA. The hyperlink to EDGAR need only be active at the time of filing of the Form 1–SA. *Cf.* Securities Act Rule 411(c) and Exchange Act Rule 12b–32.

[647] *Id.* Issuers may, for example, add a cross-reference to disclosure in the financial statements. We have clarified, however, that like with Form 1–A, they may not add a cross-reference within the financial statements themselves to disclosures elsewhere.

[648] *Id.*

[649] *See* General Instruction A.(2), Form 1–SA.

[650] For example, where an offering statement is filed in October 2015 and includes full financial statements for the fiscal years ended December 31, 2014 and December 31, 2013 and interim financial statements for the six months ended June 30, 2015 and June 30, 2014 and is qualified in December 2015, the Form 1–SA will not be required until within 90 days following the first six months of the following fiscal year (*i.e.,* within 90 days following June 30, 2016).

If, however, the offering statement is filed in March 2015 and qualified in June of 2015 than the first Form 1–SA would cover the six months ended June 30, 2015 and June 30, 2014 and would not be required to be filed until within 90 days following June 30, 2015.

[651] *See* General Instruction C. to Form 1–SA.

[652] *See* Rule 257(c).

[653] As discussed below, disclosure pursuant to this requirement is limited to the entry into or termination of material definitive agreements resulting in fundamental changes in the nature of an issuer's business. More generally, a fundamental change in the nature of an issuer's business includes major and substantial changes in the issuer's business or plan of operations or changes reasonably expected to result in such changes, such as significant acquisitions or dispositions, or the entry into, or termination of, a material definitive agreement that has or will result in major and substantial changes to the nature of an issuer's business or plan of operations.

[654] *See* fn. 639 and 604 above.

[655] An issuer seeking to, for example, report information that satisfies, and on a frequency that accords with, the requirements of Exchange Act Rule 15c2–11(a)(5) and (g) or Securities Act Rule 144A(d)(4) may do so pursuant to Item 9 of Form 1–U.

[656] ABA BLS Letter; Milken Institute Letter.

issuers, including smaller issuers. We believe that, on balance, the benefit of requiring a uniform base level of disclosure to investors of current event reporting for all issuers in Tier 2 offerings outweighs any potential additional compliance cost to smaller issuers. Additionally, given the inclusion of only the most significant events in the list of disclosable current events on Form 1–U, we do not anticipate that issuers, particularly smaller issuers, will on average be required to file many reports in this regard.

In a change from the proposed rules, and consistent with the suggestions of commenters,[657] the final rules increase the threshold below which an issuer need not report unregistered sales of equity securities pursuant to Item 8 of Form 1–U from 5% to 10% of the number of shares outstanding of the class of equity securities sold. We believe that this increase in the threshold below which an issuer would not be required to report such sales remains consistent with our general approach to the final rules for Form 1–U—namely, that Form 1–U should reflect the most significant or substantial events that an issuer may experience in the interim period between the filing of the required periodic reports.

We are not amending Item 1 of Form 1–U to alter the use of the term ''fundamental change,'' as suggested by some commenters.[658] We are, however, revising Instruction 2 to Item 1 to make clear that the transactions described therein are deemed to be ''fundamental changes'' solely for purposes of Item 1 of Form 1–U and should not be read to influence the definition of that term in other contexts.[659] Item 1 of Form 1–U is meant to require issuers to disclose material definitive agreements, including agreements to acquire other entities, which result or would reasonably be expected to result in fundamental changes to the nature of the issuer's business or plan of operations. As Instruction 2 to Item 1 indicates, certain transactions are deemed to involve fundamental changes, and disclosure of these transactions, as prescribed by Item 1 is required. Consistent with the suggestion of one commenter,[660] we are narrowing from the proposed rules the applicability of Instruction 2(a) so that an acquisition transaction will only result in a fundamental change for these purposes if the purchase price, as defined by U.S. GAAP and IFRS, exceeds 50% of the total consolidated assets of the issuer as of the end of the most recently completed fiscal year.[661] We believe that this is consistent with our general goal of only requiring disclosure of significant and substantial matters that may affect an issuer's business or plan of operations. We believe that this requirement is appropriately tailored for the types of issuers likely to conduct Tier 2 offerings by providing them with important flexibility as to the determination of a ''fundamental change,'' while providing clear guidance that certain transactions will always trigger disclosure under Item 1.

On a related point, we continue to believe, despite the suggestions of some commenters,[662] that a fundamental change standard for some of the disclosure requirements in Form 1–U is a more appropriately tailored standard for Tier 2 issuers than a broader materiality standard. A fundamental (as opposed to a material) change to the nature of an issuer's business includes major and substantial changes to the issuer's business or plan of operations or changes reasonably expected to result in such changes.[663] The final rules reflect our belief that, on balance, Tier 2 issuers should only be required make disclosures in Form 1–U that reflect major and substantial changes to business plans or operations, as opposed to material events that are otherwise reportable in their periodic reports. Moreover, we do not believe that a fundamental change standard will cause confusion or raise concerns as to the applicability of other standards applicable in the anti-fraud provisions of the federal securities laws.

Additionally, we note that Item 6 of Form 1–K and Item 2 of Form 1–SA permit issuers to disclose any information required to be disclosed under Form 1–U, but not so reported. For example, if an event occurs that would, under normal circumstances, require an issuer to file a Form 1–U within four business days, but such issuer is due to file either its annual or semiannual report within that period, then the issuer may instead report such information in its periodic report.

Finally, contrary to the suggestions of some commenters,[664] we continue to believe that the requirement to report unregistered sales of securities in Item 8 of Form 1–U will provide investors with valuable current information as to significant capital raising events by the issuer and should be disclosed in a timely manner to the market. We therefore retain this disclosure requirement in the final rules.[665]

As adopted, Form 1–U must be filed within four business days after the occurrence of any of the triggering events, and, where applicable, will permit issuers to incorporate by reference certain information previously filed on EDGAR.[666] Notwithstanding the suggestions of some commenters,[667] we believe that requiring issuers to file the form within four business days, as opposed to fifteen business days, is appropriate in an ongoing reporting regime that otherwise only requires issuers to provide annual and semiannual reports. Further, we are concerned that extending the filing deadline for Form 1–U reports would make the reporting of disclosable events no longer ''current.'' We are therefore adopting the timing requirements, as proposed. Additionally, in a change from the proposed rules, the final rules do not limit the availability of incorporation by reference to information previously filed pursuant to Regulation A. We believe that this change will continue to facilitate the provision of required information to investors, while taking a consistent approach to information previously provided to the Commission and publicly available on EDGAR.

Additionally, consistent with the changes made to Form 1–K and Form 1–SA and suggestions of at least one commenter,[668] Form 1–U encourages issuers to cross-reference items within the form, where applicable.[669] Further, in order to avoid incorporation by reference to stale information without requiring the latest version of the

[657] ABA Letter; MoFo Letter.

[658] *See* E&Y Letter; *see also* ABA BLS Letter; Canaccord Letter.

[659] Item 1(d) to Form 1–U.

[660] E&Y Letter.

[661] Instruction(s) 2(b)–(c) to Item 1 of Form 1–U are adopted, as proposed.

[662] E&Y Letter; Massachusetts Letter 2; NASAA Letter 2; WDFI Letter.

[663] *See* Instruction 2(a) to Item 1 for the circumstances when an acquisition transaction would be deemed to trigger a fundamental change for purposes of Form 1–U.

[664] ABA BLS Letter; MoFo Letter.

[665] Item 8 to Form 1–U. We have also clarified in Item 8(b) that only periodic reports that contain disclosure regarding unregistered sales of equity securities will reset the five percent reporting threshold for unregistered sales of securities, rather than any periodic report.

[666] General Instruction D. to Form 1–U. The hyperlink to EDGAR need only be active at the time of filing of the Form 1–U. *Cf.* Securities Act Rule 411(c) and Exchange Act Rule 12b–32.

[667] ABA BLS Letter; E&Y Letter; Milken Institute Letter.

[668] PwC Letter.

[669] General Instruction D. to Form 1–U. We have clarified, however, that like with Form 1–A, they may not add a cross-reference within any financial statements that may be included to disclosures elsewhere.

document to be filed, Form 1–U indicates that, if any substantive modification has occurred in the text of any document incorporated by reference since such document was filed, the issuer must file with the reference a statement containing the text and date of such modification.[670] A manually signed copy of the Form 1–U must be executed by the issuer and related signatories before or at the time of filing and retained by the issuer for a period of five years.[671] Issuers are required to produce the manually signed copy to the Commission, upon request.[672] Any amendments to the Form 1–U must comply with the requirements of the applicable items, and be filed under cover of Form 1–U/A.[673]

(4) Special Financial Reports on Form 1–K and Form 1–SA

We did not receive any comment on the proposed provisions for special financial reports and are adopting them as proposed with one minor clarifying change. This report serves to close lengthy gaps in financial reporting between the financial statements included in Form 1–A and the issuer's first periodic report due after qualification of the offering statement. Where applicable, issuers conducting Tier 2 offerings must provide special financial reports analogous to those required under Exchange Act Rule 15d–2.[674] The special financial report requires audited financial statements for the issuer's most recent fiscal year (or for the life of the issuer if less than a full fiscal year) to be filed not later than 120 calendar days after qualification of the offering statement if the offering statement does not include such financial statements.[675] The special financial report requires semiannual financial statements for the first six months of the issuer's fiscal year, which may be unaudited, to be filed 90 calendar days after qualification of the offering statement if the offering statement does not include such financial statements and the offering statement was qualified in the second half of the issuer's current fiscal year.[676] The special financial report must be filed under cover of Form 1–K if it includes audited year end financial statements and under cover of Form 1–SA if it includes semiannual financial statements for the first six months of the issuer's fiscal year.[677] The financial statement and auditing requirements must follow the requirements of those forms, and the issuer must indicate on the front page of the applicable form that only financial statements are included.[678]

(5) Reporting by Successor Issuers

We did not receive any comment on reporting by successor issuers, and we are adopting the proposed rules without change. Where in connection with a succession by merger, consolidation, exchange of securities, acquisition of assets, or otherwise, securities of an issuer that is not subject to the reporting requirements of Regulation A are issued to the holders of any class of securities of an issuer that is subject to ongoing reporting under Tier 2, the issuer succeeding to that class of securities must continue to file the reports required for Tier 2 offerings on the same basis as would have been required of the original Tier 2 issuer.[679] The successor issuer may suspend or terminate its reporting obligations on the same basis as the original issuer under Rule 257(d).[680]

2. Exchange Act Rule 15c2–11 and Other Implications of Ongoing Reporting Under Regulation A

Exchange Act Rule 15c2–11 governs broker-dealers' publication of quotations for securities in a quotation medium other than a national securities exchange.[681] The Commission adopted Rule 15c2–11 in 1971 to prevent fraudulent and manipulative trading schemes that had arisen in connection with the distribution and trading of certain unregistered securities.[682] The rule prohibits broker-dealers from publishing quotations (or submitting quotations for publication) in a ''quotation medium'' for covered over-the-counter securities without first reviewing basic information about the issuer, subject to certain exceptions.[683] A broker-dealer also must have a reasonable basis for believing that the issuer information is accurate in all material respects and that it was obtained from a reliable source.[684]

A broker-dealer can satisfy its obligations under Rule 15c2–11 if it has reviewed and maintained in its records certain specified information. The particular information that is required by the rule varies depending on the nature of the issuer and includes, among other things:

- For an issuer that has filed a registration statement under the Securities Act, a copy of the prospectus;
- for an issuer that has filed an offering statement under the Securities Act pursuant to Regulation A, a copy of the offering circular; or
- for an issuer subject to ongoing reporting under Sections 13 or 15(d) of the Exchange Act, the issuer's most recent annual report and any quarterly or current reports filed thereafter.[685]

a. Proposed Rules

As proposed, the ongoing reports for Tier 2 offerings under Regulation A, which would update the narrative and financial statement disclosures previously provided in Form 1–A on an annual and semiannual basis, with additional provisions for current reporting, would satisfy a broker-dealer's obligations under Rule 15c2–11 to review and maintain records of basic information about an issuer and its securities. In this regard, we proposed to amend Rule 15c2–11 to permit an issuer's ongoing reports filed in a Tier 2 offering under Regulation A to satisfy a broker-dealer's obligations to review specified information about an issuer and its security before publishing a quotation for a security (or submitting a quotation for publication) in a quotation medium.[686]

[670] *Id.*

[671] *See* General Instruction C to proposed Form 1–U.

[672] *Id.*

[673] Rule 257(c).

[674] 17 CFR 240.15d–2.

[675] Rule 257(b)(2)(ii). As adopted, we are revising Rule 257(b)(2)(ii) to reference the fiscal year or other period specified in Rule 257(b)(2)(i)(A), in order to avoid potential confusion about which most recent fiscal year is covered.

[676] *Id.*

[677] *Id.*

[678] *See* General Instruction A.(3) to Form 1–K and General Instruction A.(3) to Form 1–SA.

[679] *See* Rule 257(b)(5).

[680] *See* Section II.E.4. below for a discussion of the suspension or termination of disclosure obligations.

[681] 17 CFR 240.15c2–11.

[682] *See* Rel. No. 34–39670 (Feb. 17, 1998) (Publication or Submission of Quotations Without Specified Information) (describing Rel. No. 34–9310 (Sept. 13, 1971) [36 FR 18641]). *See* 17 CFR 240.15c2–11(e)(1) (defining quotation medium as any ''interdealer quotation system'' or any publication or electronic communications network or other device which is used by brokers or dealers to make known to others their interest in transactions in any security, including offers to buy or sell at a stated price or otherwise, or invitations of offers to buy or sell).

[683] 17 CFR 240.15c2–11(a); *See also* Rel. No. 34–29094 (April 17, 1991) [56 FR 19148].

[684] *See* 17 CFR 240.15c2–11 (Preliminary Note).

[685] A broker-dealer can also satisfy its review requirements under Rule 15c2–11 by reviewing certain information published pursuant to a Rule 12g3–2(b) exemption for foreign private issuers that claim the registration exemption or information specified in Rule 15c2–11(a)(5) for non-reporting issuers.

[686] In addition, we proposed a technical amendment to Rule 15c2–11 to amend subsection (d)(2)(i) of the rule to update the outdated reference to ''Schedule H of the By-Laws of the National Association of Securities Dealers, Inc.'' which is now known as the ''Financial Industry Regulatory Authority, Inc.'' and to reflect the correct rule reference.

We also solicited comment on other potential effects that Tier 2 ongoing reporting under Regulation A could have under other provisions of the federal securities laws, such as whether timely ongoing Regulation A reporting under Tier 2 should constitute ''adequate current public information'' for purposes of paragraph (c) of Rule 144.[687] Under this provision, issuers are required to make available adequate current public information about themselves, which, for issuers not subject to Exchange Act reporting, must include certain information described in Exchange Act Rule 15c2–11(a)(5).[688] We also solicited comment on whether ongoing Regulation A reporting for Tier 2 offerings should satisfy the information requirements of paragraph (d)(4) of Rule 144A.[689] Under that provision, holders of Rule 144A securities must have the right to obtain from the issuer, upon request, a very brief statement of the nature of the issuer's business and the products and services it offers, the issuer's most recent balance sheet and profit and loss and retained earnings statements, and similar financial statements for each of the two preceding fiscal years, which information must be ''reasonably current.'' [690]

b. Comments on Proposed Rules

All commenters that addressed Rule 15c2–11 supported amending the rule in the manner proposed.[691] Some commenters recommended further amending Rule 15c2–11(g) to provide that an issuer that is current in its Tier 2 obligations would be deemed to have ''reasonably current'' financial information, even if its most current balance sheet is as of a date up to nine months old and it has not provided other updated information.[692] Most commenters also recommended amending Rule 144(c) to allow for ongoing reporting under Tier 2 to constitute ''adequate current public information.'' [693] Other commenters recommended amending Rule 144A(d)(4) to allow for ongoing reporting under Tier 2 to satisfy the ''reasonably current information'' requirements of that rule.[694] Although the proposal did not solicit comment on Rule 144(i), one commenter recommended amending this rule to allow former shell companies to rely on Rule 144 if they have been current in their ongoing reporting under Regulation A for a certain period of time and without having to file a Form 10.[695] One commenter also supported allowing use of the Rule 144 safe harbor for former shell companies that were not previously registered under the Exchange Act and that are now selling securities under Regulation A.[696] Another commenter requested that the Commission limit the prohibitions on reliance on Rule 144 only to Exchange Act registered issuers.[697]

c. Final Rules

We are adopting final rules for Regulation A that, as proposed, amend Exchange Act Rule 15c2–11(a) so that an issuer's ongoing reports filed under Tier 2 will satisfy the specified information about an issuer and its security that a broker-dealer must review before publishing a quotation for a security (or submitting a quotation for publication) in a quotation medium. In addition, we are adopting, as proposed, a technical amendment to Rule 15c2–11 to amend subsection (d)(2)(i) of the rule to update the outdated reference to ''Schedule H of the By-Laws of the National Association of Securities Dealers, Inc.'' which is now known as the ''Financial Industry Regulatory Authority, Inc.'' and to reflect the correct rule reference.

We are not following the suggestions of some commenters that we adopt provisions in the final rules so that Tier 2 ongoing reports will satisfy the current information requirements of Rule 144 and Rule 144A for the entirety of an issuer's fiscal year. While commenters were generally supportive, we do not believe that the frequency of the required Tier 2 ongoing reporting merits a broad determination that such reports will constitute ''adequate public information'' or ''reasonably current information'' on a year-round basis. On the contrary, quarterly reporting is an integral part of the resale safe harbors provided for in Rule 144 and Rule 144A that contemplate the provision of ongoing and continuous information.[698] While the semiannual reporting required under the final rules for Tier 2 offerings will result in issuers only having ''reasonably current information'' and ''adequate current public information'' for the portions of the year during which the financial statements of such issuers continue to satisfy the respective rules,[699] we note that issuers may voluntarily submit on Form 1–U quarterly financial statements or other information necessary to satisfy the respective rule requirements.[700] In such instances, and provided that the financial statements otherwise meet the financial statement requirements of Form 1–SA, such voluntarily provided quarterly information could satisfy the ''reasonably current information'' and ''adequate current public information'' requirements of Rule 144 and Rule 144A. An issuer that is therefore current in its semiannual reporting required under the rules and voluntarily provides quarterly financial statements on Form 1–U will have provided reasonably current and adequate current public information for the entirety of such year under Rule 144 and Rule 144A.

3. Exchange Act Registration of Regulation A Securities

Under Section 15(d) of the Exchange Act, an issuer that has had a Securities Act registration statement declared effective must comply with the periodic reporting requirements of the Exchange Act.[701] Qualification of a Regulation A offering statement does not have the same effect. An issuer of Regulation A securities would not take on Exchange Act reporting obligations unless it separately registered a class of securities under Section 12 of the Exchange Act, or conducted a registered public offering.[702]

An issuer registering a class of securities under Section 12 of the Exchange Act must file either a Form

[687] 17 CFR 230.144(c).

[688] 17 CFR 230.144(c)(2); *see also* 17 CFR 230.15c2–11(a), (g).

[689] 17 CFR 230.144A(d)(4).

[690] *Id.*

[691] ABA BLS Letter; Canaccord Letter; CFIRA Letter 1; KVCF Letter; Milken Institute Letter; MoFo Letter; Paul Hastings Letter; Public Startup Co. Letter 1; REISA Letter; WR Hambrecht + Co Letter.

[692] ABA BLS Letter; Canaccord Letter; Milken Institute Letter; MoFo Letter.

[693] ABA BLS Letter; Canaccord Letter; CFIRA Letter 1; McCarter & English Letter; Paul Hastings Letter; KVCF Letter; Milken Institute Letter; Richardson Patel Letter; REISA Letter; WR Hambrecht + Co Letter.

[694] ABA BLS Letter; Canaccord Letter; Milken Institute Letter; MoFo Letter.

[695] McCarter & English Letter.

[696] Public Startup Co. Letter 1.

[697] Letter from Jason Coombs, Co-Founder and CEO, Public Startup Company, Inc., March 24, 2014 (''Public Startup Co. Letter 2'').

[698] *See, e.g.,* Rel. No. 33–6099 (Aug. 2, 1979) (Question 20). *See also* Section 13(a) of the Exchange Act, which contemplates, but does not prescribe, reasonably current information in the context of annual and quarterly reporting. 15 U.S.C. 78m(a).

[699] *See* Securities Act Rule 144(c)(2); Securities Act Rule 144A(d)(4)(ii); Exchange Act Rule 15c2–11(a) and Rule 15c2–11(g).

[700] *See* Item 9 of Form 1–U; *see also* Section II.E.1.c(3). and fn. 655 above.

[701] While issuers with a Section 15(d) reporting obligation are required to file the same periodic reports as issuers that have registered a class of securities under Section 12, Section 15(d) reporting issuers are not subject to additional Exchange Act obligations (*e.g.,* proxy rules, short-swing profit rules, and beneficial ownership reporting) that apply to Exchange Act registrants.

[702] *See also* Section II.B.6. above for a discussion of the conditional exemption from Section 12(g) adopted in the final rules today.

10[703] or Form 8–A[704] with the Commission. Form 10 is the general form for Exchange Act registration, while Form 8–A is a short-form registration statement. An issuer must use a Form 10 if, at the time it files its registration statement, it is not already subject to a Section 13 or Section 15(d) reporting obligation. An issuer may use Form 8–A if it is already subject to the provisions of either Section 13 or Section 15(d). Additionally, when an issuer that is not already subject to the provisions of either Section 13 or 15(d) plans to list its securities on a national securities exchange contemporaneously with the effectiveness of a Securities Act registration statement, the Commission staff will not object if that issuer files a Form 8–A in lieu of a Form 10 in order to avoid having the issuer restate the contents of its Securities Act registration statement in its Exchange Act registration statement.[705]

a. Proposed Rules

As proposed, issuers conducting offerings under Regulation A that seek to list their securities on a national securities exchange or otherwise register a class of securities under the Exchange Act would be required to file a registration statement on Form 10. We solicited comment, however, on whether we should provide a simplified means for Regulation A issuers to register a class of securities under the Exchange Act, for example, by permitting such issuers to file a Form 8–A rather than a Form 10 in conjunction with, or following, the qualification of a Regulation A offering statement on Form 1–A.

We also invited comment on ways to facilitate secondary market trading in the securities of Regulation A issuers, such as by encouraging the development of ''venture exchanges'' or other trading venues that are focused on attracting such issuers.

b. Comments on Proposed Rules

Many commenters recommended that Regulation A issuers be allowed to use Form 8–A to register a class of securities under the Exchange Act in Tier 2 offerings.[706] Some of these commenters limited their recommendation to when the issuer follows the requirements of Part I of Form S–1 in its offering circular.[707] Separately, three commenters recommended allowing issuers to use a ''super'' Form 8–A that would require issuers to include any disclosure that is required in a Form 10, but is not included in the chosen offering circular format under Form 1–A.[708] Several commenters suggested allowing issuers to use a Form 10 that would go effective immediately as an alternative to filing a Form 8–A.[709] This process could be used to register securities under the Exchange Act when a simultaneous exchange listing was not contemplated. Other commenters recommended limiting the use of Form 8–A to situations contemporaneous with qualification of an offering statement,[710] within 12 months of qualification,[711] or after a brief time period after an offering statement is qualified.[712] Separately, two commenters recommended that Regulation A issuers that become Exchange Act reporting companies be considered ''emerging growth companies.''[713] One commenter recommended allowing issuers to use Form 8–A but to continue using Regulation A reports until its non-affiliate market capitalization reached $250 million.[714]

Two commenters encouraged the Commission to foster the development of venture exchanges on which Regulation A securities could be traded,[715] while another commenter largely opposed the creation of venture exchanges.[716]

c. Final Rules

In the final rules, and consistent with the views of many commenters,[717] we are simplifying Exchange Act registration in connection with Regulation A offerings conducted pursuant to Tier 2 so that issuers wishing to register a class of Regulation A securities under the Exchange Act may do so by filing a Form 8–A in conjunction with the qualification of a Form 1–A. Only issuers that follow Part I of Form S–1 or the Form S–11 disclosure model in the offering circular will be permitted to use Form 8–A.[718] An issuer registering a class of securities under the Exchange Act concurrently with the qualification of a Regulation A offering statement will become an Exchange Act reporting company upon effectiveness of the Form 8–A and, if applicable, its obligation to file ongoing reports under Regulation A will be suspended for the duration of the resulting reporting obligation under Section 13 of the Exchange Act.[719] While some commenters suggested that we permit issuers to rely on the Form 8–A to register a class of securities for up to 12 months following the qualification of an offering statement, we believe limiting short form registration to situations in which an offering statement is being concurrently qualified will help ensure that the disclosures incorporated by reference into the Form 8–A, including financial statements contained in the offering statement are current.[720] The final rules would not, however, prevent an issuer from registering a class of securities under the Exchange Act on Form 8–A concurrent with the re-qualification of a previously qualified offering statement.

We recognize that Exchange Act reporting requires more comprehensive ongoing reporting than the Regulation A disclosure regime, which is why facilitating issuers' entrance into the Exchange Act reporting system on Form 8–A concurrent with the qualification of a Regulation A offering statement will benefit investors. At a minimum, issuers pursuing this route to exchange listing must meet listing standards of, and be certified by, the exchange before the Form 8–A will be declared effective. In order to be approved for listing on an exchange, issuers generally must meet certain size, financial, minimum securities distribution (or liquidity), and corporate governance criteria.[721]

[703] 17 CFR 249.210. Foreign private issuers must file a Form 20–F, 17 CFR 249.220f, or, where available, a Form 8–A.

[704] 17 CFR 249.208a.

[705] *See* Rel. No. 34–38850 (Sept. 2, 1997) [62 FR 39755], at 39757 (''[A]n issuer registering an initial public offering will be permitted to use Form 8–A even though it will not be subject to reporting until after the effectiveness of that Securities Act registration statement.'').

[706] ABA BLS Letter; Canaccord Letter; CFIRA Letter 1; CFIRA Letter 2; Fallbrook Technologies Letter; Frutkin Law Letter; McCarter & English Letter; Milken Institute Letter; MoFo Letter; OTC Markets Letter; Paul Hastings Letter; Richardson Patel Letter; WR Hambrecht + Co Letter.

[707] ABA BLS Letter; CFIRA Letter 1; WR Hambrecht + Co Letter.

[708] Canaccord Letter; Milken Institute Letter; MoFo Letter.

[709] ABA BLS Letter; Canaccord Letter; MoFo Letter.

[710] Milken Institute Letter.

[711] Frutkin Law Letter; Richardson Patel Letter.

[712] McCarter & English Letter.

[713] ABA BLS Letter; MoFo Letter.

[714] Paul Hastings Letter.

[715] Heritage Letter; SBIA Letter.

[716] OTC Markets Letter.

[717] *See* fn. 706 above.

[718] *See* Form 8–A, General Instructions A(c).

[719] As discussed more fully in in Section II.E.4. below, a Tier 2 issuer may terminate its Regulation A ongoing disclosure obligation when it is no longer subject to the ongoing reporting requirements of Section 13 of the Exchange Act. *See also* Rule 257(e).

[720] In order to ensure that registration on Form 8–A is limited to a concurrently qualified Regulation A offering statement, the amendments to Form 8–A expressly limit the use of the form to instances where the filing of the Form 8–A and, where applicable, the receipt by the Commission of certification from the national securities exchange listed on the form occur within five calendar days after the qualification of the Regulation A offering statement.

[721] *See, e.g.,* Initial Listing Guide for the NASDQAQ Stock Market, *available at: https://listingcenter.nasdaq.com/assets/initialguide.pdf*;

Additionally, in order to maintain listing on an exchange, issuers must maintain certain qualitative and quantitative continued listing standards.[722] Therefore, in addition to the provision of ongoing Exchange Act reports, investors will benefit from the issuer's satisfaction of the exchange's initial and ongoing listing standards, and may benefit from greater liquidity for their shares as a result.

As suggested by commenters, we believe that our accommodation should be limited to instances where an issuer provides disclosure in Part II of Form 1–A that follows Part I of Form S–1 or Form S–11, instead of the Offering Circular format. While all formats require extensive disclosure that, with the exception of item numbering, is similar in many respects, we believe that an issuer entering Exchange Act reporting should provide disclosure in a manner that is generally consistent with the requirements of issuers entering the Exchange Act reporting regime through registered offerings.[723] In this regard, we note that issuers qualifying an offering statement that follows Part I of Form S–1 or Form S–11 will, however, be required to follow the financial statement requirements of Part F/S of Form 1–A. For purposes of concurrent Exchange Act registration, the financial statements included in Form 1–A must be audited in accordance with the standards of the PCAOB by a PCAOB-registered auditor that is independent pursuant to Article 2 of Regulation S–X.[724] After effectiveness of the Form 8–A, they will be subject to Exchange Act reporting and compliance with the financial statement requirements of Exchange Act reporting companies.

Consistent with the suggestion of commenters,[725] we agree that issuers entering Exchange Act reporting under a qualified Regulation A offering statement and Form 8–A will be considered ''emerging growth companies'' to the extent the issuers otherwise qualify for such status. Issuers should base status determinations on the definition of an emerging growth company as it appears in the Securities Act and the Exchange Act.[726]

As noted above, the Proposing Release sought comment on whether we should consider encouraging the development of venture exchanges or other trading venues to facilitate the secondary market trading of Regulation A securities. We are considering venture exchanges as a way to provide liquidity for smaller issuers, and are contemplating their use for Regulation A securities as part of that consideration.

4. Exit Report on Form 1–Z

a. Proposed Rules

(1) Summary Information on Terminated or Completed Offerings

As discussed in Section II.E.1. above, we proposed to rescind Form 2–A but to continue to require Regulation A issuers to file the information generally disclosed in Form 2–A with the Commission electronically on EDGAR. Consistent with the related portion of proposed Form 1–K,[727] we proposed to convert the Form 2–A information into an online XML-based fillable form with indicator boxes or buttons and text boxes to be filed electronically with the Commission as Part I of proposed Form 1–Z (exit report). Issuers conducting Tier 1 offerings would be required to provide this information on Form 1–Z not later 30 calendar days after termination or completion of the offering, while issuers conducting Tier 2 offerings would be required to provide this information on Form 1–Z at the time of filing the exit report, if not previously provided on Form 1–K as part of their annual report.[728] As proposed, the summary offering information disclosed on Form 1–Z would be publicly available on EDGAR (but not otherwise required to be distributed to investors) and would include the date the offering was qualified and commenced, the number of securities qualified, the number of securities sold in the offering, the price of the securities, any fees associated with the offering, and the net proceeds to the issuer.

(2) Termination or Suspension of Tier 2 Disclosure Obligations

We further proposed to permit a Tier 2 issuer that has filed all ongoing reports required by Regulation A for the shorter of (1) the period since the issuer became subject to such reporting obligation or (2) its most recent three fiscal years and the portion of the current year preceding the date of filing Form 1–Z to immediately suspend its ongoing reporting obligation under Regulation A at any time after completing reporting for the fiscal year in which the offering statement was qualified, if the securities of each class to which the offering statement relates are held of record by fewer than 300 persons and offers or sales made in reliance on a qualified offering statement are not ongoing.[729] In such circumstances, an issuer's obligation to continue to file ongoing reports in a Tier 2 offering under Regulation A would be suspended immediately upon the filing of a notice with the Commission on Part II of proposed Form 1–Z. A manually signed copy of the Form 1–Z would have to be executed by the issuer and related signatories before or at the time of filing and retained by the issuer for a period of five years.[730] Issuers would be required to produce the manually signed copy to the Commission, upon request.[731]

We further proposed that issuers' obligations to file ongoing reports in a Tier 2 offering under Regulation A would be automatically suspended upon registration of a class of securities under Section 12 of the Exchange Act or effectiveness of a registration statement under the Securities Act, such that Exchange Act reporting obligations would always supersede ongoing reporting obligations under Regulation A. If an issuer terminates or suspends its reporting obligations under the Exchange Act and the issuer is eligible to suspend its Regulation A reporting obligation by filing a Form 1–Z at that time, the ongoing reporting obligations would terminate automatically and no Form 1–Z filing would be required to terminate the issuer's Regulation A reporting obligation. If the issuer is not eligible to file a Form 1–Z at that time, it would need to recommence its Regulation A reporting with a report covering any financial period not completely covered by an effective registration statement or filed Exchange Act report.[732]

U.S. Listing Standards for the New York Stock Exchange (NYSE), *available at: https://www.nyse.com/publicdocs/nyse/listing/NYSE%20_Initial_Listing_Standards_Summary.pdf*.

[722] *See, e.g.,* Continued Listing Guide for the NASDQAQ Stock Market, *available at: https://listingcenter.nasdaq.com/assets/continuedguide.pdf*; Continued Listing Standards for the New York Stock Exchange (NYSE), *available at: https://www.nyse.com/get-started/reference*.

[723] *See* Section II.C.3.b(2)(c). above for a description of the financial statement requirements.

[724] *See* General Instruction A.(a) to Form 8–A.

[725] ABA BLS Letter; MoFo Letter.

[726] Under Section 2(a)(19) of the Securities Act, an ''emerging growth company'' is defined as, among other things, an issuer that had total annual gross revenues of less than $1 billion during its most recently completed fiscal year. 15 U.S.C. 77b(a)(19). *See also* Section 3(a)(80) of the Exchange Act (which repeats the same definition). 15 U.S.C. 78c(a)(80).

[727] *See also* discussion in Section II.C.1. (Electronic Filing; Delivery Requirements) and Section II.C.3.a. (Part I (Notification)) above.

[728] *See* Section II.E.1. above for a discussion of the requirements for proposed Form 1–K.

[729] *See* proposed Rule 257(d)(2).

[730] *See* Instruction to proposed Form 1–Z.

[731] *Id.*

[732] *See* proposed Rule 257(d)(1) and (e).

b. Final Rules

(1) Summary Information on Terminated or Completed Offerings

The single commenter on this issue approved of the proposed requirement to file summary information after the termination or completion of a Regulation A offering under both tiers.[733] We are adopting this requirement without changes.

(2) Termination or Suspension of Tier 2 Disclosure Obligations

We are adopting, with a change from the proposal, final rules that will permit issuers that conduct a Tier 2 offering to terminate or suspend their ongoing reporting obligations on a basis similar to the provisions that allow issuers to suspend their ongoing reporting obligations under Section 13 and Section 15(d) of the Exchange Act.[734] As proposed, the final rules permit a Tier 2 issuer that has filed all reports required by Regulation A for the shorter of: (1) The period since the issuer became subject to such reporting obligation, or (2) its most recent three fiscal years and the portion of the current year preceding the date of filing Form 1–Z to immediately suspend its ongoing reporting obligation under Regulation A at any time after completing reporting for the fiscal year in which the offering statement was qualified, if the securities of each class to which the offering statement relates are held of record by fewer than 300 persons and offers or sales made in reliance on a qualified Tier 2 offering statement are not ongoing.[735] In a change from the proposal, in order to be consistent with Title VI of the JOBS Act, the final rules permit banks or bank holding companies[736] to immediately suspend their ongoing reporting obligation under Regulation A at any time after completing reporting for the fiscal year in which the offering statement was qualified, if the securities of each class to which the offering statement relates are held of record by fewer than 1,200 persons, instead of 300 persons, and offers or sales made in reliance on a qualified Tier 2 offering statement are not ongoing.[737] As proposed, an issuer's obligation to continue to file ongoing reports in a Tier 2 offering under Regulation A will be suspended immediately upon the filing of a notice to the Commission on Part II of proposed Form 1–Z.[738] As proposed, a manually signed copy of the Form 1–Z must be executed by the issuer and related signatories before or at the time of filing and retained by the issuer for a period of five years.[739] Issuers must produce the manually signed copy to the Commission, upon request.[740]

We otherwise adopt the proposed rules for the termination or suspension of a Tier 2 ongoing reporting obligation as proposed and without changes.

F. Insignificant Deviations From a Term, Condition or Requirement

We did not propose any changes to the existing insignificant deviation provisions of Rule 260. Rule 260 provides that certain insignificant deviations from a term, condition or requirement of Regulation A will not result in the issuer's loss of the exemption from registration under Section 5 of the Securities Act.[741] The provisions of Regulation A regarding issuer eligibility, offering limits, offers, and continuous or delayed offerings of Regulation A are deemed to be significant to the offering as a whole, and any deviations from these provisions result in the issuer's loss of the exemption.

One commenter generally supported the concept of allowing for insignificant deviations from the rules without the loss of the exemption.[742] This commenter recommended that the Commission give notice of violations and allow companies to have an opportunity to cure any such violation. The commenter also recommended imposing lesser sanctions, such as fines, if less significant violations could not be cured. Another commenter recommended including deviations from the prohibitions on the timing of sales and the amounts sold to investors on the list of matters deemed significant in proposed Rule 260, noting that, in its view, it would be difficult for issuers to show a good faith and reasonable attempt was made to comply with the requirements of Rule 251(d)(2).[743] This commenter noted that issuers, investors and state regulators need clear boundaries to know what actions will disqualify an offering from exemption and thus, with respect to the proposed provisions for Tier 2 offerings, would result in a loss of state preemption.

The final rules maintain the existing provisions for insignificant deviations, as proposed. Under the final rules, a failure to comply with a term, condition or requirement of Regulation A will not result in the loss of the exemption for any offer or sale to a particular individual or entity, if the person relying on the exemption establishes that:

(1) The failure to comply did not pertain to a term, condition or requirement directly intended to protect that particular individual or entity;

(2) The failure to comply was insignificant with respect to the offering as a whole, provided that any failure to comply with the offering limitations, issuer eligibility criteria, or requirements for offers or continuous or delayed offerings will be deemed to be significant to the offering as a whole; and

(3) A good faith and reasonable attempt was made to comply with all applicable terms, conditions and requirements of Regulation A.[744]

We believe that provisions for insignificant deviations serve an important function by allowing for certain errors that can occur in the offering process, while clearly delineating those provisions from which an issuer may not deviate. We believe the current provisions provide assurances to investors that issuers will not be able to deviate from certain fundamental requirements in the rules and avoid undue hardship that could befall issuers for inadvertent errors, such as loss of the exemption and, with respect to Tier 2 offerings, the loss of preemption of state securities law registration and qualification requirements. We are not expanding the list of provisions from which an issuer may not deviate. We note that whether a deviation from the requirements would be significant to the offering as a whole would depend on the facts and

[733] CFA Institute Letter.

[734] *See* Exchange Act Section 15(d), 15 U.S.C. 78*o*(d); Exchange Act Rule 12h-3, 17 CFR 240.12h–3.

[735] Rule 257(d)(2).

[736] The Commission recently proposed changes to its rules regarding Exchange Act registration to implement Title V and Title VI of the JOBS Act. *See* Rel. No. 33–9693 (Dec. 18, 2014) [79 FR 78343]. These proposed changes would, among other things, apply the registration thresholds applicable to banks and bank holding companies, as set forth in Section 12(g) of the Exchange Act, to savings and loan holding companies. Should we adopt this provision in the final rules for Section 12(g), we would anticipate making a corresponding change to the termination provisions of Rule 257(d).

[737] Rule 257(d)(2). The final rules, as they apply to the number of record holders of other types of issuers, are adopted without changes from the proposal. Although Rule 257(d)(2) relies on the definition of ''held of record'' in Rule 12g5–1, issuers seeking to terminate or suspend their Tier 2 ongoing disclosure obligations are specifically excluded from relying on the amendment to such definition, which exclude securities issued in Tier 2 offerings. *See* Rule 12g5–1(a)(7) and Section II.B.6 above.

[738] *Id.* In this regard, we have clarified that the Commission may only deny a Form 1–Z filing if the issuer is ineligible to use the form. *See* Rule 257(d).

[739] *See* Instruction to Form 1–Z.

[740] *Id.*

[741] 17 CFR 230.260.

[742] Heritage Letter.

[743] MCS Letter.

[744] Rule 260.

circumstances related to the offering and the deviation. We also note that in certain situations, such as in the event of pre-qualification sales, it may be difficult for issuers to establish a good faith attempt at compliance. In such circumstances, an issuer would not be able to rely on the provision.

G. Bad Actor Disqualification

1. Proposed Rules

Under Securities Act Section 3(b)(2)(G)(ii), the Commission has discretion to issue rules disqualifying certain felons and other 'bad actors' from using amended Regulation A. Such rules, if adopted, must be ''substantially similar'' to those adopted to implement Section 926 of the Dodd-Frank Act, which requires the Commission to adopt disqualification rules for securities offerings under Rule 506 of Regulation D. The Commission adopted the disqualification provisions required by Section 926 in Rule 506(d) together with a related disclosure requirement in Rule 506(e) on July 10, 2013.[745]

We proposed amendments to Regulation A's bad actor disqualification provisions that would make those provisions substantially similar to those adopted under Rule 506 of Regulation D. We also sought comment on the proposed disqualification rules and the categories of persons and types of events covered by the proposed rules. Additionally, we sought comment more broadly on the interpretation of the phrase ''voting equity securities,'' as it appears in ''any beneficial owner of 20% or more of the issuer's outstanding voting equity securities, calculated on the basis of voting power,'' a category of covered persons in Rule 506(d) and the proposed disqualification provisions for Regulation A as well as our proposed rules for securities-based crowdfunding transactions.

2. Comments on Proposed Rules

In general, commenters did not oppose the proposed amendments to Regulation A's bad actor disqualification rules. Some commenters expressly supported the proposed rules.[746] Some commenters, however, recommended changes to particular provisions of the proposal. One commenter recommended revising the look-back periods for disqualifying events to run from the time of sale, not from the time of filing of the offering statement as proposed.[747] Another commenter recommended adding final orders of Canadian provincial regulators to the list of disqualifying events.[748] This commenter noted that some Canadian provinces have information publicly posted on their Web sites that would facilitate the bad actor diligence process. One commenter recommended that the Commission develop an online bad actor database.[749] Another commenter supported bad actor provisions as extensive as those under Rule 506(d).[750] Finally, one commenter recommended defining voting equity securities for purposes of the bad actor disqualifications provisions using the definition in Rule 12b-2 of the Exchange Act.[751]

3. Final Rules

We are adopting bad actor disqualification provisions for Regulation A, substantially as proposed with the exception of one change to further align the final rules for Regulation A with similar provisions in Rule 506(d). The covered persons and triggering events in the final rules for Regulation A are substantially the same as the covered persons and triggering events included in Rule 506(d).[752] The covered persons include managing members of limited liability companies; compensated solicitors of investors; underwriters; executive officers and other officers participating in the offering; and beneficial owners of 20% or more of the issuer's outstanding voting equity securities, calculated on the basis of voting power.[753] Consistent with the bad actor disqualification rules under Rule 506(d), the final rules also include two new disqualification triggers not previously present in Regulation A: (1) Final orders and bars of certain state and other federal regulators,[754] and (2) Commission cease-and-desist orders relating to violations of scienter-based anti-fraud provisions of the federal securities laws or Section 5 of the Securities Act.[755] In order to clarify the scope of the term ''final order'' as it appears in Rule 262, we are including a definition of that term in Regulation A that is consistent with the term as it appears in Rule 501(g) of Regulation D. As adopted, a ''final order'' shall mean a written directive or declaratory statement issued by a federal or state agency described in Rule 262(a)(3) under applicable statutory authority that provides for notice and an opportunity for hearing, which constitutes a final disposition or action by that federal or state agency.[756] We believe that creating a uniform set of bad actor triggering events should simplify due diligence, particularly for issuers that may engage in different types of exempt offerings. For this reason, consistent with the disqualification provisions of Rule 506(d), the final rules do not include final orders of Canadian provincial regulators in the list of disqualifying events.

The final disqualification rules in Regulation A also specify that an order must bar the covered person at the time of filing of the offering statement, as opposed to the requirement in Rule 506(d) that the order must bar the covered person at the time of the relevant sale.[757] This clarification accords with the current provisions of Rule 262 and is appropriate for Regulation A because there is no filing requirement before the time of first sale in Rule 506.[758] We are further adopting a reasonable care exception to the disqualification provisions on a basis consistent with Rule 506(d).[759] Under the final rules, an issuer will not lose the benefit of the Regulation A exemption if it is able to show that it did not know, and in the exercise of reasonable care could not have known, of the existence of a disqualification.[760] As proposed, and consistent with the provisions of existing Regulation A, the final rules permit issuers that are disqualified from relying on the exemption to request a waiver of disqualification from the Commission.[761]

In the Proposing Release, we solicited comment on the interpretation of the phrase ''voting equity securities,'' as it appears in ''any beneficial owner of 20% or more of the issuer's outstanding voting equity securities, calculated on the basis of voting power,'' a category of covered persons in Rule 506(d) and proposed Rule 262 as well as our

[745] Rel. No. 33–9414 (July 10, 2013) [78 FR 44729]. The Commission proposed rules substantially similar to those adopted pursuant to Section 926 of the Dodd-Frank Act in the Proposing Release for securities-based crowdfunding transactions under Title III of the JOBS Act. *See* Rel. No. 33–9470, at 284.

[746] *See, e.g.,* KVCF Letter; MCS Letter;

[747] KVCF Letter.

[748] Karr Tuttle Letter.

[749] Ladd Letter 2.

[750] MCS Letter.

[751] ABA BLS Letter (suggesting ''voting securities'' be deemed securities the holders of which are presently entitled to vote for the election of directors (or the equivalent)).

[752] 17 CFR 230.506(d).

[753] Rule 262(a).

[754] Rule 262(a)(3).

[755] Rule 262(a)(5).

[756] Rule 261(d).

[757] Rule 506(d), 17 CFR 230.506(d).

[758] Under Rule 503 of Regulation D, issuers must file a notice of sales on Form D no later than 15 calendar days after the first sale of securities. 17 CFR 230.503(a).

[759] *See* Rule 262(b)(4).

[760] *Id.*

[761] Rule 262(b)(2).

proposed rules for securities-based crowdfunding transactions. Consistent with the views of at least one commenter,[762] we have reconsidered our initial views on the interpretation of ''voting equity securities.'' We believe that it is appropriate to refine our initial interpretation,[763] as it applies to our bad actor disqualification rules,[764] and create a ''bright-line'' standard that is consistent with the definition of the term ''voting securities'' in Rule 405 of the Securities Act.[765] In this regard, we believe that such a term should include only those voting equity securities which, by their terms, currently entitle the holder to vote for the election of directors. In other words, we believe the term should be read to denote securities having a right to vote that are presently exercisable. Additionally, while the ability to control or significantly influence the management or policies of the issuer may be derived in part from the power to vote for the election of directors, in order to dispel any uncertainty as to the scope of our interpretation, we believe the term ''voting equity securities'' should be interpreted based on the present right to vote for the election of directors, irrespective of the existence of control or significant influence.

Under the final rules, offerings that would have been disqualified from reliance on Regulation A under Rule 262 as in effect before today's amendments will continue to be disqualified. Triggering events that were not previously included in the bad actor rules for Regulation A and that pre-date effectiveness of the final rules will not cause disqualification, but instead must be disclosed on a basis consistent with Rule 506(e). Specifically, issuers will be required to indicate in Part I of Form 1–A that none of the persons described in Rule 262 are disqualified and, where applicable, that disclosure of triggering events that would have triggered disqualification, but occurred before the effective date of the Regulation A amendments, will be provided in Part II of Form 1–A.[766]

We believe that the final rules are appropriate in light of the Section 3(b)(2)(G)(ii) mandate, the benefits of creating a more uniform set of standards for all exemptions that include bad actor disqualification, and the required disclosure in the offering circular of persons subject to events that would have triggered disqualification, but occurred before the effective date of the final rules.

H. Relationship With State Securities Law

1. Proposed Rules

Although Section 401(b) of the JOBS Act does not exempt offerings made under Section 3(b)(2) and the related rules from state law registration and qualification requirements, it added Section 18(b)(4)(D) to the Securities Act.[767] That provision states that Section 3(b)(2) securities are covered securities for purposes of Section 18 if they are ''offered or sold on a national securities exchange'' or ''offered or sold to a qualified purchaser, as defined by the Commission pursuant to [Section 18(b)(3)] with respect to that purchase or sale.'' Section 18(b)(3) provides that ''the Commission may define the term 'qualified purchaser' differently with respect to different categories of securities, consistent with the public interest and the protection of investors.''

Commenters in the pre-proposal stage suggested that the cost of state securities law compliance, which they identified as an obstacle to the use of Regulation A, would discourage market participants from using the new exemption. In addition, the GAO, as required by Section 402 of the JOBS Act, conducted a study on the impact of state securities laws registration and qualification requirements on offerings conducted under Regulation A and found that state securities laws were among several central factors that may have contributed to the lack of use of Regulation A.[768]

In light of the issues raised by commenters and in the GAO Report, as well the substantial investor protections included in the proposed rules to amend Regulation A and implement Title IV of the JOBS Act, we proposed to define the term ''qualified purchaser'' in a Regulation A offering to consist of: (1) All offerees in a Regulation A offering and (2) all purchasers in a Tier 2 offering.[769] We indicated in the Proposing Release that we believed this approach would protect offerees and purchasers in Regulation A securities, while streamlining compliance and reducing transaction costs.

We proposed to preempt state securities laws registration and qualification requirements with respect to all offerees in a Regulation A offering, in order to allow issuers relying on Regulation A to communicate with potential investors about their offerings using the internet, social media, and other means of widespread communication, without concern that such communications might trigger registration requirements under state law.[770] We further proposed to preempt state securities laws registration and qualification requirements with respect to all purchasers in a Tier 2 offering to help make Regulation A a more workable means of capital formation. We also noted our belief that the substantial investor protections embedded in the proposed rules, including issuer eligibility conditions, limitations on investment, disclosure requirements, qualification process, and ongoing reporting requirements of Tier 2, in combination, could address potential concerns that may arise as a result of preemption.

Under the proposed rules, state securities regulators would retain their authority to:

- Require the filing of any document filed with the Commission and the payment of filing fees;
- investigate and bring enforcement actions against fraudulent securities transactions and unlawful conduct by broker-dealers in such offerings; and

[762] ABA BLS Letter.

[763] When we adopted Rule 506(d), we did not define ''voting equity securities,'' but rather indicated that our initial intention would be to consider securities as voting equity securities if ''securityholders have or share the ability, either currently or on a contingent basis, to control or significantly influence the management and policies of the issuer through the exercise of a voting right.'' *See* SEC Rel. No. 33–9414 (July 10, 2013) [78 FR 44729], text accompanying fn. 62. In light of concerns that our initial interpretation may be overbroad and that a ''bright line'' test may be more workable and would facilitate compliance, as we indicated in the Proposing Release, we are reconsidering our initial views. *See* Proposing Release, at Section II.G.

[764] In addition to Regulation A, this interpretive position would apply to Rule 505 and Rule 506 of Regulation D.

[765] In Securities Act Rule 405, the term voting securities means securities the holders of which are presently entitled to vote for the election of directors. 17 CFR 230.405.

[766] As discussed in Section II.C.3.a. above, Part I of Form 1–A focuses, in part, on issuer eligibility, and requires issuers to make an eligibility determination at the outset of filling out Form 1–A.

[767] Section 18 of the Securities Act generally provides for exemption from state law registration and qualification requirements for certain categories of securities, defined as ''covered securities.'' *See* Section 18(c), 15 U.S.C. 77r(c). State securities regulators retain authority to impose certain filing and fee requirements and general antifraud enforcement authority with respect to covered securities. *See* Section 18(c), 15 U.S.C. 77r(c).

[768] *See* fn. 90 above.

[769] Proposed Rule 256.

[770] We understand that some state securities regulators do not require the registration of broadly advertised offerings such as internet offerings, if the advertisement indicates, directly or indirectly, that the offering is not available to residents of that state. *See, e.g.,* Washington State Dep't of Financial Institutions, Securities Act Policy Statement—16, *available at: http://dfi.wa.gov/sd/securitiespolicy.htm#ps-16*; *see also* NASAA Reports ¶ 7,040 (regarding NASAA resolution, dated January 7, 1996, which encourages states to take appropriate steps to exempt from securities registration offers of securities over the Internet).

• enforce the filing and fee requirements by suspending the offer or sale of securities within a given state for the failure to file or pay the appropriate fee.[771]

As noted in the Proposing Release, it was our preliminary view that the additional requirements for Tier 2 offerings would meaningfully bolster the protections otherwise embedded in Regulation A and therefore a different treatment than Tier 1 offerings is appropriate.

2. Comments on Proposed Rules

The preemption of state securities law registration and qualification requirements contemplated in the proposed ''qualified purchaser'' definition received an extensive amount of public commentary. Commenters were sharply divided on the need for state securities law preemption in Regulation A.

Many commenters objected to the preemption of state securities law registration and qualification requirements.[772] The views of these commenters were based on the following arguments:

• A ''qualified purchaser'' means a purchaser with specialized skill, experience or knowledge.[773]

• The qualifications of the purchaser are key, not the nature of the issuer or the offering. Thus, the proposed definition of ''qualified purchaser'' is contrary to the plain meaning of this term.[774]

• The legislative history of the National Securities Markets Improvement Act of 1996 (NSMIA)[775] suggests that definitions of ''qualified purchaser'' must include an investor sophistication test.[776] The Commission made similar statements on the ''qualified purchaser'' definition in a 2001 Proposing Release.[777]

• Congress considered preemption in the context of a provision to preempt offerings conducted through a broker-dealer in an early draft of Title IV of the JOBS Act, but then purposefully excluded such broad preemption from the final statute.[778]

• The Commission's cost-benefit analysis of preemption was inadequate because it largely ignored investor protections, the benefits of state regulation, perceived resource constraints at the Commission, and preemption's impact on investor confidence in the markets.[779]

• Although the GAO Report conducted under Section 402 of the JOBS Act cited compliance with state securities law review and qualification requirements as a factor in the lack of use of Regulation A, it also noted lengthy Commission reviews of Form 1–A filings.[780]

• States play a unique role in regulating securities offerings due to their localized knowledge and resources, which aid in detecting fraud and facilitating issuer compliance.[781]

• The investor protections included in the proposal do not act as an adequate substitute for state review and comment on offering statements.[782]

• The states have adopted and implemented a new coordinated review program, designed to address many of the perceived inefficiencies associated with state registration.[783]

Many other commenters expressed their support for preemption, as proposed.[784] These commenters made the following arguments:

[771] Section 18(c) (Preservation of Authority) of the Securities Act, 15 U.S.C. 77r(c).

[772] Letter from A. Heath Abshure, Arkansas Securities Commissioner, February 20, 2014 (''ASD Letter''); CFA Letter; CFA Institute Letter; Letter from Rep. Stephen F. Lynch, et al, U.S. House of Representatives, June 3, 2014 (''Congressional Letter 2''); Letter from Sen. Barbara Boxer, et al, U.S. Senate, Aug. 1, 2014 (''Congressional Letter 4''); Cornell Clinic Letter; Groundfloor Letter (suggesting that the Commission should at least evaluate NASAA's coordinated review program for 12 months); Karr Tuttle Letter (acknowledging that state preemption may still be necessary for states not participating in NASAA's new coordinated review program); Letter from William F. Galvin, Secretary, Commonwealth of Massachusetts, December 18, 2013 (''Massachusetts Letter 1''); Massachusetts Letter 2; MCS Letter; Letter from Andrea Seidt, President, et al., North American Securities Administrators Association (NASAA), February 19, 2014 (''NASAA Letter 1''); NASAA Letter 2; Letter from William Beatty, President, North American Securities Administrators Association (NASAA), February 11, 2015 (''NASAA Letter 3''); Letter from Jack E. Herstein, Assistant Director, Nebraska Department of Banking and Finance, February 10, 2014 (''NDBF Letter''); Letter from Chad Johnson, Bureau Chief, Investor Protection Bureau, New York State Attorney General's Office, New York, May 7, 2014 (''NYIPB Letter''); Letter from Irving L. Faught, Administrator, Oklahoma Department of Securities, March 24, 2014 (''ODS Letter''); Letter from Damaris Mendoza-Román, Assistant Commissioner, Office of the Commissioner of Financial Institutions, Puerto Rico, March 5, 2014 (''PRCFI Letter''); Letter from Hon. Jesse White, Illinois Secretary of State, et al., March 4, 2014 (''Secretaries of State Letter''); Letter from Lindsay M. Scherber, May 8, 2014 (''Scherber Letter''); Letter from Janet M. Tavakoli, President, Tavakoli Structured Finance, Inc., February 24, 2014 (''Tavakoli Letter''); Letter from John Morgan, Securities Commissioner, Texas State Securities Board, March 21, 2014 (''TSSB Letter''); WDFI Letter.

[773] *See, e.g.,* ASD Letter; CFA Letter; Congressional Letter 4; Cornell Clinic Letter; Massachusetts Letter 1; NASAA Letter 2; ODS Letter; PRCFI Letter; WDFI Letter.

[774] *See, e.g.,* CFA Letter; Massachusetts Letter 1; NASAA Letter 2; PRCFI Letter; Tavakoli Letter; WDFI Letter.

[775] Pub. L. 104–290, 110 Stat. 3416 (Oct. 11, 1996).

[776] *See, e.g.,* ASD Letter; Karr Tuttle Letter; Congressional Letter 4; Massachusetts Letter 1; Massachusetts Letter 2; NASAA Letter 1; NASAA Letter 2; NDBF Letter; NYIPB Letter; ODS Letter; PRCFI Letter; Secretaries of State Letter; Tavakoli Letter; WDFI Letter.

[777] Rel. No. 33–8041 (Dec. 27, 2001) (the ''2001 Proposing Release'').

[778] *See, e.g.,* ASD Letter; CFA Letter; Congressional Letter 2; Congressional Letter 4; Groundfloor Letter; Massachusetts Letter 1; Massachusetts Letter 2; NASAA Letter 2; NDBF Letter; NYIPB Letter; Secretaries of State Letter; Tavakoli Letter; WDFI Letter.

[779] *See, e.g.,* CFA Letter; Groundfloor Letter; Massachusetts Letter 2; NASAA Letter 2; Scherber Letter; WDFI Letter.

[780] *See, e.g.,* CFA Letter; Massachusetts Letter 2; NASAA Letter 2; WDFI Letter.

[781] *See, e.g.,* NASAA Letter 1; ODS Letter; PRCFI Letter; WDFI Letter.

[782] *See, e.g.,* CFA Letter; CFA Institute Letter; MCS Letter; NASAA Letter 2; Scherber Letter; TSSB Letter; WDFI Letter.

[783] *See, e.g.,* ASD Letter; CFA Institute Letter; Cornell Clinic Letter; Groundfloor Letter; Karr Tuttle Letter; Massachusetts Letter 1; Massachusetts Letter 2; NASAA Letter 1; NASAA Letter 2; NASAA Letter 3; NYIPB Letter; PRCFI Letter; Secretaries of State Letter; Tavakoli Letter; TSSB Letter; WDFI Letter.

[784] ABA BLS Letter; Letter from Kendall Almerico, Crowdfunding Expert, Attorney and CEO, Fund Hub and ClickStartMe, February 11, 2014 (''Almerico Letter''); Andreessen/Cowen Letter; B. Riley Letter; BIO Letter; Campbell Letter; Canaccord Letter; CFIRA Letter 1; CFIRA Letter 2; Letter from Rep. David Schweikert, et al, U.S. House of Representatives, Sept. 25, 2014 (''Congressional Letter 3''); DuMoulin Letter (noting that Canadian issuers conducting simultaneous offerings in Canada would otherwise be subject to three levels of review); Letter from Stanley Keller, Edwards Wildman Palmer LLP, April 3, 2014 (''Edwards Wildman Letter'') (recommending defining ''qualified purchasers'' as ''accredited investors'' if the proposed preemption is not adopted); Letter from Daniel Eng, CEO, March 20, 2014 (''Eng Letter''); Fallbrook Technologies Letter; Gilman Law Letter; McCarter & English Letter; Guzik Letter 1 (*see also* Guzik Letter 2 (suggesting that if the proposed preemption is not adopted to consider adopting an accredited investor style definition for ''qualified purchaser,'' but with a lower income or net worth test)); Letter from Todd Hart, Aug. 20, 2014 (''Hart Letter''); Heritage Letter; Letter from Charles Huynh, February 24, 2014 (''Huynh Letter''); IPA Letter; Kisel Letter; Letter from Akbert P. Kretz, Ph.D., Founder/Manager, Mentor, March 11, 2014 (''Kretz Letter''); KVCF Letter; Ladd Letters; Leading Biosciences Letter; Letter from Bruce E. Methven, Securities Law Attorney, March 23, 2014 (''Methven Letter''); Milken Institute Letter; MoFo Letter; Letter from Donald R. Hancock, CEO, Moloney Securities Co., Inc., February 20, 2014 (''Moloney Letter''); Letter from Jason Akel, President, New Food Ventures LLC, March 12, 2014 (''New Food Letter''); OTC Markets Letter; Letter from Jesse J. Palomino, February 25, 2014 (''Palomino Letter''); Paul Hastings Letter; Public Startup Co. Letters; REISA Letter; Richardson Patel Letter; SBIA Letter; Letter from Bradley L. Staples, MBA, University of Utah, February 21, 2014 (''Staples Letter''); Letter from Chris Sugai, February 21, 2014 (''Sugai Letter''); SVB Financial Letter; SVGS Letter; Letter from Ryan Hawxhurst, Founder and CEO of Unorthodocs Printing LLC, February 21, 2014 (''Unorthodocs Letter''); U.S. Chamber of Commerce Letter; Letter from Gregory S. Fryer, Esq., Partner, Verrill Dana LLP, July 15, 2014 (''Verrill Dana Letter 2''); Letter from John Warren, Esq., February 24, 2014 (''Warren Letter''); WR Hambrecht + Co Letter.

• The proposed rules provide substantial investor protections to investors.[785]

• State securities law review of offering statements is a significant impediment to the use of Regulation A.[786]

• The Commission has the authority to preempt state qualification and review requirements.[787]

• States continue to have the authority to, among other things, bring anti-fraud enforcement actions and to review the publicly filed disclosure documents before sales occur.[788]

• NASAA's coordinated review program as implemented will remain inefficient due to internal conflict, the application of merit review standards and the program's inability to bind participants in the event of disagreements among the states.[789]

Many commenters that expressed general support for preemption, as proposed, also recommended applying it on an expanded basis.[790] Some commenters recommended preempting state regulation of secondary trading in Regulation A securities,[791] and some recommended preempting state regulation of Tier 1 offerings.[792]

Alternatively, several commenters recommended possibly eliminating the Commission's review of Regulation A offerings to varying extents.[793] Two commenters recommended eliminating the Commission's review of Tier 1 offerings.[794] One of these commenters recommended only doing this for offerings that are ''local'' in nature.[795] One commenter recommended having a single state review, in lieu of a review and qualification by the Commission, if the Commission's staff is unwilling to review Regulation A offerings ''promptly with content-appropriate standards.'' [796] One commenter recommended completely eliminating the Commission's review if NASAA's coordinated review program promotes a ''robust'' Regulation A market.[797]

3. Final Rules

For the reasons discussed below, we are adopting the ''qualified purchaser'' definition in Regulation A, substantially as proposed. In the final rules, a ''qualified purchaser'' for purposes of Section 18(b)(4)(D)(ii) of the Securities Act includes any person to whom securities are offered or sold in a Tier 2 offering. Because of the requirements for all Tier 2 offerings, all purchasers in Tier 2 offerings persons must be either accredited investors or persons who limit their investment amount to no more than 10% of the greater of annual income or net worth (for natural persons), or 10% of the greater of annual revenue or net assets at fiscal year end (for non-natural persons).

To address commenter concerns and avoid potential confusion as to the application of the preemption provisions in Tier 1 offerings, the final definition of ''qualified purchaser'' does not include offerees in Tier 1 offerings. While the final rules permit Regulation A issuers to test the waters and make offers in the pre-qualification period at the federal level, in light of the concerns raised by state regulators about the proposed rule's expanded use of solicitation materials [798] and what we anticipate to be the generally more local nature of Tier 1 offerings,[799] we believe it is appropriate, in this context, for the states to retain oversight over how these offerings are conducted. Although we acknowledge that this could potentially inhibit the use of solicitation materials in certain Tier 1 offerings, for these smaller, more localized offerings, we think the states should be permitted to regulate the use of solicitation materials.

Given the sharply divided views of commenters on the ''qualified purchaser'' definition included in the Proposing Release, we want to clarify the scope of the Commission's authority under the Securities Act to define such a term and the effect the final qualified purchaser definition will have on the continued ability of the states to regulate offers and sales within their jurisdiction. We continue to believe that the substantial investor protections embedded in the final rules for Tier 2 offerings, including the requisite qualifications of the issuer, offering, and eventual purchasers, as well as the particular characteristics associated with this category of securities, support the limited preemption of state securities laws registration and qualification requirements adopted in the final rules.

a. NSMIA and the JOBS Act

As noted above, some commenters questioned the ability of the Commission to adopt a ''qualified purchaser'' definition that includes any person to whom securities are offered or sold in a Tier 2 offering.[800] These commenters suggested that a qualified purchaser definition under Section 18(b)(3) of the Securities Act must be based on attributes of the purchaser, not the nature of the issuer or offering. These commenters stated that broad preemption was contemplated in the legislative history of Title IV of the JOBS Act and expressly rejected by Congress.

[785] *See, e.g.,* ABA BLS Letter; Almerico Letter; B. Riley Letter; Campbell Letter; Canaccord Letter; CFIRA Letter 1; Congressional Letter 3; Edwards Wildman Letter; Fallbrook Technologies Letter; Gilman Law Letter; Guzik Letter 1; Guzik Letter 2; KVCF Letter; Leading Biosciences Letter; Milken Institute Letter; MoFo Letter; OTC Markets Letter; Paul Hastings Letter; Richardson Patel Letter; Verrill Dana Letter 2; WR Hambrecht + Co Letter.

[786] *See, e.g.,* ABA BLS Letter; Almerico Letter; BIO Letter; Campbell Letter; Canaccord Letter; Congressional Letter 3; DuMoulin Letter; Edwards Wildman Letter; Fallbrook Technologies Letter; Gilman Law Letter; Guzik Letter 1; Guzik Letter 2; Kisel Letter; Kretz Letter; KVCF Letter; Ladd Letters; Leading Biosciences Letter; McCarter & English Letter; Milken Institute Letter; Moloney Letter; OTC Markets Letter; Paul Hastings Letter; REISA Letter; Richardson Patel Letter; SBIA Letter; Staples Letter; SVB Financial Letter; U.S. Chamber of Commerce Letter; Verrill Dana Letter 2.

[787] *See, e.g.,* ABA BLS Letter; BIO Letter; Campbell Letter; Edwards Wildman Letter; Guzik Letter 1; Heritage Letter; IPA Letter; KVCF Letter; Public Startup Co. Letters; Richardson Patel Letter; U.S. Chamber of Commerce Letter; Verrill Dana Letter 2.

[788] *See, e.g.,* Congressional Letter 3; Heritage Letter; KVCF Letter; Methven Letter; REISA Letter.

[789] *See, e.g.,* ABA BLS Letter; BIO Letter; Canaccord Letter; Congressional Letter 3; Edwards Wildman Letter; Guzik Letter 2; KVCF Letter; Ladd Letters; Milken Institute Letter; Paul Hastings Letter; REISA Letter; Richardson Patel Letter; SVB Financial Letter; Verrill Dana Letter 2.

[790] ABA BLS Letter; Campbell Letter; Congressional Letter 3; Guzik Letter 1; Hart Letter; Heritage Letter; IPA Letter; KVCF Letter; Ladd Letter 2; Milken Institute Letter; OTC Markets Letter; Paul Hastings Letter; Public Startup Co. Letter 1; SVB Financial Letter.

[791] ABA BLS Letter; IPA Letter (recommending preempting for resales of all securities of a Tier 2 issuer that is current in Regulation A reporting); KVCF Letter; OTC Markets Letter (recommending preemption for at least Regulation A securities that are not penny stocks); Paul Hastings Letter; SVB Financial Letter.

[792] Andreessen/Cowen Letter; Campbell Letter; Congressional Letter 3; Guzik Letter 1 (recommending preemption with audited financial statements and a substantially lighter disclosure regime compared to Tier 2); Heritage Letter; Ladd Letter 2 (recommending preemption if company adopts internal controls and meets continuing disclosure requirements, including yearly audited financials); Milken Institute Letter (recommending preemption if audited financial statements are included in the ''initial filing''); Public Startup Co. Letter 1; SVB Financial Letter (recommending preemption with additional, unspecified disclosure obligations). *See* Section II.I. below for additional recommended changes to Tier 1.

[793] Groundfloor Letter; Ladd Letter 2; Public Startup Co. Letter 5; Verrill Dana Letter 2.

[794] Ladd Letter 2; Public Startup Co. Letter 5.

[795] Public Startup Co. Letter 5.

[796] Verrill Dana Letter 2.

[797] Groundfloor Letter.

[798] Massachusetts Letter 2; NASAA Letter 2; WDFI Letter. These commenters suggested that the Commission require the filing of solicitation materials before the time of first use, as, in their view, the antifraud and other civil liability provisions of the federal securities laws are not an adequate substitute for the investor protections afforded by an advance filing requirement for solicitation materials, while also noting that problems with the use of solicitation materials are compounded by the provisions for access equals delivery of final offering circulars.

[799] *See* Section II.H.3.d. below; *see also* fn. 830 below.

[800] *See* fn. 772 above.

Title I of the NSMIA, referred to as the ''Capital Markets Efficiency Act of 1996'' (the ''Efficiency Act''),[801] was, as its name suggests, enacted to promote efficiency and capital formation in the financial markets.[802] The Efficiency Act realigned the respective responsibilities of federal and state securities regulators in the context of the dual system of securities offering registration that existed before enactment of the statute.[803] The Efficiency Act achieved this regulatory realignment by amending Section 18 of the Securities Act to provide for exemption from state law registration and qualification requirements for certain categories of securities, defined as ''covered securities.''

Section 18(b)(3) provides that ''[a] security is a covered security with respect to the offer or sale of the security to qualified purchasers, as defined by the Commission by rule.'' Congress stated in Section 18(b)(3) that the Commission may ''define the term 'qualified purchaser' differently with respect to different categories of securities, consistent with the public interest and the protection of investors.'' The JOBS Act[804] amended Section 18 by adding to its list of ''covered securities'' transactions involving securities that are exempt from registration pursuant to a rule or regulation adopted pursuant to Section 3(b)(2) and that are ''offered or sold to a qualified purchaser, as defined by the Commission pursuant to [Section 18(b)(3)] with respect to that purchase or sale.''[805]

By its terms, Section 18(b)(3) provides the Commission with the express authority to adopt rules that define a ''qualified purchaser.'' The provision does not prescribe specific criteria that the Commission must consider in determining, or the manner in which it must determine, a purchaser to be ''qualified.'' Furthermore, Section 18(b)(3) states that the definition of qualified purchaser may be different for different categories of securities. This means that, rather than considering the characteristics of the purchaser in isolation, the Commission may adopt a qualified purchaser definition that is also tailored to reflect the characteristics of the particular type of issuer or transaction. Further, Section 18(b)(3) does not proscribe any particular terms or characteristics that the Commission must include in any rules defining qualified purchaser with respect to a given category of securities. What it does instead is require that any rules so adopted be consistent with the public interest and the protection of investors.

Unlike Section 18(b)(3), which provides for preemption with respect to offers or sales to qualified purchasers in any context, Section 18(b)(4)(D)(ii) provides for preemption specifically with respect to transactions exempt from registration pursuant to Section 3(b)(2). As such, the preemption afforded under Section 18(b)(4)(D)(ii) necessarily encompasses the mandatory requirements for conducting an exempt offering pursuant to Section 3(b)(2). These include, among other things, that the civil liability provisions of Section 12(a)(2) must apply and that an issuer must file audited financial statements with the Commission annually.[806] Other potential requirements left to the discretion of the Commission include provisions for ongoing reporting, bad actor disqualification, and requirements for electronic filing of offering materials.[807]

We believe that the terms of Section 18(b)(3) and Section 18(b)(4)(D)(ii)—read in conjunction—provide the Commission with discretionary authority to adopt a ''qualified purchaser'' definition that reflects the particular characteristics of transactions exempt from registration pursuant to Section 3(b)(2). Thus, in determining who should be considered a qualified purchaser for purposes of the amendments to Regulation A, we have considered not only the mandatory features of Section 3(b)(2), but also many of the discretionary features contained in our final rules, such as the requirement that purchasers in Tier 2 offerings be limited to accredited investors or persons otherwise subject to specified investment limitations.

We recognize that a number of commenters disagreed with this approach.[808] Some stated that a ''qualified purchaser'' definition adopted by the Commission must at a minimum be based on attributes of the purchaser, such as a person's wealth, income, or sophistication,[809] and noted that the Commission had highlighted such factors in a 2001 Proposing Release to define a ''qualified purchaser'' pursuant to Section 18(b)(3).[810] The 2001 Proposing Release, however, contemplated that state securities review and qualification requirements would be preempted in all categories of transactions to the extent that sales were made to ''accredited investors.'' By contrast, our rules to implement Title IV of the JOBS Act provide for preemption in the more limited circumstances in which the requirements of Section 3(b)(2) and the rules adopted thereunder are satisfied.

In the 2001 Proposing Release, we noted that certain aspects of NSMIA's legislative history suggest that a qualified purchaser definition should include investors that are sophisticated and capable of protecting themselves. In addition, we asked questions about the proposed approach to the definition and whether other potential factors mentioned in the legislative history, such as the national character of an offering, could or should bear on potential qualified purchaser definitions adopted pursuant to Section 18(b)(3).[811]

We do not believe that the 2001 Proposing Release is inconsistent with the qualified purchaser definition for Regulation A that we are adopting today. The 2001 Proposing Release was not a Commission statement on the scope of all permissible definitions for a qualified purchaser adopted pursuant to Section 18(b)(3). Rather, it expressed a preliminary interpretive view of certain aspects of the legislative history of NSMIA in the context of a proposed rulemaking that would have equated ''qualified purchaser'' with the definition of an ''accredited investor'' for sales by any category of issuer in any type of transaction.[812] While it may have been appropriate to focus on attributes of the purchaser when crafting a ''qualified purchaser'' definition that would have applied in a broad set of possible transactions, as in the 2001

[801] NSMIA, section 101 (Short Title).

[802] H.R. Rep. No. 622, 104th Cong. 2d Sess. at 1 (1996) (House Report).

[803] As enacted, NSMIA included five separate titles, each of which served a different purpose in the overarching statutory goal of improving national securities markets. *See* preamble and Section 1 to NSMIA.

[804] The stated purpose of the JOBS Act is to ''increase American job creation and economic growth by improving access to the public capital markets. . . .'' *See* JOBS Act (Preamble).

[805] JOBS Act section 401(b) (adding Section 18(b)(4)(D)(ii) to the Securities Act). Section 401(b) also included in the list of ''covered securities'' transactions involving Section 3(b)(2) securities that are offered or sold on a national securities exchange, *see* Section 18(b)(4)(D)(i). *See also* Title III of the JOBS Act, which added to the list of ''covered securities'' in Section 18(b)(4)(C) transactions involving securities issued pursuant to Section 4(a)(6).

[806] 15 U.S.C. 77c(b)(2)(D), (F).

[807] *See* 15 U.S.C. 77c(b)(2)(G); 15 U.S.C. 77c(b)(4).

[808] *See* fn. 772 above.

[809] *See, e.g.,* NASAA Letter 2.

[810] 2001 Proposing Release. In this release, the Commission proposed to define a ''qualified purchaser'' to be an ''accredited investor,'' as that term is defined under Rule 501(a) of Regulation D.

[811] *See* 2001 Proposing Release, Section II.B. (for example, asking questions about the national character of offerings and the potential for eliminating redundancies and inefficiencies in the application of disparate state standards); *see also* House Report, at 31.

[812] *See* 2001 Proposing Release, Section I.C., II.B. The Commission did not adopt final rules based on the 2001 Proposing Release.

Proposing Release, the definition being adopted today serves a different purpose because it applies only in Regulation A offerings. Indeed, Section 18(b)(3) contemplates that the term ''qualified purchaser'' can be defined ''differently with respect to different categories of securities.''

The enactment of the JOBS Act in 2012, and in particular its addition of Section 18(b)(4)(D)(ii) to the Securities Act has caused us to consider the definition of qualified purchaser specifically within the context of transactions under the new Section 3(b)(2) exemption. This is a new and different context in which to consider the definition of qualified purchaser than existed at the time of the 2001 Proposing Release. In this new context, we believe that the definition of qualified purchaser that we are adopting is appropriately tailored to these transactions because, as explained above, the requirements applicable to Tier 2 offerings include numerous provisions designed to protect investors, including, among other things, a requirement that all purchasers in these offerings be either accredited investors or persons who are subject to investment limitations.

We do not agree with the commenters who assert that broad state securities law preemption was expressly rejected by Congress in Title IV of the JOBS Act. The legislative record indicates that the only form of state securities law preemption directly contemplated, but not adopted, in the drafting of Title IV of the JOBS Act was for offers and sales through a broker or dealer.[813]

b. Section 18 of the Securities Act and the Effect of Preemption on State Securities Laws

As discussed above, some commenters expressed concern about the effect preemption would have on the ability of state securities regulators to remain actively involved in Regulation A offerings.[814] We believe it is important to clarify the effect preemption will have on the ability of state securities regulators to continue to play a vital role in the supervision of Regulation A securities.

Under Section 18(a) of the Securities Act, no law, rule or regulation of any state requiring the registration or qualification of securities applies to a covered security or to a security that will be a covered security upon completion of the transaction.[815] Further, with respect to a covered security, no state law, rule or regulation shall prohibit, limit, or impose, among other things, any conditions upon the use of any offering document[816] that is prepared by or on behalf of the issuer, or, based on the merits of such offering or issuer, upon the offer or sale of any covered security.[817]

While covered security status under Section 18 prohibits the states from requiring the registration or qualification of such securities, Section 18(c) preserves the power of the states in several important areas.[818] Under Section 18(c), the states retain:

- The jurisdiction to investigate and bring enforcement actions with respect to fraudulent securities transactions and unlawful conduct by broker-dealers;[819]
- the ability to require issuers to file with the states any document filed with the Commission, solely for notice purposes and the assessment of fees, together with a consent to service of process and any required fee;[820] and
- the power to enforce the filing and fee requirements by suspending the offer or sale of securities within a given state for the failure to file or pay the appropriate fee.[821]

As the name of the statute that added Section 18 to the Securities Act suggests, the preemption of state securities laws is about improving the ''efficiency'' of our capital markets by eliminating unnecessary, duplicative regulation of securities offerings at both the federal and state level.[822] It is not about eliminating investor protections or otherwise limiting the continued involvement of the states in such offerings.[823]

c. State Coordinated Review Program for Section 3(b)(2) Securities

Since the proposed rules to implement Title IV of the JOBS Act were issued in December 2013, NASAA has implemented a multi-state coordinated review program for Regulation A offerings, the goal of which is to reduce the state law disclosure and compliance obligations of Regulation A issuers.[824] Under the coordinated review program, issuers are required to file Regulation A offering materials with the states via electronic mail. The administrator of the coordinated review program must then select a lead disclosure examiner and, where applicable, a lead merit examiner, which are responsible for drafting and circulating comment letters to the participating jurisdictions, and for seeking resolution of those comments with the issuer and its counsel. As enacted, the program contemplates a twenty-one business day turnaround from the time of filing of an offering statement until the issuer receives comments from the states.[825] The coordinated review program's review protocol also modifies (or disapplies altogether) certain of NASAA statements of policy for offerings undergoing coordinated review. Where, however, an issuer elects to offer or sell Regulation A securities in at least one merit state, the coordinated review program may require the issuer to apply NASAA's statements of policy to the offering as a whole (*i.e.,* not solely for purposes of offers or sales within such merit review state(s)).

At the proposing stage, we indicated that a number of open questions remained about the then-proposed multi-state review program. In the intervening time, many questions have been answered, largely relating to the final adoption and implementation of

[813] *See, e.g.,* Congressional Record Volume 157, Number 166 (Wednesday, Nov. 2, 2011), p. 7231 (Statement of Rep. Peters: ''Finally, the gentleman [Rep. Schweikert (AZ)] has also worked with Democrats on the remaining issue of contention, and that was the preemption of State law. [Rep. Schweikert's] substitute amendment to H.R. 1070 removes the exemption from State level review that was previously provided to an issuer using a broker-dealer to distribute and [sic] issue.'') *Cf.* H.R. Rep. No. 112–206, at 2 (2011).

[814] *See, e.g.,* NASAA Letter 2, at 10.

[815] 15 U.S.C. 77r(a)(1).

[816] Under Section 18(d), the term ''offering document'' has the same meaning given the term ''prospectus'' in first portion of section 2(a)(10) and includes a communication that is not deemed to offer a security pursuant to a rule of the Commission. For these purposes, the term ''prospectus'' means any prospectus, notice, circular, advertisement, letter, or communication, written or by radio or television, which offers any security for sale or confirms the sale of any security.

[817] 15 U.S.C. 77r(a)(2)–(3).

[818] 15 U.S.C. 77r(c).

[819] 15 U.S.C. 77r(c)(1).

[820] 15 U.S.C. 77r(c)(2). For example, even though state securities law registration requirements are preempted in offerings pursuant to Rule 506 of Regulation D, 17 CFR 230.506, many states continue to require the filing of Form D notices and amendments, and most of them charge a filing fee. *See, e.g., https://www.efdnasaa.org*; *cf.* 15 U.S.C. 77r(b)(4)(E).

[821] 15 U.S.C. 77r(c)(3).

[822] House Report, at 1.

[823] *Id.,* at 16 (Noting the reason behind the legislation that eventually became NSMIA was a clear need for modernization and that ''there continues to be a substantial degree of duplication between Federal and State securities regulation, and that this duplication tends to raise the cost of capital to American issuers of securities without providing commensurate protection to investors or our markets.'').

[824] A description of NASAA's coordinated review program can be found at: *http://www.nasaa.org/industry-resources/corporation-finance/coordinated-review/regulation-a-offerings/*. The Proposing Release also discusses this program, as it was contemplated and proposed at that time. *See* Proposing Release, at Section II.H.

[825] An illustrated timeline for NASAA's multi-state coordinated review program is available at: *http://www.nasaa.org/wp-content/uploads/2015/03/Coordinated-Review-Chart.pdf.*

the program by a vast majority of the states.[826] Other crucial questions, however, remain, such as whether the program will be able to address the concerns related to state securities law compliance identified by the GAO Report and commenters,[827] and whether the program can continue, as contemplated, in the face of numerous filings by issuers that seek to participate in the streamlined process. As of the date of this release, we are aware of three issuers that have elected to seek qualification at the state level pursuant to the protocols of the multi-state coordinated review program.[828] While the program, as contemplated in its enactment, could potentially reduce the state law disclosure and compliance obligations of issuers,[829] the limited experience of issuers with the program prevents us from being able to fully evaluate it at this time. We note that Tier 1 issuers may well benefit from the coordinated review program as it continues to develop. We remain concerned, however, that, even under the coordinated review program, state securities law registration and qualification requirements would be unnecessarily duplicative for, and impose unnecessary costs on, securities issued in Tier 2 offerings. In light of the recent efforts of state securities regulators to address concerns about the costs associated with state qualification of Regulation A offering statements, however, the ongoing implementation and development of the coordinated review program, particularly as it may operate within Tier 1 offerings, may provide additional data that will aid any future evaluation of whether such a program could effectively operate within the context of larger, more national Tier 2 offerings as an alternative to preemption.

d. Application of State Securities Law in Tier 1 and Tier 2 Offerings

As we noted in the Proposing Release, in light of the issues raised by commenters and in the GAO report, we remain concerned that costs associated with state securities law compliance, even under a coordinated review program, may deter issuers from using amended Regulation A, which could significantly limit the impact of the exemption as a tool for capital formation. In considering our approach to preemption in the final rules, particularly as we evaluate what is consistent with the public interest and the protection of investors, we have taken into account the amended Regulation A regime, including the distinctions between the two tiers and in particular the additional protections provided in Tier 2 beyond the requirements of Tier 1.

In addition to certain basic requirements that are applicable to both tiers, Tier 2 issuers will be subject to significant additional requirements, some arising directly from Section 3(b)(2) and others that we have imposed through our discretionary authority under that section. For example, the financial statements that Tier 2 issuers include in their offering circulars are required to be audited, and Tier 2 issuers must file audited financial statements with the Commission annually. Tier 2 issuers also must provide ongoing reports on an annual and semiannual basis with additional requirements for interim current event updates, assuring a continuous flow of information to investors and the market. In addition, purchasers in Tier 2 offerings must be either accredited investors or subject to limitations in the amount they may invest in a single offering. Finally, as with Tier 1 offerings, Tier 2 offering statements will be filed electronically, reviewed and qualified by Commission staff, and the offerings are subject to both limitations on eligible issuers and ''bad actor'' disqualification provisions. In consideration of these requirements, as well as our view, as discussed in greater detail below, that Tier 2 offerings are more likely to be national rather than local in nature, we believe that preemption of state securities law registration and qualification requirements is appropriate for purchasers in these offerings.

We believe that the final rules for Regulation A create two different categories of securities for purposes of Section 18(b)(3). The requirements for Tier 1 issuers create a category of securities that is more local in character, while Tier 2 offerings involve a category of securities that is more national in character. In this regard, to the extent an issuer seeks to raise money through a public offering pursuant to Regulation A, the distinctions between the requirements for Tier 1 and Tier 2 will provide issuers with a meaningful choice at the outset between initial and ongoing offering costs and requirements.

Tier 1 issuers are not required to include audited financial statements in their offering statements, nor are they required—as contemplated by Section 3(b)(2)—to file audited financial statements with the Commission annually. They are further not subject to any ongoing reporting, beyond the requirements contained in Part I of Form 1–Z. While the final rules raise the offering limitation in Tier 1 to $20 million in a 12-month period, which we believe should increase the general utility of the tier, such offerings by virtue of the lower dollar amounts that can be raised in comparison to Tier 2 offerings, as well as the form filing requirements and the lack of ongoing reporting, will likely be conducted by a different set of issuers than those that conduct offerings pursuant to Tier 2. Specifically, we think that issuers conducting Tier 1 offerings are likely to be smaller companies whose businesses revolve around products, services, and a customer base that will more likely be located within a single state, region, or a small number of geographically dispersed states.[830] We believe that these issuers will typically not seek or, on the basis of their business models, be able to: (i) Raise capital on a national scale; or (ii) create a secondary trading market in their Regulation A securities.

By contrast, we believe that the higher offering limitation for Tier 2 offerings, the higher costs associated with complying with the audited financial statement and ongoing reporting requirements, as well as the requirement to sell to ''accredited investors'' or otherwise limit the amount of securities sold to non-accredited investors, will necessitate that such offerings be offered and sold on a larger and more national scale. Additionally, an issuer electing to conduct a Tier 2 offering would likely do so, or be required by its investors to do so, in order to provide ongoing reports in a manner that will facilitate, or otherwise result in, secondary trading on a national level. While issuers conducting Regulation A offerings for less than $20 million are free to choose between the requirements of either tier, we believe that the initial and ongoing costs and limitations associated with

[826] At this time, it is our understanding that 49 of NASAA's 53 constituent members have agreed to participate in the coordinated review program.

[827] *See, e.g.,* GAO–12–839, at 14 (discussing the varying standards and degrees of stringency applied during the qualification and review process in merit review states); *see also, e.g.,* ABA BLS Letter, at 14.

[828] *See, e.g.,* Groundfloor Letter (the first issuer to rely on NASAA's coordinate review program, with the exception of having to seek qualification outside of the coordinated review program in the state of Georgia).

[829] *Id.* (suggesting that in its experience the benefits of NASAA's coordinated review program outweighed the approximately $50,000 cost of the average Regulation A offering); *see also* NASAA Letter 3.

[830] For example, issuers of securities in the seven offering statements qualified by the Commission pursuant to Regulation A in 2014 indicated, on average, that they were seeking qualification in approximately five states per offering. The financial statements provided by these issuers further indicated, on average, that issuers had approximately $1.2 million in assets. No issuer indicated assets greater than $3.6 million, while two issuers indicated assets of less than $20,000.

complying with Tier 2 will provide for the natural separation of offerings into the respective tiers with issuers in more local offerings electing to comply with the less onerous requirements of Tier 1.

As noted above, some of the basic requirements of the offering statement are applicable to both tiers, and issuers of securities pursuant to either tier will remain subject to the same review and comment process by the staff of the Division of Corporation Finance before qualification. On this basis, some commenters argued that the same reasons supporting the preemption of state securities law registration requirements for Tier 2 offerings suggests that the Commission should also extend preemption to Tier 1 offerings.[831]

The distinctions between the tiers in the final rules for purposes of the preemption of state securities law registration requirements are based only in part on the form distinctions and process requirements for issuers at the time of qualification at the federal level. The preemption of state securities law registration requirements in the final rules for Tier 2 offerings is additionally related to the inefficiencies of qualification at the state and federal level, the differing characteristics of Tier 1 and Tier 2 offerings, and the statutory purposes behind the enactment of the Efficiency Act that are served by deeming Tier 2 offerings to involve a covered class of securities.

While, as some commenters suggest, the review and qualification of Tier 1 offerings at the state level will involve inefficiencies to which Tier 2 issuers will not be subject, we believe that continued state involvement in Tier 1 offerings is consistent with the policy underlying the enactment of NSMIA that suggests that states should ''generally retain their authority to regulate small, regional, or intrastate securities offerings.'' [832] As noted above, we believe that the implementation of NASAA's multi-state coordinated review program has the potential to ameliorate some of these inefficiencies. We will observe issuers' experience under the coordinated review program and amended Regulation A, and whether changes to the rule could be beneficial. We also believe that the requirements for Tier 2 offerings will advance ''the development of national securities markets and eliminate the costs and burdens of duplicative and unnecessary regulation.'' [833] The absence of preemption in Tier 2 offerings would unnecessarily subject issuers in such offerings to a substantial degree of duplication between federal and state securities regulation in the qualification of offering statements, which would raise the cost of capital to issuers without providing commensurate additional protection to investors or our markets.[834]

As noted above, under Section 18(c), the states retain authority to (1) investigate and bring enforcement actions with respect to fraudulent transactions, (2) require the filing of any documents filed with the Commission ''solely for notice purposes and the assessment of any fee,'' and (3) enforce filing and fee requirements by suspending offerings within a given state. We see no reason why state securities regulators could not continue to rely on the multi-state coordinated review program as a mechanism to allow Tier 2 issuers to make notice filings of their offering statements with the states consistent with Section 18(c). In this regard, notice filings of offering statements of Tier 2 issuers would be available to the states for a period of time prior to the qualification of the offering.[835] For example, the final rules for Regulation A require an issuer that non-publicly submits its offering statement for review to the Commission to publicly file its offering statement and related documents with the Commission not less than 21 calendar days before qualification. At that time, the states would be permitted to require issuers to also make notice filings of such materials with them and to assess any filing fees under Section 18(c)(2).

I. Additional Considerations Related to Smaller Offerings

As we noted in the Proposing Release, a number of factors have influenced the use of Regulation A in the form it has taken since its last substantive update in 1992, including the process of filing the offering statement with the Commission, state securities law compliance, the types of investors businesses seek to attract, and the cost-effectiveness of Regulation A relative to other exemptions.[836] In developing the final rules we are adopting, we have attempted to create a more efficient and effective method to raise capital under Regulation A that incorporates important investor protections. We are also cognizant of how issuers seeking to raise relatively smaller amounts of capital could consider a range of possible approaches to capital raising.[837]

Under our proposal, offerings for up to $5 million conducted under Tier 1 would benefit from the proposed updates to Regulation A's filing and qualification processes, but the proposed amendments did not otherwise substantially alter the existing exemption for such offerings.[838] We were mindful of the possibility that additional changes to Tier 1 could expand its use by, and thus potentially benefit, issuers conducting smaller offerings. We therefore solicited

[831] Andreessen/Cowen Letter; Campbell Letter; Guzik Letter 1; Heritage Letter; Ladd Letter 2; Milken Institute Letter; Public Startup Co. Letter 1; SVB Letter.

[832] House Report, at 16. *See also* WDFI Letter, at 3 (''Given the relatively small size of these offerings and the low probability of attracting the attention of national broker-dealers to distribute them, these offerings are likely to be local in nature.''). The Commission is exploring the possibility of establishing a program whereby a representative of NASAA, or of a state securities regulator, would be assigned to work at the Commission in the Division of Corporation Finance to assist the staff as it implements the final rules.

[833] House Report, at 16. While further preemption of state securities law regulation of the secondary trading of Regulation A securities issued in a Tier 2 offerings could, as some commenters suggest, further advance the development of a national securities market by easing the compliance obligations of investors that trade in the secondary markets, we believe that the approach to preemption of state securities laws adopted today is more appropriate at the outset and will afford the Commission time to subsequently review the development of, and consider potential changes to, the final rules for primary and secondary Regulation A markets.

[834] *See id.; see also, e.g.,* ABA BLS Letter, at 13 (noting the challenges posed to smaller companies that arise when having to respond to both federal and state reviews and coordinating overlapping or potentially inconsistent comments and approvals); Groundfloor Letter (noting the existence of, and additional costs associated with, duplicative qualification requirements at the state and federal level, as well as potential complications between investment limitations at the federal level and state suitability standards).

[835] *See, e.g.,* comment letters cited in fn. 788 above; *see also* Letter from A. Heath Abshure, President, NASAA, September 27, 2013 (comments on SEC. Rel. No. 33–9416 (Proposed Amendments to Regulation D, Form D and Rule 156 under the Securities Act)) (indicating that although ''states are preempted from requiring registration of securities that are sold in compliance with Rule 506 . . . state regulators routinely review Form D filings to ensure that the offerings actually qualify for an exemption . . . and to look for ''red flags'' that may indicate a fraudulent offering. The absence of a Form D filing complicates our efforts to protect the investing public.''). The concerns of the states, as they relate to Form D filings, would be addressed in the final rules for Regulation A that require the filing with the Commission of substantive offering materials, thereby triggering any notice filing requirements with the states, before sales can be made.

[836] *See, e.g.,* Proposing Release, at Section I.C.; *see also* GAO Report.

[837] These methods include, for example, Rules 504, 505 and 506 under Regulation D and Section 4(a)(6) of the Securities Act and any rules adopted thereunder. *See also* Proposing Release, at Section II.I.

[838] Some commenters at the pre-proposal stage suggested that the Commission should largely preserve the requirements of the then-existing Regulation A in the final rules. *See* Proposing Release, at fn. 505.

comment on additional considerations with respect to Tier 1 and a potential intermediate tier for offerings incrementally larger than Tier 1 offerings and how such offerings would affect investor protection and capital formation.

Many commenters recommended making changes to proposed Tier 1 to make it a more viable option for small business capital formation.[839] Some of these commenters recommended preempting state regulation of Tier 1 offerings, as mentioned above.[840] Two commenters recommended raising the offering limit of Tier 1 to $10 million or more.[841] Several commenters recommended including an ongoing disclosure requirement for Tier 1 issuers, including disclosure at a level lower than what is required for Tier 2,[842] ongoing disclosure with yearly audited financials,[843] or some unspecified continuous disclosure obligation.[844] One commenter recommended lowering the Tier 1 disclosure obligations from the current proposed requirements, particularly for offerings of $2 million or less.[845] One commenter recommended expanding the offering limit for Tier 1 to $15 million and creating a new tier below Tier 1 with fewer disclosure requirements.[846] Many commenters recommended changes to proposed Tier 1, but did not address preemption.[847] Several of these commenters made recommendations with respect to the financial statement and auditing requirements in Form 1–A.[848]

The final rules for Regulation A take into account some of the suggestions by commenters on ways to improve the requirements for smaller offerings, particularly in Tier 1. The comments we received did not reflect any consensus on the particular provisions in Tier 1 that were most in need of amendment. As noted above, we do not agree that preemption of state securities laws registration and qualification requirements is appropriate for Tier 1 offerings.[849] Further, while some commenters suggested that preemption of state securities laws may improve the attractiveness of Tier 1 offerings, they did so on the condition that other aspects of the tier should change accordingly, such as by requiring Tier 1 issuers to provide audited financial statements in the offering statement and possibly on an ongoing basis. For the reasons discussed in Section II.C.3.b(2)(c) above, however, we have not adopted such changes in Tier 1. Alternatively, some commenters suggested that the Commission adopt a third tier either expressly or through the flexible applicability of the proposed tier requirements. While a third tier may provide issuers with some additional flexibility for capital formation under Regulation A, this additional flexibility would also have potential costs. For example, a third tier may unnecessarily complicate compliance with Regulation A for smaller issuers, and could potentially confuse investors as to the type of Regulation A offering an issuer was undertaking and the type of information such investor could expect to receive as a result, thereby lessening the viability of the exemption as a whole. For this reason, we are not adopting a third or intermediate tier in Regulation A.

We are adopting certain changes in the final rules that are intended to make Tier 1 more useful for small business capital formation. As discussed above, in line with the suggestions of commenters, we have raised the offering limitation in Tier 1 to $20 million in a 12-month period, including no more than $6 million on behalf of selling securityholders that are affiliates of the issuer.[850] With respect to the offering circular narrative disclosure requirements,[851] we have adopted certain additional scaled disclosure requirements for Tier 1 that are intended to lessen the compliance obligations for issuers. For example, Tier 1 issuers will be required to disclose related party transactions at the thresholds in current Regulation A, as opposed to the lower thresholds in the proposed rules, and simplified executive compensation data. We are further providing issuers under both Tiers with the accommodation provided to emerging growth companies in Securities Act Section 7(a) to delay the implementation of new accounting standards to the extent such standards provide for delayed implementation by non-public business entities. Lastly, we have provided Tier 1 issuers with additional flexibility with respect to auditor independence standards. As originally proposed, an issuer electing to provide audited financial statements in a Tier 1 offering—even though audited financial statements would not generally be required—would have had to engage the services of an auditor that followed the independence standards outlined in Article 2 of Regulation S–X. Commenters suggested that we should permit auditors of the financial statements of Tier 1 issuers to alternatively follow the independence standards of the AICPA or Article 2 of Regulation S–X.[852] In the view of these comments, allowing auditors of Tier 1 issuer financial statements the option to follow the independence standards of the AICPA would permit more issuers to include financial statements that would be deemed audited under the requirements for Tier 1 in the first instance, thereby avoiding any fees associated with an issuer having their existing financial statements audited a second time under PCAOB standards. As noted above,[853] we agree with commenters that this accommodation may benefit smaller issuers in Tier 1 offerings who wish to file audited final statements for purposes of the offering statement and thus are adopting this suggestion.

In the light of the changes discussed above, we believe that the final rules we are adopting will provide Tier 1 issuers with a meaningful choice within Regulation A between the costs and benefits associated with compliance with the requirements for Tier 1 and Tier 2 and therefore do not believe that an intermediate or other tier is necessary at this time.

[839] Andreessen/Cowen Letter; BDO Letter; Letter from Kevin Bernard, Sept. 3, 2014 (''Bernard Letter''); Campbell Letter; CAQ Letter; Deloitte Letter; E&Y Letter; Guzik Letter 1; Heritage Letter; ICBA Letter; KPMG Letter; Ladd Letter 2; McGladrey Letter; Milken Institute Letter; Public Startup Co. Letter 1; SVB Financial Letter; Verrill Dana Letter 1; WR Hambrecht + Co Letter.

[840] Andreessen/Cowen Letter; Bernard Letter; Campbell Letter; Guzik Letter 1; Heritage Letter; Ladd Letter 2; Milken Institute Letter; Public Startup Co. Letter 1; SVB Financial Letter.

[841] Guzik Letter 1; ICBA Letter.

[842] Guzik Letter 1 (suggesting that Tier 1 ongoing disclosure requirements could parallel Tier 2's requirements, but without the requirement for semiannual reports).

[843] Ladd Letter 2.

[844] SVB Financial Letter.

[845] Campbell Letter.

[846] Public Startup Co. Letter 1. As mentioned in the relevant sections above, this commenter recommended three tiers based on offering size. The first tier could potentially only require state review and would be ''local'' in nature. This tier would include some form of ongoing reporting with the states, but not audited financials. Instead directors and officers would have to certify under penalty of perjury that the financial statements were accurate. The second tier would only require audited financial statements if they were otherwise available, would preempt state review and would require periodic reporting. This tier might allow for more flexibility with respect to auditor independence. The third tier would require more reporting than currently proposed for Tier 2 and would appear to require PCAOB-registered auditors.

[847] BDO Letter; CAQ Letter; Deloitte Letter; E&Y Letter; ICBA Letter; KPMG Letter; McGladrey Letter.

[848] BDO Letter; CAQ Letter; Deloitte Letter; E&Y Letter; KPMG Letter; McGladrey Letter.

[849] *See* Section II.H.3. above.

[850] *See* Section II.B.3.c. above.

[851] *See* Section II.C.3.b(1). above.

[852] BDO Letter; CAQ Letter; Deloitte Letter; E&Y Letter; KPMG Letter; McGladrey Letter.

[853] *See* Section II.C.3.b(2)(c). above.

J. Transitional Guidance for Issuers Currently Conducting Regulation A Offerings

While Regulation A has been used infrequently in recent years, there are issuers that are currently conducting, or that have filed offering statements, under the preexisting Regulation A rules. By way of transitional guidance, we are clarifying that issuers currently conducting sales of securities pursuant to a qualified Regulation A offering statement may continue to do so. Such offerings will be considered Tier 1 offerings after the effectiveness of the final rules. Qualified offering statements under the preexisting rules for Regulation A are, however, incompatible with the final requirements for Tier 2 offerings and, as discussed below, issuers that wish to transition to a Tier 2 offering will need to file a post-qualification amendment that satisfies the requirements for Tier 2.

Upon effectiveness of the final rules, issuers currently conducting Regulation A offerings under the preexisting rules must begin to comply with the final rules for Tier 1 offerings, including, for example, the requirement of electronic filing and the rules for post-qualification amendments, at the time of their next filing under Regulation A. Additionally, after effectiveness of the final rules, to the extent that issuers provided offering statements that were qualified using the Model A disclosure format of Part II of the Form 1–A, any subsequently required filing or amendment to such offering statement must be filed using a disclosure format that is permissible under the final rules for Tier 1 offerings. Model A will no longer be appropriate or permitted for post-qualification amendments of qualified offerings that pre-date effectiveness of the final rules. Lastly, an issuer that is offering securities pursuant to a qualified offering statement under the preexisting rules will, upon effectiveness of the final rules, no longer be required to file a Form 2–A, but instead be required to file a Form 1–Z with the Commission electronically upon completion or termination of the offering.

Issuers that are currently in the review process for the qualification of a Regulation A offering statement may continue to follow the preexisting rules for Regulation A until the effective date of the final rules. On or after the effective date, such an issuer will be required to comply with the final rules, including the requirements for electronic filing and, where applicable, transitioning to a disclosure format that is approved for Regulation A offerings. The issuer may also elect to proceed at that time with its offering under the final requirements for either Tier 1 or Tier 2 offerings, provided it follows the requirements for the respective tiers.

Issuers in ongoing offerings that were qualified before effectiveness of the final rules that wish to transition to a Tier 2 offering may do so by filing a post-qualification amendment that satisfies all of the requirements for Tier 2. Such issuers will transition to the requirements for Tier 2 upon qualification of the post-qualification amendment. For purposes of calculating the maximum offering amount permissible under Rule 251(a), an issuer must reduce the maximum offering amount sought to be qualified under the final rules for the respective tiers by the amount which such issuer has sold during the previous 12-month period pursuant to the preexisting rules for Regulation A.

K. Technical and Conforming Amendments

The final rules for Regulation A amend existing Rules 251–263.[854] The amendments take into account changes to Regulation A associated with the addition of Section 3(b)(2) to the Securities Act, and the items detailed in this release.

As a result of the revisions to Regulation A, we are adopting conforming and technical amendments to Securities Act Rules 157(a),[855] 505(b)(2)(iii),[856] and Form 8–A. Additionally, we are revising Item 101(a)[857] of Regulation S–T[858] to reflect the mandatory electronic filing of all issuer initial filing and ongoing reporting requirements under Regulation A. We are also revising Item 101(c)(6)[859] of Regulation S–T to remove the reference to paper filings in a Regulation A offering, and removing and reserving Item 101(b)(8)[860] of Regulation S–T dealing with the optional electronic filing of Form F–X by Canadian issuers.

III. Economic Analysis

In this section, we analyze the expected economic effects of the final rules relative to the current baseline, which is the market situation in existence today, including current methods of raising up to $50 million in capital available to potential issuers. Our analysis considers the anticipated costs and benefits for market participants affected by the final rules as well as the impact of the final rules on efficiency, competition, and capital formation relative to the baseline. This includes the likely economic effects of the specific provisions of the final rules related to the scope of the exemption, the format and contents of the offering statement, solicitation of interest, ongoing reporting, insignificant deviations, bad actor disqualification, and relationship with state securities law.

The final rules to implement Section 401 of the JOBS Act and amend Regulation A seek to promote capital formation, efficiency and competition for small companies, and provide for meaningful investor protection. We are mindful of the costs imposed by, and the benefits to be obtained from, our rules. Securities Act Section 2(b)[861] and Exchange Act Section 3(f)[862] require us, when engaging in rulemaking that requires us to consider or determine whether an action is necessary or appropriate in the public interest, to consider, in addition to the protection of investors, whether the action will promote efficiency, competition, and capital formation. Exchange Act Section 23(a)(2)[863] requires us, when adopting rules under the Exchange Act, to consider the impact that any new rule would have on competition and not to adopt any rule that would impose a burden on competition that is not necessary or appropriate in furtherance of the purposes of the Exchange Act.

The final rules include provisions mandated by the statute as well as provisions that rely on our discretionary authority. As a result, while many of the costs and benefits of the final rules stem from the statutory mandate of Title IV of the JOBS Act, certain benefits and costs are affected by the discretion we exercise in connection with implementing this mandate. For purposes of this economic analysis, we address the benefits and costs resulting from the mandatory statutory provisions and our exercise of discretion together because the two types of benefits and costs are not readily separable. We also analyze the benefits and costs of significant alternatives to the final rules that were suggested by commenters and that we considered. Many of the benefits and costs discussed below are difficult to quantify when analyzing the likely effects of the final rules on efficiency, competition, and capital formation. For example, the extent to which the amendments to Regulation A will

[854] 17 CFR 230.251 through 230.263.

[855] 17 CFR 230.157(a).

[856] 17 CFR 230.505(b)(2)(iii).

[857] 17 CFR 232.101(a).

[858] 17 CFR 232.10 *et seq.*

[859] 17 CFR 232.101(c)(6).

[860] 17 CFR 232.101(b)(8).

[861] 15 U.S.C. 77b(b).

[862] 15 U.S.C. 78c(f).

[863] 15 U.S.C. 78w(a)(2).

promote future reliance by issuers on this offering method, and the extent to which future use of Regulation A will affect the use of other offering methods, is difficult to precisely estimate. Similarly, there is some uncertainty as to the effect of some of the provisions in the final rules on investor protection. Therefore, much of the discussion is qualitative in nature but, where possible, we attempted to quantify the potential costs and benefits of the final rules.

A. Broad Economic Considerations

One of the primary objectives of Section 401 was to expand the capital raising options available to smaller and emerging companies and thereby to promote capital formation within the larger economy.[864] With this objective in mind, and as background to our analysis of the likely costs and benefits of the final rule provisions, we consider the broader impact of amended Regulation A on capital formation. As discussed below, this will depend on whether issuers that currently raise capital elect to rely on amended Regulation A in place of other offering methods and whether issuers that have been unable to raise capital, or raise enough capital, avail themselves of amended Regulation A because it is preferable over other capital rising methods otherwise available to them. To the extent that amended Regulation A provides a method of raising capital for issuers that currently have no method of doing so, it could enhance the overall level of capital formation in the economy in addition to any redistributive effect that could arise from issuers changing their capital raising methods.

The impact of the final rules on an issuer's ability to raise capital will also depend on whether new investor capital is attracted to the Regulation A market, and on whether investors reallocate existing capital among various types of offerings. Investor demand for securities offered under amended Regulation A will depend on the expected risk, return and liquidity of the offered securities, and in particular, how these characteristics compare to what investors can obtain from securities in other exempt offerings and in registered offerings. Investor demand also will depend on whether Regulation A disclosure requirements are sufficient to enable investors to evaluate the aforementioned characteristics of Regulation A offerings.

To assess the likely impact of the final rules on capital formation, we consider the features of amended Regulation A that potentially could increase the use of Regulation A by new issuers and by issuers that already rely on private and registered offerings.

The amendments to Regulation A we are adopting remove certain burdens identified by commenters and others in existing Regulation A. Offerings relying on existing Regulation A must be qualified by the states and the Commission, which also requires a review and qualification process for issuers to access capital.[865] Amended Regulation A removes the requirement of state qualification for Tier 2 offerings, thereby eliminating the cost and other burdens of the duplicative review under existing Regulation A. Issuance costs may also be reduced, as a percentage of proceeds, by increasing the maximum offering size from $5 million annually under existing Regulation A, to $20 million for Tier 1 offerings and to $50 million for Tier 2 offerings relying on amended Regulation A.

We believe that the potential use of amended Regulation A for Tier 2 offerings depends largely on how issuers perceive, the trade-off between the costs of qualification and ongoing disclosure requirements and the benefits to issuers from access to a broad investor base, expansion of the offering size, the preemption of state securities law registration requirements and the potential for enhanced secondary market liquidity.

With respect to Tier 1 offerings, the potential use of amended Regulation A depends largely on how issuers perceive the trade-off between state review and qualification requirements, limited disclosure requirements (with potentially greater information asymmetry between issuers and investors) and the $20 million maximum offering size.

We also recognize that the level of investor protection resulting from the final rules is an important consideration that could affect the ultimate use and success of amended Regulation A. For example, if preempting state review of Tier 2 offerings, or not requiring audited financials or ongoing disclosures in Tier 1 offerings, leads to undisclosed risks or misconduct in the offering process, then investors may be unwilling to participate in those types of Regulation A offerings. On the other hand, Commission staff review of the offerings and investment limitations for Tier 2 offerings may mitigate some of these concerns for certain investors.

Many of the potential issuers of securities under amended Regulation A may be small companies, particularly early-stage and high-growth companies, seeking capital through equity-based financing because they do not have sufficient collateral or the cash flows necessary to support the fixed repayment schedule of debt financing.[866] Currently, these companies often seek capital from institutional or accredited investors through offerings that are exempt from registration under the Securities Act or through registered public offerings. In the future, whether issuers opt to rely instead on Regulation A will depend on the perceived utility of the amended Regulation A exemption compared to: (i) Other available exemptions from registration, and (ii) registered public offerings. Below we discuss each of these considerations in turn.

Some issuers may prefer to offer securities under amended Regulation A relative to using other offering methods exempt from registration because of potentially limiting features associated with the other exemptions. In particular, securities sold pursuant to the exemptions from registration under Regulation D,[867] which account for a significant amount of exempt offerings,[868] are generally subject to

[864] Congress enacted Section 3(b)(2) against a background of public commentary suggesting that Regulation A, an exemption for small offerings originally adopted by the Commission in 1936 under the authority of Section 3(b) of the Securities Act, should be expanded and updated to make it more useful to small issuers. H.R. 1070 (Small Company Capital Formation Act of 2011) was introduced in April 2011. In its September 2011 report, the Committee on Financial Services noted: ''H.R. 1070, the Small Company Capital Formation Act, raises the offering threshold for companies exempted from registration with the U.S. Securities and Exchange Commission (SEC) under Regulation A from $5 million—the threshold set in the early 1990s—to $50 million. Raising the offering threshold helps small companies gain access to capital markets without the costs and delays associated with the full-scale securities registration process . . .'' *See* H.R. Rep. No. 112–206 (2011).

[865] *See* GAO Report. According to the GAO Report, the limited use of Regulation A appears to have been influenced by multiple factors, including ''the type of investors businesses sought to attract, the process of filing the offering with SEC, state securities laws, and the cost-effectiveness of Regulation A relative to other SEC exemptions. For example, identifying and addressing individual state's securities registration requirements can be both costly and time-consuming for small businesses, according to research, an organization that advocates for small businesses, and securities attorneys that GAO interviewed. Additionally, another SEC exemption [Regulation D] is viewed by securities attorneys that GAO met with as more cost-effective for small businesses . . .''

[866] *See* Berger, Allen N., and Gregory F. Udell, 1998, The economics of small business finance: The roles of private equity and debt markets in the financial growth cycle, Journal of Banking and Finance 22(6), pp. 613–673.

[867] 17 CFR 230.500 through 230.508.

[868] *See* V. Ivanov, and S. Bauguess, 2013, Capital Raising in the U.S.: An Analysis of Unregistered Offerings Using the Regulation D Exemption, 2009–

Continued

restrictions on resale or limits on participation by non-accredited investors in ways that can limit the ability to raise capital. In contrast to Rule 506 of Regulation D, companies relying on amended Regulation A can sell securities to an unlimited number of non-accredited investors,[869] and the securities will not be restricted securities for purposes of the federal securities laws, which will allow for a more diffuse investor base and potential liquidity benefits.

The use of amended Regulation A may also depend on whether companies considering seeking capital through an exempt offering believe that the benefits from access to a broader investor base under amended Regulation A offset the costs of qualification and, with respect to Tier 2 offerings, ongoing disclosure requirements. Other offering exemptions could remain attractive relative to amended Regulation A. For example, general solicitation is now permissible under Rule 506(c) of Regulation D. Issuers relying on Rule 506(c) to solicit offerings may now more easily reach institutional and accredited investors, making it less necessary for them to seek capital from a broader non-accredited investor base, especially if trading platforms aimed at accredited investors in privately placed securities continue to develop.[870]

Finally, the conditional exemption from registration of a class of securities under Section 12(g) available to some Tier 2 issuers may encourage them to pursue a Regulation A offering as a means to avoid the associated costs and requirements of Exchange Act registration and reporting.[871] This effect may be limited by the imposition of the conditions on the Section 12(g) exemption, in particular, the condition limiting the availability of the exemption to smaller companies that do not exceed certain thresholds for public float or, in the absence of float, revenues. Larger issuers of Regulation A securities or issuers using Regulation A to raise capital as part of a growth strategy, or seeking to increase liquidity through a broader investor base, may still be subject to a Section 12(g) registration requirement in the future.

The trade-offs between amended Regulation A and a registered offering are somewhat different. In a registered offering, issuers can offer the securities directly to all potential investors, without a limitation on the aggregate offering amount and with no resale restrictions. Moreover, securities issued through registered offerings often trade on national securities exchanges and can offer a degree of liquidity to investors that is generally not available for securities issued in private offerings. However, the issuance costs associated with small registered public offerings are generally a significant percentage of proceeds and issuers in registered offerings must bear the costs arising from ongoing disclosure requirements under the Exchange Act. These costs are perceived to be one of the determinants of the relatively low incidence of initial public offerings (''IPOs'') over the past decade and may be a motivating factor for potential issuers to prefer offering securities under amended Regulation A.[872] Relative to registered public offerings, offerings under amended Regulation A will provide smaller issuers with access to sources of capital without necessarily imposing the full ongoing reporting requirements of the Exchange Act.

The use of amended Regulation A may depend on the extent to which companies considering a traditional IPO believe that amended Regulation A is a viable alternative. These potential issuers will need to assess whether the cost savings from reduced reporting requirements under amended Regulation A offset the potential reduction in secondary market liquidity compared to registered offerings that meet the listing requirements of national securities exchanges. In particular, securities listed on a national securities exchange are likely to benefit from increased liquidity as a result of greater access to potential investors and a lower level of information asymmetry due to more extensive reporting requirements. At present, only some securities issued under existing Regulation A trade over-the-counter, with the majority not known to trade in any secondary market.

The liquidity trade-off faced by issuers considering amended Regulation A relative to other exempt or registered offering methods may ultimately center on whether the ongoing reporting requirements of Tier 2 offerings can generate sufficient information for secondary markets to provide the intended liquidity benefits. Academic studies have found a close relationship between disclosure requirements and liquidity.[873] The disclosure requirements in the final rules seek to balance the burden of disclosure requirements on issuers and the demand of investors for information by offering issuers a capital raising option with lower compliance costs while still mandating relevant information about the issuer and the securities for the market.

Overall, amended Regulation A could increase the aggregate amount of capital raised in the economy if used by private issuers that have until now been limited in their ability to raise capital through other types of exempt offerings or by smaller private issuers that seek a public market for their securities but that are not sufficiently large to bear the fixed costs of being an Exchange Act reporting company. The impact of amended Regulation A on capital formation could also be redistributive in nature by encouraging issuers to shift from one method of capital raising to another. This potential outcome may have significant net positive effects on capital formation and allocative efficiency by providing issuers with access to capital at a lower cost than alternative capital raising methods and by providing

2012, *available at: http://www.sec.gov/divisions/riskfin/whitepapers/dera-unregistered-offerings-reg-d.pdf.*

[869] Non-accredited investors in Tier 2 offerings will be subject to an investment limitation.

[870] For example, ''NASDAQ Private Market's affiliated marketplace is an electronic network of Member Broker-Dealers who provide accredited institutions and individual clients with access to the market. Companies use a private portal to enable approved parties to access certain information and transact in its securities.'' *See* NASDAQ Private Market overview, *available at: https://www.nasdaqprivatemarket.com/market/overview.*

[871] *See* Section II.B.6.c.

[872] *See* IPO Task Force, Rebuilding the IPO On-Ramp (Oct. 20, 2011), *available at: http://www.sec.gov/info/smallbus/acsec/rebuilding_the_ipo_on-ramp.pdf* (''IPO Task Force'').

There are other possible explanations for the decline in IPOs, for example, macro-economic effects on investment opportunities in the economy and the cost of capital. *See* Lowry, M., 2003, Why does IPO volume fluctuate so much? Journal of Financial Economics 67(1), pp. 3–40. Another possible explanation is an increase in the benefits of being acquired by a larger entity relative to the benefits of operating as an independent firm. *See* Gao, X., J. Ritter, and Z. Zhu, 2013, Where have all the IPOs gone? Journal of Financial and Quantitative Analysis 48(6), pp. 1663–1692.

[873] For example, one study found improved liquidity at companies that chose to comply with Exchange Act reporting requirements in order to remain eligible for quotation on OTCBB. *See* Bushee, B., and C. Leuz, 2005, Economic consequences of SEC disclosure regulation: Evidence from the OTC bulletin board, Journal of Accounting and Economics 39(2), pp. 233–264.

Another study found significant decreases in liquidity for issuers that deregistered their securities, with the subsequent loss of liquidity attributed to decreased disclosure separate from the effect of delisting from a major exchange. This study also shows that some companies choose to deregister under Section 12(b) and trade on less liquid OTC markets instead of trading on national securities exchanges, indicating that, for such companies, the expected costs of reporting under the Exchange Act outweigh the expected liquidity benefits. *See* Leuz, C., A. Triantis, and T. Wang, 2008, Why do firms go dark? Causes and economic consequences of voluntary SEC deregistrations, Journal of Accounting and Economics 45(2–3), pp. 181–208.

investors with additional investment opportunities.

The net effect of the final rules on capital formation will depend on whether issuers that rely on amended Regulation A do so in addition to or instead of other methods of raising capital. The effect will also depend on whether investors find Regulation A disclosure requirements and investor protections to be sufficient to evaluate the expected return and risk of such offerings and to choose between offerings reliant on Regulation A, other exempt offerings and registered offerings. Due to a lack of data, we are not able to estimate the effects of the final rules on the potential rate of substitution between alternative methods of raising capital and amended Regulation A and the overall expansion, if any, in capital raising by potential issuers eligible for amended Regulation A.

B. Baseline

As we described in the Proposing Release, the baseline for our economic analysis of amended Regulation A is market conditions as they exist today, in which issuers seeking to raise capital through securities offerings must register the offer and sale of securities under the Securities Act unless they can rely on an exemption from registration under the federal securities laws.[874] The baseline discussion below also includes a description of investors in offerings of similar amounts and a discussion of the role of intermediaries that may be affected by the final rules.

1. Current Methods of Raising up to $50 Million of Capital

Issuers seeking to raise up to $50 million over a twelve-month period are expected to be affected directly by amended Regulation A. As we described in the Proposing Release, while there are a number of factors that companies consider when determining how to raise capital, one of the primary considerations is whether to issue securities through a registered public offering or through an offering that is exempt from Securities Act registration and ongoing Exchange Act reporting requirements. The choice of offering method may depend on the size of the issuer, the type of investors the issuer seeks to attract and the amount of new capital sought. Registered offerings entail considerable initial and ongoing costs that can weigh more heavily on smaller issuers, providing incentives to remain private and to raise capital outside of public markets.[875] To the extent that these issuance costs constrain small firms' access to capital, they may result in underinvestment in some value-generating projects and thus potentially less efficient allocation of capital to investment projects. This section describes the various currently available offering methods and the prevalence of their use.

a. Exempt Offerings

Currently, small issuers can raise capital by relying on an exemption from registration under the Securities Act, such as Section 3(a)(11),[876] Section 4(a)(2),[877] Regulation D,[878] and Regulation A. Each of these exemptions, however, has requirements that may limit its utility for issuers. For example, the exemption under Securities Act Section 3(a)(11) is limited to intrastate offerings, and Regulation D offerings may limit or prohibit participation by non-accredited investors. Additionally, offerings relying on existing Regulation A require preparation of offering materials and qualification of an offering statement by the Commission and may require qualification or registration in multiple states.[879] The table below summarizes the main features of each exemption.

Type of offering	Offering limit [880]	Solicitation	Issuer and investor requirements	Filing requirement	Resale restrictions	Blue sky law preemption
Section 3(a)(11)	None	No limitations	All issuers and investors must be resident in state.	None	Restricted in some cases. [881]	No.
Section 4(a)(2)	None	No general solicitation.	Transactions by an issuer not involving any public offering. [882]	None	Restricted securities.	No.
Regulation A [883]	$5 million with $1.5 million limit on secondary sales.	Testing the waters permitted before filing.	U.S. or Canadian issuers, excluding investment companies, blank-check companies, reporting companies, and issuers of fractional undivided interests in oil or gas rights, or similar interests in other mineral rights.	File testing the waters materials, Form 1–A, Form 2–A.	No	No.
Rule 504 Regulation D.	$1 million	General solicitation permitted in some cases. [884]	Excludes investment companies, blank-check companies, and Exchange Act reporting companies.	File Form D [885]	Restricted in some cases. [886]	No.

[874] Other rules mandated by the JOBS Act have been proposed but not adopted by the Commission. The baseline does not account for potential changes that may result from future adoption of proposed rules.

[875] *See* IPO Task Force.

[876] Under Securities Act Section 3(a)(11), except as expressly provided, the provisions of the Securities Act (including Section 5 registration requirement) do not apply to a security that is ''part of an issue offered and sold only to persons resident within a single State or Territory, where the issuer of such security is a person resident and doing business within, or, if a corporation, incorporated by and doing business within, such State or Territory.'' 15 U.S.C 77c(a)(3)(a)(11).

[877] Securities Act Section 4(a)(2) provides that the provisions of Section 5 shall not apply to ''transactions by an issuer not involving a public offering.'' 15 U.S.C. 77d(4)(a)(2).

[878] Regulation D contains rules providing exemptions and safe harbors from the Securities Act's registration requirements, allowing some companies to offer and sell their securities without having to register the offering with the Commission. 17 CFR 230.504, 505, 506.

[879] *See* Campbell, R., 2005, Regulation A: Small business' search for a moderate capital, Delaware Journal of Corporate Law 31(1), pp. 77–123. *See also* GAO Report.

[880] Aggregate offering limit on securities sold within a twelve-month period.

[881] Resale restrictions are determined by state securities laws, which typically restrict in-state resales for a one-year period.

[882] Section 4(a)(2) of the Securities Act provides a statutory exemption for ''transactions by an issuer not involving any public offering.'' *See* SEC v. Ralston Purina Co., 346 U.S. 119 (1953) (holding that an offering to those who are shown to be able to fend for themselves is a transaction ''not involving any public offering.'')

[883] This description is based on Regulation A before the adoption of the final rules today.

[884] No general solicitation or advertising is permitted unless the offering is registered in a state requiring the use of a substantive disclosure document or sold under a state exemption for sales to accredited investors with general solicitation.

[885] Filing is not a condition of the exemption.

[886] Restricted unless the offering is registered in a state requiring the use of a substantive disclosure document or sold under a state exemption for sale to accredited investors.

Type of offering	Offering limit [887]	Solicitation	Issuer and investor requirements	Filing requirement	Resale restrictions	Blue sky law preemption
Rule 505 Regulation D.	$5 million	No general solicitation.	Unlimited accredited investors and up to 35 non-accredited investors.	File Form D [888]	Restricted securities.	No.
Rule 506 Regulation D.	None	General solicitation permitted in some cases. [889]	Unlimited accredited investors. Limitations on non-accredited investors. [890]	File Form D [891]	Restricted securities.	Yes.

While we do not have data on offerings relying on an exemption under Section 3(a)(11) or Section 4(a)(2), available data related to Regulation D and Regulation A filings allow us to gauge how frequently issuers currently use these exemptions when raising capital.

i. Regulation A Offerings

As we described in the Proposing Release, issuers rarely rely on existing Regulation A to raise capital. The chart below, from the GAO Report shows the number of filed and qualified Regulation A offerings in fiscal years 1992 to 2011.[892]

Data from GAO Report: Regulation A offerings filed and qualified, 1992-2011

In calendar years 2012 to 2014, 26 Regulation A offerings, excluding amendments, were qualified by the Commission.[893]

Section 402 of the JOBS Act required the GAO to study the impact of state securities laws on Regulation A offerings. The GAO examined: (1) Trends in Regulation A filings, (2) differences in state registration of Regulation A filings, and (3) factors that may have affected the number of Regulation A filings. In its July 2012 report on Regulation A, the GAO cited four factors affecting the use of Regulation A offerings: (1) Costs associated with compliance with state securities regulations, or blue sky laws; (2) the availability of alternative offering methods exempt from registration, such as Regulation D offerings; (3) costs associated with the Commission's filing and qualification process; and (4) the type of investors businesses sought to attract.

As identified by the GAO, compliance with state securities laws is one of the factors that impacts the use of existing Regulation A. The GAO did not provide an estimate of the compliance costs. For issuers seeking to offer securities in multiple states, differences in securities laws and applicable procedures across states may result in significant legal costs [894] and a time consuming process for issuers, which could adversely affect their efforts to raise capital in a timely and cost-effective manner. NASAA has recently initiated a Coordinated Review Program for Regulation A offerings.[895] Only a limited number of issuers have undergone state review through this process to date, so we are unable to conclude whether it may result in lower costs or a shorter amount of review time than was the case prior to its inception.

The GAO also identified costs associated with the Commission's filing and qualification process for Regulation A offerings as another factor contributing to its limited current use.

[887] Aggregate offering limit on securities sold within a twelve-month period.

[888] Filing is not a condition of the exemption.

[889] No general solicitation or advertising is permitted under Rule 506(b). General solicitation and general advertising permitted under Rule 506(c), provided all purchasers are accredited investors and the issuer takes reasonable steps to verify accredited investor status.

[890] Under Rule 506(b), offerings may involve an unlimited number of accredited investors and up to 35 non-accredited investors. Under Rule 506(c), all purchasers must be accredited investors.

[891] Filing is not a condition of the exemption.

[892] For the purposes of this chart, a Regulation A offering is considered ''filed'' when the Commission receives a potential issuer's offering materials through Form 1–A. A Regulation A offering is considered qualified after the Commission staff has reviewed the offering materials and determined that all conditions have been met. Therefore, offerings that are filed and not qualified are either pending, withdrawn, or abandoned.

[893] In cases in which an issuer made multiple Form 1–A filings over this time period, only the first qualified offering by that issuer was included in the number of qualified Regulation A offerings. The estimate also excludes amendments filed on Form 1–A/A, including post-qualification amendments to earlier Form 1–A filings, as well as abandoned and withdrawn filings.

[894] *See* discussion in Section III.I below.

[895] A description of NASAA's coordinated review program can be found at: *http://www.nasaa.org/industry-resources/corporation-finance/coordinated-review/regulation-a-offerings/*. *See* discussion in Section III.I below.

While existing Regulation A permits offerings to an unlimited number of non-accredited investors, the total offering amount must not exceed $5 million in a twelve-month period, limiting the opportunity to scale the fixed component of these costs as a percentage of proceeds.

As described above, a business that relies on Regulation A must file an offering statement with the Commission that must be qualified by Commission staff before the offering can proceed. From 2002 through 2011, Regulation A filings took an average of 228 days to qualify.[896] Average time to qualification exceeded 300 days in 2012–2014.[897] Factors that affect the time to qualification include the paper filing method, quality of the initial filing, time taken by the Commission staff, and time taken by the issuer to provide required information or address questions from previous correspondence with the Commission staff.

Our analysis of the Regulation A filings qualified between 2002 and 2014 shows that approximately half of the issuers operated in the financial industry and the majority of offerings involved equity securities. Offerings with affiliate sales were rare, likely due not only to the requirement of the existing Regulation A that the issuer have net income from continuing operations in the prior two years but also due to the perceptions that adverse selection concerns may limit investor demand in securities offerings with affiliate sales.[898]

ii. Regulation D Offerings

Based on the information available to us, it appears that the most common way to issue up to $50 million of securities is pursuant to an offering under a Regulation D exemption. Eligible issuers can rely on Rule 504 to raise up to $1 million within a twelve-month period, on Rule 505 to raise up to $5 million within a twelve-month period, and on Rule 506 to raise an unlimited amount of capital. In total, based on the analysis of offering amounts reported on Form D in calendar year 2014, Regulation D offerings accounted for over one trillion dollars. Most issuers choose to raise capital by relying on Rule 506, even when their offering size would have potentially permitted reliance on Rule 504 or Rule 505.[899] For example, in 2014, we identified 11,228 Regulation D offerings that would have been potentially eligible to be conducted under amended Regulation A. Of those, 10,671 offerings relied on Rule 506, 376 on Rule 504, and 181 on Rule 505. We summarize their characteristics in the table below.

REGULATION D OFFERINGS IN 2014 BY ISSUERS THAT WOULD BE ELIGIBLE TO RELY ON AMENDED REGULATION A[900]

Offering size	Rule 504	Rule 505	Rule 506	
	≤$1M	≤$5M	≤$20M	$20–50M
Current Reg A Eligible	Yes	Yes	Up to $5M	No
Amended Reg A Eligible	Yes	Yes	Yes	Yes
Number of filings	376	181	10,071	600
Average offering amount ($ million)	0.4	1.4	3.2	31.6
Offerings with non-accredited investors	58%	31%	6%	2%
Median number of investors	3	7	6	9

As shown in the table above, approximately 95% of Regulation D offerings that would be eligible for amended Regulation A relied on Rule 506. A comparison of Rule 506 offerings over $20 million to those below $20 million shows that larger offerings generally had a higher number of investors and were less likely to have non-accredited investors.

Additional data on Regulation D offerings that would have been eligible for amended Regulation A exemption is provided in the graph below, which displays the offering size distribution of Rule 506 offerings and other Regulation D offerings that would have been potentially eligible for the amended Regulation A exemption in calendar year 2014. Approximately 95% of Regulation D offerings that would have been potentially eligible for amended Regulation A had offering amounts below $20 million.

[896] *See* GAO Report.

[897] This estimate is generated by staff from the Commission's Division of Economic and Risk Analysis using Form 1–A filings and is determined as the difference between the filing date for the initial Form 1–A filing and the final disposition date for the final Form 1–A or 1–A/A filing through which the offering was qualified.

[898] *See* Bettis, J., J. Coles, and M. Lemmon, 2000, Corporate policies restricting trading by insiders, Journal of Financial Economics 57, pp. 191–220 (discussing adverse selection issues and corporate policies restricting trading by insiders. *See also* Michaely, R., and W. Shaw, 1994, The pricing of initial public offerings: Tests of adverse-selection and signaling theories, Review of Financial Studies 7(2), pp. 279–319 (analyzing the role of adverse selection and the possibility of informed trading in IPOs).

[899] This tendency could, in part, be attributed to two features of Rule 506: State securities law preemption and unlimited offering amount. *See also* GAO Report.

[900] Based on an analysis performed by staff in the Division of Economic and Risk Analysis of Form D filings submitted for calendar year 2014. The numbers exclude offerings by reporting companies, non-Canadian foreign issuers and pooled investment funds, as well as offerings of interests in claims on natural resources, which are not eligible for amended Regulation A. We do not have a scalable way of excluding blank check companies, which are also not eligible for amended Regulation A, from this sample, which leads to a higher estimate of the number of issuers that would be eligible to rely on amended Regulation A.

[901] Based on an analysis performed by staff in the Division of Economic and Risk Analysis of Form D filings submitted for calendar year 2014.

Distribution of offering size of Rule 506 offerings and other Regulation D offerings in 2014 by issuers that would be eligible to rely on amended Regulation A[901]

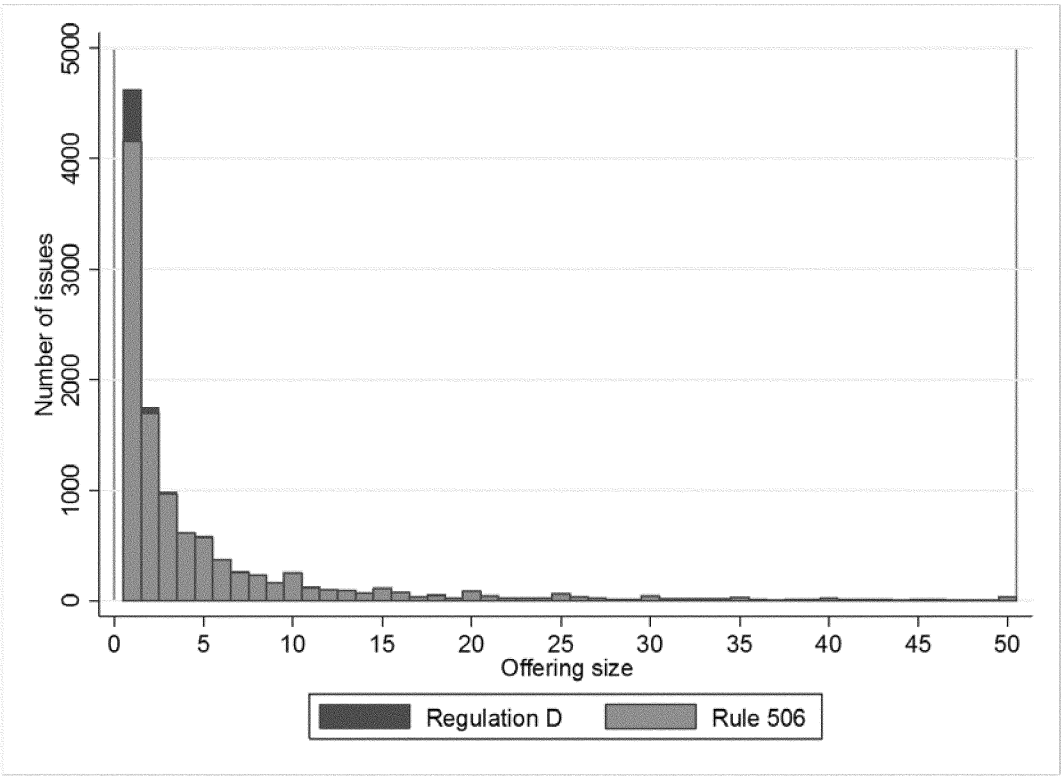

[901] Based on an analysis performed by staff in the Division of Economic and Risk Analysis of Form D filings submitted for calendar year 2014.

Approximately seventy percent of Regulation D issuers that would be eligible for amended Regulation A declined to disclose their revenue range in their Form D filings for 2014. Of the remaining 30%, 13% reported ''no revenues.'' The portion of issuers with no revenues is noteworthy because it may be more difficult for issuers without regular cash flows to obtain debt financing (without collateral or a guarantee).

b. Registered Offerings

Issuers may seek to raise capital by registering the offer and sale of securities under the Securities Act. In calendar year 2014, using data from Thomson Reuters, we identified 75 IPOs and 246 seasoned equity offerings (SEOs) of up to $50 million by issuers that would have been potentially eligible for amended Regulation A.[902]

There has been a general decline in the number of IPOs, particularly those undertaken by small firms, since the late 1990s.[903] One possible reason behind the relatively low number of IPOs under $50 million is that public offerings may be too costly to be a viable capital raising option for smaller issuers.[904] Fees paid to underwriters average 7% for IPOs, 5% for SEOs, and 1% for bond issuances.[905] Issuers conducting registered public offerings also incur Commission registration fees and FINRA filing fees, legal and accounting fees and expenses, transfer agent and registrar fees, costs associated with periodic reporting requirements and other regulatory requirements and various other fees.[906] Two surveys cited in the IPO Task Force report concluded that regulatory compliance costs of IPOs average $2.5 million initially, followed by an average ongoing cost of $1.5 million per year.[907]

Because of the fixed-cost nature of some of the compliance-related fees associated with public offerings, compliance-related fees as a percentage of offering proceeds tend to decline as offering size increases, as illustrated in the table below. Offerings below $50 million, and especially offerings below $20 million, incur significantly higher registration, legal and accounting-related fees, as a percentage of proceeds.

CERTAIN NON-UNDERWRITER IPO-RELATED FEES AS A PERCENTAGE OF OFFERING PROCEEDS FROM 1992–2014 [908]

	Offering ≤$20M %	Offering $20–$50M %	Offering >$50M %
SEC Registration Fees	0.11	0.04	0.03
Blue Sky Fees	0.35	0.05	0.02
Accounting Fees	1.38	0.84	0.56
Legal Fees	2.32	1.18	0.81

In addition to compliance costs, there are other possible explanations for the trends in IPOs. A decline in public offerings also could result from macro-economic effects on investment opportunities and the cost of capital [909] or an increase in the economies of scope from being acquired by a larger entity relative to the benefits of operating as an independent firm.[910]

Several other trade-offs may affect an issuer's willingness to pursue an IPO. According to the IPO Task Force survey, 88% of CEOs that had completed an IPO listed ''Managing Public Communications Restrictions'' as one of the most significant challenges brought on by becoming a reporting company.[911] Additionally, issuers in certain industries, such as high-technology sectors, may be sensitive to the costs of disclosure of proprietary information and may find private capital sources more attractive.[912] Access to capital may be especially time-sensitive for the types of issuers most likely to conduct small offerings, such as startups and small businesses, rendering these issuers unwilling to go through a potentially lengthy registration process. Directors and officers of small issuers also may not want to subject themselves to the increased liability and takeover threats that come with dispersed ownership.[913]

The cost and disclosure requirements of IPOs have been affected by the recent adoption of scaled reporting requirements for emerging growth companies (EGCs) under Title I of the

[902] The sample excludes offerings from non-Canadian foreign issuers, blank check companies, and investment companies, which would not be eligible to rely on amended Regulation A. Offerings with gross proceeds below $1,000 are excluded to minimize measurement error. Issuers of interests in claims on natural resources, which also would not be eligible for amended Regulation A, were not separately eliminated due to data constraints.

[903] *See* IPO Task Force. However, a recent study notes that the decline in IPOs has been partly reversed in 2012–2014. *See* Dambra, M., L. Field, and M. Gustafson, 2014, The JOBS Act and IPO volume: Evidence that disclosure costs affect the IPO decision, Journal of Financial Economics (forthcoming), *available at: http://papers.ssrn.com/sol3/papers.cfm?abstract_id=2459591.*

[904] Other potential reasons, such as macro-economic conditions, are discussed below.

[905] *See* Chen, H., and J. Ritter, 2000, The seven percent solution, Journal of Finance 55(3), pp. 1105–1131; Abrahamson, M., T. Jenkinson, and H. Jones, 2011, Why don't U.S. issuers demand European fees for IPOs? Journal of Finance 66(6), pp. 2055–2082; Corwin, S., 2000, The determinants of underpricing for seasoned equity offers, Journal of Finance 58(5), pp. 2249–2279; Huang, R., and D. Zhang, 2011, Managing underwriters and the marketing of Seasoned Equity Offerings, Journal of Financial and Quantitative Analysis 46(1), pp. 141–170; Fang, L., 2005, Investment bank reputation and the price and quality of underwriting services, Journal of Finance 60(6), pp. 2729–2761.

[906] According to the survey cited in the IPO Task Force report, 92% of the surveyed CEOs listed the ''Administrative Burden of Public Reporting'' as being one of the most significant challenges of an IPO. *See* IPO Task Force.

[907] *See* IPO Task Force. However, some studies conclude that the decline in U.S. small-firm IPOs predated the adoption of the Sarbanes-Oxley Act. *See* Gao, X., J. Ritter, and Z. Zhu, 2013, Where have all the IPOs gone? Journal of Financial and Quantitative Analysis 48(6), pp. 1663–1692. *See also* Doidge, C., A. Karolyi, and R. Stulz, 2013, The U.S. left behind? Financial globalization and the rise of IPOs outside the U.S., Journal of Financial Economics 110(3), pp. 546–573.

[908] Fee information is compiled from Thomson Reuters SDC data on IPOs for 1992–2014. The sample excludes offerings from non-Canadian foreign issuers, blank-check companies, and investment companies. Averages are computed based on observations with non-missing data (where a particular type of fees is separately reported). Offerings with gross proceeds below $1,000 are excluded to minimize measurement error.

The analysis includes legal, accounting, blue sky, and registration fees, to which we collectively refer as ''compliance fees''. Blue Sky Fees denotes fees and expenses related to compliance with state securities regulations. We note that Blue Sky fees associated with small registered offerings may over- or under-estimate similar expenses for Regulation A offerings of the same size.

[909] *See* Lowry, M., 2003, Why does IPO volume fluctuate so much? Journal of Financial Economics 67(1), pp. 3–40.

[910] *See* Gao, X., J. Ritter, and Z. Zhu, 2013, Where have all the IPOs gone? Journal of Financial and Quantitative Analysis 48(6), pp. 1663–1692.

[911] *See* IPO Task Force.

[912] *See* Verrecchia, R., 2001, Essays on disclosure, Journal of Accounting and Economics 32, pp. 97–180.

[913] *See* Burkart, M., D. Gromb, and F. Panunzi, 2000, Agency conflicts in public and negotiated transfers of corporate control, Journal of Finance 55(2), pp. 647–677.

JOBS Act, which can ease the compliance obligations of certain issuers in registered offerings. There is some evidence that Title I has contributed to an increase in IPO volume in 2012–2014, particularly in industries with high proprietary disclosure costs, such as biotechnology and pharmaceuticals.[914] Some recent studies, however, suggest that the overall cost of going public for EGCs has not decreased whereas the indirect cost (*e.g.,* IPO underpricing) has increased.[915]

c. Private Debt Financing

Equity, including principal owner equity, accounts for a significant proportion of the total capital of a typical small business. Other sources of capital for small businesses include loans from commercial banks, finance companies and other financial institutions, and trade credit.[916]

Borrowing is relatively costly for many early-stage issuers as they may have low revenues, irregular cash-flow projections, insufficient assets to offer as collateral and high external monitoring costs.[917] For example, a small growth company, such as a technology or life sciences startup, without steady revenues or substantial tangible assets is likely to have trouble obtaining a loan or a line of credit from a bank because it would have difficulty proving its ability to repay. Financial institutions generally require such small business borrowers to provide collateral or a guarantee by owners,[918] which some issuers may be unable or reluctant to provide.

2. Investors

There are currently no limitations on who can invest in existing Regulation A offerings. In considering the baseline for the amendments to Regulation A, we also examine the investors in other existing methods of raising up to $50 million in capital because the final rules we are adopting may impact an issuer's choice of offering method and the potential investor base of the offering. For example, as discussed above, while there are no limitations on the number of non-accredited investors that can invest in offerings made pursuant to Rule 504 of Regulation D and in registered public offerings, offerings made pursuant to Rule 505 and Rule 506(b) of Regulation D are limited to a maximum of 35 non-accredited investors. Issuers making offerings pursuant to Rule 506(c) of Regulation D must take reasonable steps to verify that investors are accredited investors.

While non-accredited investors can participate in Regulation D offerings, subject to limitations described above, data from Form D filings suggests that non-accredited investors are not significantly involved in Regulation D offerings of up to $50 million. Offerings involving non-accredited investors are typically smaller than those that do not involve non-accredited investors. In 2014, we estimate that approximately 152,641 investors participated in Regulation D offerings of less than $50 million by issuers that would be eligible for amended Regulation A.[919] Such offerings had an average of 13.6 investors per offering. Approximately 8% of such offerings involved one or more non-accredited investors.

The total number of households estimated to qualify as accredited investors is substantially larger than the total number of investors reported to have participated in an unregistered offering. As of 2013, we estimated that over 9 million U.S. households qualified as accredited investors based on the net worth standard alone, approximately 8 million U.S. households qualified as accredited investors based on the income standard alone, and approximately 12.4 million U.S. households qualified based on either the income standard or the net worth standard.[920]

3. Financial Intermediaries

Regulation A amendments may also affect financial intermediaries that may become involved in the placement and quotation of Regulation A securities. Currently, there is limited involvement of intermediaries in a Regulation A offering. However, financial intermediaries are used in certain of the other types of offerings, including registered offerings and certain exempt offerings. To the extent that the amendments to Regulation A that we are adopting today impact the number and the overall amount of capital raised in other types of offerings, financial intermediaries may be affected. For example, in registered offerings, underwriters are frequently used to identify potential investors and are primarily responsible for facilitating a successful distribution of the offered securities. While intermediaries are used less frequently in Regulation D offerings, they play a role in some offerings. We estimate that fewer than 10% of Regulation D offerings that would have been potentially eligible under amended Regulation A involved an intermediary (the estimate is based on information about sales compensation or sales compensation recipients reported in connection with the offering).[921]

C. Scope of Exemption

1. Eligible Issuers

Consistent with the restrictions in existing Regulation A, the final rules exclude non-Canadian foreign issuers, investment companies (including BDCs), Exchange Act reporting companies, blank check companies, and issuers of fractional undivided interests in oil or gas rights, or similar interests

[914] *See* Dambra, M., L. Field, and M. Gustafson, 2014, The JOBS Act and IPO volume: Evidence that disclosure costs affect the IPO decision, Journal of Financial Economics (forthcoming), *available at: http://papers.ssrn.com/sol3/papers.cfm?abstract_id=2459591.*

[915] *See* Chaplinsky, S., K. Hanley, and S. K. Moon, 2014, The JOBS Act and the costs of going public, Working paper, *available at: http://papers.ssrn.com/sol3/papers.cfm?abstract_id=2492241;* Barth, M., W. Landsman, and D. Taylor, 2014, The JOBS Act and information uncertainty in IPO firms, Working paper, *available at: http://papers.ssrn.com/sol3/papers.cfm?abstract_id=2465927;* Westfall, T.J., and T.C. Omer, 2014, The impact of emerging growth company status on initial public offering valuation and the associated auditor risk and effort, Working paper, *available at: http://papers.ssrn.com/sol3/papers.cfm?abstract_id=2512605.*

[916] *See* Berger, A., and G. Udell, 2006, Small business credit availability and relationship lending: The importance of bank organisational structure, Economic Journal 112(477), pp. 32–53. In this study, equity accounted for approximately half of the total capital, including approximately 31% (45% for the smallest firms—that is, those, with less than $1 million in revenues or less than twenty employees) attributed to the principal owner. The remainder came from debt financing, with about one quarter accounted for by loans from commercial banks, finance companies and other financial institutions, and another 16% comprised of trade credit. The study was conducted based on the 1993 edition of the Federal Reserve Board's Survey of Small Business Finances, which collects information on small businesses in the United States.

[917] *See* Robb, A., and D. Robinson, 2014, The capital structure decisions of new firms, Review of Financial Studies 27(1), pp. 153–179.

[918] Approximately 92% of all small business debt to financial institutions is secured, and owners of the firm guarantee about 52% of that debt. *See* Berger, A., and G. Udell, 1995, Relationship lending and lines of credit in small firm finance, Journal of Business 68(3), pp. 351–381. Some studies of small business lending also document the creation of local captive markets with higher borrowing costs for small, opaque firms as a result of strategic use of soft information by local lenders. *See* Agarwal, Sumit, and Robert Hauswald, 2010, Distance and private information in lending, Review of Financial Studies 13(7), pp. 2757–2788.

[919] Based on an analysis by staff from the Commission's Division of Economic and Risk Analysis of initial Form D filings submitted during calendar year 2014. The estimated number of investors likely exceeds the actual number of Regulation D investors because investors could have participated in more than one offering.

[920] These estimates are based on an analysis by staff from the Commission's Division of Economic and Risk Analysis, using the Federal Reserve Board's 2013 Survey of Consumer Finances.

[921] Based on an analysis performed by staff in the Division of Economic and Risk Analysis of Form D filings for calendar year 2014.

in other mineral rights, from relying on the exemption.

The final rules also exclude two additional categories of issuers: (i) issuers that are or have been subject to a denial, suspension, or revocation order by the Commission pursuant to Section 12(j) of the Exchange Act within the five years immediately preceding the filing of the offering statement, and (ii) issuers that are required to, but that have not, filed with the Commission the ongoing reports required by the final rules during the two years immediately preceding the filing of an offering statement.

Excluding issuers that have not complied with Regulation A's ongoing reporting requirements in the two-year period immediately preceding the filing of a new offering statement will incentivize issuers that intend to rely on amended Regulation A exemption in the future to comply with its ongoing reporting requirements. Similarly, excluding issuers that were subject to a denial, suspension, or revocation order by the Commission pursuant to Section 12(j) of the Exchange Act within the five years immediately preceding the filing of the offering statement will incentivize registrants to comply with their obligations under the Exchange Act, including their ongoing reporting obligations, and will prevent issuers with a history of non-compliance from relying on Regulation A after they terminate or suspend their Exchange Act reporting obligations. At the same time, neither of these exclusions should result in additional compliance costs for issuers because they do not impose any reporting or other requirements on issuers beyond those already mandated by existing regulations.

We recognize that excluding these additional categories of issuers would have an effect on capital formation as it could prevent Regulation A offerings by issuers who otherwise might have utilized the Regulation A exemption rather than other methods of capital raising. However, to the extent that the information contained in required past reports provides investors in follow-on offerings of Regulation A securities with a more complete picture of the issuer's business and financial condition and is relevant for current investment decisions, the exclusion of issuers that are not compliant with Regulation A's reporting requirements and issuers subject to an order by the Commission pursuant to Section 12(j) should therefore enhance investor protection and the informational efficiency of prices of Regulation A securities by allowing investors to make better informed investment decisions. Moreover, we believe that these additional issuer eligibility requirements will complement each other in facilitating compliance with our rules.

To the extent that more issuers use the amended Regulation A exemption, the final rules may promote competition among eligible issuers in the market for investor capital and in the market for goods and services. The final rules may also promote competition in the product market between small issuers and larger issuers.

As suggested by some commenters, we could have expanded the categories of eligible Regulation A issuers to include non-Canadian foreign issuers,[922] blank check companies,[923] BDCs,[924] and issuers of fractional undivided interests in oil or gas rights, or similar interests in other mineral rights.[925] These alternatives could potentially enhance capital formation and competition.[926]

However, it may be potentially difficult and costly for investors, especially less sophisticated investors, to determine the valuation and risk of securities of non-Canadian foreign issuers, blank check companies and issuers of fractional undivided interests in oil or gas rights, or similar interests in other mineral rights, so extending eligibility to such issuers may also decrease investor protection. To the extent that such information asymmetries are not fully mitigated by initial and ongoing Regulation A disclosure requirements, which are generally less extensive than the disclosure requirements for registered offerings, the prices of Regulation A securities of these issuers could be less informationally efficient. Along the same lines, we believe the specialized nature of capital formation and investment strategies at BDCs warrants disclosures that are more specialized than what is required by existing or amended Regulation A for a proper understanding of an investment in the securities of these types of issuers.

We also could have expanded the categories of eligible Regulation A issuers to include issuers that are subject to the ongoing reporting requirements of Section 13 or 15(d) of the Exchange Act (''reporting companies''), as suggested by some commenters.[927] Although reporting companies sometimes conduct offerings exempt from registration, we are unable to estimate the number of reporting companies that would use the amended Regulation A exemption if it were made available to them. We recognize that some reporting companies may have benefited from this alternative due to, for example, the lower costs of preparation of a Regulation A offering statement than a registration statement.[928] Additionally, some reporting companies whose securities are not listed on a national securities exchange could potentially benefit from savings of time and dollar expenditures that may result from the state securities law preemption in Tier 2 offerings. However, because Exchange Act disclosure requirements for reporting companies are more extensive than those under amended Regulation A, reporting companies would not be able to derive the benefit of reduced ongoing reporting costs under amended Regulation A. Other commenters suggested imposing more restrictive issuer eligibility criteria, by excluding issuers that are not ''operating companies'' [929] or excluding shell companies and issuers of penny stock.[930] While these additional exclusions may create some investor protection benefits, such additional exclusions would be likely to limit capital formation and competition among small issuers, which are more likely to fall into the penny stock

[922] *See* ABA SIL Letter; Andreessen/Cowen Letter; BDO Letter; McCarter & English Letter; OTC Markets Letter; Richardson Patel Letter; SVB Letter; SVGS Letter.

[923] *See* Gilman Law Letter; IPA Letter; Richardson Patel Letter.

[924] *See* ABA BLS Letter; CFIRA Letter 1; Commonwealth Fund Letters 1 and 2; KVCF Letter; Milken Institute Letter; MoFo Letter; REISA Letter; SBIA Letter; WR Hambrecht + Co Letter. Most of these commenters noted that BDCs serve an important function in facilitating small or emerging business capital formation or in providing a bridge from private to public markets.

[925] *See* REISA Letter.

[926] If eligibility under amended Regulation A had been extended to investment companies and BDCs, and such companies obtained a lower cost of capital and passed savings through to the companies in which they invest, the latter could also realize indirect capital formation benefits.

[927] Three commenters recommended allowing Exchange Act reporting companies that are current in their reporting obligations to conduct Tier 2 offerings. *See* Andreessen/Cowen Letter; BIO Letter; OTC Markets Letter. One of these three commenters limited its recommendation to companies with a non-affiliate float of less than $250 million. *See* BIO Letter. The other two commenters further commented that Exchange Act reporting should satisfy Regulation A reporting obligations if the Commission adopted their recommendation. *See* Andreessen/Cowen Letter and OTC Markets Letter.

[928] According to one commenter, Form S–1 registration may be too costly for micro-cap companies, and the eligibility requirements of Form S–3 limit primary capital raising for issuers with a small public float. *See* Andreessen/Cowen Letter. But see earlier discussion of indirect costs of issuance for issuers using scaled disclosures in Section III.B.1.b.

[929] *See* CFIRA Letter 1 and WR Hambrecht + Co Letter.

[930] *See* ABA BLS Letter and MoFo Letter.

category, or some early-stage companies, which may not meet the definition of an ''operating company.'' Overall, due to the implications of extending issuer eligibility before the Commission has the ability to assess the impact of the changes to Regulation A being adopted today, we believe that it is prudent to defer consideration of potential changes to the categories of eligible issuers until we have the opportunity to observe the use of the amended Regulation A exemption and assess any new market practices as they develop.

2. Eligible Securities

Consistent with the statute, the final rules apply to offerings of equity securities, debt securities, and securities convertible or exchangeable to equity interests, for example, warrants, including any guarantees of such securities.[931]

Similar to the proposal, the final rules exclude offerings of asset-backed securities (''ABS'') from eligibility for Regulation A. As discussed above, we believe that ABS issuers are not the intended beneficiaries of the mandated expansion of Regulation A. ABS are subject to the provisions of Regulation AB and other rules specifically tailored to the offering process, disclosure and reporting requirements for such securities, and we do not believe that Regulation A's requirements are suitable for offerings of such securities. ABS are designed to pool the risk of already-issued loans and other financial assets and, in this respect, do not constitute new capital formation. We recognize that, in certain cases, permitting ABS offerings to be conducted under Regulation A could lower the cost of capital for underlying borrowers whose loans are eventually securitized by ABS issuers and therefore indirectly facilitate capital formation.[932] In practice, however, the vast majority of ABS offerings are much larger than the maximum allowable offering size under amended Regulation A.[933] As a result, we believe that excluding ABS offerings from eligibility for Regulation A likely will not have a significant adverse effect on capital formation.

3. Offering Limitations and Secondary Sales

a. Offering Limitations

As explained above, the final rules introduce two tiers of offerings compared with the baseline of one tier in existing Regulation A. The tiered approach in the final rules allows us to scale regulatory requirements based on offering size, to give issuers more flexibility in raising capital under Regulation A, and to provide appropriately tailored protections for investors in each tier. Issuers seeking to raise a larger amount of capital are, among other things, required to provide more extensive initial and ongoing disclosures, but are also able to take advantage of the larger maximum offering size in Tier 2 (up to $50 million in a twelve-month period). In light of this larger maximum offering size, the final rules impose additional disclosure requirements and other provisions to provide protection to investors in Tier 2 offerings. Issuers seeking a smaller amount of capital retain the advantage of more scaled disclosures required in Tier 1 offerings but must comply with a lower offering size limit.

We recognize that the cost associated with greater disclosure requirements for offerings made under Tier 2 in amounts up to $20 million may place Tier 2 issuers at a relative competitive disadvantage as compared to issuers seeking to raise an amount below $20 million in a Tier 1 offering. Such potential competitive effects are likely to be mitigated by the ability of issuers to evaluate the trade-off between the costs associated with more extensive disclosure requirements for Tier 2 offerings and the benefit of a potentially higher securities valuation stemming from a reduction in information asymmetry between issuers and investors due to the more extensive disclosure requirements for Tier 2 offerings.

In a change from the proposal, and in line with the suggestions of some commenters, the final rules raise the Tier 1 maximum offering size from $5 million to $20 million in a twelve-month period in order to provide smaller issuers with additional flexibility to meet their financing needs.[934] We expect the higher Tier 1 maximum offering size will facilitate capital formation under Regulation A for those issuers seeking to raise between $5 and $20 million in a twelve-month period. We expect the resulting capital formation benefits to be greater for smaller issuers for which the incremental costs of the Tier 2 disclosure regime—relative to the costs of complying with state registration—exceed the benefits of more extensive disclosure.

Compared to the baseline, the increase in the maximum offering size to $20 million for Tier 1 offerings and the creation of Tier 2 with the maximum offering size of $50 million will provide issuers with increased flexibility with regard to their offering size and should lower the burden of fixed costs associated with conducting Regulation A offerings as a percentage of proceeds.[935] This could make amended Regulation A more cost effective and attractive to issuers than existing Regulation A, resulting in potential favorable effects on capital formation and competition. The increase in the maximum offering size could also make Regulation A attractive to a broader range of issuers, including larger issuers. This could provide investors with a broader range of investment opportunities in the Regulation A market and potentially result in a more efficient allocation of investor capital.

The increased maximum offering size could also contribute to improved liquidity for Regulation A securities, to the extent that larger issues may encourage greater breadth of equity ownership, assuming sufficient secondary market demand develops.[936] Improved liquidity would enable investors in Regulation A offerings to unwind their investments more easily and at a lower cost, thus making such investments more attractive to potential investors. On the other hand, if investor demand for securities offered under amended Regulation A is low, this could negatively affect security prices and liquidity.

[931] *See* discussion in Section II.B.2 above.

[932] This indirect effect may result because, due to bank accounting standards and capital requirements, securitization allows originators to move assets off the balance sheet, freeing up capital for additional loans. The resulting increase in capital available for lending could lead to lower borrowing costs for all borrowers down the capital supply chain. *See* Pennacchi, G., 1995, Loan sales and the cost of bank capital, Journal of Finance 43(2), pp. 375–396; Carlstrom, C., and K. Samolyk, 1995, Loan sales as a response to market-based capital constraints, Journal of Banking and Finance 19(3), pp. 627–646.

[933] Our analysis indicates that from 2011–2013, approximately 2.9% of ABS issuances were below $50 million. This estimate uses the AB Alert and CM Alert databases and includes only private label ABS deals.

[934] Some commenters recommended raising the Tier 1 offering limitation to $10 million or more. *See* Guzik Letter 1 and ICBA Letter.

[935] To the extent that issuers in Tier 2 offerings face additional costs due to revised disclosure requirements under amended Regulation A, issuance costs as a percentage of proceeds may remain unchanged or may increase.

[936] We recognize the possibility that, despite the absence of resale restrictions, even large Regulation A offerings with heavy investor participation may fail to attain sufficient liquidity due to a lack of secondary trading and a lack of breadth of institutional ownership, and thus may be associated with a higher cost of capital due to the illiquidity premium. In such a scenario, some issuers and investors may still benefit from having access to a type of offering that provides greater liquidity than Regulation D securities offerings although less liquidity than registered offerings of securities listed on major national exchanges.

If investor demand for Regulation A securities and information about issuers is sufficient, the increase in maximum offering size could also contribute to the development of intermediation services, such as market making, and to the coverage of Regulation A securities by analysts.[937] It is possible that an underwriting market may develop to provide Regulation A offering services, especially in larger Tier 2 offerings. The presence of these services could have a positive impact on investor participation and aftermarket liquidity of Regulation A securities, further increasing demand for such services. It is also possible, however, that investor demand for Regulation A securities will not expand sufficiently to make such services economically feasible.

Finally, the increase in the maximum offering size could result in increased competition among Regulation A issuers for investor capital. If the number of issuers seeking to raise larger amounts of capital pursuant to Regulation A increases more than the size of the accredited and non-accredited investor base, investors considering Regulation A securities will have more choice of investment opportunities in the Regulation A market, resulting in greater competition among issuers for prospective investors. Increased competition, in turn, could result in more efficient allocation of capital by investors. The intensity of competition among issuers for investor capital may not change, however, if issuers are able to attract additional numbers of accredited and non-accredited investors as the Regulation A market develops.

Alternatively, as suggested by some commenters, we could have increased the Tier 2 maximum offering size above $50 million, for example, to $75 or $100 million.[938] This alternative could result in benefits that are similar to the benefits of the increase in the maximum offering size contained in the final rules but of a potentially larger magnitude. However, there is reason to believe that the magnitude of the increase in such benefits may be limited. In particular, although Rule 506 does not limit maximum offering size, few Regulation D offerings by issuers that would be eligible for amended Regulation A exceeded $50 million.[939] To the extent that the current use of other types of exempt offerings is indicative of future Regulation A offerings, the alternative of raising the Tier 2 offering size above $50 million may not lead to a significant increase in the number of issuers.

However, we recognize that historical use of Regulation D may not fully represent future potential use of Regulation A, particularly to the extent that the amended rules facilitate offerings by issuers that do not currently rely on other private offering exemptions and that are seeking a broader investor base and enhanced liquidity for their issued securities. In particular, amended Regulation A may attract issuers seeking a public ownership status, and for whom a likely alternative is a registered offering. An increase in the Tier 2 offering size above $50 million could result in some issuers shifting from conducting a registered offering to conducting a Tier 2 offering. As discussed earlier, amended Regulation A may facilitate offerings that would not otherwise be conducted given the cost of registered offerings. However, it is also possible that an increase in the Tier 2 offering size above $50 million will not result in a significant number of issuers shifting from conducting a registered offering to conducting a Tier 2 offering given that the relative cost savings from a Tier 2 offering compared to a registered offering may be lower for offerings in the $50 million to $75 million range than for those below $50 million.[940]

An increased maximum offering size for Tier 1 offerings could increase the overall amount of securities being offered to the general public that are subject to less extensive initial disclosure requirements and not subject to ongoing disclosure requirements, which may reduce the ability of investors to make informed investment decisions. However, some issuers that conduct offerings that are eligible for Tier 1 may instead choose a Tier 2 offering, for example, to take advantage of the benefits of more extensive disclosure, such as potentially greater secondary market liquidity, and the benefits of a single level of regulatory review.

An increased maximum offering size for Tier 2 Regulation A offerings could increase the overall amount of securities being offered to the general public that are subject to initial and ongoing disclosure requirements that are less extensive than the requirements for registered offerings being offered to the general public, which may result in less informed decisions by investors, thus potentially impacting investor protection. This may be partly mitigated by the investment limitations imposed on non-accredited investors in Tier 2 offerings. Further, larger issuers are more likely to conduct registered offerings, associated with the more extensive disclosure requirements of the Exchange Act.[941] We believe that the

[937] Academic studies show that firm size is an important predictor of analyst coverage, so if larger issuers are attracted to the Regulation A market, they may be more likely to be covered by analysts than smaller issuers, all else equal. *See* Barth, M., R. Kasznik, and M. McNichols, 2001, Analyst coverage and intangible assets, Journal of Accounting Research 39(1), pp. 1–34.

[938] *See* B. Riley Letter; Fallbrook Technologies Letter; OTC Markets Letter; Public Startup Co. Letter 1; Richardson Patel Letter.

[939] Based on an analysis of Form D filings for 2014 by staff from Commission's Division of Economic and Risk Analysis, less than 3% of Regulation D offerings by issuers that would be eligible for amended Regulation A had offering size greater than $50 million.

We also considered the overall distribution of registered offerings (initial public offerings and seasoned equity offerings). The overall number of Regulation D offerings significantly exceeded the number of registered equity offerings, thus the combined distribution of registered and Regulation D offerings closely resembles the distribution of Regulation D offerings. In 2014, most (92.2%) of the offerings conducted in the form of registered equity offerings or Regulation D offerings had offer sizes up to $50 million. In 2014, offerings in the $50–$75 million range accounted for 1.0% of Regulation D offerings and approximately 10% of registered equity offerings. Data on registered offerings was obtained from Thomson Reuters, as described in Section III.B.1.b.

[940] The fixed costs of registered offerings represent a significantly higher portion of offering proceeds as offering sizes decrease. For instance, compliance related costs (registration, legal and accounting expenses and fees) increase from an average of an average of 1.7% for IPOs and 0.5% for SEOs in the $50–$75 million range to an average of 2.9% for IPOs and 1.6% for SEOs in the below $50 million range. Fee information is compiled from Thomson Reuters SDC data for 1992–2014, excluding offerings from non-Canadian foreign issuers, blank-check companies, and investment companies. Average compliance fees and expenses for this calculation are based on observations with non-missing data (where all four types of fees—legal, accounting, blue sky, and registration fees, to which we collectively refer as compliance fees—are separately reported). Offerings with gross proceeds below $1,000 are excluded to minimize measurement error.

[941] Early in the firm's life cycle, it may be optimal for a firm to remain private, but as it grows larger, it may become optimal to conduct a registered IPO. *See* Chemmanur, Thomas J., and Paolo Fulghieri, 1999, A theory of the going-public decision, Review of Financial Studies 12(2), pp. 249–279. Privately held firms tend to be significantly smaller than firms with publicly traded securities. *See* Asker, John, Joan Farre-Mensa, and Alexander Ljungqvist, 2014, Corporate investment and stock market listing: A puzzle? Review of Financial Studies 28(2), pp. 342–390. Asker, John, Joan Farre-Mensa, and Alexander Ljungqvist, 2011, What do private firms look like? Data appendix, *available at: http://ssrn.com/abstract_id=1659926*. Other studies support the notion that larger firms are more likely to conduct a registered IPO. *See* Pagano, Marco, Fabio Panetta, and Luigi Zingales, 1998, Why do computers go public? An empirical analysis, Journal of Finance 53, 27–64 (showing that size predicts going public using Italian data). *See* also Chemmanur, Thomas J., Shan He, and Debarshi K. Nandy, 2010, The going-public decision and the product market, Review of Financial Studies 23(5), pp. 1855–1908 (showing that size predicts a higher likelihood of conducting a registered IPO using US data). In turn, smaller firms that have undertaken an IPO in the past are more likely to go private later on. *See* Mehran, Hamid, and Stavros Peristiani,

Continued

annual offering limitation for Tier 2 will serve to limit the utility of the Regulation A exemption for larger issuers and thus will make it more likely that they will continue to raise money through registered offerings and provide the corresponding disclosure.

b. Secondary Sales

The final rules continue to permit secondary sales as part of a Regulation A offering, subject to the following conditions. The amount of securities that selling securityholders can sell at the time of an issuer's initial offering and within the following 12-month period may not exceed 30% of the aggregate offering price (offering size) of a particular offering. Following the expiration of the first 12-month period after an issuer's initial qualification of an offering statement, the amount of securities that affiliate securityholders can sell in a Regulation A offering in any 12-month period will be limited to $6 million in Tier 1 offerings and $15 million in Tier 2 offerings.[942] After the initial 12-month period, sales by non-affiliate securityholders made pursuant to the offering statement will not be subject to a limit on secondary sales but will be aggregated with sales by the issuer and affiliates for the purposes of compliance with the maximum offering limitation for the respective tier. The final rules also eliminate the provision in the current Rule 251(b), which prohibits resales by affiliates unless the issuer has had net income from continuing operations in at least one of the last two years.[943]

Several commenters recommended eliminating limits on sales by existing securityholders,[944] including one commenter that recommended eliminating restrictions on sales by non-affiliate securityholders since concerns over information asymmetries between potential investors and non-affiliate securityholders would be reduced.[945] Other commenters recommended either proscribing resales entirely[946] or requiring the approval of the resale offering by a majority of the issuer's independent directors upon a finding that the offering is in the best interests of both the selling securityholders and the issuer.[947] Another commenter recommended requiring a twelve-month holding period for selling shareholders in order to distinguish between investors seeking to invest in a business and investors simply seeking to sell to the public for a gain or limiting securityholders not qualifying for the twelve-month holding period to selling a fraction of their shares, such as 50%.[948]

Whether and to what extent securityholders should be permitted to sell in a Regulation A offering involves a trade-off between enhancing liquidity for selling securityholders and limiting the potential harm to investors that could arise from such sales. The final rules attempt to balance these considerations. The trade-off between these countervailing considerations will depend in large part on whether the selling securityholder is an affiliate of the issuer. There are two concerns about sales by affiliates. One is that there is an information asymmetry between an affiliate and outside investors. In particular, an affiliate selling securityholder is likely to have an informational advantage that it may potentially utilize to the detriment of outside investors.[949] The other concern is the alignment of incentives. With respect to affiliates, it is often argued that the incentives of company management are better aligned with other shareholders when managers hold a significant equity interest in the company.[950] Thus, it can be important that insiders retain an ownership stake in the company to ensure that their incentives are aligned.[951] A divestiture of the ownership stake of an affiliate owner may therefore exacerbate agency conflicts, thus suggesting that large affiliate sales can be detrimental to current and future investors.

We recognize, however, that there are benefits to be realized from permitting affiliate securityholders, such as company founders and employees, to sell in a Regulation A offering. Because entrepreneurs and other affiliates consider available exit options before participating in a new venture, permitting secondary sales increases their incentives to make the original investment, which may promote innovation and business formation.[952] Allowing exit could also facilitate efficient reallocation of capital and talents of entrepreneurs to new ventures.[953] Additionally, exit of a large affiliate shareholder could potentially result in a broader base of investors.

As noted above, the final rules relax the existing limitations on secondary sales by affiliates by eliminating the net income test for affiliate resales in existing Rule 251(b). We are concerned that this criterion may not be the best measure of financial health and investment opportunities for some issuers eligible for amended Regulation A and thus may inappropriately disadvantage those issuers, and their affiliates, with respect to secondary sales.[954] In particular, this change should benefit growth and R&D-intensive issuers that may experience longer periods of negative revenues. Several commenters supported the elimination of the net income test for affiliate resales, generally noting that some issuers may have net losses for several years, including due to high R&D costs.[955] We recognize that eliminating this criterion could lead to reduced investor protection due to

2010, Financial visibility and the decision to go private, Review of Financial Studies, 23(2), pp. 519–547.

[942] The dollar limits are broadly consistent with existing Regulation A, which limits sales by existing securityholders to $1.5 million, or 30% of the $5 million maximum offering size, in a 12-month period.

[943] Tier 1 offerings may still be subject to state law limitations on secondary sales and sales by affiliates.

[944] *See* ABA BLS Letter; B. Riley Letter; Canaccord Letter; CFIRA Letter 1; CFIRA Letter 2; Milken Institute Letter; MoFo Letter; WR Hambrecht + Co Letter.

[945] *See* Milken Institute Letter.

[946] *See* Massachusetts Letter 2; NASAA Letter 2; Carey Letter.

[947] *See* NASAA Letter 2 (supporting the proposed limits coupled with a board approval requirement in lieu of prohibiting resales entirely) and WDFI Letter (not expressing a preference for prohibiting resales entirely).

[948] *See* MCS Letter.

[949] *See* Easley, D., and M. O'Hara, 2004, Information and the cost of capital, Journal of Finance 59(4), pp. 1553–1583. We note that these potential effects may be limited to the extent that purchasers are aware that they may be transacting with better informed affiliates in the course of offerings with affiliate securityholder sale disclosures, in which case these informational asymmetries could be partially or fully reflected in lower security prices and lower proceeds at the time of the offering.

[950] *See* Jensen, M., and W. Meckling, 1976, Theory of the firm: Managerial behavior, agency costs and ownership structure, Journal of Financial Economics 3(4), pp. 305–360.

[951] *See* Core, J., R. Holthausen, and D. Larcker, 1999, Corporate governance, chief executive officer compensation, and firm performance, Journal of Financial Economics 51(3), pp. 371–406; Mehran, H., 1995, Executive compensation structure, ownership, and firm performance, Journal of Financial Economics 38(2), pp. 163–184.

[952] *See* Cumming, D., and J. MacIntosh, 2003, Venture-capital exits in Canada and the United States, University of Toronto Law Journal 53(2), pp. 101–199.

[953] *See* Zhang, J., 2011, The advantage of experienced start-up founders in venture capital acquisition: Evidence from serial entrepreneurs, Small Business Economics 36(2), pp. 187–208. *See also* Gompers, P., A. Kovner, J. Lerner, and D. Scharfstein, 2006, Skill vs. luck in entrepreneurship and venture capital: Evidence from serial entrepreneurs, Working paper No. w12592, National Bureau of Economic Research.

[954] *See* Davila, A., and G. Foster, 2005, Management accounting systems adoption decisions: Evidence and performance implications from early-stage/startup companies, Accounting Review 80(4), pp. 1039–1068 (suggesting that standard accounting measures are often poor indicators of financial health in small companies).

[955] *See* ABA BLS Letter; B. Riley Letter; Canaccord Letter; CFIRA Letter 1; Milken Institute Letter; MoFo Letter; WR Hambrecht + Co Letter.

insiders in Regulation A offerings being able to sell securities in issuers that have not reported net income. However, we note that the disclosures required for Regulation A offerings, as well as the overall limits on secondary sales during the initial 12-month period and subsequent limits on secondary sales by affiliates, should partly mitigate this cost.

The trade-off between enhanced liquidity and investor protection is different with respect to sales by non-affiliates, because these securityholders are less likely to have access to inside information, and their sales do not raise the incentive alignment concerns discussed above in the context of affiliate securityholders. The option to exit through a Regulation A offering provides additional liquidity to existing non-affiliate securityholders. During the initial 12-month period, the final rules enable selling securityholders to access liquidity through a Regulation A offering while ensuring that secondary sales at the time of such offerings are made in conjunction with new capital raising by the issuer. After the expiration of the initial 12-month period, the ability of non-affiliate securityholders to sell securities pursuant to a qualified Regulation A offering statement without limitation (except the maximum Regulation A offering size) should make Regulation A securities more attractive to prospective investors, which may encourage initial investment and increase capital formation. Non-affiliate securityholders who hold restricted securities purchased in reliance on another exemption will be able to sell them freely after a one-year holding period. Purchasers of the securities from such non-affiliate securityholders would not have the benefit of the more robust disclosure provisions of a Regulation A offering, where the seller will be subject to Section 12(a)(2) liability. Thus, allowing secondary sales in a Regulation A offering will provide an additional measure of protection for purchasers as compared to transactions in the secondary market.[956] Consequently, we believe that removing restrictions on non-affiliate securityholder sales in Regulation A offerings will not have an adverse effect on investor protection.

Although secondary sales increase the liquidity for existing securityholders, since secondary sales will be aggregated with issuer sales for purposes of compliance with the maximum offering amount permissible under the respective tiers, secondary sales may reduce the maximum amount of issuer sales in a Regulation A offering. The 30% limit on secondary sales imposed during the initial 12-month period partly mitigates this potential effect.

4. Investment Limitation

Regulation A currently does not place limits on the amount of securities that may be purchased by an investor. The proposed rules included a 10% investment limit for all investors in Tier 2 offerings. Several commenters recommended providing exceptions to the limit, or altering the limit, for certain types of investors, such as accredited investors,[957] and for securities that will be listed on an exchange upon qualification.[958]

We recognize that there are potential investor protection benefits as well as costs from imposing investment limits in Regulation A offerings. To help balance those benefits and costs, the final rules seek to focus these limits on those investors who may be less likely to be able to fend for themselves and sustain losses. Accordingly, non-accredited investors in Tier 2 offerings will be limited to purchases of no more than 10% of the greater of annual income or net worth (for natural persons) or the greater of annual revenue or net assets (for non-natural persons), as proposed.[959] In a change from the proposal, the final rules do not apply the investment limit to investors in Tier 2 offerings that are accredited investors as defined in Rule 501 of Regulation D. We believe that accredited investors, due to their level of income or net worth, are more likely to be able to withstand losses from an undiversified exposure to an individual offering.

We also recognize that there are costs associated with investment limits. In particular, the investment limitation could limit potential gains for non-accredited investors in Tier 2 offerings. The investment limitation could require some issuers to solicit a greater number of investors or to solicit additional accredited investors, which could impose additional costs on those issuers or limit capital formation if they are unable to attract additional investors.[960] Despite these costs, we believe that this limitation, as tailored in the final rules, is an appropriate means of protecting investors while promoting efficiency, competition and capital formation.

The investment limitation could also lead to a more dispersed non-accredited investor base or a higher proportion of accredited investors in the investor base to the extent that the 10% threshold impacts investor participation. This could facilitate increased liquidity as there would be more investors with which to trade. More diffuse ownership could also exacerbate the shareholder collective action problem and weaken external monitoring by non-affiliated shareholders to the extent that coordination costs with other shareholders increase. We do not believe, however, that either of these outcomes is a likely consequence of the 10% investment limit.

In a change from the proposal, the final rules exclude sales of securities that will be listed on a national securities exchange upon qualification from Tier 2 investment limitations. This provision may provide additional investment opportunities for some investors and may enhance capital formation for some issuers. We do not anticipate that this provision will reduce investor protection since such issuers will be required to meet the listing standards of a national securities exchange and become subject to ongoing Exchange Act reporting, resulting in a high level of investor protection.

As an alternative to the final rules, we considered imposing more restrictive investment limitations, as suggested by various comments, including extending investment limitations to Tier 1 offerings,[961] imposing a limit lower than 10% on ''all but the wealthiest, least risk averse'' investors,[962] or imposing a 10% investment limitation across investments in all Regulation A offerings rather than applying the limitation on a per offering basis.[963] Applying the investment limitation in Tier 1 offerings could marginally enhance investor protection, especially since these offerings will be subject to less extensive disclosure and transactional requirements. However, given that Tier 1 offerings will remain

[956] *See* Securities Act Section 3(b)(2)(D) (expressly providing for Section 12(a)(2) liability for any person offering or selling Section 3(b)(2) securities).

[957] *See* ABA BLS Letter; Andreessen/Cowen Letter; Canaccord Letter; Cornell Clinic Letter; Fallbrook Technologies Letter; Heritage Letter; Ladd Letter 2; Leading Biosciences Letter; McCarter & English Letter; MCS Letter; Milken Institute Letter; MoFo Letter; Paul Hastings Letter; Richardson Patel Letter; SVB Letter; WR Hambrecht + Co Letter.

[958] *See* Milken Institute Letter.

[959] Annual income and net worth would be calculated for individual purchasers as provided in the accredited investor definition in Rule 501 of Regulation D. *See* 17 CFR 230.501.

[960] An issuer would, however, be able to conduct a Tier 1 offering, which does not impose investment limitations.

[961] *See* CFA Institute Letter.

[962] *See* CFA Letter.

[963] *See* CFA Letter (not recommending this specifically, but noting this as one reason why the investment limit was not an adequate substitute for state review of Tier 2 offerings) and Cornell Clinic Letter.

subject to state registration requirements, it is unclear whether investment limits would significantly enhance investor protection in these offerings.[964] Moreover, adding the investment limitation in Tier 1 offerings could have an adverse effect on capital formation for the smallest Regulation A issuers, which may face greater hurdles than larger issuers in attracting a broad investor base.

The alternative of imposing a cap that is lower than 10% on ''all but the wealthiest, least risk averse'' investors may confer additional investor protection benefits on investors that are unable to withstand significant investment losses. However, this alternative could also limit some investors from pursuing attractive investment opportunities and limit capital formation for some issuers. Further, since risk preferences vary considerably among investors, objectively identifying ''risk averse'' investors in a way that is broadly applicable is a challenge. In contrast, the 10% investment limitation in the final rules that applies to all investors in a Tier 2 offering, except accredited investors, defined pursuant to Rule 501 of Regulation D, provides a standard that market participants can easily implement.

The alternative of imposing the 10% investment limitation that is aggregated across investments in all Regulation A offerings rather than applying the limitation on a per offering basis may strengthen investor protection. Because the risk profiles of different securities offerings by the same issuer are likely to be correlated, and some issuers may participate in multiple Regulation A offerings over time, such an alternative definition of the limitation may prevent a non-accredited investor from using a significant share (potentially, significantly in excess of 10%) of their net worth or income to establish a highly undiversified exposure to a single issuer. However, this alternative could also limit some investors from pursuing attractive investment opportunities and limit capital formation for issuers. Moreover, different offerings by the same issuer under Regulation A may have different risk profiles, depending on security type and class, thus for some investors, depending on their preferences, investing a larger aggregate amount in multiple offerings by the same issuer may be optimal.

Overall, while such additional restrictions may strengthen investor protection, their incremental contribution to investor protection may be small in light of other provisions of amended Regulation A. At the same time, such additional restrictions may prevent some investors from taking advantage of potentially beneficial investment opportunities and may limit the attractiveness of Regulation A to prospective issuers, reducing capital formation and competition benefits.

The final rules permit issuers to rely on an investor's representation that the investment represents no more than 10% of the greater of the investor's net worth and annual income, unless the issuer has knowledge that such representation is untrue. The ability to rely on investor representations should help mitigate potential costs that issuers could incur to comply with the investment limitation provisions. At the same time, we realize that investors might make inaccurate representations, whether intentionally or not, which could expose these investors to increased losses.

As an alternative to investor representations, we could have imposed additional requirements on the issuer to verify that investors in Tier 2 offerings are compliant with the 10% investment limit, as suggested by some commenters.[965] Such additional provisions could strengthen investor protections. At the same time, they would likely result in a disproportionate increase in the cost of compliance, especially for smaller issuers in Tier 2 offerings, and might deter some investors from participating in such offerings due to the potential burdens of the verification process and privacy concerns.

5. Integration

The final rules provide issuers with a safe harbor from integration that, with the exception of the addition of security-based crowdfunding transactions conducted pursuant to Section 4(a)(6) of the Securities Act, preserves the provisions of existing Regulation A.

We believe that the final rules provide issuers with valuable certainty as to the contours of offerings conducted before, or close in time with, Regulation A offerings. This certainty may be particularly beneficial for smaller issuers whose capital needs, and thus preferred capital raising methods, may change frequently.

As an alternative, we could have eliminated the integration safe harbor. We believe that the elimination of the safe harbor, however, would inject uncertainty into offerings conducted before, or close in time with, Regulation A offerings and would, in turn, decrease the utility of the exemption. Uncertainty as to the contours of offerings, as they relate to Regulation A, could possibly cause issuers to prefer other offering methods to Regulation A, which may have an effect on investor protection. For example, if issuers rely more on Regulation D, this alternative could result in investors receiving less information about an issuer before making an investment, thereby reducing investor protection. Instead, if issuers rely more on registered offerings, this alternative could potentially provide investors with the more extensive disclosure required of, and liability protections associated with, such offerings, although it would cause smaller issuers to incur the higher initial and ongoing costs associated with such offerings.

6. Treatment Under Section 12(g)

Existing rules currently do not exempt Regulation A securities from the requirements of Section 12(g), but the Proposing Release requested comment on whether we should adopt such an exemption. A number of commenters recommended exempting Regulation A securities from Section 12(g) of the Exchange Act,[966] and several commenters recommended changing or delaying the application of Section 12(g).[967] In a change from the proposed rules, the final rules exempt securities issued in a Tier 2 offering from the provisions of Section 12(g) for so long as the issuer remains subject to, and is current in, its periodic Regulation A reporting obligations as of its fiscal year end,[968] engages the services of a transfer agent registered with the Commission pursuant to Section 17A of the Exchange Act, and had a public float of less than $75 million as of the last business day of its most recently completed semiannual period, or, in the absence of a public float, had annual revenues of less than $50 million as of

[964] One commenter noted that the investment limitation is unnecessary with appropriate state oversight. *See* NASAA Letter 2.

[965] *See* Accredited Assurance Letter; CFA Letter; CFA Institute Letter; Cornell Clinic Letter; MCS Letter; WDFI Letter.

[966] *See* B. Riley Letter; CFIRA Letter 1; CFIRA Letter 2; Fallbrook Technologies Letter; Frutkin Law Letter; Guzik Letter 1 and Letter 3; Heritage Letter; IPA Letter; Ladd Letter 2; Milken Institute Letter; MoFo Letter; SBIA Letter (recommending that the trigger be ''raised or remedied,'' but not explicitly calling for elimination); U.S. Chamber of Commerce Letter; WR Hambrecht + Co Letter.

[967] *See* Heritage Letter; KVCF; McCarter & English Letter; Milken Institute Letter; MoFo Letter; Paul Hastings Letter; SBIA Letter.

[968] *See* Rule 12g5–1(a)(7).

its most recently completed fiscal year.[969]

The final rules are intended to provide sufficient disclosure to help investors make informed decisions while limiting the costs imposed on issuers. We believe that the initial and ongoing disclosures required for Tier 2 offerings in the final rules accomplish this objective and that the final rules also provide an appropriate balance between providing investor protection and promoting capital formation. The size of Tier 2 offerings, combined with the investment limitation and the ability to offer Tier 2 securities to the general public, may result in the number of an issuer's shareholders of record exceeding Section 12(g) thresholds. A conditional Section 12(g) exemption for small issuers of Tier 2 securities in such instances is expected to reduce the compliance cost for small issuers and facilitate capital formation and the creation of a broad investor base in offerings made pursuant to Regulation A by small Tier 2 issuers. This will benefit those small Regulation A issuers that are not seeking to list on a national securities exchange[970] and that may find the costs of Exchange Act reporting to be too high given their size.

Regulation A offerings may be particularly attractive to small private companies whose shareholder bases are approaching the Section 12(g) registration threshold. The conditional Section 12(g) exemption may enable small private issuers of Tier 2 securities under amended Regulation A to expand their shareholder base over time, as a result of secondary market trading, to the extent that such a market develops, or through subsequent security issuances, without incurring the costs associated with reporting company status.[971]

While the additional requirement to use a registered transfer agent will impose costs on issuers,[972] it should provide investor protection benefits by helping to ensure that securityholder records and secondary trades will be handled accurately. As it is a conditional exemption from Section 12(g), however, issuers that are not concerned with registration under the Exchange Act, perhaps because they do not believe that Exchange Act registration will be required as a result of a Regulation A offering, would not be required to retain the services of a registered transfer agent in order to conduct a Tier 2 offering.

The final rules also include an issuer size limit in the eligibility requirements for the Section 12(g) exemption for Tier 2 offerings, consistent with providing a conditional exemption tailored to facilitate small company capital formation. The issuer size limit may make Regulation A less attractive for larger issuers and issuers anticipating growth or capital appreciation that expect to reach Section 12(g) thresholds after conducting a Tier 2 offering or subsequent secondary market trading. The two-year transition period before reporting must begin may partly mitigate some of these costs to issuers. Due to the uncertainty about the future composition of the issuer and investor base in Tier 2 offerings, we cannot determine the proportion of Tier 2 issuers whose number of shareholders of record will exceed Section 12(g) thresholds or the proportion of those issuers that will not qualify for an exemption due to their size.[973]

Some issuers may be able to limit the number of shareholders of record by adopting a minimum investment size requirement. This may potentially limit the breadth of investor base and the availability of investment opportunities to some investors. We are not able to determine the extent to which the issuer size limit may affect overall capital formation and whether large or growth issuers will proceed with a Tier 2 offering or pursue a registered offering, a Regulation D offering or another method of financing. In addition, the issuer size limit may place at a competitive disadvantage those potential issuers that exceed the size limit but for which the costs of registration remain high, relative to potential issuers that are close to the size limit but that qualify for the Section 12(g) conditional exemption.

We recognize that there are costs associated with the conditional exemption adopted today. Under this exemption, some issuers in Tier 2 offerings with a large number of shareholders could avoid—potentially indefinitely—the comprehensive disclosure requirements of the Exchange Act, which may decrease the informational efficiency of prices and potentially result in less informed investment decisions by a larger number of investors than in the absence of a conditional Section 12(g) exemption. The issuer size limit partly mitigates this concern. For the same reasons, however, the inclusion of a conditional exemption from Section 12(g) may entice small issuers that would have otherwise generally preferred to raise capital in private offerings to enter the public markets through a Tier 2 offering pursuant to Regulation A.[974] In this regard, the conditional exemption could increase the availability of information about companies that would otherwise remain relatively obscure in the private markets. On balance, we believe that provisions such as the initial and periodic disclosure requirements and the investment limit in Tier 2 offerings appropriately balance investor protections and issuer compliance costs while facilitating the creation of a broad investor base in Tier 2 offerings for small issuers.

We have considered the alternative of providing a conditional exemption from Section 12(g) registration that does not

[969] *Id.*

[970] Issuers seeking to list on a national securities exchange will be required to register with the Commission under Section 12(b).

[971] *See* IPO Task Force. Based on two surveys, regulatory compliance costs of IPOs average $2.5 million initially, followed by an ongoing cost of $1.5 million per year.

[972] We lack the information to provide a precise quantitative estimate of transfer agent costs for Tier 2 issuers. However, we have some sources of information about transfer agent costs in analogous contexts.

According to the Securities Transfer Association (STA), the registered transfer agent industry is highly competitive and many of its members can develop business models that will suit the needs of small issuers and at the same time provide adequate protection to investors. The STA further noted that it did not anticipate most small issuers to require some of the services, such as the processing of dividends, that raise the cost of recordkeeping services. *See* STA letter on JOBS Act regulatory initiatives, *available at: http://www.sec.gov/comments/jobs-title-i/general/general-207.pdf.* STA estimated that monthly transfer agent fees would be $75-$300 for security-based crowdfunding issuers, which translates into annual fees of $900-$3600. *See* STA letter on proposed crowdfunding rules, *available at: http://www.sec.gov/comments/s7-09-13/s70913-96.pdf.* In 2014, average transfer agent and registrar fees amounted to approximately $9,000 in registered IPOs with offering sizes below $50 million, based on Thomson Reuters SDC data, excluding offerings from non-Canadian foreign issuers, blank-check companies, and investment companies. Offerings with proceeds below $1,000 are excluded to minimize measurement error. While estimates for security-based crowdfunding issuers are likely to underestimate the cost for a typical Tier 2 issuer, estimates for IPOs are likely to overestimate the cost of transfer agent services for a typical Tier 2 issuer. Costs of transfer agent services for a typical Tier 2 issuer may be in the range between the two sets of estimates.

[973] Based on the analysis by the staff of Division of Economic and Risk Analysis of 2013 data on registrants under Section 12(g), excluding issuers with a class of securities registered under Section 12(b), approximately three-quarters of Section 12(g) registrants would have been below the issuer size limit (defined similarly to smaller reporting company (SRC) criteria). These figures may not be representative of the proportion of issuers that would be below the issuer size limit among future Regulation A issuers that would potentially exceed Section 12(g) thresholds for the number of shareholders of record.

[974] For example, issuers may be more willing to raise capital publicly and become subject to some ongoing reporting requirements if such requirements are less costly to the issuer than the costs generally associated with the ongoing reporting requirements of the Exchange Act.

incorporate an issuer size limitation. Such an alternative would enable a broader class of potential Tier 2 issuers to remain exempt from Exchange Act registration. Larger Regulation A issuers could generate a more vibrant OTC trading market, providing enhanced liquidity to those issuers that may not otherwise be of sufficient size to make listing on a national market exchange cost-effective. Providing an exemption from Section 12(g) could provide incentive for these larger issuers to broaden their investor base while still providing the ongoing disclosure of the Tier 2 reporting regime. This could result in potentially beneficial effects on capital formation, competition, and informational efficiency of prices. However, such an alternative would potentially create a class of securities permanently exempt from Exchange Act registration regardless of issuer size and thus subject to less extensive disclosure requirements than public reporting companies, which may affect investor protection.

D. Offering Statement

1. Electronic Filing and Delivery

The final rules preserve the current three-part structure of Form 1–A but make various revisions and updates to the form to streamline the information included in the form. Since most of this information is already contained in other offering materials, the additional reporting burden in Part I of the Form 1–A should not entail significantly higher costs in terms of time or out-of-pocket expenses.[975]

Under existing Regulation A, offering materials are submitted to the Commission in paper form. The final rules require electronic submission of offering materials. Electronic submission is expected to offer benefits to issuers and investors. Paper documents are difficult to process both for the Commission and for investors. Electronic filing is therefore expected to reduce processing delays and costs associated with the current paper filing system, improve the overall efficiency of the filing process for issuers, benefit investors by providing them with faster access to the offering statement, and allow offering materials to be more easily accessed and analyzed by regulators and analysts.

We anticipate that electronic access to offering materials may promote the informational efficiency of prices of Regulation A securities.[976] Evidence, obtained from the adoption of EDGAR for 10–K filings by reporting companies, suggests that the use of EDGAR has favorably affected small investors.[977] Moreover, the adoption of XML format for Part I of Form 1–A, which captures key information about the issuer and the offering, should allow more efficient access to information and more systematic tracking of offering details by investors, analysts, other market participants and regulators. The XML format for Part I will provide a convenient and efficient means of gathering information from issuers and transmitting it to EDGAR.[978]

At the same time, we recognize that an electronic filing requirement may impose compliance costs on issuers, particularly, issuers that have not previously used the EDGAR system, which include filing Form ID (the application form for access codes to permit EDGAR filing) [979] and converting filings into EDGAR format. Some of these compliance burdens will be mitigated by the savings of printing and mailing costs.

Some commenters have expressed investor protection concerns in relation to the access equals delivery model (discussed in Section II.C.1) arising from the perceived challenge of finding these materials on EDGAR and not requiring delivery 48 hours in advance of sale in all circumstances.[980] As discussed above, we do not believe that access to EDGAR generally has proven to be a challenge for investors in registered offerings since the adoption of Securities Offering Reform in 2005, nor do we believe that it will be a challenge for investors under Regulation A or raise investor protection concerns, particularly in light of our final delivery requirements (including, where applicable, the inclusion of hyperlinks to offering materials on EDGAR that must be provided to investors by issuers and intermediaries). Additionally, given that the final offering circular delivery obligations generally affect investors only after they have made their investment decisions and that, taking into account advancements in technology and expanded use of the Internet, investors will have access to the final offering circular upon its filing, we believe that using a means other than physical delivery to satisfy the final offering circular delivery obligation will not have an adverse effect on investor protection. Overall, we believe that there will be benefits to issuers of streamlining delivery requirements for the final offering circular, consistent with similar updates to delivery requirements for registered offerings.[981]

2. Disclosure Format and Content

Under the existing Regulation A, issuers can choose among three models for providing narrative disclosure in Part II of the offering statement: Model A, Model B, and Part I of Form S–1. Similar to the proposal, the final rules eliminate Model A but preserve Model B, with certain changes to the contents, and Part I of Form S–1.[982]

We believe that eliminating Model A, which uses a question-and-answer format, may benefit investors by avoiding possible confusion that could result from the lack of uniformity of information presented in the question-and-answer format. Several commenters disagreed with the elimination of the Model A format, recommending that an updated version of the Model A disclosure format be retained.[983] The Model A format may be easier to understand for non-accredited investors, who may lack the sophistication to analyze information presented in alternative disclosure formats. Compared to other formats, the Model A format might also result in lower costs of initial preparation of the offering statement, including, in some instances,

[975] For the purposes of the Paperwork Reduction Act (''PRA''), we estimate that compliance with the requirements of amended Form 1–A will result in a burden of approximately 750 hours per response (compared to the current burden associated with Form 1–A of 608 hours per response). We estimate that compliance with the requirements of amended Form 1–A will result in an aggregate annual burden of 140,625 hours of in-house personnel time and an aggregate annual cost of $18,750,000 for the services of outside professionals. *See* Section IV below.

[976] In the case of reporting companies, one study found that EDGAR e-filing was associated with an increase in the speed with which information was incorporated into share prices (thus, increased informational efficiency of prices) and presented evidence of a larger market reaction to 10–K and 10–Q filings in the EDGAR period relative to the pre-EDGAR period. *See* Griffin, P., 2003, Got information? Investor response to Form 10–K and Form 10–Q EDGAR filings, Review of Accounting Studies 8(4), pp. 433–460.

[977] One study has examined the effect of the switch to EDGAR filing for annual reports on Form 10–K on small versus large investors. *See* Asthana, S., S. Balsam, and S. Sankaraguruswam, 2004, Differential response of small versus large investors to 10–K filings on EDGAR, Accounting Review 79(3), pp. 571–589.

[978] *See* Part I (Notification) of Form 1–A. As discussed more fully in Section II.C.3.a., the cover page and Part I of current Form 1–A would be converted into, and form the basis of, the XML-based fillable form.

[979] For purposes of the PRA, Form ID is estimated to result in 0.15 burden hours per form, for an additional aggregate annual burden due to the rule amendments of 28.20 hours of in-house personnel time. *See* Section IV.

[980] *See* Massachusetts Letter 2; NASAA Letter 2; WDFI Letter.

[981] *See* Securities Offering Reform, Rel. No. 33–8591.

[982] *See* Section II.C.3.b for a more detailed description.

[983] *See* BIO Letter; Karr Tuttle Letter; NASAA Letter 2; Verrill Dana Letter 1; WDFI Letter.

lessen the need to retain outside securities counsel.[984] While a question-and-answer format may lower the cost of initial preparation, it often requires more substantive revisions after filing and before qualification, in order for the disclosure to sufficiently address the form requirements. We believe that most of the benefits associated with the lower cost of initial preparation are negated subsequently during the qualification process. Consequently, we are not persuaded that there are sufficient benefits to retaining the Model A format.

The changes to Model B include updated disclosure requirements, including a new section containing management discussion and analysis of the issuer's liquidity, capital resources and business operations. While these updates may impose costs on the issuer, they are expected to increase investor protection and informational efficiency of prices by providing important information to investors. The updated disclosure requirements are, however, generally designed to assist issuers with more guidance as to the required disclosures that, while they may increase the cost to issuers associated with the initial preparation of the offering circular, should lower the overall cost of, and time to, qualification, when the process is considered in its entirety. Overall, we believe that the availability of two alternative disclosure formats—a revised Model B format and Part I of Form S–1—provides sufficient flexibility to issuers in choosing their disclosure format while preserving the benefits of disclosure of relevant information to prospective investors.

Some commenters suggested eliminating all three disclosure formats and instead creating a new disclosure format similar to Part I of Form S–1 that would reference Regulation S–K requirements (with reduced disclosure requirements in some instances).[985] Another commenter recommended reducing the disclosure requirements for offerings of $2 million or less,[986] while another suggested increasing disclosure requirements as an issuer grows in size and complexity.[987] We recognize that scaling the disclosure requirements for Form 1–A, as suggested by commenters, could ease compliance costs for Regulation A issuers. However, additional scaling of disclosure requirements within tiers may reduce the comparability of disclosures within the same tier and result in pricing inefficiencies.

3. Audited Financial Statements

The final rules require issuers conducting Tier 2 offerings to include audited financial statements in their offering materials. Audited financial statements should provide investors in Tier 2 offerings with greater confidence in the accuracy and quality of the financial statements of issuers seeking to raise larger amounts of capital. This, in turn, could benefit issuers by lowering the cost of capital or increasing the amount of capital supplied by investors.

We recognize that audited financial statements could also entail significant costs to issuers, and that the costs of an audit could discourage the use of Tier 2 offerings. Based on data from registered IPOs below $50 million in 2014 by issuers that would have been potentially eligible for amended Regulation A, average total accounting fees amounted to 1.65% of gross offering proceeds, where reported separately.[988]

The final rules require issuers in Tier 2 offerings to include audited financial statements in their offering circulars that are audited in accordance with either the auditing standards of the American Institute of Certified Public Accountants (AICPA) (referred to as U.S. Generally Accepted Auditing Standards or GAAS) or the standards of the Public Company Accounting Oversight Board (PCAOB), as suggested by some commenters.[989] We expect this provision in the final rules to provide issuers with flexibility that may help contain issuer compliance costs, compared to requiring financial statements that are audited in accordance with the standards of the PCAOB. As noted above,[990] because AICPA rules would require an audit of a Regulation A issuer conducted in accordance with PCAOB standards to also comply with U.S. GAAS, an issuer who includes financial statements audited in accordance with PCAOB standards will likely incur additional incremental costs compared with an issuer who includes financial statements audited only in accordance with U.S. GAAS. However, we assume that an issuer would only elect to comply with both sets of auditing standards because it has concluded that the benefits of doing so (for example, to facilitate Exchange Act registration) justify these additional incremental costs.

As an alternative, we could have not required the audited financial statements until after the first year of operation as a ''public startup company'' or indefinitely for issuers that are pre-revenue or that have paid-in capital, assets and revenues below a modest threshold, as suggested by commenters.[991] While this alternative may decrease issuer compliance costs, it may also lower the accuracy of information provided to investors in Tier 2 offerings, resulting in reduced investor protection. The large offering limit in Tier 2 offerings may make some of the fixed costs of an audit relatively less burdensome. In addition, we note that smaller issuers may opt to forgo the cost of an audit and elect a Tier 1 offering or a Regulation D offering, which does not require audited financial statements.

On the other hand, other commenters advised the Commission to require audited financial statements for Tier 1 offerings.[992] While we acknowledge that requiring audited statements is likely to result in stronger investor protections due to reduced likelihood of fraudulent financial statements being presented, this alternative would likely place a relatively greater burden on smaller issuers due to the fixed-cost nature of some of the audit costs. Also, given the relatively low maximum offering size for Tier 1, this could result in Tier 1 offerings becoming not cost-effective.

4. Other Accounting Requirements

The final rules permit Canadian issuers to prepare financial statements in accordance with either U.S. GAAP or International Financial Reporting

[984] *See* Karr Tuttle Letter and WDFI Letter. The Karr Tuttle Letter also refers to the experience of issuers in Rule 504 offerings, indicating that NASAA's Form U–7, upon which Model A is based, has proved convenient for issuers in Rule 504 offerings qualified by states without the use of securities counsel.

[985] *See* Canaccord Letter; CFIRA Letter 1; E&Y Letter; Ladd Letter 2; McCarter & English Letter; WR Hambrecht + Co Letter.

[986] *See* Campbell Letter.

[987] *See* SVB Letter.

[988] This estimate is based on Thomson Reuters SDC data on IPOs with issue dates in 2014, excluding offerings from non-Canadian foreign issuers, blank check companies, and investment companies. Offerings with proceeds below $1,000 are excluded to minimize measurement error. Issuers of interests in claims on natural resources, which also would not be eligible for amended Regulation A, were not separately eliminated due to data constraints. Accounting fees include the cost of preparing accounting statements, in addition to the cost of an audit. We also note that costs incurred by issuers in registered IPOs may not be representative of costs incurred by issuers in Tier 2 offerings. We lack the information to provide a quantitative estimate of audit costs that would be incurred by Regulation A issuers in Tier 2 offerings.

[989] *See* ABA BLS Letter; BDO Letter; Canaccord Letter; Deloitte Letter; E&Y Letter; KPMG Letter; McGladrey Letter; MoFo Letter; WR Hambrecht + Co Letter.

[990] *See* Section II.C.3.

[991] *See* Public Startup Co. Letter 3 (also suggesting three tiers, where at least the first two would not require this) and Public Startup Co. Letter 11.

[992] *See* Guzik Letter 1 and Milken Institute Letter.

Standards (IFRS) as issued by the International Accounting Standards Board (IASB). This is expected to benefit Canadian issuers that currently use IFRS as issued by the IASB by helping such issuers contain compliance costs associated with Regulation A offerings, compared to requiring Canadian issuers to prepare financial statements in accordance with U.S. GAAP. Several commenters specifically supported allowing Canadian issuers to prepare their financial statements in accordance with IFRS as issued by the IASB.[993]

5. Continuous and Delayed Offerings

The final rules explicitly allow for continuous or delayed offerings.[994] As a result, it is now clear that eligible issuers have greater flexibility to select the timing of their offerings. Such flexibility is expected to benefit issuers by allowing them to adjust their capital raising based on macro-economic factors or company conditions.[995] These factors should facilitate financing decisions and capital market efficiency. For example, existing research on Rule 415 offerings in the registered offering market shows that costs of intermediation in shelf offerings, and consequently the cost of raising equity through shelf registration, are lower than through traditional registration.[996] The final rules condition the ability to sell securities in a continuous or delayed Tier 2 offering on being current with ongoing reporting requirements at the time of sale. This should not impose incremental costs on eligible issuers as they already file periodic updates and amendments.

The final rules restrict all ''at the market'' secondary offerings. Existing Regulation A prohibited primary ''at the market'' offerings, but did not necessarily restrict such offerings by selling securityholders. Some commenters suggested allowing such offerings, including primary offerings by the issuer.[997] We recognize that not allowing secondary ''at the market'' offerings may limit flexibility for those issuers that are uncertain about the offering price that will attract sufficient investor demand. However, the benefit of the new restriction as it applies to secondary sales is that it helps ensure that issuers do not lose their Regulation A exemption due to unanticipated market factors by inadvertently offering securities in an amount that exceeds the offering limitation. Future offerings made in reliance on the final rules may provide more information to determine whether a robust market capable of supporting ''at the market'' offerings develops and whether the Regulation A exemption could be an appropriate method for such offerings in the future.

6. Nonpublic Review of Draft Offering Statements

Under the final rules, issuers whose securities have not been previously sold pursuant to a qualified offering statement under Regulation A or an effective registration statement under the Securities Act will be permitted to submit to the Commission a draft offering statement for non-public review, so long as all such documents are publicly filed not later than 21 calendar days before qualification. The option of non-public submission of a draft offering statement is expected to reduce the barriers to entry for issuers using Regulation A. In this regard, a potential issuer could reduce the amount of time between disclosing possibly sensitive information to its competitors in its offering statement and the related sale of its securities. Furthermore, companies that are tentative about conducting an offering could start the qualification process and then abandon the offering any time before the initial public filing without receiving the related stigma in the market. To the extent that this accommodation lowers the barriers to entry, it may encourage capital formation and competition. Moreover, we do not believe that the option of draft offering statement submission will significantly affect investor protection. Disclosure requirements are unchanged for issuers that elect the option of non-public submission of draft offering statement. The initial non-public statement, all non-public statement amendments, and all correspondence with Commission staff regarding such submissions must be publicly filed and available on EDGAR as exhibits to the offering statement not less than 21 calendar days before qualification of the offering statement.

E. Solicitation of Interest (''Testing the Waters'')

Under existing Regulation A, testing the waters is permitted only until the offering statement is filed with the Commission, and solicitation material is required to be filed prior to or concurrent with first use. The final rules permit issuers to test the waters and use solicitation materials both before and after the offering statement is filed, subject to issuer compliance with the rules on filing information and disclaimers.[998] Under the final rules, testing the waters materials will be required to be included as an exhibit to the offering statement at the time of initial submission or filing with the Commission, and updated thereafter.

In general, allowing issuers to gauge interest through expanded testing the waters will reduce uncertainty about whether an offering could be completed successfully. Allowing solicitation prior to filing enables issuers to determine market interest in their securities before incurring the costs of preparing and filing an offering statement. If after testing the waters, the issuer is not confident that it will attract sufficient investor interest, the issuer can consider alternate methods of raising capital and thereby avoid the costs of an unsubscribed or under-subscribed offering. Allowing testing the waters at any time prior to qualification of the offering statement, rather than only prior to filing of the offering statement with the Commission, may increase the likelihood that the issuer will raise the desired amount of capital. This option may be useful for smaller issuers, especially early-stage issuers, first-time issuers, issuers in lines of business characterized by a considerable degree of uncertainty, and other issuers with a high degree of information asymmetry. This provision may attract certain issuers—those that may be uncertain about the prospects of raising investor capital—to consider using amended Regulation A when they might not otherwise, thus potentially promoting competition for investor capital as well as capital formation in the Regulation A market.

Expanding the permissible use of testing the waters communications could also increase the type and extent of information available to investors, which could lead to more efficient prices for the offered securities. The final rules permit testing the waters for an expanded period of time compared to the baseline. As a result, it may be easier

[993] *See* ABA BLS Letter; Canaccord Letter; NASAA Letter 2; MoFo Letter; PwC Letter.

[994] Existing Regulation A allows for continuous or delayed offerings to the extent permitted by Rule 415. Since Rule 415 only discusses ''registered offerings,'' the reference to it may have caused confusion as to the scope of its application in Regulation A offerings.

[995] *See* Bayless, M., and S. Chaplinsky, 1996, Is there a window of opportunity for seasoned equity issuance? Journal of Finance 51(1), pp. 253–278.

[996] *See* Bethel, J., and L. Krigman, 2008, Managing the cost of issuing common equity: The role of registration choice, Quarterly Journal of Finance and Accounting 47(4), pp. 57–85. We recognize that the evidence based on registered offerings may not be indicative of the effects on Regulation A offerings.

[997] *See* OTC Markets Letter and Paul Hastings Letter.

[998] As noted in Section II.H.3. above, some state securities laws may impose limitations on the use of testing the waters by Tier 1 issuers.

for investors to become aware of a larger and more diverse set of investment opportunities in private offerings, which may allow these investors to more efficiently allocate their capital. The net effect could be to enhance both capital formation and allocative efficiency. Further, requiring issuers using testing the waters solicitations after the offering statement is publicly filed to provide the offering statement with the testing the waters materials (or provide information about where it can be accessed), and to update it and redistribute updates in the event of material changes, will allow investors to make informed investment decisions.

We recognize that there may also be potential costs associated with expanding the use of testing the waters communications. If the contents of the offering circular differ substantively from the material distributed through testing the waters communications, and if investors rely on testing the waters materials, this may lead investors to make less informed investment decisions. Some commenters were concerned that the expanded use of permissible testing the waters may facilitate misleading statements to investors and may lead to a heightened risk of fraud.[999] We believe, however, that this potential investor protection concern is mitigated by the application of Section 12(a)(2) liability to Regulation A offerings and the general anti-fraud provisions of the federal securities laws.

We considered the alternative, suggested by some commenters,[1000] of requiring submission and review of testing the waters materials before or concurrent with first use, rather than at the time the offering statement is submitted for non-public review or filed, which could aid regulators in detecting fraudulent solicitation of interest communications, potentially resulting in investor protection benefits. However, requiring initial submission and review of testing the waters materials prior to their use could dissuade issuers, particularly smaller or less experienced issuers, from engaging in testing the waters communications, thereby undermining many of the benefits of permitting such communications discussed above.

We also considered the views of other commenters who suggested we relax some of the proposed requirements for the use of testing the waters. For example, we could have treated the solicitation materials as non-public when filed with the Commission, at least until the offering statement is qualified,[1001] or removed the requirement for public filing of solicitation materials for all Regulation A offerings or for Tier 2 offerings.[1002] Issuers that have elected to use testing the waters communications have already incurred the cost of preparing the materials, so the incremental direct cost of the requirement to file the materials with the Commission will be low. We recognize that permitting issuers to file the solicitation materials non-publicly with the Commission could reduce the indirect costs of some issuers by limiting the ability of the issuer's competitors to discover information about the issuer.

However, we note that this information may become available to competitors in any event through the solicitation process and removing the requirement to publicly file the materials may result in adverse effects on the protection of investors to the extent that it may facilitate fraudulent statements by issuers to all or a selected group of investors that may fail to compare the statements in the solicitation materials against the offering circular. On balance, we believe that the final rule's requirements governing the use of testing the waters communications appropriately balance the goals of providing flexibility to issuers and protection to investors.

F. Ongoing Reporting

Currently, Regulation A issuers do not have ongoing reporting obligations. The final rules prescribe an ongoing reporting regime for issuers that conduct Tier 2 offerings that requires, in addition to annual reports on Form 1–K, semiannual reports on Form 1–SA, current event reporting on Form 1–U, and notice to the Commission of the suspension of ongoing reporting obligations on Form 1–Z.

These reporting requirements will have benefits and costs. These reporting requirements should strengthen investor protection and decrease the extent of information asymmetries between issuers and investors in the Regulation A market, relative to existing Regulation A. Requiring ongoing disclosures for Tier 2 offerings will provide investors with periodically updated information, allowing them to identify investment opportunities best suited for their level of risk tolerance and re-evaluate the issuer's prospects through time, resulting in better informed investment decisions and improved allocative efficiency of capital. By standardizing the content, timing, and format of these disclosures, the amendments to Regulation A will make it easier for investors to compare information across issuers, both within and outside of the new Regulation A market.

The additional reporting requirements for Tier 2 offerings increase the availability of public information that can be used for valuing securities. A reduction in information risk due to improvements in disclosure can lower the issuer's cost of capital.[1003] Because there are no resale restrictions, some securities issued in amended Regulation A offerings are likely to be quoted on the OTC market, and required ongoing disclosure requirements will provide investors with updated information about their underlying value, and as a result, lower the inherent asymmetric information risks associated with trading in this market.[1004] The enhanced information environment should facilitate more informationally efficient pricing and better liquidity for amended Regulation A securities.[1005] Tier 2 ongoing disclosure requirements should also provide timely and relevant issuer information at a lower cost to broker-dealers that initiate quotations and make markets in these securities. Increased secondary market liquidity can make securities more attractive to prospective investors, which can promote capital formation. Hence, there may be significant benefits for capital formation from the ongoing reporting requirements in the final rules.

Although reporting obligations for Tier 2 issuers are less extensive than for reporting companies, we recognize that they will still result in a significant direct cost of compliance. One commenter estimated the qualification and reporting costs of a Tier 2 issuer to be approximately $400,000 in the first year and $200,000 annually thereafter (per issuer).[1006] For the purposes of the PRA, we estimate that compliance with

[999] *See* Massachusetts Letter 2; NASAA Letter 2; WDFI Letter.

[1000] *See* Massachusetts Letter 2; NASAA Letter 2; WDFI Letter.

[1001] *See* Heritage Letter and Ladd Letter 2.

[1002] *See* BIO Letter and MoFo Letter.

[1003] *See* Diamond, D., and R. Verrecchia, 1991, Disclosure, liquidity, and the cost of capital, Journal of Finance 46(4), pp. 1325–1359; Easley, D., and M. O'Hara, 2004, Information and the cost of capital, Journal of Finance 59(4), 1553–1583; Easley, D., S. Hvidkjaer, and M. O'Hara, 2002, Is information risk a determinant of asset returns? Journal of Finance 57(5), pp. 2185–2221.

[1004] *See* Ang, A., A. Shtauber, and P. Tetlock, 2013, Asset pricing in the dark: The cross section of OTC stocks, Review of Financial Studies 26(12), pp. 2985–3028.

[1005] *See* Graham, J., C. Harvey, and S. Rajgopal, 2005, The economic implications of corporate financial reporting, Journal of Accounting and Economics 40(1–3), pp. 3–73; Durnev, A., R. Morck, and B. Yeung, 2003, Value enhancing capital budgeting and firm-specific stock return variation, Journal of Finance 59(1), pp. 65–106.

[1006] *See* IPA Letter.

the requirements of Forms 1–K, 1–SA, and 1–U for issuers with an ongoing reporting obligation under Regulation A will result in an aggregate annual burden of 115,351 hours of in-house personnel time and an aggregate annual cost of $13,450,272 for the services of outside professionals.[1007]

In addition to the direct costs of preparing the mandatory disclosures, issuers of securities in Tier 2 offerings will be subject to indirect disclosure costs of revealing to their competitors and other market participants information about their business not previously required to be disclosed.[1008] These disclosures can inform the issuer's competitors about the issuer's strategic decisions regarding investment, financing, management and other aspects of business. For issuers seeking to reduce such costs of disclosure, Rule 506(c) of Regulation D could be more appealing. Based on the scope of disclosures required, an issuer's combination of direct and indirect costs of disclosure is likely to be lowest for a Regulation D Rule 506 offering, followed by a Tier 1 offering, a Tier 2 offering and, finally, a registered public offering.

We evaluate below the different provisions of the ongoing reporting requirements and the alternatives we have considered.

1. Periodic and Current Event Reporting Requirements

Currently, Regulation A issuers do not have ongoing reporting obligations. Tier 2 issuers in a Regulation A offering will have periodic and current event reporting obligations under the final rules. As noted above, these ongoing reporting requirements will result in both direct and indirect costs to Tier 2 issuers.

Commenters made various suggestions for expanding the ongoing disclosure requirements for Tier 2 issuers. For example, several commenters suggested we require quarterly reporting instead of semi-annual reporting.[1009] Another commenter suggested we require officers, directors and controlling shareholders of issuers that offer securities under Regulation A to make ongoing disclosure of transactions in company securities, similar to reporting on Forms 3, 4 and 5 and Schedules 13D, 13G and 13F in the registered securities context.[1010] While additional requirements that would bring the Tier 2 disclosure obligations closer to the reporting company disclosure obligations are likely to have informational efficiency and investor protection benefits, they are also likely to make Regulation A more costly and less attractive to prospective issuers and may not promote capital formation as much as the final rules.

Other commenters recommended reducing the continuing disclosure burden on Tier 2 issuers [1011] or making continuing disclosure requirements contingent upon factors other than offering tier, such as whether the issuer has taken steps to foster a market in its securities.[1012] These alternatives would likely reduce compliance costs for Tier 2 issuers; however, they also may cause investors to have less information upon which to make investment decisions, resulting in weaker investor protections and less informationally efficient prices.

Other commenters recommended requiring ongoing disclosures for issuers in Tier 1 offerings, including disclosures at a level lower than is required for Tier 2,[1013] ongoing disclosure with yearly audited financials,[1014] or some unspecified continuous disclosure obligation.[1015] Such alternatives, particularly if accompanied by the requirement of audited financial statements, would increase the availability and quality of financial information provided to investors in Tier 1 offerings and strengthen investor protection by enabling investors to make better informed decisions. However, due to the fixed component of disclosure costs, and the likely smaller size of Tier 1 offerings relative to Tier 2 offerings, such requirements may limit capital formation and place Tier 1 issuers at a competitive disadvantage relative to Tier 2 issuers. We note that small issuers that value informational efficiency gains from ongoing disclosures above the cost of such disclosures have the option of conducting a Tier 2 offering.

2. Termination and Suspension of Reporting and Exit Reports

The final rules permit issuers in Tier 2 offerings that have filed all periodic and current reports required by Regulation A for a specified period to suspend their ongoing reporting obligation under Regulation A at any time after completing reporting for the fiscal year in which the offering statement was qualified, if the securities of each class to which the offering statement relates are held of record by fewer than 300 persons and offers or sales made in reliance on a qualified Tier 2 offering statement are not ongoing. For banks or bank holding companies, the termination threshold is fewer than 1,200 persons, consistent with Title VI of the JOBS Act. The option to cease reporting could be beneficial, especially for issuers that do not seek secondary market liquidity and for smaller issuers that find the costs of compliance with the ongoing disclosure requirements to be a relatively greater burden. At the same time, the option might be costly for investors because it will decrease the amount of information available about the issuer, making it more difficult to monitor the issuer and accurately price its securities or to find a trading venue that will allow liquidation of the investment. The public availability of information in bank regulatory filings is expected to mitigate some of these effects for bank issuers undertaking Regulation A offerings. Termination of reporting also might make it easier for inside shareholders to use an informational advantage to the detriment of minority outside investors.

The final rules require Tier 1 issuers to notify the Commission upon completion of their offerings by filing Form 1–Z (exit report). Issuers in Tier 2 offerings will be required to provide this information on Form 1–Z at the time of filing the exit report, if they have not previously provided this information on Form 1–K as part of their annual report. Form 1–Z contains limited summary information about the issuer and the completed offering and, therefore, should not impose substantial additional compliance costs on the issuer.[1016] The enhanced availability of Form 1–Z information is likely to benefit investors and facilitate evaluation of Regulation A market activity. For example, this information should allow the Commission and others to assess whether issuers have been able to raise the projected amount of capital in Regulation A offerings. We recognize, however, that, since information about the completed offering has value to an issuer's

[1007] *See* Section IV below.

[1008] *See* Verrecchia, R., 2001, Essays on disclosure, Journal of Accounting and Economics 32, pp. 97–180.

[1009] *See* Massachusetts Letter 2; NASAA Letter 2; OTC Markets Letter; WDFI Letter.

[1010] *See* OTC Markets Letter.

[1011] *See* Heritage Letter and IPA Letter.

[1012] *See* Heritage Letter.

[1013] *See* Guzik Letter 1 (suggesting that Tier 1 ongoing disclosure requirements could parallel Tier 2's requirements, but without the requirement for semiannual reports).

[1014] *See* Ladd Letter 2.

[1015] *See* SVB Letter.

[1016] For the purposes of the PRA, we estimate that filing the Form 1–Z exit report will result in an aggregate annual burden of 235.5 hours of in-house personnel time. *See* Section IV below.

competitors, its disclosure may also impose an indirect cost on issuers.

3. Exchange Act Registration

Generally, an issuer of Regulation A securities would not be subject to Exchange Act reporting obligations unless it separately registers a class of securities under Section 12 of the Exchange Act or conducts a registered public offering. This results in significantly lower costs of periodic reporting for Regulation A issuers relative to reporting companies.[1017]

The final rules permit issuers seeking to register a class of Regulation A securities under the Exchange Act to do so by filing a Form 8–A in conjunction with the qualification of a Form 1–A that follows Part I of Form S–1 or the Form S–11 disclosure model in the offering circular. In some circumstances this option may provide more flexibility, for instance, with respect to testing the waters, to issuers seeking to register a class of securities. The obligation to file ongoing reports in a Tier 2 offering is automatically suspended upon registration of a class of securities under Section 12 of the Exchange Act or registration of an offering of securities under the Securities Act. Given that Exchange Act reporting obligations are more extensive than those of Regulation A, the entry of such issuers into the Exchange Act reporting system upon qualification of a Regulation A offering statement is expected to have a beneficial effect on investor protection and informational efficiency of prices. While registration pursuant to the Exchange Act is likely to impose additional costs on issuers, only issuers that opt into such registration are affected. As a result, we anticipate that only those issuers for whom the perceived benefits of registration justify the accompanying costs will elect to use this provision.

G. Insignificant Deviations

Under the final rules, offerings with ''certain insignificant deviations from a term, condition or requirement'' of Regulation A remain exempt from registration. This is the same as the rules in existing Regulation A. As a result, the only change from the baseline is that these rules will likely apply to a greater number of offerings due to the expanded availability of amended Regulation A. Further, as in existing Regulation A, the final rules explicitly classify as significant those deviations that are related to issuer eligibility, aggregate offering price, offers and continuous or delayed offerings. This provision benefits investors by providing certainty about the provisions from which the issuer may not deviate without losing the exemption. At the same time, it enables issuers to continue to rely on the exemption and obtain its capital formation benefits even if they have an ''insignificant deviation'' from the final rules. This provision may be especially beneficial for issuers with limited experience with Regulation A offerings as their limited experience may make them more susceptible to an inadvertent error. In this way, the provision may encourage more issuers to engage in Regulation A transactions and thereby facilitate capital formation.

H. Bad Actor Disqualification

The final rules amend Rule 262 to include bad actor disqualification provisions in substantially the same form as adopted under Rule 506(d).[1018] The final rules specify that the covered person's status is tested at the time of filing of the offering statement. Consistent with the disqualification provisions of Rule 506(d), the final rules add two new disqualification triggers to those in existing Regulation A: Commission cease-and-desist orders relating to violations of scienter-based anti-fraud provisions of the federal securities laws or Section 5 of the Securities Act and the final orders and bars of certain state and other federal regulators. While these provisions may impose an incremental cost on issuers and other covered persons relative to the cost imposed by the disqualification provisions of existing Regulation A, they should strengthen investor protection from potential fraud.

If one of these new triggering events occurred prior to the effective date of the final rules, the event will not cause disqualification, but instead must be disclosed on a basis consistent with Rule 506(e). This approach will not preclude the participation of bad actors whose disqualifying events occurred prior to the effective date of the final rules, which could expose investors to the risks that arise when bad actors are associated with an offering. These risks to investors may be partly mitigated since investors will have access to relevant information that could inform their investment decisions. Disclosure of triggering events may also make it more difficult for issuers to attract investors, and issuers may experience some or all of the impact of disqualification as a result. Some issuers may, accordingly, choose to exclude involvement by prior bad actors to avoid such disclosures.

We expect that the bad actor disqualification provisions in the final rules will lead most issuers to restrict bad actor participation in Regulation A offerings, which could help reduce the potential for fraud in these types of offerings and thus strengthen investor protection compared with an alternative of not including bad actor disqualification provisions. If disqualification standards lower the risk premium associated with the risk of fraud due to the presence of bad actors in securities offerings, they could also reduce the cost of capital for issuers that rely on amended Regulation A. In addition, the requirement that issuers determine whether any covered persons are subject to disqualification might reduce the need for investors to do their own investigations and could therefore increase efficiency.

The disqualification provisions also impose costs on issuers and covered persons. Issuers that are disqualified from using amended Regulation A may experience an increased cost of capital or a reduced availability of capital, which could have negative effects on capital formation. In addition, issuers may incur costs related to seeking disqualification waivers from the Commission and replacing personnel or avoiding the participation of covered persons who are subject to disqualifying events. Issuers also might incur costs to restructure their share ownership to avoid beneficial ownership of 20% or more of the issuer's outstanding voting equity securities, calculated on the basis of voting power, by individuals subject to disqualifying events.

As discussed above, the final rules also provide a reasonable care exception on a basis consistent with Rule 506(d).[1019] We anticipate that the reasonable care exception would result in benefits and costs, compared with an alternative of not providing a reasonable care exception. For example, a reasonable care exception could facilitate capital formation by encouraging issuers to proceed with Regulation A offerings in situations in which issuers otherwise might have been deterred from relying on Regulation A if they risked potential liability under Section 5 of the Securities Act for unknown disqualifying events. This exception also could increase the potential for fraud, compared with an alternative of not providing a reasonable care exception, by limiting issuers' incentives to determine whether bad

[1017] Ongoing compliance costs were estimated to be $1.5 million per year, following an IPO, according to two surveys cited in the IPO Task Force report.

[1018] *See* 17 CFR 230.506(d).

[1019] *See* Proposed Rule 262(b)(4).

actors are involved with their offerings. We also recognize that some issuers might incur costs associated with conducting and documenting their factual inquiry into possible disqualifications. The rule's flexibility with respect to the nature and extent of the factual inquiry required could allow an issuer to tailor its factual inquiry as appropriate to its particular circumstances, thereby potentially limiting costs.

One commenter recommended revising the look-back periods for disqualifying events to run from the time of sale rather than the time of filing of the offering statement.[1020] These changes would relax the bad actor disqualification standard, by allowing bad actors to participate in Regulation A offerings during the qualification process. We believe that timing application of the bad actor disqualification rules to the time of filing of the offering statement, as opposed to the time of qualification, is therefore more appropriate under the final rules.

I. Relationship With State Securities Law

The final rules preempt state registration and qualification requirements for Tier 2 offerings but preserve these requirements for Tier 1 offerings, consistent with state registration of Regulation A offerings of up to $5 million under existing Regulation A.

The GAO Report found that compliance with state securities review and qualification requirements was one of the factors that appeared to have influenced the infrequent use of Regulation A by small businesses.[1021] Various commenters supporting preemption of state securities laws in the final rules noted that state review of offering statements is a significant impediment to the use of Regulation A and that the process of qualification in multiple states will remain inefficient despite NASAA's implementation of a coordinated review program.[1022] More broadly, commenters as well as the GAO Report indicated that the existing regime of federal and state qualification has been a significant disincentive to the use of Regulation A for capital raising. With respect to time and compliance costs associated with state qualification, we believe preemption will likely reduce issuers' costs, although we lack comprehensive, independent data to estimate the precise amount. Only a few commenters provided specific monetary estimates of cost components. One commenter indicated that a revenue-generating business seeking to conduct a debt or equity offering under existing Regulation A can produce a conforming offering statement for state and federal review for approximately $50,000.[1023] According to another commenter, an issuer seeking state registration in 50 states would incur $80,000 to $100,000 in legal fees.[1024]

As one commenter noted, ''[t]he challenges posed by the necessity of responding to both federal and state reviews and coordinating overlapping but potentially inconsistent comments and approvals have helped to make the existing Regulation A scheme unworkable for most smaller companies.'' [1025] Preemption of state securities review and qualification requirements for Tier 2 offerings will eliminate the burdens of responding to multiple reviews and thus provide for a more streamlined review process than exists under existing Regulation A. We expect that this, in turn, will make Tier 2 a more attractive capital raising option for issuers than existing Regulation A. Accordingly, we believe that by eliminating the requirement for state qualification, the final rules' preemption for Tier 2 offerings will result in greater use of amended Regulation A and thereby facilitate capital formation.

We recognize that commenters were divided on the issue of preemption, and those who objected to preemption of state securities review and qualification requirements cited benefits of state review.[1026] These include additional investor protection benefits arising from the localized knowledge and resources of state regulators that may aid in detecting fraud and facilitating issuer compliance.[1027] Some of these commenters also noted that the launch of NASAA's coordinated review program could streamline state review of offerings among participating states.

We acknowledge that the preemption of state qualification for Tier 2 offerings may have an impact on investor protection by eliminating one level of government review. In addition, merit-based review of offerings undertaken by some states may, in some cases, provide a level of investor protections different from the disclosure-based review

[1020] *See* KVCF Letter.

[1021] *See* GAO Report. The GAO Report also cites other factors that may have discouraged issuer use of the Regulation A exemption, including a comparatively low $5 million offering limitation, a slow and costly filing process associated with Commission qualification, and the availability of other exemptions under the federal securities laws.

A recent study performs a comparison of Rule 506 offerings with Rule 505 and Rule 504 offerings that ''suggests that the Blue Sky law preemption feature unique to Rule 506 offerings has greater value to issuers than the unique features of Rule 504 or Rule 505 offerings.'' *See* Ivanov, V., and S. Bauguess, 2013, Capital raising in the U.S.: An analysis of unregistered offerings using the Regulation D exemption, 2009–2012, *available at: http://www.sec.gov/divisions/riskfin/whitepapers/dera-unregistered-offerings-reg-d.pdf.*

See also Leading Biosciences Letter referencing recommendations supporting preemption from the SEC Government-Business Forum on Small Business Capital Formation in 2011 and 2012. Similar recommendations were made in the final report of the SEC Forum on Small Business Capital Formation in 2013, *available at: http://www.sec.gov/info/smallbus/gbfor32.pdf.*

[1022] *See* ABA BLS Letter; Andreessen/Cowen Letter; Almerico Letter; B. Riley Letter; BIO Letter; Campbell Letter; Canaccord Letter; CFIRA Letter 1; CFIRA Letter 2; Congressional Letter 3; DuMoulin Letter; Eng Letter; Fallbrook Technologies Letter; Gilman Law Letter; Guzik Letter 1; Hart Letter; Heritage Letter; Huynh Letter; IPA Letter; Edwards Wildman Letter; Kisel Letter; Kretz Letter; KVCF Letter; Ladd Letter 2; Leading Biosciences Letter; McCarter & English Letter; Methven Letter; Milken Institute Letter; MoFo Letter; Moloney Letter; New Food Letter; OTC Markets Letter; Paul Hastings Letter; Palomino Letter; Public Startup Co. (several letters); REISA Letter; Richardson Patel Letter; SBIA Letter; Staples Letter; Sugai Letter; SVB Letter; SVGS Letter; Unorthodocs Letter; U.S. Chamber of Commerce Letter; Verrill Dana Letter 2; Warren Letter; WR Hambrecht + Co Letter.

[1023] *See* Groundfloor Letter. This commenter does not separately estimate the component of the cost due to state registration.

[1024] *See* Letter from Paul Hastings, LLP, November 26, 2013.

Another commenter referenced one issuer's offering in the State of Washington in the amount of $750,000, with legal and accounting expenses estimated at $10,000 and the offering statement prepared without outside securities counsel and reviewed by the state within less than three months. *See* WDFI Letter. We do not believe that this cost estimate would be representative of costs for issuers registering in multiple states rather than a single state or for issuers involving outside securities counsel.

[1025] *See* ABA BLS Letter.

[1026] *See* ASD Letter; Cornell Clinic Letter; CFA Letter; CFA Institute Letter; Groundfloor Letter (arguing that the Commission should at least evaluate NASAA's coordinated review program for 12 months); Karr Tuttle Letter (acknowledging that state preemption may still be necessary for states not participating in NASAA's new coordinated review program); MCS Letter; Congressional Letter 2; Congressional Letter 4; NASAA Letter 1; NASAA Letter 2; NASAA Letter 3; NDBF Letter; NYIPB Letter; ODS Letter; PRCFI Letter; Scherber Letter; Secretaries of State Letter; Massachusetts Letter 1; Massachusetts Letter 2; Tavakoli Letter; TSSB Letter; WDFI Letter. One commenter stated its view that the Commission's proposal to preempt state regulatory review contained little consideration of the adverse costs that come with preemption, particularly the potential harm to investors, including harm investors might incur in the absence of state review in the area of small and thinly traded company offerings. *See* NASAA Letter 2.

[1027] According to the 2014 NASAA enforcement report for 2013, securities violations related to unregistered securities sold by unlicensed individuals, including fraudulent offerings marketed through the Internet, remain an important enforcement concern. The report does not detail the number and category of violations by type of exemption from registration. *See* NASAA Enforcement Report, *available at: http://www.nasaa.org/wp-content/uploads/2011/08/2014-Enforcement-Report-on-2013-Data_110414.pdf.*

undertaken by the Commission. State regulators may also have a better knowledge of local issuers, which could help in detecting fraud, especially in offerings by small, localized issuers. If investors require higher returns because of a perceived increase in the risk of fraud as a result of preemption, issuers may face a higher cost of capital. We are unable to predict how the amendments to Regulation A will affect the incidence of fraud that may arise in Regulation A offerings.

Several factors could mitigate these potential impacts. First, under Section 18(c), the states retain the ability to require the filing with them of any documents filed with the Commission and to investigate and bring enforcement actions with respect to fraudulent transactions. Second, we believe that amended Regulation A provides substantial protections to purchasers in Tier 2 offerings. Under the final rules, a Regulation A offering statement will continue to provide substantive narrative and financial disclosures about the issuer. Further, the final rules require offering statements to be qualified by the Commission before an issuer can conduct sales. Additional investor protections would be afforded by Regulation A's limitations on eligible issuers and bad actor disqualification provisions. The final rules for Tier 2 offerings provide further protection by requiring audited financial statements in the offering circular, ongoing reporting, and an investment limitation for purchasers who do not qualify as accredited investors.

The anticipated costs and benefits of state preemption will depend on key offering characteristics and issuer disclosure requirements. In particular, smaller offerings with a narrow investor base, such as those expected to be conducted under Tier 1, are more likely to be concentrated in fewer states and to benefit from geographic-specific information of state regulators as part of the review process.[1028] In contrast, larger offerings that seek a broader investor base, such as those expected to be conducted under Tier 2, are more likely to span multiple states. For Tier 2 offerings, the additional disclosure, audited financial statements, and transactional requirements relative to Tier 1 offerings are expected to provide an additional layer of investor protection, thus reducing the need for, and the expected benefits of, state review. State preemption for Tier 2 offerings should lower the compliance burdens imposed on issuers, and partly offset the costs of the increased disclosure and transactional requirements.

In general, we expect that issuers in Tier 1 offerings will face significantly lower offering costs as a result of not being subjected to the requirements of audited financial statements and ongoing reporting in the final rules. For these offerings, the local knowledge of state regulators is anticipated to add value to the review process to the extent that the issuer and the investor base are more likely to be localized. Thus, state qualification is more likely to have incremental investor protection benefits in Tier 1 offerings relative to Tier 2 offerings. Moreover, to the extent that Tier 1 offerings are more likely to be concentrated in fewer states, the cost of complying with state review procedures is likely to be diminished for these types of offerings.

Some commenters also pointed to the increased burden on Commission resources as a cost of state preemption.[1029] Compared with the baseline of the existing Regulation A, we anticipate a possible increase in the burden on Commission resources as a result of the increase in the Regulation A maximum offering size and other provisions intended to make Regulation A more attractive to prospective issuers. However, we believe this increase would also occur under the alternative of no state preemption for Tier 2 offerings. While state review of Tier 2 offerings could potentially confer incremental investor protection benefits to the extent a thorough Commission staff review is constrained by the increased burden on agency resources, overall we do not believe this effect will be substantial.

As an alternative to preemption for Tier 2 offerings, we considered the option of state qualification by one state or a subset of states or the option of state review under NASAA's coordinated review program.[1030] According to one commenter, the coordinated review program creates value by defining concrete service standards regarding the timeliness of various steps of the qualification process and by introducing more legal certainty.[1031] According to another commenter, the coordinated review program will eliminate costs of identifying and addressing individual state requirements and will provide an expedient registration process.[1032] We recognize that the coordinated review process ultimately may reduce processing time and streamline certain state requirements for issuers registering in multiple states when compared to independent review conducted by individual states. To date, however, we are aware of only a few issuers that have utilized the coordinated review process, so currently there is limited evidence available to us to evaluate the effectiveness and timeliness of coordinated review, especially in the event that more potential Regulation A issuers seek state qualification under this process. While it is possible that the coordinated review process may reduce costs for issuers as compared to individual state review and qualification, it would add cost and complexity for issuers seeking an exemption under amended Regulation A when compared to Commission review and qualification alone. To the extent that disclosure or merit review (if applicable to one of the participating jurisdictions in which the issuer is seeking to offer securities) standards of participating jurisdictions impose more extensive requirements on the issuer than Commission rules, some issuers may incur additional compliance expense or require additional time to address comments. In light of the recent efforts of state securities regulators to address concerns about the cost of state review and qualification of Regulation A offerings, however, the ongoing implementation and development of the coordinated review program, particularly as it may operate within Tier 1 offerings, may, in the future, provide additional data that will aid our future evaluation of whether such a program could effectively operate within the context of larger, more national Tier 2 offerings.

[1028] We believe that issuers conducting Tier 1 offerings are more likely to be smaller companies whose businesses revolve around products, services, and a customer base that will more likely be located within a single state or region or a small number of geographically dispersed states. For example, based on our analysis, issuers of securities in the seven offering statements qualified by the Commission pursuant to Regulation A in 2014 indicated, on average, that they were seeking qualification in approximately five states per offering. The financial statements provided by these issuers further indicated, on average, that issuers had approximately $1.2 million in assets. No issuer indicated assets greater than $3.6 million, while two issuers indicated assets of less than $20,000. We recognize, however, that the characteristics of Tier 1 issuers in Tier 1 offerings relying on amended Regulation A in the future may differ from the characteristics of issuers that rely on existing Regulation A (for example, due to the higher maximum offering size for Tier 1 offerings in the final rules, compared with the maximum offering size in existing Regulation A).

[1029] *See* WDFI Letter and NASAA Letter 2.

[1030] A description of NASAA's coordinated review program can be found at: *http://www.nasaa.org/industry-resources/corporation-finance/coordinated-review/regulation-a-offerings/.*

[1031] *See* Groundfloor Letter.

[1032] *See* WDFI Letter.

We believe the final rules strike appropriate balance between mitigating cost and time demands on issuers and providing investor protections.

IV. Paperwork Reduction Act

A. Background

Certain provisions of the final rules contain ''collection of information'' requirements within the meaning of the Paperwork Reduction Act of 1995 (PRA).[1033] We published a notice requesting comment on the collection of information requirements in the Proposing Release, and we submitted these requirements to the Office of Management and Budget (OMB) for review in accordance with the PRA and its implementing regulations.[1034] While several commenters provided qualitative comments on the possible costs of the proposed rules and amendments, we did not receive comments on our PRA analysis and thus are adopting our estimates substantially as proposed, except as otherwise noted herein. The titles for the collections of information are:

(1) ''Regulation A (Form 1–A and Form 2–A)'' (OMB Control Number 3235–0286);

(2) ''Form 1–K'' (OMB Control Number 3235–0720);

(3) ''Form 1–SA'' (OMB Control Number 3235–0721);

(4) ''Form 1–U'' (OMB Control Number 3235–0722);

(5) ''Form 1–Z'' (OMB Control Number 3235–0723);

(6) ''Form 8–A'' (OMB Control Number 3235–0056);

(7) ''Form ID'' (OMB Control Number 3235–0328); and

(8) ''Form F–X'' (OMB Control Number 3235–0379).[1035]

An agency may not conduct or sponsor, and a person is not required to respond to, a collection of information unless it displays a currently valid OMB control number. We applied for OMB control numbers for the new collections of information in accordance with 44 U.S.C. 3507(j) and 5 CFR 1320.13, and OMB assigned a control number to each new collection, as specified above. Responses to these new collections of information would be mandatory for issuers raising capital under Regulation A.

The hours and costs associated with preparing disclosure, filing forms, and retaining records constitute reporting and cost burdens imposed by the collections of information. In deriving estimates of these hours and costs, we recognize that the burdens likely will vary among individual issuers based on a number of factors, including the stage of development of the business, the amount of capital an issuer seeks to raise, and the number of years since inception of the business. We believe that some issuers will experience costs in excess of the average and some issuers may experience less than the average costs.

B. Estimated Number of Regulation A Offerings

Data regarding current market practices may help identify the potential number of offerings that will be conducted in reliance on the final rules.[1036] We estimate that there are currently approximately 26 Regulation A offering statements filed by issuers per year.[1037] While it is not possible to predict with certainty the number of offering statements that will be filed by issuers relating to offerings made in reliance on amended Regulation A, for purposes of this PRA analysis, we estimate that the number will be 250 offerings statements per year. We base this estimate on (i) the current approximate number of annual Form 1–A filings under the existing rules, plus (ii) 65 percent of the estimated number of registered offering of securities that would have been eligible to be conducted under Regulation A,[1038] plus (iii) an additional 16 offerings that either would not otherwise occur or would have been conducted in reliance on another exemption from Securities Act registration, such as Regulation D.[1039] For purposes of this PRA analysis, we assume that each offering statement for a unique Regulation A offering that is filed represents a unique issuer, such that approximately 250 issuers are estimated to conduct Regulation A offerings each year under the final rules.

C. PRA Reporting and Cost Burden Estimates

1. Regulation A (Form 1–A and Form 2–A)

Currently, Regulation A requires issuers to file a Form 1–A: Offering Statement and a Form 2–A: Report of Sales and Uses of Proceeds with the Commission. Regulation A has one administrative burden hour associated with it, while current Form 1–A is estimated to take approximately 608 hours to prepare and Form 2–A is estimated to take approximately 12 hours to prepare.[1040] We do not anticipate that the one administrative burden hour associated with Regulation A will change as a result of the final rules. As discussed more fully below, we believe the burden hours associated with Form 1–A will change, while Form 2–A and the associated burden hours are eliminated as a result of today's proposal.[1041]

Under the final rules, an issuer conducting a transaction in reliance on Regulation A will be able to conduct either a Tier 1 offering or a Tier 2 offering.[1042] In either case, a Regulation A issuer will continue to be required to file with the Commission specified disclosures on a Form 1–A: Offering Statement.[1043] An issuer will also be required to file amendments to Form 1–A to address comments from Commission staff and to disclose material changes in the disclosure previously provided to the Commission or investors.[1044] In light of the electronic filing requirements for Regulation A offering materials discussed above,[1045] issuers are no longer required to file a manually signed copy of Form 1–A with the Commission.[1046] Issuers are, however, required to manually sign a copy of the offering statement before or at the time of non-public submission or filing that must be retained by the issuer for a period of five years and produced to the Commission, upon request.[1047] As issuers are currently required to manually sign the Form 1–A and file it with the Commission, we do not anticipate that the Form 1–A retention requirement adopted in the final rules will alter an issuer's compliance

[1033] 44 U.S.C. 3501 *et seq.*

[1034] 44 U.S.C. 3507(d) and 5 CFR 1320.11.

[1035] Although the final rules do not amend Form F–X, the total burden hours associated with that form may increase minimally as a result of the increased number of issuers relying on Regulation A. The Commission submitted the revised burden estimate for Form F–X to OMB for review in accordance with the PRA, although the potential minimal increase in burden hours was not noted in the Proposing Release.

[1036] *See* Section III. above for a discussion of the data regarding current market practices.

[1037] From 2009 through 2014, there were 158 Form 1–As filed with the Commission.

[1038] *See* figures and graphs for registered offerings cited in Section III.B.b. above (citing approximately 320 registered initial public offerings or follow-on offerings in calendar year 2014 that would have been potentially eligible to be conducted under amended Regulation A).

[1039] *See* figures and graphs for registered and exempt offerings under Regulation D cited in Section III.B.1.a.ii. above (citing 11,228 issuances under Regulation D in calendar year 2014 that would have been potentially eligible to be conducted under amended Regulation A).

[1040] *See* Form 1–A at 1; Form 2–A at 1.

[1041] *See* discussion in Section II.E. above.

[1042] *See* discussion in Section II.B.3. above.

[1043] *See* Rule 252.

[1044] *See* Rule 252(f).

[1045] *See* discussion in Section II.C.1. above.

[1046] *See* discussion in Section II.C.3.d. above.

[1047] *See* Instruction 2 to Signatures in Form 1–A.

burden. As adopted, Form 1–A is similar to existing Form 1–A. In some instances, Form 1–A, contains fewer disclosure items than existing Form 1–A (*e.g.,* Part I (Notification) of Form 1–A does not require disclosure of ''Affiliate Sales''; Part II (Offering Circular) of Form 1–A requires a description of the issuer's business for a period of three years, rather than five years). Part II of Form 1–A no longer permits disclosure in reliance on the Model A disclosure format, but directs issuers to follow the provisions of Model B (renamed ''Offering Circular''), Part I of Form S–1, or, where applicable, Part I of Form S–11.[1048] In other instances, Form 1–A contains more disclosure items than existing Form 1–A (*e.g.,* Part I of Form 1–A requires additional disclosure of certain summary information regarding the issuer and the offering; Part II of Form 1–A requires more detailed management discussion and analysis of the issuer's liquidity and capital resources and results of operations). Form 1–A requires disclosure similar to that required in a Form S–1 registration statement for registered offerings under the Securities Act, but with fewer disclosure items (*e.g.,* it requires less disclosure about the compensation of officers and directors, and less detailed management discussion and analysis of the issuer's liquidity and capital resources and results of operations) and, under certain circumstances, Form 1–A does not require issuers to file audited financial statements.[1049]

We expect that issuers relying on Regulation A for Tier 1 offerings of up to $20 million in a 12-month period will largely be at a similar stage of development to issuers relying on existing Regulation A and will therefore not experience an increased compliance burden with Form 1–A. Given the increased annual offering amount limit of $50 million for Tier 2 offerings, however, we expect that issuers conducting such offerings pursuant to Regulation A may be at a more advanced stage of development than issuers offering securities under Tier 1. In such cases, the complexity of the required disclosure and, in turn, the burden of compliance with the requirements of Form 1–A may be greater for some issuers than for issuers relying on existing Form 1–A. We believe that the burden hours associated with amended Form 1–A will be greater than the current estimated 608 burden hours per response but will not be as great as the current estimated 972.32 burden hours per response for Form S–1. We therefore estimate that the total burden to prepare and file Form 1–A, as adopted today, including any amendments to the form, will increase on average across all issuers in comparison to existing Form 1–A to approximately 750 hours.[1050] We estimate that the issuer will internally carry 75 percent of the burden of preparation and that outside professionals retained by the issuer at an average cost of $400 per hour will carry 25 percent.[1051]

We estimate that compliance with the requirements of a Form 1–A will require 187,500 burden hours (250 offering statements × 750 hours/offering statement) in aggregate each year, which corresponds to 140,625 aggregated hours carried by the issuer internally (250 offering statements × 750 hours/offering statement × 0.75) and aggregated costs of $18,750,000 (250 offering statements × 750 hours/offering statement × 0.25 × $400) for the services of outside professionals. As stated above, we estimate that the proposed amendments to Regulation A will not change the one administrative burden hour associated with the review of Regulation A and will require 250 burden hours (250 offering statements × one hour/offering statement) in aggregate each year, which corresponds to 187 aggregated hours carried by the issuer internally (250 offering statements × 0.75) and aggregated costs of $25,000 (250 offering statements × one hour/offering statement × 0.25 × $400) for services of outside professionals. When combined with the estimates for Form 1–A, the administrative burden hour results in an estimated total compliance burden of 751 hours per offering statement and an estimated annual compliance burden of 187,750 hours (250 offering statements × 751 hours/offering statement) and aggregated costs of $18,775,000 (250 offering statements × 751 hours/offering statement × 0.25 × $400).

2. Form 1–K: Annual Report

Under the final rules, any issuer that conducts a Tier 2 offering pursuant to Regulation A is required to file an annual report with the Commission on Form 1–K: Annual Report.[1052] A manually signed copy of Form 1–K must be executed by the issuer and related signatories before or at the time of electronic filing, retained by the issuer for a period of five years and, if requested, produced to the Commission.[1053] We do not anticipate that the requirement to retain a manually signed copy of Form 1–K will affect an issuer's compliance burden. We believe the compliance burden associated with disclosure provided in Form 1–K will be less than the compliance burden associated with reporting required under Exchange Act Sections 13 or 15(d). We also believe the burden is more analogous to the compliance burden attendant to Form 1–A. Unlike the disclosure required in Form 1–A, however, offering-specific disclosure in Form 1–K is not required. Additionally, under certain circumstances, an issuer will be required to disclose information similar to the information previously required of issuers on Form 2–A.[1054] Unlike the disclosure previously required on Form 2–A, however, an issuer is not required to provide disclosure about the use of proceeds. We estimate that the burden to prepare and file a Form 1–K will be less than that required to prepare and file a Form 1–A. We estimate that compliance with Form 1–K will result in a burden of 600 hours per response.[1055] We further estimate that 75 percent of the burden of preparation will be carried by the issuer internally and that 25 percent will be carried by outside professionals retained by the issuer at an average cost of $400 per hour. While we do not know the exact number of issuers that will conduct Tier 2 offerings in reliance on amended Regulation A, we estimate 75 percent of all issuers filing a Form 1–A (or 188 issuers, 250 issuers × .75) will conduct Tier 2 offerings, enter the Regulation A ongoing reporting regime and therefore be required to file Form 1–K.[1056]

We estimate that compliance with the requirements of Form 1–K for issuers with an ongoing reporting obligation under Regulation A will require 112,800 burden hours (188 issuers × 600 hours/issuer) in the aggregate each year, which corresponds to 84,600 hours carried by the issuer internally (188 issuers × 600

[1048] *See* discussion at Section II.C.3.b. above.

[1049] *See* discussion in Section II.C.3.b(2). above.

[1050] By comparison, we estimate the burden per response for preparing Form S–1 to be 972.32 hours. *See* Form S–1, at 1.

[1051] The costs of retaining outside professionals may vary depending on the nature of the professional services. For purposes of this PRA analysis, however, we estimate that such costs will be an average of $400/hour, which is consistent with the rate we typically estimate for outside legal services used in connection with public company reporting.

[1052] *See* Rule 257(b)(1).

[1053] *See* General Instruction C to Form 1–K and related discussion in Section II.E.1.c. above.

[1054] *Id.*

[1055] We estimate that the burden of preparing the information required by Form 1–K will be approximately ¾ of the burden for filing Form 1–A due to the lack of offering-specific disclosure and an issuer's ability to update previously provided disclosure.

[1056] This estimate includes any special financial reports required to be filed on Form 1–K.

hours/issuer × 0.75) and costs of $11,280,000 (188 issuers × 600 hours/issuer × 0.25 × $400) for the services of outside professionals.

3. Form 1–SA: Semiannual Report

Under the final rules, any issuer that conducts a Tier 2 offering in reliance on Regulation A will be required to file a semiannual report with the Commission on Form 1–SA: Semiannual Report.[1057] A manually signed copy of the Form 1–SA must be executed by the issuer and related signatories before or at the time of electronic filing, retained by the issuer for a period of five years and, if requested, produced to the Commission.[1058] We do not anticipate that the requirement to retain a manually signed copy of the Form 1–SA will affect an issuer's compliance burden. Issuers must provide semiannual updates on Form 1–SA, which, like a Form 10–Q,[1059] consists primarily of financial statements and MD&A. Unlike Form 10–Q, Form 1–SA does not require disclosure regarding quantitative and qualitative market risk or controls and procedures.[1060] We estimate, however, that on balance the reduction in burden attributable to eliminating these two items in Form 1–SA will be offset by the increased burden associated with requiring financial statement disclosure covering six months, rather than three months. We therefore believe the per response compliance burden of Form 1–SA will be similar to the compliance burden for issuers filing a Form 10–Q under the Exchange Act.[1061] Therefore, for purposes of this PRA analysis, we estimate that the burden to prepare and file a Form 1–SA will equal the burden to prepare and file Form 10–Q, which we have previously estimated as 187.43 hours per response.[1062] Unlike Form 1–K, Form 1–SA does not require the provision of audited financial statements. We therefore believe, in comparison to Form 1–K, issuers filing a Form 1–SA will be able to prepare more of the required disclosures internally. Accordingly, we estimate that 85 percent of the burden of preparation will be carried by the issuer internally and that 15 percent will be carried by outside professionals retained by the issuer at an average cost of $400 per hour.

We estimate that compliance with the requirements of Form 1–SA for issuers with an ongoing reporting obligation under Regulation A will require 35,237 burden hours (188 issuers × 187 hours/issuer/filing × 1 filing/year) in the aggregate each year, which corresponds to 29,952 hours carried by the issuer internally (188 issuers × 187 hours/issuer/filing × 1 filing/year × 0.85) and costs of $2,113,872 (188 issuers × 187 hours/issuer/filing × 1 filing/year × 0.15 × $400) for the services of outside professionals.[1063]

4. Form 1–U: Current Reporting

Under the final rules, any issuer that conducts a Tier 2 offering in reliance on Regulation A is required to promptly file current reports on Form 1–U with the Commission.[1064] A manually signed copy of the Form 1–U must be executed by the issuer and related signatories before or at the time of electronic filing, retained by the issuer for a period of five years and, if requested, produced to Commission.[1065] We do not anticipate that the requirement to retain a manually signed copy of the Form 1–U will affect an issuer's compliance burden. Issuers are required to file such reports in the event they experience certain corporate events, much the same way as issuers subject to an ongoing reporting obligation under the Exchange Act file current reports on Form 8–K.[1066] The requirement to file a Form 1–U, however, will be triggered by significantly fewer corporate events than those that trigger a reporting requirement on a Form 8–K, and the form itself will be slightly less burdensome for issuers to fill out.[1067] Thus, the frequency of filing the required disclosure and the burden to prepare and file a Form 1–U will be considerably less than for Form 8–K. We estimate that the burden to prepare and file each current report will be 5 hours. While we do not know for certain how often an issuer would experience a corporate event that would trigger a current report filing on Form 1–U, we estimate that many issuers may not experience a corporate event that triggers reporting, while others may experience multiple events that trigger reporting. On average, we estimate that an issuer will be required to file one current report annually.[1068] Therefore, we estimate that an issuer's compliance with Form 1–U will result in an annual aggregate burden of 5 hours (1 current report annually × 5 hours per current report) per issuer.

As with Form 1–SA, we estimate that 85 percent of the burden of preparation will be carried by the issuer internally and that 15 percent will be carried by outside professionals retained by the issuer at an average cost of $400 per hour. We estimate that compliance with the requirements of Form 1–U will require 940 burden hours (188 issuers × 1 current report annually × 5 hours per current report) in aggregate each year, which corresponds to 799 hours carried by the issuer internally (188 issuers × 5 hours/issuer/year × 0.85) and costs of $56,400 (188 issuers × 5 hours/issuer/year × 0.15 × $400) for the services of outside professionals.

5. Form 1–Z: Exit Report

Under the final rules, all Regulation A issuers are required to file a notice under cover of Form 1–Z: Exit Report. Issuers conducting Tier 1 offerings will be required to file Part I of Form 1–Z that discloses information similar to the information previously required of issuers on Form 2–A.[1069] Issuers conducting Tier 2 offerings will also be required to disclose the same information as issuers conducting Tier 1 offerings in Part I of Form 1–Z, unless previously reported by the issuer on Form 1–K. Issuers conducting Tier 2 offerings will also be required to complete Part II of Form 1–Z in order to notify investors and the Commission that it will no longer file and provide annual reports pursuant to the requirements of Regulation A.[1070] In Tier 2 offerings, an issuer's obligations to file ongoing reports could be terminated at any time after completion of reporting for the fiscal year in which the offering statement was qualified, if the securities of each class to which the offering statement relates are held of record by fewer than 300 persons and offers and sales made in reliance on a qualified offering statement are not ongoing.[1071] A manually signed copy of the Form 1–Z must be executed by the issuer and related signatories before or at the time of electronic filing, retained

[1057] *See* Rule 257(b)(3).

[1058] *See* General Instruction C to Form 1–SA and related discussion in Section II.E.1.c(2). above.

[1059] 17 CFR 249.308a.

[1060] *See* discussion in Section II.E.1.c(2). above.

[1061] Issuers will, however, have to file Form 1–SA, a semiannual report, less frequently than Form 10–Q, a quarterly report.

[1062] *See* Form 10–Q, at 1.

[1063] This estimate includes any special financial reports required to be filed on Form 1–SA.

[1064] *See* Rule 257(b)(4).

[1065] *See* General Instruction C to Form 1–U and related discussion in Section II.E.1.c(3). above.

[1066] We estimate the burden per response for preparing a Form 8–K to be 5.71 hours. *See* Form 8–K, at 1.

[1067] *See* discussion at Section II.E.1.c(3). above.

[1068] We have previously estimated that on average issuers file one current report on Form 8–K annually. Although we believe that the frequency of filing a Form 1–U will be considerably less than a Form 8–K, we are estimating that each issuer will be required to file one Form 1–U per year.

[1069] *See* discussion in Section II.E.4.b. above.

[1070] *See* Rule 257(d).

[1071] *See* Rule 252(f)(2).

by the issuer for a period of five years and, if requested, produced to Commission.[1072] We do not anticipate that the requirement to retain a manually signed copy of the Form 1–Z will affect an issuer's compliance burden. We estimate that all of the issuers conducting Tier 1 offerings (63 issuers, 250 total estimated issuers × 0.25) and 50 percent of issuers conducting Tier 2 offerings (94 issuers, 188 issuers with an ongoing reporting obligation × 0.50) will file a Form 1–Z in the second fiscal year after qualification of the offering statement (157 total issuers, 63 + 94). Although we believe that the vast majority of issuers subject to ongoing reporting under Regulation A will qualify for termination in the second fiscal year after qualification, we believe that only half or 50 percent of such issuers will actually choose to terminate their reporting obligations. An issuer may have many reasons for continuing its reporting obligations, such as a desire to facilitate continued quotations in the over-the-counter (OTC) markets pursuant to revisions to Exchange Act Rule 15c2–11.[1073]

The Form 1–Z is similar to the Form 15 that issuers file to provide notice of termination of the registration of a class of securities under Exchange Act Section 12(g) or to provide notice of the suspension of the duty to file reports required by Exchange Act Sections 13(a) or 15(d).[1074] Therefore, we estimate that compliance with the Form 1–Z will result in a similar burden as compliance with Form 15 that is, a burden of 1.50 hours per response. We estimate that 100% of the burden will be carried by the issuer internally. We estimate that compliance with Form 1–Z will result in a burden of 235.5 hours (157 issuers filing Form 1–Z × 1.50 hours/issuer) in the aggregate.

6. Form 8–A: Short Form Registration Under the Exchange Act

Under the final rules, Regulation A issuers in Tier 2 offerings that elect to list securities offered pursuant to a qualified offering statement on a national securities exchange or that seek to register the class of securities offered pursuant to a qualified offering statement under the Exchange Act may do so by filing a Form 8–A (short form) registration statement with the Commission.[1075] In such circumstances, an issuer will be required to comply with the form requirements of Form 8–A, which will generally allow issuers to incorporate by reference in the form information provided in the related Form 1–A. While we do not know the exact number of issuers conducting Tier 2 offerings that will seek to register a class of securities under the Exchange Act at or near the time of qualification of an offering statement, for purpose of this PRA analysis, we estimate 2 percent of all issuers filing a Form 1–A (or 5 issuers, 250 issuers × .02) will elect to register a class of securities under the Exchange Act and file a Form 8–A.

The final rules do not alter the burden hour per response of Form 8–A, but rather amend the existing Form 8–A to permit issuers in Tier 2 offerings to rely on the form. Therefore, we estimate that compliance with the Form 8–A will not change as a result of the final rules, a burden of 3 hours per response.[1076] We estimate that compliance with Form 8–A by issuers conducting a Tier 2 offering will result in a burden of 15 hours (5 issuers filing Form 8–A × 3 hours/issuer) in aggregate each year. We estimate that 100% of the burden will be carried by the issuer internally.

7. Form ID Filings

Under the final rules, an issuer will be required to file specified disclosures with the Commission on EDGAR.[1077] We anticipate that many issuers relying on Regulation A for the first time will not have previously filed an electronic submission with the Commission and so will need to file a Form ID. Form ID is the application form for access codes to permit filing on EDGAR. The final rules will not change the form itself, but we anticipate that the number of Form ID filings will increase due to an increase in issuers relying on Regulation A. For purposes of this PRA analysis, we estimate that 75 percent of the issuers who seek to offer and sell securities in reliance on amended Regulation A will not have previously filed an electronic submission with the Commission and will, therefore, be required to file a Form ID. As noted above, we estimate that approximately 250 issuers per year will seek to offer and sell securities in reliance on Regulation A, which corresponds to approximately 188 additional Form ID filings. We estimate that 100% of the burden will be carried by the issuer internally. As a result, we estimate the additional annual burden will be approximately 28.20 hours (188 filings × 0.15 hours/filing).[1078]

8. Form F–X

Under the final rules, Canadian issuers are required to file a Form F–X, which furnishes to the Commission a written irrevocable consent and power of attorney at the time of filing the offering statement required by Rule 252. It is used to appoint an agent for service of process by Canadian issuers eligible to use Regulation A, issuers registering securities on Forms F–8 or F–10 under the Securities Act or filing periodic reports on Form 40–F under the Exchange Act, as well as in certain other circumstances.

The final rules will not change Form F–X itself, but will amend the rules to allow for the form to be filed electronically for offerings under Regulation A. Canadian companies are the only type of issuer that will be required to use this form under the final rules and we estimate that 100% of the burden will be carried by the issuer internally. We estimate that approximately 2 percent of issuers utilizing amended Regulation A will be Canadian companies (or 5 responses, 250 issuers × 0.02) resulting in an annual burden of approximately 10 hours (2 hours per response × 5 responses).[1079]

D. Collections of Information Are Mandatory

The collections of information required under Rules 251 through 263 will be mandatory for all issuers seeking to rely on the Regulation A exemption. Responses on Form 1–A, Form 1–K, Form 1–SA, Form 1–U and Form 1–Z will not be kept confidential, although an issuer may request confidential treatment for non-publicly submitted offering materials, or any portion thereof, for which it believes an exemption from the FOIA exists.[1080] It is anticipated that most material not subject to a confidential treatment request will be made public when the offering is qualified. A Form 1–A that is non-publicly submitted by an issuer and later abandoned before being publicly filed with the Commission and responses on Form ID will, however, remain non-public, absent a request for

[1072] *See* Instruction to Form 1–Z and related discussion in Section II.E.4.b. above.

[1073] *See* discussion in Section II.E.2. above.

[1074] We currently estimate the burden per response for preparing a Form 15 to be 1.50 hours. *See* Form 15 at 1.

[1075] *See* discussion in Section II.E.3. above.

[1076] 17 CFR 249.208a.

[1077] *See* Rules 252 and 257.

[1078] We currently estimate the burden associated with Form ID is 0.15 hours per response. *See* Form ID at 1.

[1079] In this regard, we note that no Canadian issuers filed a Form 1–A in 2013.

[1080] *See* Commission Rule 83, 17 CFR 200.83, and Securities Act Rule 406, 17 CFR 230.406.

such information under the Freedom of Information Act.[1081]

V. Final Regulatory Flexibility Act Analysis

This Final Regulatory Flexibility Analysis has been prepared in accordance with the Regulatory Flexibility Act, 5 U.S.C. 603. It relates to the following:

- Amendments to Rule 157(a), Rules 251 through 263 of Regulation A, Rule 505 of Regulation D, Form 1–A, Form 8–A, Rule 30–1 of the Commission's organizational rules, Rule 4a–1 under the Trust Indenture Act, Rule 12g5–1 and Rule 15c2–11 under the Exchange Act, and Item 101 of Regulation S–T;
- new Forms 1–K, 1–SA, 1–U, and 1–Z; and
- the rescission of Form 2–A.

An Initial Regulatory Flexibility Analysis (IRFA) was prepared in accordance with the Regulatory Flexibility Act and included in the Proposing Release.

A. Need for the Rules

The rule amendments, new forms, and rescission of Form 2–A are designed to implement the requirements of Section 3(b)(2) of the Securities Act and to make certain conforming changes based on our amendments to Regulation A. Section 3(b)(2) directs the Commission to adopt rules adding a class of securities exempt from the registration requirements of the Securities Act for offerings of up to $50 million of securities within a 12-month period, subject to various additional terms and conditions set forth in Section 3(b)(2) or as provided for by the Commission as part of the rulemaking process.

Our primary objective is to implement Section 401 of the JOBS Act by expanding and updating Regulation A in a manner that makes public offerings of up to $50 million less costly and more flexible while providing a framework for regulatory oversight to protect investors. In so doing, we have crafted a revision of Regulation A that both promotes small company capital formation and provides for meaningful investor protection. We believe that issuers, particularly small businesses, benefit from having a wide range of capital-raising strategies available to them, and that an expanded and updated Regulation A could serve as a valuable option that augments the exemptions from registration more frequently relied upon, thereby facilitating capital formation for small businesses.

B. Significant Issues Raised by Public Comments

In the Proposing Release, we requested comment on every aspect of the IRFA, including the number of small entities that would be affected by the proposed amendments, the existence or nature of the potential impact of the proposals on small entities discussed in the analysis, and how to quantify the impact of the proposed rules. We did not receive any comments specifically addressing the IRFA. We did, however, receive comments from members of the public on matters that could potentially impact small entities. These comments are discussed at length by topic in the corresponding subsections of Section II. above.

While the proposed rules contemplated that small entities would be able to elect to proceed under the requirements of either Tier 1 or Tier 2, as discussed more fully below, an entity considered a small business under our rules would only be required to file ongoing reports under Regulation A if it elected to conduct a Tier 2 offering.[1082] The following discussion therefore focuses on the suggestions of commenters, as they relate to the proposed and final requirements for Tier 1 offerings, which is the tier most likely to be relied upon by small entities.[1083]

Many commenters recommended making changes to proposed rules that, in their view, would make Regulation A a more viable capital raising option for smaller issuers.[1084] Some commenters recommended improving the utility of Regulation A for smaller issuers by preempting state regulation of Tier 1 offerings.[1085] Others, however, opposed preemption for all Regulation A offerings.[1086] Some commenters recommended that we adopt a third tier, either expressly or through fleixble applicability of the proposed tier requirements.[1087] Some commenters suggested that raising the offering limit of Tier 1 from $5 million to $10 million or more would make Tier 1 more useful,[1088] while others recommended including various forms of ongoing disclosure at a level lower than what was proposed to be required for Tier 2.[1089] One commenter suggested reducing the Tier 1 narrative disclosure obligations, particularly for offerings of $2 million or less, so that such requirements would be more appropriately tailored for smaller issuers.[1090] Several commenters made recommendations with respect to the financial statement and auditing requirements in Form 1–A, as they relate to the requirements for Tier 1.[1091]

The final rules for Regulation A take into account some of the suggestions by commenters on ways to make Tier 1 more useful for small entities. For example, the final rules raise the offering limit of Tier 1 to $20 million. Also, with respect to the offering circular narrative disclosure requirements,[1092] we have adopted certain additional scaled disclosure requirements for Tier 1 that are intended to lessen the compliance obligations for smaller issuers. We are further providing issuers under both tiers with the accommodation provided to emerging growth companies in Securities Act Section 7(a) to use the extended transition periods applicable to private companies for complying with new or revised accounting standards under U.S. GAAP. Additionally, we have provided Tier 1 issuers with additional flexibility with respect to auditor independence standards.

As noted in Section II.H.3. above, however, we do not agree with the position of some commenters that preemption of state securities laws registration and qualification requirements is necessary or appropriate for Tier 1 offerings.[1093] We note that some commenters who suggested that preemption of state securities laws may improve the attractiveness of Tier 1 offerings did so on the condition that other aspects of the tier should change accordingly, namely requiring Tier 1

[1081] 5 U.S.C. 552. The Commission's regulations that implement the Freedom of Information Act are at 17 CFR 200.80 *et seq.*

[1082] The distinction between a Tier 1 offering and Tier 2 offering is discussed in Section II. above.

[1083] For a more comprehensive discussion of commenter suggestions as to the proposed rules for both Tier 1 and Tier 2 that could potentially impact small entities, *see* Section II. above.

[1084] Andreessen/Cowen Letter; BDO Letter; Bernard Letter; Campbell Letter; CAQ Letter; Public Startup Co. Letter 1; Deloitte Letter; E&Y Letter; Guzik Letter 1; Heritage Letter; ICBA Letter; KPMG Letter; McGladrey Letter; Milken Institute Letter; Ladd Letter 2; SVB Financial Letter; Verrill Dana Letter 1; WR Hambrecht + Co Letter.

[1085] Andreessen/Cowen Letter; Bernard Letter; Campbell Letter; Public Startup Co. Letter 1; Guzik Letter 1; Heritage Letter; Milken Institute Letter; Ladd Letter 2; SVB Financial Letter.

[1086] *See* fn. 772 above.

[1087] *See, e.g.,* Public Startup Co. Letter 1.

[1088] Guzik Letter 1; ICBA Letter.

[1089] Guzik Letter 1 (suggesting that Tier 1 ongoing disclosure requirements could parallel Tier 2's requirements, but without the requirement for semiannual reports); Ladd Letter 2; Public Startup Co. Letters 1 and 5; SVB Financial Letter.

[1090] Campbell Letter.

[1091] BDO Letter; CAQ Letter; Deloitte Letter; E&Y Letter; KPMG Letter; McGladrey Letter.

[1092] *See* Section II.C.3.b(1). above.

[1093] *See* Section II.H.3. above.

issuers to provide audited financial statements in the offering statement and possibly on an ongoing basis. For the reasons discussed in Section II.D.3.b(2)(c). above, we have not adopted such changes in Tier 1.

Additionally, as noted in Section II.I. above, we do not believe that the creation of a third tier, as suggested by some commenters, would meaningfully alter a smaller entity's options for capital formation under Regulation A. While a third tier may provide issuers with some additional flexibility for capital formation under Regulation A, this additional flexibility would have potential costs. For example, a third tier may unnecessarily complicate compliance with Regulation A for smaller entities, and could potentially confuse investors as to the type of Regulation A offering an issuer was undertaking and the type of information such investor could expect to receive as a result, thereby lessening the viability of the exemption as a whole. For this reason, we are not adopting a third or intermediate tier in Regulation A.

In the light of the changes discussed above, we believe that the final rules we are adopting today provide smaller issuers with an appropriately tailored regulatory regime that takes into account the needs of small entities to have a viable capital formation option in Regulation A, while maintaining appropriate investor protections.

C. Small Entities Subject to the Rules

For purposes of the Regulatory Flexibility Act, under our rules, an issuer (other than an investment company) is a ''small business'' or ''small organization'' if it has total assets of $5 million or less as of the end of its most recent fiscal year and is engaged or proposing to engage in an offering of securities which does not exceed $5 million.[1094]

While Regulation A is available for offerings of up to $50 million in securities in a 12-month period, only offerings up to $5 million in securities in a 12-month period will constitute offerings by small entities under the definition set forth above. It is difficult to predict the number of small entities that will use Regulation A due to the many variables included in the amendments. Nevertheless, we believe that the final rules for Regulation A will increase the overall number of Regulation A offerings of $5 million or less due to the ability to non-publicly submit draft offering statements for review by the Commission's staff, the expanded use of solicitation of interest materials, the ability to electronically file and transmit offering statements and offering circulars, the potential for preemption of state regulatory review if the issuer elects to conduct a Tier 2 offering, and other significant changes summarized in Section II. above.

Regulation A is currently limited to offerings with an aggregate offering price and aggregate sales of $5 million or less.[1095] From 2009 through 2014, 158 issuers filed offering statements and 36 offering statements were qualified by the Commission, or an average of approximately six qualified offering statements per year. Of the 36 offering statements that were qualified, 28 included financial statements indicating that the issuer had total assets of $5 million or less (as of the most recent balance sheet included in such issuer's offering statement at the time of qualification), or an average of approximately five qualified offering statements per year in which the issuer indicated it had total assets of $5 million or less. Based on these data, and for the reasons discussed above, we believe that at least five small businesses will conduct offerings under Regulation A per year.

D. Reporting, Recordkeeping, and Other Compliance Requirements

As discussed above in Section II., the final rules include reporting, recordkeeping and other compliance requirements. In particular, the final rules impose certain reporting requirements on issuers offering and selling securities in a transaction relying on the exemption provided by Section 3(b) and Regulation A. The final rules require that issuers relying on the exemption file with the Commission certain information specified in Form 1–A about the issuer and the offering, including the issuer's contact information; use of proceeds from the offering; price or method for calculating the price of the securities being offered; business and business plan; property; financial condition and results of operations; directors, officers, significant employees and certain beneficial owners; material agreements and contracts; and past securities sales.[1096] Such issuers are also required to provide information on the material factors that make an investment in the issuer speculative or risky; dilution; the plan of distribution for the offering; executive and director compensation; conflicts of interest and related party transactions; and financial statements. Similar to existing Regulation A, for Tier 1 offerings, Form 1–A does not require the financial statements to be audited unless the issuer has already had them audited for another purpose.

As discussed above in Section II.E.1.c., issuers conducting Tier 2 offerings are also required to file annual reports on new Form 1–K, semiannual updates on new Form 1–SA, current event reporting on new Form 1–U, and to provide notice to the Commission of the termination of their ongoing reporting obligations on new Form 1–Z.

An issuer subject to the Tier 2 periodic and current event reporting described above is required to provide information annually on Form 1–K, including the issuer's business and business plan; conflicts of interest and related party transactions; executive and director compensation; financial condition and results of operations; and audited financial statements. The semiannual update on Form 1–SA consists primarily of unaudited, interim financial statements for the issuer's first two fiscal quarters and information regarding the issuer's financial condition and results of operations. The current event reporting on Form 1–U requires issuers to disclose certain major developments, including changes of control; changes in the principal executive officer and principal financial officer; fundamental changes in the nature of business; material transactions or corporate events; unregistered sales of five percent or more of outstanding equity securities; changes in the issuer's certifying accountant; and non-reliance on previous financial statements.

Form 1–Z is required for issuers in both Tier 1 and Tier 2 offerings to report summary information about a completed or terminated Regulation A offering. Issuers conducting Tier 2 offerings also will be subject to the additional provision in Form 1–Z that relates to the voluntary termination of an issuer's continuous reporting obligations under Tier 2; however, we expect its use by small entities will be limited.

Although we estimated in the Proposing Release that approximately 188 issuers would enter the proposed Tier 2 ongoing reporting regime every year, we believe that very few small

[1094] Securities Act Rule 157 [17 CFR 230.157]. We note that currently this rule refers to ''the dollar limitation prescribed by Section 3(b) of the Securities Act.'' The JOBS Act amended Section 3(b) of the Securities Act. The former Section 3(b) is now Section 3(b)(1), and a new Section 3(b)(2) was added. To retain the meaning of Rule 157, we are adopting a technical correction to replace the reference to ''Section 3(b)'' with a reference to ''Section 3(b)(1).''

[1095] As explained in Section II.B.3. above, aggregate sales under Regulation A include prior sales generated from Regulation A offerings that occurred in the 12 months preceding the current offering.

[1096] *See* discussion in Section II.C.3.b. above.

businesses will do so. A small business under our rules will only be required to file ongoing reports under Regulation A if it elects to conduct a Tier 2 offering.

E. Agency Action To Minimize Effect on Small Entities

The Regulatory Flexibility Act directs us to consider significant alternatives that would accomplish the stated objective of our proposals, while minimizing any significant adverse impact on small entities. In connection with the final amendments and rules, we considered the following alternatives: (1) The establishment of differing compliance or reporting requirements or timetables that take into account the resources available to small entities; (2) the clarification, consolidation or simplification of compliance and reporting requirements under the rule for small entities; (3) the use of performance rather than design standards; and (4) an exemption from coverage of the rules, or any parts of the rules, for small entities.

We considered whether it is necessary or appropriate to establish different compliance or reporting requirements, timetables, or to clarify, consolidate, or simplify compliance and reporting requirements under the final rules for small entities. We have made several changes from the proposal that may reduce compliance burdens on small entities. For example, in response to public comment, the final rules provide for the further scaling of disclosure items pertaining to executive compensation and related party transactions for entities offering securities pursuant to Tier 1, which are likely to be smaller entities.

With respect to using performance rather than design standards, we used performance standards to the extent appropriate under the statute. For example, issuers have the flexibility to customize the presentation of certain disclosures in their offering statements.[1097]

We also considered whether there should be an exemption from coverage of the rules, or any parts of the rules, for small entities. As discussed above, we are adopting different compliance reporting requirements for issuers that qualify $20 million or less in securities annually under Tier 1. Those issuers, which are more likely to be small entities, are not subject to ongoing reporting requirements and the requirement to provide audited financial statements, although such entities retain the flexibility to comply with more rigorous initial and ongoing compliance obligations if they so choose. While audited financial statements are not a Tier 1 requirement, in comparison to the proposed rules, the final rules provide certain additional flexibility as to the independence standards required to be followed by auditors of financial statements for issuers of less than $20 million that conduct Tier 1 offerings—to the extent an issuer elects to provide audited financial statements—by allowing such auditors to comply with the independence standards of either the AICPA or Article 2 of Regulation S–X. We believe that further distinctions in compliance requirements for Form 1–A users beyond the different sets of requirements for Tier 1 and Tier 2 issuers may lead to investor confusion or reduced investor confidence in Regulation A offerings, especially considering that the disclosure requirements are already less than what is required by Form S–1 for registered offerings. Further, we anticipate that the burden for preparing a Form 1–A should be less for companies at an earlier stage of development and with less extensive operations that are likely to be small entities.[1098] For these reasons, we believe that small entities should be covered by the final rules to the extent specified above.

VI. Statutory Basis and Text of Amendments

The amendments and forms contained in this document are being adopted under the authority set forth in Sections 3(b), 19 and 28 of the Securities Act of 1933, as amended, Sections 12, 15, 23(a) and 36 of the Securities Exchange Act of 1934, as amended, and Section 304 of the Trust Indenture Act of 1939, as amended.

List of Subjects

17 CFR Part 200

Administrative practice and procedure, Authority delegations (Government agencies), Organization and functions (Government agencies).

17 CFR Parts 230, 232, 239, 240, 249, and 260

Reporting and recordkeeping requirements, Securities.

In accordance with the foregoing, title 17, chapter II of the Code of Federal Regulations is amended as follows:

PART 200—ORGANIZATION; CONDUCT AND ETHICS; AND INFORMATION AND REQUESTS

■ 1. The authority citation for part 200 is revised to read in part as follows:

Authority: 15 U.S.C. 77c, 77o, 77s, 77z–3, 77sss, 78d, 78d–1, 78d–2, 78o–4, 78w, 78*ll*(d), 78mm, 80a–37, 80b–11, 7202, and 7211 *et seq.,* unless otherwise noted.

* * * * *

■ 2. Section 200.30–1 is amended by:

■ a. Revise paragraphs (b)(2) and (3); and

■ b. Add paragraph (b)(4).

The revisions and addition read as follows:

§ 200.30–1 Delegation of authority to Director of Division of Corporation Finance.

* * * * *

(b) * * *

(2) To determine the date and time of qualification for offering statements and amendments to offering statements pursuant to Rule 252(e) (§ 230.252(e) of this chapter);

(3) To consent to the withdrawal of an offering statement or to declare an offering statement abandoned pursuant to Rule 259 (§ 230.259 of this chapter); and

(4) To deny a Form 1–Z filing pursuant to Rule 257 (§ 230.257 of this chapter).

* * * * *

PART 230—GENERAL RULES AND REGULATIONS, SECURITIES ACT OF 1933

■ 3. The authority citation for part 230 is revised to read in part as follows:

Authority: 15 U.S.C. 77b, 77b note, 77c, 77d, 77f, 77g, 77h, 77j, 77r, 77s, 77z–3, 77sss, 78c, 78d, 78j, 78*l,* 78m, 78n, 78o, 78o–7 note, 78t, 78w, 78*ll*(d), 78mm, 80a–8, 80a–24, 80a–28, 80a–29, 80a–30, and 80a–37, and Pub. L. 112–106, sec. 201(a), sec. 401, 126 Stat. 313 (2012), unless otherwise noted.

* * * * *

■ 4. In § 230.157, paragraph (a) is revised to read as follows:

§ 230.157 Small entities under the Securities Act for purposes of the Regulatory Flexibility Act.

* * * * *

(a) When used with reference to an issuer, other than an investment company, for purposes of the Securities Act of 1933, mean an issuer whose total assets on the last day of its most recent fiscal year were $5 million or less and that is engaged or proposing to engage in small business financing. An issuer is considered to be engaged or proposing to engage in small business financing under this section if it is conducting or

[1097] *See* Section II.C.3.b. above.

[1098] *See* discussion in Section IV.A.1. above.

proposes to conduct an offering of securities which does not exceed the dollar limitation prescribed by section 3(b)(1) of the Securities Act.

* * * * *

■ 5. Sections 230.251 through 230.263 are revised to read as follows:

Sec.
230.251 Scope of exemption.
230.252 Offering statement.
230.253 Offering circular.
230.254 Preliminary offering circular.
230.255 Solicitations of interest and other communications.
230.256 Definition of ''qualified purchaser''.
230.257 Periodic and current reporting; exit report.
230.258 Suspension of the exemption.
230.259 Withdrawal or abandonment of offering statements.
230.260 Insignificant deviations from a term, condition or requirement of Regulation A.
230.261 Definitions.
230.262 Disqualification provisions.
230.263 Consent to service of process.

§ 230.251 Scope of exemption.

(a) *Tier 1 and Tier 2.* A public offer or sale of eligible securities, as defined in Rule 261 (§ 230.261), pursuant to Regulation A shall be exempt under section 3(b) from the registration requirements of the Securities Act of 1933 (the ''Securities Act'') (15 U.S.C. 77a *et seq.*).

(1) *Tier 1.* Offerings pursuant to Regulation A in which the sum of all cash and other consideration to be received for the securities being offered (''aggregate offering price'') plus the gross proceeds for all securities sold pursuant to other offering statements within the 12 months before the start of and during the current offering of securities (''aggregate sales'') does not exceed $20,000,000, including not more than $6,000,000 offered by all selling securityholders that are affiliates of the issuer (''Tier 1 offerings'').

(2) *Tier 2.* Offerings pursuant to Regulation A in which the sum of the aggregate offering price and aggregate sales does not exceed $50,000,000, including not more than $15,000,000 offered by all selling securityholders that are affiliates of the issuer (''Tier 2 offerings'').

(3) *Additional limitation on secondary sales in first year.* The portion of the aggregate offering price attributable to the securities of selling securityholders shall not exceed 30% of the aggregate offering price of a particular offering in:

(i) The issuer's first offering pursuant to Regulation A; or

(ii) Any subsequent Regulation A offering that is qualified within one year of the qualification date of the issuer's first offering.

Note to paragraph (a). Where a mixture of cash and non-cash consideration is to be received, the aggregate offering price must be based on the price at which the securities are offered for cash. Any portion of the aggregate offering price or aggregate sales attributable to cash received in a foreign currency must be translated into United States currency at a currency exchange rate in effect on, or at a reasonable time before, the date of the sale of the securities. If securities are not offered for cash, the aggregate offering price or aggregate sales must be based on the value of the consideration as established by bona fide sales of that consideration made within a reasonable time, or, in the absence of sales, on the fair value as determined by an accepted standard. Valuations of non-cash consideration must be reasonable at the time made. If convertible securities or warrants are being offered and such securities are convertible, exercisable, or exchangeable within one year of the offering statement's qualification or at the discretion of the issuer, the underlying securities must also be qualified and the aggregate offering price must include the actual or maximum estimated conversion, exercise, or exchange price of such securities.

(b) *Issuer.* The issuer of the securities:

(1) Is an entity organized under the laws of the United States or Canada, or any State, Province, Territory or possession thereof, or the District of Columbia, with its principal place of business in the United States or Canada;

(2) Is not subject to section 13 or 15(d) of the Securities Exchange Act of 1934 (the ''Exchange Act'') (15 U.S.C. 78a *et seq.*) immediately before the offering;

(3) Is not a development stage company that either has no specific business plan or purpose, or has indicated that its business plan is to merge with or acquire an unidentified company or companies;

(4) Is not an investment company registered or required to be registered under the Investment Company Act of 1940 (15 U.S.C. 80a–1 *et seq.*) or a business development company as defined in section 2(a)(48) of the Investment Company Act of 1940 (15 U.S.C. 80a–2(a)(48));

(5) Is not issuing fractional undivided interests in oil or gas rights, or a similar interest in other mineral rights;

(6) Is not, and has not been, subject to any order of the Commission entered pursuant to Section 12(j) of the Exchange Act (15 U.S.C. 78*l*(j)) within five years before the filing of the offering statement;

(7) Has filed with the Commission all reports required to be filed, if any, pursuant to Rule 257 (§ 230.257) during the two years before the filing of the offering statement (or for such shorter period that the issuer was required to file such reports); and

(8) Is not disqualified under Rule 262 (§ 230.262).

(c) *Integration with other offerings.* Offers or sales made in reliance on this Regulation A will not be integrated with:

(1) Prior offers or sales of securities; or

(2) Subsequent offers or sales of securities that are:

(i) Registered under the Securities Act, except as provided in Rule 255(e) (§ 230.255(e));

(ii) Exempt from registration under Rule 701 (§ 230.701);

(iii) Made pursuant to an employee benefit plan;

(iv) Exempt from registration under Regulation S (§§ 230.901 through 203.905);

(v) Made more than six months after the completion of the Regulation A offering; or

(vi) Exempt from registration under Section 4(a)(6) of the Securities Act (15 U.S.C. 77d(a)(6)).

Note to paragraph (c). If these safe harbors do not apply, whether subsequent offers and sales of securities will be integrated with the Regulation A offering will depend on the particular facts and circumstances.

(d) *Offering conditions*—(1) *Offers.* (i) Except as allowed by Rule 255 (§ 230.255), no offer of securities may be made unless an offering statement has been filed with the Commission.

(ii) After the offering statement has been filed, but before it is qualified:

(A) Oral offers may be made;

(B) Written offers pursuant to Rule 254 (§ 230.254) may be made; and

(C) Solicitations of interest and other communications pursuant to Rule 255 (§ 230.255) may be made.

(iii) Offers may be made after the offering statement has been qualified, but any written offers must be accompanied with or preceded by the most recent offering circular filed with the Commission for such offering.

(2) *Sales.* (i) No sale of securities may be made:

(A) Until the offering statement has been qualified;

(B) By issuers that are not currently required to file reports pursuant to Rule 257(b) (§ 230.257(b)), until a Preliminary Offering Circular is delivered at least 48 hours before the sale to any person that before qualification of the offering statement had indicated an interest in purchasing securities in the offering, including those persons that responded to an issuer's solicitation of interest materials; and

(C) In a Tier 2 offering of securities that are not listed on a registered

national securities exchange upon qualification, unless the purchaser is either an accredited investor (as defined in Rule 501 (§ 230.501)) or the aggregate purchase price to be paid by the purchaser for the securities (including the actual or maximum estimated conversion, exercise, or exchange price for any underlying securities that have been qualified) is no more than ten percent (10%) of the greater of such purchaser's:

(*1*) Annual income or net worth if a natural person (with annual income and net worth for such natural person purchasers determined as provided in Rule 501 (§ 230.501)); or

(*2*) Revenue or net assets for such purchaser's most recently completed fiscal year end if a non-natural person.

Note to paragraph (d)(2)(i)(C). When securities underlying warrants or convertible securities are being qualified pursuant to Tier 2 of Regulation A one year or more after the qualification of an offering for which investment limitations previously applied, purchasers of the underlying securities for which investment limitations would apply at that later date may determine compliance with the ten percent (10%) investment limitation using the conversion, exercise, or exchange price to acquire the underlying securities at that later time without aggregating such price with the price of the overlying warrants or convertible securities.

(D) The issuer may rely on a representation of the purchaser when determining compliance with the ten percent (10%) investment limitation in this paragraph (d)(2)(i)(C), provided that the issuer does not know at the time of sale that any such representation is untrue.

(ii) In a transaction that represents a sale by the issuer or an underwriter, or a sale by a dealer within 90 calendar days after qualification of the offering statement, each underwriter or dealer selling in such transaction must deliver to each purchaser from it, not later than two business days following the completion of such sale, a copy of the Final Offering Circular, subject to the following provisions:

(A) If the sale was by the issuer and was not effected by or through an underwriter or dealer, the issuer is responsible for delivering the Final Offering Circular as if the issuer were an underwriter;

(B) For continuous or delayed offerings pursuant to paragraph (d)(3) of this section, the 90 calendar day period for dealers shall commence on the day of the first bona fide offering of securities under such offering statement;

(C) If the security is listed on a registered national securities exchange, no offering circular need be delivered by a dealer more than 25 calendar days after the later of the qualification date of the offering statement or the first date on which the security was bona fide offered to the public;

(D) No offering circular need be delivered by a dealer if the issuer is subject, immediately prior to the time of the filing of the offering statement, to the reporting requirements of Rule 257(b) (§ 230.257(b)); and

(E) The Final Offering Circular delivery requirements set forth in paragraph (d)(2)(ii) of this section may be satisfied by delivering a notice to the effect that the sale was made pursuant to a qualified offering statement that includes the uniform resource locator (''URL''), which, in the case of an electronic-only offering, must be an active hyperlink, where the Final Offering Circular, or the offering statement of which such Final Offering Circular is part, may be obtained on the Commission's Electronic Data Gathering, Analysis and Retrieval System (''EDGAR'') and contact information sufficient to notify a purchaser where a request for a Final Offering Circular can be sent and received in response.

(3) *Continuous or delayed offerings.* (i) Continuous or delayed offerings may be made under this Regulation A, so long as the offering statement pertains only to:

(A) Securities that are to be offered or sold solely by or on behalf of a person or persons other than the issuer, a subsidiary of the issuer, or a person of which the issuer is a subsidiary;

(B) Securities that are to be offered and sold pursuant to a dividend or interest reinvestment plan or an employee benefit plan of the issuer;

(C) Securities that are to be issued upon the exercise of outstanding options, warrants, or rights;

(D) Securities that are to be issued upon conversion of other outstanding securities;

(E) Securities that are pledged as collateral; or

(F) Securities the offering of which will be commenced within two calendar days after the qualification date, will be made on a continuous basis, may continue for a period in excess of 30 calendar days from the date of initial qualification, and will be offered in an amount that, at the time the offering statement is qualified, is reasonably expected to be offered and sold within two years from the initial qualification date. These securities may be offered and sold only if not more than three years have elapsed since the initial qualification date of the offering statement under which they are being offered and sold; provided, however, that if a new offering statement has been filed pursuant to this paragraph (d)(3)(i)(F), securities covered by the prior offering statement may continue to be offered and sold until the earlier of the qualification date of the new offering statement or 180 calendar days after the third anniversary of the initial qualification date of the prior offering statement. Before the end of such three-year period, an issuer may file a new offering statement covering the securities. The new offering statement must include all the information that would be required at that time in an offering statement relating to all offerings that it covers. Before the qualification date of the new offering statement, the issuer may include as part of such new offering statement any unsold securities covered by the earlier offering statement by identifying on the cover page of the new offering circular, or the latest amendment, the amount of such unsold securities being included. The offering of securities on the earlier offering statement will be deemed terminated as of the date of qualification of the new offering statement. Securities may be sold pursuant to this paragraph (d)(3)(i)(F) only if the issuer is current in its annual and semiannual filings pursuant to Rule 257(b) (§ 230.257(b)), at the time of such sale.

(ii) At the market offerings, by or on behalf of the issuer or otherwise, are not permitted under this Regulation A. As used in this paragraph (d)(3)(ii), the term *at the market offering* means an offering of equity securities into an existing trading market for outstanding shares of the same class at other than a fixed price.

(e) *Confidential treatment.* A request for confidential treatment may be made under Rule 406 (§ 230.406) for information required to be filed, and Rule 83 (§ 200.83) for information not required to be filed.

(f) *Electronic filing.* Documents filed or otherwise provided to the Commission pursuant to this Regulation A must be submitted in electronic format by means of EDGAR in accordance with the EDGAR rules set forth in Regulation S–T (17 CFR part 232).

§ 230.252 Offering statement.

(a) *Documents to be included.* The offering statement consists of the contents required by Form 1–A (§ 239.90 of this chapter) and any other material information necessary to make the required statements, in light of the circumstances under which they are made, not misleading.

(b) *Paper, printing, language and pagination.* Except as otherwise specified in this rule, the requirements for offering statements are the same as those specified in Rule 403 (§ 230.403) for registration statements under the Act. No fee is payable to the Commission upon either the submission or filing of an offering statement on Form 1–A, or any amendment to an offering statement.

(c) *Signatures.* The issuer, its principal executive officer, principal financial officer, principal accounting officer, and a majority of the members of its board of directors or other governing body, must sign the offering statement in the manner prescribed by Form 1–A. If a signature is by a person on behalf of any other person, evidence of authority to sign must be filed, except where an executive officer signs for the issuer.

(d) *Non-public submission.* An issuer whose securities have not been previously sold pursuant to a qualified offering statement under this Regulation A or an effective registration statement under the Securities Act may submit a draft offering statement to the Commission for non-public review by the staff of the Commission before public filing, provided that the offering statement shall not be qualified less than 21 calendar days after the public filing with the Commission of:

(1) The initial non-public submission;

(2) All non-public amendments; and

(3) All non-public correspondence submitted by or on behalf of the issuer to the Commission staff regarding such submissions (subject to any separately approved confidential treatment request under Rule 251(e) (§ 230.251(e)).

(e) *Qualification.* An offering statement and any amendment thereto can be qualified only at such date and time as the Commission may determine.

(f) *Amendments.* (1)(i) Amendments to an offering statement must be signed and filed with the Commission in the same manner as the initial filing. Amendments to an offering statement must be filed under cover of Form 1–A and must be numbered consecutively in the order in which filed.

(ii) Every amendment that includes amended audited financial statements must include the consent of the certifying accountant to the use of such accountant's certification in connection with the amended financial statements in the offering statement or offering circular and to being named as having audited such financial statements.

(iii) Amendments solely relating to Part III of Form 1–A must comply with the requirements of paragraph (f)(1)(i) of this section, except that such amendments may be limited to Part I of Form 1–A, an explanatory note, and all of the information required by Part III of Form 1–A.

(2) Post-qualification amendments must be filed in the following circumstances for ongoing offerings:

(i) At least every 12 months after the qualification date to include the financial statements that would be required by Form 1–A as of such date; or

(ii) To reflect any facts or events arising after the qualification date of the offering statement (or the most recent post-qualification amendment thereof) which, individually or in the aggregate, represent a fundamental change in the information set forth in the offering statement.

§ 230.253 Offering circular.

(a) *Contents.* An offering circular must include the information required by Form 1–A for offering circulars.

(b) *Information that may be omitted.* Notwithstanding paragraph (a) of this section, a qualified offering circular may omit information with respect to the public offering price, underwriting syndicate (including any material relationships between the issuer or selling securityholders and the unnamed underwriters, brokers or dealers), underwriting discounts or commissions, discounts or commissions to dealers, amount of proceeds, conversion rates, call prices and other items dependent upon the offering price, delivery dates, and terms of the securities dependent upon the offering date; provided, that the following conditions are met:

(1) The securities to be qualified are offered for cash.

(2) The outside front cover page of the offering circular includes a bona fide estimate of the range of the maximum offering price and the maximum number of shares or other units of securities to be offered or a bona fide estimate of the principal amount of debt securities offered, subject to the following conditions:

(i) The range must not exceed $2 for offerings where the upper end of the range is $10 or less or 20% if the upper end of the price range is over $10; and

(ii) The upper end of the range must be used in determining the aggregate offering price under Rule 251(a) (§ 230.251(a)).

(3) The offering statement does not relate to securities to be offered by competitive bidding.

(4) The volume of securities (the number of equity securities or aggregate principal amount of debt securities) to be offered may not be omitted in reliance on this paragraph (b).

Note to paragraph (b). A decrease in the volume of securities offered or a change in the bona fide estimate of the offering price range from that indicated in the offering circular filed as part of a qualified offering statement may be disclosed in the offering circular filed with the Commission pursuant to Rule 253(g) (§ 230.253(g)), so long as the decrease in the volume of securities offered or change in the price range would not materially change the disclosure contained in the offering statement at qualification. Notwithstanding the foregoing, any decrease in the volume of securities offered and any deviation from the low or high end of the price range may be reflected in the offering circular supplement filed with the Commission pursuant to Rule 253(g)(1) or (3) (§ 230.253(g)(1) or (3)) if, in the aggregate, the decrease in volume and/or change in price represent no more than a 20% change from the maximum aggregate offering price calculable using the information in the qualified offering statement. In no circumstances may this paragraph be used to offer securities where the maximum aggregate offering price would result in the offering exceeding the limit set forth in Rule 251(a) (§ 230.251(a)) or if the change would result in a Tier 1 offering becoming a Tier 2 offering. An offering circular supplement may not be used to increase the volume of securities being offered. Additional securities may only be offered pursuant to a new offering statement or post-qualification amendment qualified by the Commission.

(c) *Filing of omitted information.* The information omitted from the offering circular in reliance upon paragraph (b) of this section must be contained in an offering circular filed with the Commission pursuant to paragraph (g) of this section; except that if such offering circular is not so filed by the later of 15 business days after the qualification date of the offering statement or 15 business days after the qualification of a post-qualification amendment thereto that contains an offering circular, the information omitted in reliance upon paragraph (b) of this section must be contained in a qualified post-qualification amendment to the offering statement.

(d) *Presentation of information.* (1) Information in the offering circular must be presented in a clear, concise and understandable manner and in a type size that is easily readable. Repetition of information should be avoided; cross-referencing of information within the document is permitted.

(2) Where an offering circular is distributed through an electronic medium, issuers may satisfy legibility requirements applicable to printed documents by presenting all required information in a format readily communicated to investors.

(e) *Date.* An offering circular must be dated approximately as of the date it was filed with the Commission.

(f) *Cover page legend.* The cover page of every offering circular must display the following statement highlighted by prominent type or in another manner:

The United States Securities and Exchange Commission does not pass upon the merits of or give its approval to any securities offered or the terms of the offering, nor does it pass upon the accuracy or completeness of any offering circular or other solicitation materials. These securities are offered pursuant to an exemption from registration with the Commission; however, the Commission has not made an independent determination that the securities offered are exempt from registration.

(g) *Offering circular supplements.* (1) An offering circular that discloses information previously omitted from the offering circular in reliance upon Rule 253(b) (§ 230.253(b)) must be filed with the Commission no later than two business days following the earlier of the date of determination of the offering price or the date such offering circular is first used after qualification in connection with a public offering or sale.

(2) An offering circular that reflects information other than that covered in paragraph (g)(1) of this section that constitutes a substantive change from or addition to the information set forth in the last offering circular filed with the Commission must be filed with the Commission no later than five business days after the date it is first used after qualification in connection with a public offering or sale. If an offering circular filed pursuant to this paragraph (g)(2) consists of an offering circular supplement attached to an offering circular that previously had been filed or was not required to be filed pursuant to paragraph (g) of this section because it did not contain substantive changes from an offering circular that previously was filed, only the offering circular supplement need be filed under paragraph (g) of this section, provided that the cover page of the offering circular supplement identifies the date(s) of the related offering circular and any offering circular supplements thereto that together constitute the offering circular with respect to the securities currently being offered or sold.

(3) An offering circular that discloses information, facts or events covered in both paragraphs (g)(1) and (2) of this section must be filed with the Commission no later than two business days following the earlier of the date of the determination of the offering price or the date it is first used after qualification in connection with a public offering or sale.

(4) An offering circular required to be filed pursuant to paragraph (g) of this section that is not filed within the time frames specified in paragraphs (g)(1) through (3) of this section, as applicable, must be filed pursuant to this paragraph (g)(4) as soon as practicable after the discovery of such failure to file.

(5) Each offering circular filed under this section must contain in the upper right corner of the cover page the paragraphs of paragraphs (g)(1) through (4) of this section under which the filing is made, and the file number of the offering statement to which the offering circular relates.

§ 230.254 Preliminary offering circular.

After the filing of an offering statement, but before its qualification, written offers of securities may be made if they meet the following requirements:

(a) *Outside front cover page.* The outside front cover page of the material bears the caption *Preliminary Offering Circular,* the date of issuance, and the following legend, which must be highlighted by prominent type or in another manner:

An offering statement pursuant to Regulation A relating to these securities has been filed with the Securities and Exchange Commission. Information contained in this Preliminary Offering Circular is subject to completion or amendment. These securities may not be sold nor may offers to buy be accepted before the offering statement filed with the Commission is qualified. This Preliminary Offering Circular shall not constitute an offer to sell or the solicitation of an offer to buy nor may there be any sales of these securities in any state in which such offer, solicitation or sale would be unlawful before registration or qualification under the laws of any such state. We may elect to satisfy our obligation to deliver a Final Offering Circular by sending you a notice within two business days after the completion of our sale to you that contains the URL where the Final Offering Circular or the offering statement in which such Final Offering Circular was filed may be obtained.

(b) *Other contents.* The Preliminary Offering Circular contains substantially the information required to be in an offering circular by Form 1–A (§ 239.90 of this chapter), except that certain information may be omitted under Rule 253(b) (§ 230.253(b)) subject to the conditions set forth in such rule.

(c) *Filing.* The Preliminary Offering Circular is filed as a part of the offering statement.

§ 230.255 Solicitations of interest and other communications.

(a) *Solicitation of interest.* At any time before the qualification of an offering statement, including before the non-public submission or public filing of such offering statement, an issuer or any person authorized to act on behalf of an issuer may communicate orally or in writing to determine whether there is any interest in a contemplated securities offering. Such communications are deemed to be an offer of a security for sale for purposes of the antifraud provisions of the federal securities laws. No solicitation or acceptance of money or other consideration, nor of any commitment, binding or otherwise, from any person is permitted until qualification of the offering statement.

(b) *Conditions.* The communications must:

(1) State that no money or other consideration is being solicited, and if sent in response, will not be accepted;

(2) State that no offer to buy the securities can be accepted and no part of the purchase price can be received until the offering statement is qualified, and any such offer may be withdrawn or revoked, without obligation or commitment of any kind, at any time before notice of its acceptance given after the qualification date;

(3) State that a person's indication of interest involves no obligation or commitment of any kind; and

(4) After the public filing of the offering statement:

(i) State from whom a copy of the most recent version of the Preliminary Offering Circular may be obtained, including a phone number and address of such person;

(ii) Provide the URL where such Preliminary Offering Circular, or the offering statement in which such Preliminary Offering Circular was filed, may be obtained; or

(iii) Include a complete copy of the Preliminary Offering Circular.

(c) *Indications of interest.* Any written communication under this rule may include a means by which a person may indicate to the issuer that such person is interested in a potential offering. This issuer may require the name, address, telephone number, and/or email address in any response form included pursuant to this paragraph (c).

(d) *Revised solicitations of interest.* If solicitation of interest materials are used after the public filing of the offering statement and such solicitation of interest materials contain information

that is inaccurate or inadequate in any material respect, revised solicitation of interest materials must be redistributed in a substantially similar manner as such materials were originally distributed. Notwithstanding the foregoing in this paragraph (d), if the only information that is inaccurate or inadequate is contained in a Preliminary Offering Circular provided with the solicitation of interest materials pursuant to paragraphs (b)(4)(i) or (ii) of this section, no such redistribution is required in the following circumstances:

(1) in the case of paragraph (b)(4)(i) of this section, the revised Preliminary Offering Circular will be provided to any persons making new inquiries and will be recirculated to any persons making any previous inquiries; or

(2) in the case of paragraph (b)(4)(ii) of this section, the URL continues to link directly to the most recent Preliminary Offering Circular or to the offering statement in which such revised Preliminary Offering Circular was filed.

(e) *Abandoned offerings.* Where an issuer decides to register an offering under the Securities Act after soliciting interest in a contemplated, but subsequently abandoned, Regulation A offering, the abandoned Regulation A offering would not be subject to integration with the registered offering if the issuer engaged in solicitations of interest pursuant to this rule only to qualified institutional buyers and institutional accredited investors permitted by Section 5(d) of the Securities Act. If the issuer engaged in solicitations of interest to persons other than qualified institutional buyers and institutional accredited investors, an abandoned Regulation A offering would not be subject to integration if the issuer (and any underwriter, broker, dealer, or agent used by the issuer in connection with the proposed offering) waits at least 30 calendar days between the last such solicitation of interest in the Regulation A offering and the filing of the registration statement with the Commission.

§ 230.256 Definition of ''qualified purchaser''.

For purposes of Section 18(b)(3) of the Securities Act [15 U.S.C. 77r(b)(3)], a ''qualified purchaser'' means any person to whom securities are offered or sold pursuant to a Tier 2 offering of this Regulation A.

§ 230.257 Periodic and current reporting; exit report.

(a) *Tier 1: Exit report.* Each issuer that has filed an offering statement for a Tier 1 offering that has been qualified pursuant to this Regulation A must file an exit report on Form 1–Z (§ 239.94 of this chapter) not later than 30 calendar days after the termination or completion of the offering.

(b) *Tier 2: Periodic and current reporting.* Each issuer that has filed an offering statement for a Tier 2 offering that has been qualified pursuant to this Regulation A must file with the Commission the following periodic and current reports:

(1) *Annual reports.* An annual report on Form 1–K (§ 239.91 of this chapter) for the fiscal year in which the offering statement became qualified and for any fiscal year thereafter, unless the issuer's obligation to file such annual report is suspended under paragraph (d) of this section. Annual reports must be filed within the period specified in Form 1–K.

(2) *Special financial report.* (i) A special financial report on Form 1–K or Form 1–SA if the offering statement did not contain the following:

(A) Audited financial statements for the issuer's most recent fiscal year (or for the life of the issuer if less than a full fiscal year) preceding the fiscal year in which the issuer's offering statement became qualified; or

(B) unaudited financial statements covering the first six months of the issuer's current fiscal year if the offering statement was qualified during the last six months of that fiscal year.

(ii) The special financial report described in paragraph (b)(2)(i)(A) of this section must be filed under cover of Form 1–K within 120 calendar days after the qualification date of the offering statement and must include audited financial statements for such fiscal year or other period specified in that paragraph, as the case may be. The special financial report described in paragraph (b)(2)(i)(B) of this section must be filed under cover of Form 1–SA within 90 calendar days after the qualification date of the offering statement and must include the semiannual financial statements for the first six months of the issuer's fiscal year, which may be unaudited.

(iii) A special financial report must be signed in accordance with the requirements of the form on which it is filed.

(3) *Semiannual report.* A semiannual report on Form 1–SA (§ 239.92 of this chapter) within the period specified in Form 1–SA. Semiannual reports must cover the first six months of each fiscal year of the issuer, commencing with the first six months of the fiscal year immediately following the most recent fiscal year for which full financial statements were included in the offering statement, or, if the offering statement included financial statements for the first six months of the fiscal year following the most recent full fiscal year, for the first six months of the following fiscal year.

(4) *Current reports.* Current reports on Form 1–U (§ 239.93 of this chapter) with respect to the matters and within the period specified in that form, unless substantially the same information has been previously reported to the Commission by the issuer under cover of Form 1–K or Form 1–SA.

(5) *Reporting by successor issuers.* Where in connection with a succession by merger, consolidation, exchange of securities, acquisition of assets or otherwise, securities of any issuer that is not required to file reports pursuant to paragraph (b) of this section are issued to the holders of any class of securities of another issuer that is required to file such reports, the duty to file reports pursuant to paragraph (b) of this section shall be deemed to have been assumed by the issuer of the class of securities so issued. The successor issuer must, after the consummation of the succession, file reports in accordance with paragraph (b) of this section, unless that issuer is exempt from filing such reports or the duty to file such reports is terminated or suspended under paragraph (d) of this section.

(c) *Amendments.* All amendments to the reports described in paragraphs (a) and (b) of this section must be filed under cover of the form amended, marked with the letter *A* to designate the document as an amendment, *e.g.,* ''1–K/A,'' and in compliance with pertinent requirements applicable to such reports. Amendments filed pursuant to this paragraph (c) must set forth the complete text of each item as amended, but need not include any items that were not amended. Amendments must be numbered sequentially and be filed separately for each report amended. Amendments must be signed on behalf of the issuer by a duly authorized representative of the issuer. An amendment to any report required to include certifications as specified in the applicable form must include new certifications by the appropriate persons.

(d) *Suspension of duty to file reports.* (1) The duty to file reports under this rule shall be automatically suspended if and so long as the issuer is subject to the duty to file reports required by section 13 or 15(d) of the Exchange Act (15 U.S.C. 78m or 15 U.S.C. 78o).

(2) The duty to file reports under paragraph (b) of this section with respect to a class of securities held of

record (as defined in Rule 12g5–1 (§ 240.12g5–1 of this chapter)) by less than 300 persons, or less than 1,200 persons for a bank (as defined in Section 3(a)(6) of the Exchange Act (15 U.S.C. 78c(a)(6)), or a bank holding company (as defined in section 2 of the Bank Holding Company Act of 1956 (12 U.S.C. 1841)), shall be suspended for such class of securities immediately upon filing with the Commission an exit report on Form 1–Z (§ 239.94 of this chapter) if the issuer of such class has filed all reports due pursuant to this rule before the date of such Form 1–Z filing for the shorter of:

(i) The period since the issuer became subject to such reporting obligation; or

(ii) Its most recent three fiscal years and the portion of the current year preceding the date of filing Form 1–Z.

(3) For the purposes of paragraph (d)(2) of this section, the term *class* shall be construed to include all securities of an issuer that are of substantially similar character and the holders of which enjoy substantially similar rights and privileges. If the Form 1–Z is subsequently withdrawn or if it is denied because the issuer was ineligible to use the form, the issuer must, within 60 calendar days, file with the Commission all reports which would have been required if such exit report had not been filed. If the suspension resulted from the issuer's merger into, or consolidation with, another issuer or issuers, the notice must be filed by the successor issuer.

(4) The ability to suspend reporting, as described in paragraph (d)(2) of this section, is not available for any class of securities if:

(i) During that fiscal year a Tier 2 offering statement was qualified;

(ii) The issuer has not filed an annual report under this rule or the Exchange Act for the fiscal year in which a Tier 2 offering statement was qualified; or

(iii) Offers or sales of securities of that class are being made pursuant to a Tier 2 Regulation A offering.

(e) *Termination of duty to file reports.* If the duty to file reports is suspended pursuant to paragraph (d)(1) of this section and such suspension ends because the issuer terminates or suspends its duty to file reports under the Exchange Act, the issuer's obligation to file reports under paragraph (b) of this section shall:

(1) Automatically terminate if the issuer is eligible to suspend its duty to file reports under paragraphs (d)(2) and (3) of this section; or

(2) Recommence with the report covering the most recent financial period after that included in any effective registration statement or filed Exchange Act report.

§ 230.258 Suspension of the exemption.

(a) *Suspension.* The Commission may at any time enter an order temporarily suspending a Regulation A exemption if it has reason to believe that:

(1) No exemption is available or any of the terms, conditions or requirements of Regulation A have not been complied with;

(2) The offering statement, any sales or solicitation of interest material, or any report filed pursuant to Rule 257 (§ 230.257) contains any untrue statement of a material fact or omits to state a material fact necessary in order to make the statements made, in light of the circumstances under which they are made, not misleading;

(3) The offering is being made or would be made in violation of section 17 of the Securities Act;

(4) An event has occurred after the filing of the offering statement that would have rendered the exemption hereunder unavailable if it had occurred before such filing;

(5) Any person specified in Rule 262(a) (§ 230.262(a)) has been indicted for any crime or offense of the character specified in Rule 262(a)(1) (§ 230.262(a)(1)), or any proceeding has been initiated for the purpose of enjoining any such person from engaging in or continuing any conduct or practice of the character specified in Rule 262(a)(2) (§ 230.262(a)(2)), or any proceeding has been initiated for the purposes of Rule 262(a)(3)–(8) (§ 230.262(a)(3) through (8)); or

(6) The issuer or any promoter, officer, director, or underwriter has failed to cooperate, or has obstructed or refused to permit the making of an investigation by the Commission in connection with any offering made or proposed to be made in reliance on Regulation A.

(b) *Notice and hearing.* Upon the entry of an order under paragraph (a) of this section, the Commission will promptly give notice to the issuer, any underwriter, and any selling securityholder:

(1) That such order has been entered, together with a brief statement of the reasons for the entry of the order; and

(2) That the Commission, upon receipt of a written request within 30 calendar days after the entry of the order, will, within 20 calendar days after receiving the request, order a hearing at a place to be designated by the Commission.

(c) *Suspension order.* If no hearing is requested and none is ordered by the Commission, an order entered under paragraph (a) of this section shall become permanent on the 30th calendar day after its entry and shall remain in effect unless or until it is modified or vacated by the Commission. Where a hearing is requested or is ordered by the Commission, the Commission will, after notice of and opportunity for such hearing, either vacate the order or enter an order permanently suspending the exemption.

(d) *Permanent suspension.* The Commission may, at any time after notice of and opportunity for hearing, enter an order permanently suspending the exemption for any reason upon which it could have entered a temporary suspension order under paragraph (a) of this section. Any such order shall remain in effect until vacated by the Commission.

(e) *Notice procedures.* All notices required by this rule must be given by personal service, registered or certified mail to the addresses given by the issuer, any underwriter and any selling securityholder in the offering statement.

§ 230.259 Withdrawal or abandonment of offering statements.

(a) *Withdrawal.* If none of the securities that are the subject of an offering statement has been sold and such offering statement is not the subject of a proceeding under Rule 258 (§ 230.258), the offering statement may be withdrawn with the Commission's consent. The application for withdrawal must state the reason the offering statement is to be withdrawn and must be signed by an authorized representative of the issuer. Any withdrawn document will remain in the Commission's files, as well as the related request for withdrawal.

(b) *Abandonment.* When an offering statement has been on file with the Commission for nine months without amendment and has not become qualified, the Commission may, in its discretion, declare the offering statement abandoned. If the offering statement has been amended, the nine-month period shall be computed from the date of the latest amendment.

§ 230.260 Insignificant deviations from a term, condition or requirement of Regulation A.

(a) *Failure to comply.* A failure to comply with a term, condition or requirement of Regulation A will not result in the loss of the exemption from the requirements of section 5 of the Securities Act for any offer or sale to a particular individual or entity, if the person relying on the exemption establishes that:

(1) The failure to comply did not pertain to a term, condition or

requirement directly intended to protect that particular individual or entity;

(2) The failure to comply was insignificant with respect to the offering as a whole, provided that any failure to comply with Rule 251(a), (b), and (d)(1) and (3) (§ 230.251(a), (b), and (d)(1) and (3)) shall be deemed to be significant to the offering as a whole; and

(3) A good faith and reasonable attempt was made to comply with all applicable terms, conditions and requirements of Regulation A.

(b) *Action by Commission*. A transaction made in reliance upon Regulation A must comply with all applicable terms, conditions and requirements of the regulation. Where an exemption is established only through reliance upon paragraph (a) of this section, the failure to comply shall nonetheless be actionable by the Commission under section 20 of the Securities Act.

(c) *Suspension*. This provision provides no relief or protection from a proceeding under Rule 258 (§ 230.258).

§ 230.261 Definitions.

As used in this Regulation A, all terms have the same meanings as in Rule 405 (§ 230.405), except that all references to *registrant* in those definitions shall refer to the issuer of the securities to be offered and sold under Regulation A. In addition, these terms have the following meanings:

(a) *Affiliated issuer*. An affiliate (as defined in Rule 501 (§ 230.501)) of the issuer that is issuing securities in the same offering.

(b) *Business day*. Any day except Saturdays, Sundays or United States federal holidays.

(c) *Eligible securities*. Equity securities, debt securities, and securities convertible or exchangeable to equity interests, including any guarantees of such securities, but not including asset-backed securities as such term is defined in Item 1101(c) of Regulation AB.

(d) *Final order*. A written directive or declaratory statement issued by a federal or state agency described in Rule 262(a)(3) (§ 230.262(a)(3)) under applicable statutory authority that provides for notice and an opportunity for hearing, which constitutes a final disposition or action by that federal or state agency.

(e) *Final offering circular*. The more recent of: the current offering circular contained in a qualified offering statement; and any offering circular filed pursuant to Rule 253(g) (§ 230.253(g)). If, however, the issuer is relying on Rule 253(b) ((§ 230.253(b)), the Final Offering Circular is the most recent of the offering circular filed pursuant to Rule 253(g)(1) or (3) (§ 230.253(g)(1) or (3)) and any subsequent offering circular filed pursuant to Rule 253(g) (§ 230.253(g)).

(f) *Offering statement*. An offering statement prepared pursuant to Regulation A.

(g) *Preliminary offering circular*. The offering circular described in Rule 254 (§ 230.254).

§ 230.262 Disqualification provisions.

(a) *Disqualification events*. No exemption under this Regulation A shall be available for a sale of securities if the issuer; any predecessor of the issuer; any affiliated issuer; any director, executive officer, other officer participating in the offering, general partner or managing member of the issuer; any beneficial owner of 20% or more of the issuer's outstanding voting equity securities, calculated on the basis of voting power; any promoter connected with the issuer in any capacity at the time of filing, any offer after qualification, or such sale; any person that has been or will be paid (directly or indirectly) remuneration for solicitation of purchasers in connection with such sale of securities; any general partner or managing member of any such solicitor; or any director, executive officer or other officer participating in the offering of any such solicitor or general partner or managing member of such solicitor:

(1) Has been convicted, within ten years before the filing of the offering statement (or five years, in the case of issuers, their predecessors and affiliated issuers), of any felony or misdemeanor:

(i) In connection with the purchase or sale of any security;

(ii) Involving the making of any false filing with the Commission; or

(iii) Arising out of the conduct of the business of an underwriter, broker, dealer, municipal securities dealer, investment adviser or paid solicitor of purchasers of securities;

(2) Is subject to any order, judgment or decree of any court of competent jurisdiction, entered within five years before the filing of the offering statement, that, at the time of such filing, restrains or enjoins such person from engaging or continuing to engage in any conduct or practice:

(i) In connection with the purchase or sale of any security;

(ii) Involving the making of any false filing with the Commission; or

(iii) Arising out of the conduct of the business of an underwriter, broker, dealer, municipal securities dealer, investment adviser or paid solicitor of purchasers of securities;

(3) Is subject to a final order (as defined in Rule 261 (§ 230.261)) of a state securities commission (or an agency or officer of a state performing like functions); a state authority that supervises or examines banks, savings associations, or credit unions; a state insurance commission (or an agency or officer of a state performing like functions); an appropriate federal banking agency; the U.S. Commodity Futures Trading Commission; or the National Credit Union Administration that:

(i) At the time of the filing of the offering statement, bars the person from:

(A) Association with an entity regulated by such commission, authority, agency, or officer;

(B) Engaging in the business of securities, insurance or banking; or

(C) Engaging in savings association or credit union activities; or

(ii) Constitutes a final order based on a violation of any law or regulation that prohibits fraudulent, manipulative, or deceptive conduct entered within ten years before such filing of the offering statement;

(4) Is subject to an order of the Commission entered pursuant to section 15(b) or 15B(c) of the Securities Exchange Act of 1934 (15 U.S.C. 78*o*(b) or 78*o*–4(c)) or section 203(e) or (f) of the Investment Advisers Act of 1940 (15 U.S.C. 80b–3(e) or (f)) that, at the time of the filing of the offering statement:

(i) Suspends or revokes such person's registration as a broker, dealer, municipal securities dealer or investment adviser;

(ii) Places limitations on the activities, functions or operations of such person; or

(iii) Bars such person from being associated with any entity or from participating in the offering of any penny stock;

(5) Is subject to any order of the Commission entered within five years before the filing of the offering statement that, at the time of such filing, orders the person to cease and desist from committing or causing a violation or future violation of:

(i) Any scienter-based anti-fraud provision of the federal securities laws, including without limitation section 17(a)(1) of the Securities Act of 1933 (15 U.S.C. 77q(a)(1)), section 10(b) of the Securities Exchange Act of 1934 (15 U.S.C. 78j(b)) and 17 CFR 240.10b–5, section 15(c)(1) of the Securities Exchange Act of 1934 (15 U.S.C. 78*o*(c)(1)) and section 206(1) of the Investment Advisers Act of 1940 (15 U.S.C. 80b–6(1)), or any other rule or regulation thereunder; or

(ii) Section 5 of the Securities Act of 1933 (15 U.S.C. 77e).

(6) Is suspended or expelled from membership in, or suspended or barred from association with a member of, a registered national securities exchange or a registered national or affiliated securities association for any act or omission to act constituting conduct inconsistent with just and equitable principles of trade;

(7) Has filed (as a registrant or issuer), or was or was named as an underwriter in, any registration statement or offering statement filed with the Commission that, within five years before the filing of the offering statement, was the subject of a refusal order, stop order, or order suspending the Regulation A exemption, or is, at the time of such filing, the subject of an investigation or proceeding to determine whether a stop order or suspension order should be issued; or

(8) Is subject to a United States Postal Service false representation order entered within five years before the filing of the offering statement, or is, at the time of such filing, subject to a temporary restraining order or preliminary injunction with respect to conduct alleged by the United States Postal Service to constitute a scheme or device for obtaining money or property through the mail by means of false representations.

(b) *Transition, waivers, reasonable care exception.* Paragraph (a) of this section shall not apply:

(1) With respect to any order under § 230.262(a)(3) or (5) that occurred or was issued before June 19, 2015;

(2) Upon a showing of good cause and without prejudice to any other action by the Commission, if the Commission determines that it is not necessary under the circumstances that an exemption be denied;

(3) If, before the filing of the offering statement, the court or regulatory authority that entered the relevant order, judgment or decree advises in writing (whether contained in the relevant judgment, order or decree or separately to the Commission or its staff) that disqualification under paragraph (a) of this section should not arise as a consequence of such order, judgment or decree; or

(4) If the issuer establishes that it did not know and, in the exercise of reasonable care, could not have known that a disqualification existed under paragraph (a) of this section.

Note to paragraph (b)(4). An issuer will not be able to establish that it has exercised reasonable care unless it has made, in light of the circumstances, factual inquiry into whether any disqualifications exist. The nature and scope of the factual inquiry will vary based on the facts and circumstances concerning, among other things, the issuer and the other offering participants.

(c) *Affiliated issuers.* For purposes of paragraph (a) of this section, events relating to any affiliated issuer that occurred before the affiliation arose will be not considered disqualifying if the affiliated entity is not:

(1) In control of the issuer; or

(2) Under common control with the issuer by a third party that was in control of the affiliated entity at the time of such events.

(d) *Disclosure of prior ''bad actor'' events.* The issuer must include in the offering circular a description of any matters that would have triggered disqualification under paragraphs (a)(3) and (5) of this section but occurred before June 19, 2015. The failure to provide such information shall not prevent an issuer from relying on Regulation A if the issuer establishes that it did not know and, in the exercise of reasonable care, could not have known of the existence of the undisclosed matter or matters.

§ 230.263 Consent to service of process.

(a) If the issuer is not organized under the laws of any of the states or territories of the United States of America, it shall furnish to the Commission a written irrevocable consent and power of attorney on Form F–X (§ 239.42 of this chapter) at the time of filing the offering statement required by Rule 252 (§ 230.252).

(b) Any change to the name or address of the agent for service of the issuer shall be communicated promptly to the Commission through amendment of the requisite form and referencing the file number of the relevant offering statement.

■ 6. Section 230.505(b)(2)(iii)(A) and (B) are revised to read as follows:

§ 230.505 Exemption for limited offers and sales of securities not exceeding $5,000,000.

* * * * *

(b) * * *

(2) * * *

(iii) * * *

(A) The term *filing of the offering statement* as used in § 230.262 shall mean the first sale of securities under this section;

(B) The term *underwriter* as used in § 230.262(a) shall mean a person that has been or will be paid directly or indirectly remuneration for solicitation of purchasers in connection with sales of securities under this section; and

* * * * *

PART 232—REGULATION S–T—GENERAL RULES AND REGULATIONS FOR ELECTRONIC FILINGS

■ 7. The authority citation for part 232 is revised to read in part as follows:

Authority: 15 U.S.C. 77c, 77f, 77g, 77h, 77j, 77s(a), 77z–3, 77sss(a), 78c(b), 78*l*, 78m, 78n, 78o(d), 78w(a), 78*ll*, 80a–6(c), 80a–8, 80a–29, 80a–30, 80a–37, 7201 *et seq.*; and 18 U.S.C. 1350, unless otherwise noted.

* * * * *

■ 8. Section 232.101 is amended by:

■ a. Revising paragraph (a)(1)(vii), (xv), and (xvi), and (c)(6);

■ b. Adding paragraph (a)(1)(xvii); and

■ c. Removing and reserving paragraph (b)(8).

The revisions and addition read as follows:

§ 232.101 Mandated electronic submissions and exceptions.

(a) * * *

(1) * * *

(vii) Form F–X (§ 239.42 of this chapter) when filed in connection with a Form CB (§§ 239.800 and 249.480 of this chapter) or a Form 1–A (§ 239.90 of this chapter);

* * * * *

(xv) Form ABS–EE (§ 249.1401 of this chapter);

(xvi) Form ABS–15G (as defined in § 249.1400 of this chapter); and

(xvii) Filings made pursuant to Regulation A (§§ 230.251–230.263 of this chapter).

* * * * *

(c) * * *

(6) Filings on Form 144 (§ 239.144 of this chapter) where the issuer of the securities is not subject to the reporting requirements of section 13 or 15(d) of the Exchange Act (15 U.S.C. 78m or 78o(d), respectively).

* * * * *

PART 239—FORMS PRESCRIBED UNDER THE SECURITIES ACT OF 1933

■ 9. The authority citation for part 239 is revised to read in part as follows:

Authority: 15 U.S.C. 77c, 77f, 77g, 77h, 77j, 77s, 77z–2, 77z–3, 77sss, 78c, 78l, 78m, 78n, 78o(d), 78o–7 note, 78u–5, 78w(a), 78*ll*, 78mm, 80a–2(a), 80a–3, 80a–8, 80a–9, 80a–10, 80a–13, 80a–24, 80a–26, 80a–29, 80a–30, and 80a–37, unless otherwise noted.

* * * * *

■ 10. Amend Form 1–A (referenced in § 239.90) by revising it to read as follows:

UNITED STATES SECURITIES AND EXCHANGE COMMISSION

Washington, DC 20549

FORM 1–A

REGULATION A OFFERING STATEMENT UNDER THE SECURITIES ACT OF 1933

GENERAL INSTRUCTIONS

I. Eligibility Requirements for Use of Form 1–A.

This Form is to be used for securities offerings made pursuant to Regulation A (17 CFR 230.251 *et seq.*). Careful attention should be directed to the terms, conditions and requirements of Regulation A, especially Rule 251, because the exemption is not available to all issuers or for every type of securities transaction. Further, the aggregate offering price and aggregate sales of securities in any 12-month period is strictly limited to $20 million for Tier 1 offerings and $50 million for Tier 2 offerings, including no more than $6 million offered by all selling securityholders that are affiliates of the issuer for Tier 1 offerings and $15 million by all selling securityholders that are affiliates of the issuer for Tier 2 offerings. Please refer to Rule 251 of Regulation A for more details.

II. Preparation, Submission and Filing of the Offering Statement.

An offering statement must be prepared by all persons seeking exemption under the provisions of Regulation A. Parts I, II and III must be addressed by all issuers. Part II, which relates to the content of the required offering circular, provides alternative formats, of which the issuer must choose one. General information regarding the preparation, format, content, and submission or filing of the offering statement is contained in Rule 252. Information regarding non-public submission of the offering statement is contained in Rule 252(d). Requirements relating to the offering circular are contained in Rules 253 and 254. The offering statement must be submitted or filed with the Securities and Exchange Commission in electronic format by means of the Commission's Electronic Data Gathering, Analysis and Retrieval System (EDGAR) in accordance with the EDGAR rules set forth in Regulation S–T (17 CFR part 232) for such submission or filing.

III. Incorporation by Reference and Cross-Referencing.

An issuer may incorporate by reference to other documents previously submitted or filed on EDGAR. Cross-referencing within the offering statement is also encouraged to avoid repetition of information. For example, you may respond to an item of this Form by providing a cross-reference to the location of the information in the financial statements, instead of repeating such information. Incorporation by reference and cross-referencing are subject to the following additional conditions:

(a) The use of incorporation by reference and cross-referencing in Part II of this Form is limited to the following items:

(1) Items 2–14 of Part II if following the Offering Circular format;

(2) Items 3–11 (other than Item 11(e)) of Form S–1 if following the Part I of Form S–1 format; or

(3) Items 3–26, 28, and 30 of Form S–11 if following the Part I of Form S–11 format.

(b) Descriptions of where the information incorporated by reference or cross-referenced can be found must be specific and must clearly identify the relevant document and portion thereof where such information can be found. For exhibits incorporated by reference, this description must be noted in the exhibits index for each relevant exhibit. All descriptions of where information incorporated by reference can be found must be accompanied by a hyperlink to the incorporated document on EDGAR, which hyperlink need not remain active after the filing of the offering statement. Inactive hyperlinks must be updated in any amendment to the offering statement otherwise required.

(c) Reference may not be made to any document if the portion of such document containing the pertinent information includes an incorporation by reference to another document. Incorporation by reference to documents not available on EDGAR is not permitted. Incorporating information into the financial statements from elsewhere is not permitted. Information shall not be incorporated by reference or cross-referenced in any case where such incorporation would render the statement or report incomplete, unclear, or confusing.

(d) If any substantive modification has occurred in the text of any document incorporated by reference since such document was filed, the issuer must file with the reference a statement containing the text and date of such modification.

IV. Supplemental Information.

The information specified below must be furnished to the Commission as supplemental information, if applicable. Supplemental information shall not be required to be filed with or deemed part of the offering statement, unless otherwise required. The information shall be returned to the issuer upon request made in writing at the time of submission, provided that the return of such information is consistent with the protection of investors and the provisions of the Freedom of Information Act [5 U.S.C. 552] and the information was not filed in electronic format.

(a) A statement as to whether or not the amount of compensation to be allowed or paid to the underwriter has been cleared with the Financial Industry Regulatory Authority (FINRA).

(b) Any engineering, management, market, or similar report referenced in the offering circular or provided for external use by the issuer or by a principal underwriter in connection with the proposed offering. There must also be furnished at the same time a statement as to the actual or proposed use and distribution of such report or memorandum. Such statement must identify each class of persons who have received or will receive the report or memorandum, and state the number of copies distributed to each such class along with a statement as to the actual or proposed use and distribution of such report or memorandum.

(c) Such other information as requested by the staff in support of statements, representations and other assertions contained in the offering statement or any correspondence to the staff.

Correspondence appropriately responding to any staff comments made on the offering statement must also be furnished electronically. When applicable, such correspondence must clearly indicate where changes responsive to the staff's comments may be found in the offering statement.

PART I—NOTIFICATION

The following information must be provided in the XML-based portion of Form 1–A available through the EDGAR portal and must be completed or updated before uploading each offering statement or amendment thereto. The format of Part I shown below may differ from the electronic version available on EDGAR. The electronic version of Part I will allow issuers to attach Part II and Part III for filing by means of EDGAR. All items must be addressed, unless otherwise indicated.

* * * * *

☐ No changes to the information required by Part I have occurred since the last filing of this offering statement.

ITEM 1. Issuer Information

Exact name of issuer as specified in the issuer's charter: _____

Jurisdiction of incorporation/organization: _____

Year of incorporation: _____

CIK: _____

Primary Standard Industrial Classification Code: _____

I.R.S. Employer Identification Number: _____

Total number of full-time employees: _____

Total number of part-time employees: _____

Contact Information

Address of Principal Executive Offices: _____

Telephone:(____) _____

Provide the following information for the person the Securities and Exchange Commission's staff should call in connection with any pre-qualification review of the offering statement: _____

Name: _____

Address: _____

Telephone: (____) _____

Provide up to two email addresses to which the Securities and Exchange Commission's staff may send any comment letters relating to the offering statement. After qualification of the offering statement, such email addresses are not required to remain active: _____

Financial Statements

Industry Group (select one): ☐ Banking ☐ Insurance ☐ Other

Use the financial statements for the most recent fiscal period contained in this offering statement to provide the following information about the issuer. The following table does not include all of the line items from the financial statements. Long Term Debt would include notes payable, bonds, mortgages, and similar obligations. To determine ''Total Revenues'' for all companies selecting ''Other'' for their industry group, refer to Article 5–03(b)(1) of Regulation S–X. For companies selecting ''Insurance,'' refer to Article 7–04 of Regulation S–X for calculation of ''Total Revenues'' and paragraphs 5 and 7(a) for ''Costs and Expenses Applicable to Revenues''.

[If ''Other'' is selected, display the following options in the Financial Statements table:]

Balance Sheet Information

Cash and Cash Equivalents: _____

Investment Securities: _____

Accounts and Notes Receivable: _____

Property, Plant and Equipment (PP&E): _____

Total Assets: _____

Accounts Payable and Accrued Liabilities: _____

Long Term Debt: _____

Total Liabilities: _____

Total Stockholders' Equity: _____

Total Liabilities and Equity: _____

Income Statement Information

Total Revenues: _____

Costs and Expenses Applicable to Revenues: _____

Depreciation and Amortization: _____

Net Income: _____

Earnings Per Share—Basic: _____

Earnings Per Share—Diluted: _____

[If ''Banking'' is selected, display the following options in the Financial Statements table:]

Balance Sheet Information

Cash and Cash Equivalents: _____

Investment Securities: _____

Loans: _____

Property and Equipment: _____

Total Assets: _____

Accounts Payable and Accrued Liabilities: _____

Deposits: _____

Long Term Debt: _____

Total Liabilities: _____

Total Stockholders' Equity: _____

Total Liabilities and Equity: _____

Income Statement Information

Total Interest Income: _____

Total Interest Expense: _____

Depreciation and Amortization: _____

Net Income: _____

Earnings Per Share—Basic: _____

Earnings Per Share—Diluted: _____

[If ''Insurance'' is selected, display the following options in the Financial Statements table:]

Balance Sheet Information

Cash and Cash Equivalents: _____

Total Investments: _____

Accounts and Notes Receivable: _____

Property and Equipment: _____

Total Assets: _____

Accounts Payable and Accrued Liabilities: _____

Policy Liabilities and Accruals: _____

Long Term Debt: _____

Total Liabilities: _____

Total Stockholders' Equity: _____

Total Liabilities and Equity: _____

Income Statement Information

Total Revenues: _____

Costs and Expenses Applicable to Revenues: _____

Depreciation and Amortization: _____

Net Income: _____

Earnings Per Share—Basic: _____

Earnings Per Share—Diluted: _____

[End of section that varies based on the selection of Industry Group]

Name of Auditor (if any): _____

Outstanding Securities

	Name of class (if any)	Units outstanding	CUSIP (if any)	Name of trading center or quotation medium (if any)
Common Equity Preferred Equity Debt Securities				

ITEM 2. Issuer Eligibility

☐ Check this box to certify that all of the following statements are true for the issuer(s):

- Organized under the laws of the United States or Canada, or any State, Province, Territory or possession thereof, or the District of Columbia.
- Principal place of business is in the United States or Canada.
- Not subject to section 13 or 15(d) of the Securities Exchange Act of 1934.
- Not a development stage company that either (a) has no specific business plan or purpose, or (b) has indicated that its business plan is to merge with an unidentified company or companies.
- Not an investment company registered or required to be registered under the Investment Company Act of 1940.
- Not issuing fractional undivided interests in oil or gas rights, or a similar interest in other mineral rights.
- Not issuing asset-backed securities as defined in Item 1101(c) of Regulation AB.
- Not, and has not been, subject to any order of the Commission entered pursuant to Section 12(j) of the Exchange Act (15 U.S.C. 78*l*(j)) within five years before the filing of this offering statement.
- Has filed with the Commission all the reports it was required to file, if any, pursuant to Rule 257 during the two years immediately before the filing of the offering statement (or for such shorter period that the issuer was required to file such reports).

ITEM 3. Application of Rule 262

☐ Check this box to certify that, as of the time of this filing, each person described in Rule 262 of Regulation A is either not disqualified under that rule or is disqualified but has received a waiver of such disqualification.
☐ Check this box if ''bad actor'' disclosure under Rule 262(d) is provided in Part II of the offering statement.

ITEM 4. Summary Information Regarding the Offering and Other Current or Proposed Offerings

Check the appropriate box to indicate whether you are conducting a Tier 1 or Tier 2 offering:
☐ Tier 1 ☐ Tier 2

Check the appropriate box to indicate whether the annual financial statements have been audited:
☐ Unaudited ☐ Audited

Types of Securities Offered in this Offering Statement (select all that apply):
☐ Equity (common or preferred stock)
☐ Debt
☐ Option, warrant or other right to acquire another security
☐ Security to be acquired upon exercise of option, warrant or other right to acquire security
☐ Tenant-in-common securities
☐ Other (describe)_____

Does the issuer intend to offer the securities on a delayed or continuous basis pursuant to Rule 251(d)(3)?
Yes ☐ No ☐

Does the issuer intend this offering to last more than one year?
Yes ☐ No ☐

Does the issuer intend to price this offering after qualification pursuant to Rule 253(b)?
Yes ☐ No ☐

Will the issuer be conducting a best efforts offering?
Yes ☐ No ☐

Has the issuer used solicitation of interest communications in connection with the proposed offering?
Yes ☐ No ☐

Does the proposed offering involve the resale of securities by affiliates of the issuer?
Yes ☐ No ☐

Number of securities offered:_____

Number of securities of that class already outstanding:_____

The information called for by this item below may be omitted if undetermined at the time of filing or submission, except that if a price range has been included in the offering statement, the midpoint of that range must be used to respond. Please refer to Rule 251(a) for the definition of ''aggregate offering price'' or ''aggregate sales'' as used in this item. Please leave the field blank if undetermined at this time and include a zero if a particular item is not applicable to the offering.

Price per security: $_____

The portion of the aggregate offering price attributable to securities being offered on behalf of the issuer:
$_____

The portion of the aggregate offering price attributable to securities being offered on behalf of selling securityholders:
$_____

The portion of aggregate offering attributable to all the securities of the issuer sold pursuant to a qualified offering statement within the 12 months before the qualification of this offering statement:
$_____

The estimated portion of aggregate sales attributable to securities that may be sold pursuant to any other qualified offering statement concurrently with securities being sold under this offering statement:
$_____

Total: $_____ (the sum of the aggregate offering price and aggregate sales in the four preceding paragraphs).

Anticipated fees in connection with this offering and names of service providers:

	Name of Service Provider	*Fees*
Underwriters:	_____	$_____
Sales Commissions:	_____	$_____
Finders' Fees:	_____	$_____
Audit:	_____	$_____
Legal:	_____	$_____
Promoters:	_____	$_____
Blue Sky Compliance:	_____	$_____

CRD Number of any broker or dealer listed:_____

Estimated net proceeds to the issuer:
$_____

Clarification of responses (if necessary):_____

ITEM 5. Jurisdictions in Which Securities are to be Offered

Using the list below, select the jurisdictions in which the issuer intends to offer the securities:

[List will include all U.S. and Canadian jurisdictions, with an option to add and remove them individually, add all and remove all.]

Using the list below, select the jurisdictions in which the securities are to be offered by underwriters, dealers or sales persons or check the appropriate box:
☐ None
☐ Same as the jurisdictions in which the issuer intends to offer the securities.

[List will include all U.S. and Canadian jurisdictions, with an option to add and remove them individually, add all and remove all.]

ITEM 6. Unregistered Securities Issued or Sold Within One Year

☐ None

As to any unregistered securities issued by the issuer or any of its predecessors or affiliated issuers within one year before the filing of this Form 1–A, state:

(a) Name of such issuer.

(b) (1) Title of securities issued

(2) Total amount of such securities issued

(3) Amount of such securities sold by or for the account of any person who at the time was a director, officer, promoter or principal securityholder of the issuer of such securities, or was an underwriter of any securities of such issuer

(c)(1) Aggregate consideration for which the securities were issued and basis for computing the amount thereof.

_____

_____

_____

(2) Aggregate consideration for which the securities listed in (b)(3) of this item (if any) were issued and the basis for computing the amount thereof (if

different from the basis described in (c)(1)).

(e) Indicate the section of the Securities Act or Commission rule or regulation relied upon for exemption from the registration requirements of such Act and state briefly the facts relied upon for such exemption:_____

_____

PART II — INFORMATION REQUIRED IN OFFERING CIRCULAR

(a) Financial statement requirements regardless of the applicable disclosure format are specified in Part F/S of this Form 1–A. The narrative disclosure contents of offering circulars are specified as follows:

(1) The information required by:

(i) the Offering Circular format described below; or

(ii) The information required by Part I of Form S–1 (17 CFR 239.11) or Part I of Form S–11 (17 CFR 239.18), except for the financial statements, selected financial data, and supplementary financial information called for by those forms. An issuer choosing to follow the Form S–1 or Form S–11 format may follow the requirements for smaller reporting companies if it meets the definition of that term in Rule 405 (17 CFR 230.405). An issuer may only use the Form S–11 format if the offering is eligible to be registered on that form;

The cover page of the offering circular must identify which disclosure format is being followed.

(2) The offering circular must describe any matters that would have triggered disqualification under Rule 262(a)(3) or (a)(5) but for the provisions set forth in Rule 262(b)(1);

(3) The legend required by Rule 253(f) of Regulation A must be included on the offering circular cover page (for issuers following the S–1 or S–11 disclosure models this legend must be included instead of the legend required by Item 501(b)(7) of Regulation S–K);

(4) For preliminary offering circulars, the legend required by Rule 254(a) must be included on the offering circular cover page (for issuers following the S–1 or S–11 disclosure models, this legend must be included instead of the legend required by Item 501(b)(10) of Regulation S–K); and

(5) For Tier 2 offerings where the securities will not be listed on a registered national securities exchange upon qualification, the offering circular cover page must include the following legend highlighted by prominent type or in another manner:

Generally, no sale may be made to you in this offering if the aggregate purchase price you pay is more than 10% of the greater of your annual income or net worth. Different rules apply to accredited investors and non-natural persons. Before making any representation that your investment does not exceed applicable thresholds, we encourage you to review Rule 251(d)(2)(i)(C) of Regulation A. For general information on investing, we encourage you to refer to *www.investor.gov*.

(b) The Commission encourages the use of management's projections of future economic performance that have a reasonable basis and are presented in an appropriate format. See Rule 175, 17 CFR 230.175.

(c) Offering circulars need not follow the order of the items or the order of other requirements of the disclosure form except to the extent otherwise specifically provided. Such information may not, however, be set forth in such a fashion as to obscure any of the required information or any information necessary to keep the required information from being incomplete or misleading. Information requested to be presented in a specified tabular format must be given in substantially the tabular format specified. For incorporation by reference, please refer to General Instruction III of this Form.

OFFERING CIRCULAR

Item 1. Cover Page of Offering Circular

The cover page of the offering circular must be limited to one page and must include the information specified in this item.

(a) Name of the issuer.

Instruction to Item 1(a):

If your name is the same as, or confusingly similar to, that of a company that is well known, include information to eliminate any possible confusion with the other company. If your name indicates a line of business in which you are not engaged or you are engaged only to a limited extent, include information to eliminate any misleading inference as to your business. In some circumstances, disclosure may not be sufficient and you may be required to change your name. You will not be required to change your name if you are an established company, the character of your business has changed, and the investing public is generally aware of the change and the character of your current business.

(b) Full mailing address of the issuer's principal executive offices and the issuer's telephone number (including the area code) and, if applicable, Web site address.

(c) Date of the offering circular.

(d) Title and amount of securities offered. Separately state the amount of securities offered by selling securityholders, if any. Include a cross-reference to the section where the disclosure required by Item 14 of Part II of this Form 1–A has been provided;

(e) The information called for by the applicable table below as to all the securities being offered, in substantially the tabular format indicated. If necessary, you may estimate any underwriting discounts and commissions and the proceeds to the issuer or other persons.

	Price to public	Underwriting discount and commissions	Proceeds to issuer	Proceeds to other persons
Per share/unit:	_____	_____	_____	_____
Total:	_____	_____	_____	_____

If the securities are to be offered on a best efforts basis, the cover page must set forth the termination date, if any, of the offering, any minimum required sale and any arrangements to place the funds received in an escrow, trust, or similar arrangement. The following table must be used instead of the preceding table.

	Price to public	Underwriting discount and commissions	Proceeds to issuer	Proceeds to other persons
Per share/unit:	_____	_____	_____	_____
Total Minimum:	_____	_____	_____	_____
Total Maximum:	_____	_____	_____	_____

Instructions to Item 1(e):

1. The term ''commissions'' includes all cash, securities, contracts, or anything else of value, paid, to be set aside, disposed of, or understandings with or for the benefit of any other persons in which any underwriter is interested, made in connection with the sale of such security.

2. Only commissions paid by the issuer in cash are to be indicated in the table. Commissions paid by other persons or any form of non-cash compensation must be briefly identified in a footnote to the table with a cross-reference to a more complete description elsewhere in the offering circular.

3. Before the commencement of sales pursuant to Regulation A, the issuer must inform the Commission whether or not the amount of compensation to be allowed or paid to the underwriters, as described in the offering statement, has been cleared with FINRA.

4. If the securities are not to be offered for cash, state the basis upon which the offering is to be made.

5. Any finder's fees or similar payments must be disclosed on the cover page with a reference to a more complete discussion in the offering circular. Such disclosure must identify the finder, the nature of the services rendered and the nature of any relationship between the finder and the issuer, its officers, directors, promoters, principal stockholders and underwriters (including any affiliates of such persons).

6. The amount of the expenses of the offering borne by the issuer, including underwriting expenses to be borne by the issuer, must be disclosed in a footnote to the table.

(f) The name of the underwriter or underwriters.

(g) Any legend or information required by the law of any state in which the securities are to be offered.

(h) A cross-reference to the risk factors section, including the page number where it appears in the offering circular. Highlight this cross-reference by prominent type or in another manner.

(i) Approximate date of commencement of proposed sale to the public.

(j) If the issuer intends to rely on Rule 253(b) and a preliminary offering circular is circulated, provide (1) a bona fide estimate of the range of the maximum offering price and the maximum number of securities offered or (2) a bona fide estimate of the principal amount of the debt securities offered. The range must not exceed $2 for offerings where the upper end of the range is $10 or less and 20% if the upper end of the price range is over $10.

Instruction to Item 1(j):

The upper limit of the price range must be used in determining the aggregate offering price for purposes of Rule 251(a).

Item 2. Table of Contents

On the page immediately following the cover page of the offering circular, provide a reasonably detailed table of contents. It must show the page numbers of the various sections or subdivisions of the offering circular. Include a specific listing of the risk factors section required by Item 3 of Part II of this Form 1–A.

Item 3. Summary and Risk Factors

(a) An issuer may provide a summary of the information in the offering circular where the length or complexity of the offering circular makes a summary useful. The summary should be brief and must not contain all of the detailed information in the offering circular.

(b) Immediately following the Table of Contents required by Item 2 or the Summary, there must be set forth under an appropriate caption, a carefully organized series of short, concise paragraphs, summarizing the most significant factors that make the offering speculative or substantially risky. Issuers should avoid generalized statements and include only factors that are specific to the issuer.

Item 4. Dilution

Where there is a material disparity between the public offering price and the effective cash cost to officers, directors, promoters and affiliated persons for shares acquired by them in a transaction during the past year, or that they have a right to acquire, there must be included a comparison of the public contribution under the proposed public offering and the average effective cash contribution of such persons.

Item 5. Plan of Distribution and Selling Securityholders

(a) If the securities are to be offered through underwriters, give the names of the principal underwriters, and state the respective amounts underwritten. Identify each such underwriter having a material relationship to the issuer and state the nature of the relationship. State briefly the nature of the underwriters' obligation to take the securities.

Instructions to Item 5(a):

1. All that is required as to the nature of the underwriters' obligation is whether the underwriters are or will be committed to take and to pay for all of the securities if any are taken, or whether it is merely an agency or the type of best efforts arrangement under which the underwriters are required to take and to pay for only such securities as they may sell to the public. Conditions precedent to the underwriters' taking the securities, including market outs, need not be described except in the case of an agency or best efforts arrangement.

2. It is not necessary to disclose each member of a selling group. Disclosure may be limited to those underwriters who are in privity of contract with the issuer with respect to the offering.

(b) State briefly the discounts and commissions to be allowed or paid to dealers, including all cash, securities, contracts or other consideration to be received by any dealer in connection with the sale of the securities.

(c) Outline briefly the plan of distribution of any securities being issued that are to be offered through the selling efforts of brokers or dealers or otherwise than through underwriters.

(d) If any of the securities are to be offered for the account of securityholders, identify each selling securityholder, state the amount owned by the securityholder prior to the offering, the amount offered for his or her account and the amount to be owned after the offering. Provide such disclosure in a tabular format. At the bottom of the table, provide the total number of securities being offered for the account of all securityholders and describe what percent of the pre-offering outstanding securities of such class the offering represents.

Instruction to Item 5(d):

The term ''securityholder'' in this paragraph refers to beneficial holders, not nominee holders or other such holders of record. If the selling securityholder is an entity, disclosure of the persons who have sole or shared voting or investment power must be included.

(e) Describe any arrangements for the return of funds to subscribers if all of the securities to be offered are not sold. If there are no such arrangements, so state.

(f) If there will be a material delay in the payment of the proceeds of the offering by the underwriter to the issuer, the salient provisions in this regard and the effects on the issuer must be stated.

(g) Describe any arrangement to (1) limit or restrict the sale of other securities of the same class as those to be offered for the period of distribution, (2) stabilize the market for any of the securities to be offered, or (3) withhold commissions, or otherwise to hold each

underwriter or dealer responsible for the distribution of its participation.

(h) Identify any underwriter that intends to confirm sales to any accounts over which it exercises discretionary authority and include an estimate of the amount of securities so intended to be confirmed.

Instruction to Item 5:

Attention is directed to the provisions of Rules 10b 9 [17 CFR 240.10b–9] and 15c2–4 [17 CFR 240.15c2–4] under the Securities Exchange Act of 1934. These rules outline, among other things, antifraud provisions concerning the return of funds to subscribers and the transmission of proceeds of an offering to a seller.

Item 6. Use of Proceeds to Issuer

State the principal purposes for which the net proceeds to the issuer from the securities to be offered are intended to be used and the approximate amount intended to be used for each such purpose. If the issuer will not receive any of proceeds from the offering, so state.

Instructions to Item 6:

1. If any substantial portion of the proceeds has not been allocated for particular purposes, a statement to that effect must be made together with a statement of the amount of proceeds not so allocated.

2. State whether or not the proceeds will be used to compensate or otherwise make payments to officers or directors of the issuer or any of its subsidiaries.

3. For best efforts offerings, describe any anticipated material changes in the use of proceeds if all of the securities being qualified on the offering statement are not sold.

4. If an issuer must provide the disclosure described in Item 9(c) the use of proceeds and plan of operations should be consistent.

5. If any material amounts of other funds are to be used in conjunction with the proceeds, state the amounts and sources of such other funds and whether such funds are firm or contingent.

6. If any material part of the proceeds is to be used to discharge indebtedness, describe the material terms of such indebtedness. If the indebtedness to be discharged was incurred within one year, describe the use of the proceeds arising from such indebtedness.

7. If any material amount of the proceeds is to be used to acquire assets, otherwise than in the ordinary course of business, briefly describe and state the cost of the assets. If the assets are to be acquired from affiliates of the issuer or their associates, give the names of the persons from whom they are to be acquired and set forth the basis used in determining the purchase price to the issuer.

8. The issuer may reserve the right to change the use of proceeds, so long as the reservation is prominently disclosed in the section where the use of proceeds is discussed. It is not necessary to describe the possible alternative uses of proceeds unless the issuer believes that a change in circumstances leading to an alternative use of proceeds is likely to occur.

Item 7. Description of Business

(a) Narrative description of business.

(1) Describe the business done and intended to be done by the issuer and its subsidiaries and the general development of the business during the past three years or such shorter period as the issuer may have been in business. Such description must include, but not be limited to, a discussion of the following factors if such factors are material to an understanding of the issuer's business:

(i) The principal products and services of the issuer and the principal market for and method of distribution of such products and services.

(ii) The status of a product or service if the issuer has made public information about a new product or service that would require the investment of a material amount of the assets of the issuer or is otherwise material.

(iii) If material, the estimated amount spent during each of the last two fiscal years on company-sponsored research and development activities determined in accordance with generally accepted accounting principles. In addition, state, if material, the estimated dollar amount spent during each of such years on material customer-sponsored research activities relating to the development of new products, services or techniques or the improvement of existing products, services or techniques.

(iv) The total number of persons employed by the issuer, indicating the number employed full time.

(v) Any bankruptcy, receivership or similar proceeding.

(vi) Any legal proceedings material to the business or financial condition of the issuer.

(vii) Any material reclassification, merger, consolidation, or purchase or sale of a significant amount of assets not in the ordinary course of business.

(2) The issuer must also describe those distinctive or special characteristics of the issuer's operation or industry that are reasonably likely to have a material impact upon the issuer's future financial performance. Examples of factors that might be discussed include dependence on one or a few major customers or suppliers (including suppliers of raw materials or financing), effect of existing or probable governmental regulation (including environmental regulation), material terms of and/or expiration of material labor contracts or patents, trademarks, licenses, franchises, concessions or royalty agreements, unusual competitive conditions in the industry, cyclicality of the industry and anticipated raw material or energy shortages to the extent management may not be able to secure a continuing source of supply.

(b) Segment Data. If the issuer is required by generally accepted accounting principles to include segment information in its financial statements, an appropriate cross-reference must be included in the description of business.

(c) Industry Guides. The disclosure guidelines in all Securities Act Industry Guides must be followed. To the extent that the industry guides are codified into Regulation S–K, the Regulation S–K industry disclosure items must be followed.

(d) For offerings of limited partnership or limited liability company interests, an issuer must comply with the Commission's interpretive views on substantive disclosure requirements set forth in Securities Act Release No. 6900 (June 17, 1991).

Item 8. Description of Property

State briefly the location and general character of any principal plants or other material physical properties of the issuer and its subsidiaries. If any such property is not held in fee or is held subject to any major encumbrance, so state and briefly describe how held. Include information regarding the suitability, adequacy, productive capacity and extent of utilization of the properties and facilities used in the issuer's business.

Instruction to Item 8:

Detailed descriptions of the physical characteristics of individual properties or legal descriptions by metes and bounds are not required and should not be given.

Item 9. Management's Discussion and Analysis of Financial Condition and Results of Operations

Discuss the issuer's financial condition, changes in financial condition and results of operations for each year and interim period for which financial statements are required, including the causes of material changes from year to year or period to period in financial statement line items, to the extent necessary for an understanding of

the issuer's business as a whole. Information provided also must relate to the segment information of the issuer. Provide the information specified below as well as such other information that is necessary for an investor's understanding of the issuer's financial condition, changes in financial condition and results of operations.

(a) Operating results. Provide information regarding significant factors, including unusual or infrequent events or transactions or new developments, materially affecting the issuer's income from operations, and, in each case, indicating the extent to which income was so affected. Describe any other significant component of revenue or expenses necessary to understand the issuer's results of operations. To the extent that the financial statements disclose material changes in net sales or revenues, provide a narrative discussion of the extent to which such changes are attributable to changes in prices or to changes in the volume or amount of products or services being sold or to the introduction of new products or services.

Instruction to Item 9(a):

1. The discussion and analysis shall focus specifically on material events and uncertainties known to management that would cause reported financial information not to be necessarily indicative of future operating results or of future financial condition. This would include descriptions and amounts of (A) matters that would have an impact on future operations that have not had an impact in the past, and (B) matters that have had an impact on reported operations that are not expected to have an impact upon future operations.

2. Where the consolidated financial statements reveal material changes from year to year in one or more line items, the causes for the changes shall be described to the extent necessary to an understanding of the issuer's businesses as a whole. If the causes for a change in one line item also relate to other line items, no repetition is required and a line-by-line analysis of the financial statements as a whole is not required or generally appropriate. Issuers need not recite the amounts of changes from year to year which are readily computable from the financial statements. The discussion must not merely repeat numerical data contained in the consolidated financial statements.

3. When interim period financial statements are included, discuss any material changes in financial condition from the end of the preceding fiscal year to the date of the most recent interim balance sheet provided. Discuss any material changes in the issuer's results of operations with respect to the most recent fiscal year-to-date period for which an income statement is provided and the corresponding year-to-date period of the preceding fiscal year.

(b) Liquidity and capital resources. Provide information regarding the following:

(1) the issuer's liquidity (both short and long term), including a description and evaluation of the internal and external sources of liquidity and a brief discussion of any material unused sources of liquidity. If a material deficiency in liquidity is identified, indicate the course of action that the issuer has taken or proposes to take to remedy the deficiency.

(2) the issuer's material commitments for capital expenditures as of the end of the latest fiscal year and any subsequent interim period and an indication of the general purpose of such commitments and the anticipated sources of funds needed to fulfill such commitments.

(c) Plan of Operations. Issuers (including predecessors) that have not received revenue from operations during each of the three fiscal years immediately before the filing of the offering statement (or since inception, whichever is shorter) must describe, if formulated, their plan of operation for the 12 months following the commencement of the proposed offering. If such information is not available, the reasons for its unavailability must be stated. Disclosure relating to any plan must include, among other things, a statement indicating whether, in the issuer's opinion, the proceeds from the offering will satisfy its cash requirements or whether it anticipates it will be necessary to raise additional funds in the next six months to implement the plan of operations.

(d) Trend information. The issuer must identify the most significant recent trends in production, sales and inventory, the state of the order book and costs and selling prices since the latest financial year. The issuer also must discuss, for at least the current financial year, any known trends, uncertainties, demands, commitments or events that are reasonably likely to have a material effect on the issuer's net sales or revenues, income from continuing operations, profitability, liquidity or capital resources, or that would cause reported financial information not necessarily to be indicative of future operating results or financial condition.

Item 10. Directors, Executive Officers and Significant Employees

(a) For each of the directors, persons nominated or chosen to become directors, executive officers, persons chosen to become executive officers, and significant employees, provide the information specified below in substantially the following tabular format:

Name	Position	Age	Term of Office (1)	Approximate hours per week for part-time employees (2)
Executive Officers:				
Directors:				
Significant Employees:				

(1) Provide the month and year of the start date and, if applicable, the end date. To the extent you are unable to provide specific dates, provide such other description in the table or in an appropriate footnote clarifying the term of office. If the person is a nominee or chosen to become a director or executive officer, it must be indicated in this column or by footnote.

(2) For executive officers and significant employees that are working part-time, indicate approximately the average number of hours per week or month such person works or is anticipated to work. This column may be left blank for directors. The entire column may be omitted if all those listed in the table work full time for the issuer.

In a footnote to the table, briefly describe any arrangement or understanding between the persons described above and any other persons (naming such persons) pursuant to which the person was or is to be selected to his or her office or position.

Instructions to Item 10(a):

1. No nominee or person chosen to become a director or person chosen to be an executive officer who has not consented to act as such may be named in response to this item.

2. The term ''executive officer'' means the president, secretary, treasurer, any vice president in charge of a principal business function (such as sales, administration, or finance) and any other person who performs similar policy making functions for the issuer.

3. The term ''significant employee'' means persons such as production managers, sales managers, or research scientists, who are not executive officers, but who make or are expected to make significant contributions to the business of the issuer.

(b) Family relationships. State the nature of any family relationship between any director, executive officer, person nominated or chosen by the issuer to become a director or executive officer or any significant employee.

Instruction to Item 10(b):

The term ''family relationship'' means any relationship by blood, marriage, or adoption, not more remote than first cousin.

(c) Business experience. Give a brief account of the business experience during the past five years of each director, executive officer, person nominated or chosen to become a director or executive officer, and each significant employee, including his or her principal occupations and employment during that period and the name and principal business of any corporation or other organization in which such occupations and employment were carried on. When an executive officer or significant employee has been employed by the issuer for less than five years, a brief explanation must be included as to the nature of the responsibilities undertaken by the individual in prior positions to provide adequate disclosure of this prior business experience. What is required is information relating to the level of the employee's professional competence, which may include, depending upon the circumstances, such specific information as the size of the operation supervised.

(d) Involvement in certain legal proceedings. Describe any of the following events which occurred during the past five years and which are material to an evaluation of the ability or integrity of any director, person nominated to become a director or executive officer of the issuer:

(1) A petition under the federal bankruptcy laws or any state insolvency law was filed by or against, or a receiver, fiscal agent or similar officer was appointed by a court for the business or property of such person, or any partnership in which he was general partner at or within two years before the time of such filing, or any corporation or business association of which he was an executive officer at or within two years before the time of such filing; or

(2) Such person was convicted in a criminal proceeding (excluding traffic violations and other minor offenses).

Item 11. Compensation of Directors and Executive Officers

(a) Provide, in substantially the tabular format indicated, the annual compensation of each of the three highest paid persons who were executive officers or directors during the issuer's last completed fiscal year.

Name	Capacities in which compensation was received (e.g., Chief Executive Officer, director, etc.)	Cash compensation ($)	Other compensation ($)	Total compensation ($)
	....			

(b) Provide the aggregate annual compensation of the issuer's directors as a group for the issuer's last completed fiscal year. Specify the total number of directors in the group.

(c) For Tier 1 offerings, the annual compensation of the three highest paid persons who were executive officers or directors and the aggregate annual compensation of the issuer's directors may be provided as a group, rather than as specified in paragraphs (a) and (b) of this item. In such case, issuers must specify the total number of persons in the group.

(d) Briefly describe all proposed compensation to be made in the future pursuant to any ongoing plan or arrangement to the individuals specified in paragraphs (a) and (b) of this item. The description must include a summary of how each plan operates, any performance formula or measure in effect (or the criteria used to determine payment amounts), the time periods over which the measurements of benefits will be determined, payment schedules, and any recent material amendments to the plan. Information need not be included with respect to any group life, health, hospitalization, or medical reimbursement plans that do not discriminate in scope, terms or operation in favor of executive officers or directors of the issuer and that are available generally to all salaried employees.

Instructions to Item 11:

1. In case of compensation paid or to be paid otherwise than in cash, if it is impracticable to determine the cash value thereof, state in a note to the table the nature and amount thereof.

2. This item is to be answered on an accrual basis if practicable; if not so answered, state the basis used.

Item 12. Security Ownership of Management and Certain Securityholders

(a) Include the information specified in paragraph (b) of this item as of the most recent practicable date (stating the date used), in substantially the tabular format indicated, with respect to voting securities beneficially owned by:

(1) all executive officers and directors as a group, individually naming each

director or executive officer who beneficially owns more than 10% of any class of the issuer's voting securities;

(2) any other securityholder who beneficially owns more than 10% of any class of the issuer's voting securities as such beneficial ownership would be calculated if the issuer were subject to Rule 13d–3(d)(1) of the Securities Exchange Act of 1934.

(b) Beneficial Ownership Table:

Title of class	Name and address of beneficial owner (1)	Amount and nature of beneficial ownership	Amount and nature of beneficial ownership acquirable (2)	Percent of class (3)

(1) The address given in this column may be a business, mailing, or residential address. The address may be included in an appropriate footnote to the table rather than in this column.

(2) This column must include the amount of equity securities each beneficial owner has the right to acquire using the manner specified in Rule 13d–3(d)(1) of the Securities Exchange Act of 1934. An appropriate footnote must be included if the column heading does not sufficiently describe the circumstances upon which such securities could be acquired.

(3) This column must use the amounts contained in the two preceding columns to calculate the percent of class owned by such beneficial owner.

Item 13. Interest of Management and Others in Certain Transactions

(a) Describe briefly any transactions or any currently proposed transactions during the issuer's last two completed fiscal years and the current fiscal year, to which the issuer or any of its subsidiaries was or is to be a participant and the amount involved exceeds $50,000 for Tier 1 or the lesser of $120,000 and one percent of the average of the issuer's total assets at year end for the last two completed fiscal years for Tier 2, and in which any of the following persons had or is to have a direct or indirect material interest, naming the person and stating his or her relationship to the issuer, the nature of the person's interest in the transaction and, where practicable, the amount of such interest:

(1) Any director or executive officer of the issuer;

(2) Any nominee for election as a director;

(3) Any securityholder named in answer to Item 12(a)(2);

(4) If the issuer was incorporated or organized within the past three years, any promoter of the issuer; or

(5) Any immediate family member of the above persons. An ''immediate family member'' of a person means such person's child, stepchild, parent, stepparent, spouse, sibling, mother-in-law, father-in-law, son-in-law, daughter-in-law, brother-in-law, sister-in-law, or any person (other than a tenant or employee) sharing such person's household.

Instructions to Item 13(a):

1. For purposes of calculating the amount of the transaction described above, all periodic installments in the case of any lease or other agreement providing for periodic payments must be aggregated to the extent they occurred within the time period described in this item.

2. No information need be given in answer to this item as to any transaction where:

(a) The rates of charges involved in the transaction are determined by competitive bids, or the transaction involves the rendering of services as a common or contract carrier at rates or charges fixed in conformity with law or governmental authority;

(b) The transaction involves services as a bank depositary of funds, transfer agent, registrar, trustee under a trust indenture, or similar services;

(c) The interest of the specified person arises solely from the ownership of securities of the issuer and the specified person receives no extra or special benefit not shared on a pro-rata basis by all of the holders of securities of the class.

3. This item calls for disclosure of indirect as well as direct material interests in transactions. A person who has a position or relationship with a firm, corporation, or other entity which engages in a transaction with the issuer or its subsidiaries may have an indirect interest in such transaction by reason of the position or relationship. However, a person is deemed not to have a material indirect interest in a transaction within the meaning of this item where:

(a) the interest arises only (i) from the person's position as a director of another corporation or organization (other than a partnership) that is a party to the transaction, or (ii) from the direct or indirect ownership by the person and all other persons specified in paragraphs (1) through (5) of this item, in the aggregate, of less than a 10 percent equity interest in another person (other than a partnership) that is a party to the transaction, or (iii) from both such position and ownership;

(b) the interest arises only from the person's position as a limited partner in a partnership in which the person and all other persons specified in paragraphs (1) through (5) of this item had an interest of less than 10 percent; or

(c) the interest of the person arises solely from the holding of an equity interest (unless the equity interest confers management rights similar to a general partner interest) or a creditor interest in another person that is a party to the transaction with the issuer or any of its subsidiaries and the transaction is not material to the other person.

4. Include the name of each person whose interest in any transaction is described and the nature of the relationships by reason of which such interest is required to be described. The amount of the interest of any specified person must be computed without regard to the amount of the profit or loss involved in the transaction. Where it is not practicable to state the approximate amount of the interest, the approximate amount involved in the transaction must be disclosed.

5. Information must be included as to any material underwriting discounts and commissions upon the sale of securities by the issuer where any of the specified persons was or is to be a principal underwriter or is a controlling person, or member, of a firm which was or is to be a principal underwriter. Information need not be given concerning ordinary management fees paid by underwriters to a managing underwriter pursuant to an agreement among underwriters, the parties to which do not include the issuer or its subsidiaries.

6. As to any transaction involving the purchase or sale of assets by or to any issuer or any subsidiary, otherwise than in the ordinary course of business, state the cost of the assets to the purchaser and, if acquired by the seller within two years before the transaction, the cost to the seller.

7. Information must be included in answer to this item with respect to transactions not excluded above which

involve compensation from the issuer or its subsidiaries, directly or indirectly, to any of the specified persons for services in any capacity unless the interest of such persons arises solely from the ownership individually and in the aggregate of less than 10 percent of any class of equity securities of another corporation furnishing the services to the issuer or its subsidiaries.

(b) If any expert named in the offering statement as having prepared or certified any part of the offering statement was employed for such purpose on a contingent basis or, at the time of such preparation or certification or at any time thereafter, had a material interest in the issuer or any of its parents or subsidiaries or was connected with the issuer or any of its subsidiaries as a promoter, underwriter, voting trustee, director, officer or employee, describe the nature of such contingent basis, interest or connection.

Item 14. Securities Being Offered

(a) If capital stock is being offered, state the title of the class and furnish the following information regarding all classes of capital stock outstanding:

(1) Outline briefly: (i) dividend rights; (ii) voting rights; (iii) liquidation rights; (iv) preemptive rights; (v) conversion rights; (vi) redemption provisions; (vii) sinking fund provisions; (viii) liability to further calls or to assessment by the issuer; (ix) any classification of the Board of Directors, and the impact of classification where cumulative voting is permitted or required; (x) restrictions on alienability of the securities being offered; (xi) any provision discriminating against any existing or prospective holder of such securities as a result of such securityholder owning a substantial amount of securities; and (xii) any rights of holders that may be modified otherwise than by a vote of a majority or more of the shares outstanding, voting as a class.

(2) Briefly describe potential liabilities imposed on securityholders under state statutes or foreign law, for example, to employees of the issuer, unless such disclosure would be immaterial because the financial resources of the issuer or other factors are such as to make it unlikely that the liability will ever be imposed.

(3) If preferred stock is to be offered or is outstanding, describe briefly any restriction on the repurchase or redemption of shares by the issuer while there is any arrearage in the payment of dividends or sinking fund installments. If there is no such restriction, so state.

(b) If debt securities are being offered, outline briefly the following:

(1) Provisions with respect to interest, conversion, maturity, redemption, amortization, sinking fund or retirement.

(2) Provisions with respect to the kind and priority of any lien securing the issue, together with a brief identification of the principal properties subject to such lien.

(3) Material affirmative and negative covenants.

Instruction to Item 14(b):

In the case of secured debt there must be stated: (i) the approximate amount of unbonded property available for use against the issuance of bonds, as of the most recent practicable date, and (ii) whether the securities being issued are to be issued against such property, against the deposit of cash, or otherwise.

(c) If securities described are to be offered pursuant to warrants, rights, or convertible securities, state briefly:

(1) the amount of securities issuable upon the exercise or conversion of such warrants, convertible securities or rights;

(2) the period during which and the price at which the warrants, convertible securities or rights are exercisable;

(3) the amounts of warrants, convertible securities or rights outstanding; and

(4) any other material terms of such securities.

(d) In the case of any other kind of securities, include a brief description with comparable information to that required in (a), (b) and (c) of Item 14.

Part F/S

(a) General Rules

(1) The appropriate financial statements set forth below of the issuer, or the issuer and its predecessors or any businesses to which the issuer is a successor must be filed as part of the offering statement and included in the offering circular that is distributed to investors.

(2) Unless the issuer is a Canadian company, financial statements must be prepared in accordance with generally accepted accounting principles in the United States (US GAAP). If the issuer is a Canadian company, such financial statements must be prepared in accordance with either US GAAP or International Financial Reporting Standards (IFRS) as issued by the International Accounting Standards Board (IASB). If the financial statements comply with IFRS, such compliance must be explicitly and unreservedly stated in the notes to the financial statements and if the financial statements are audited, the auditor's report must include an opinion on whether the financial statements comply with IFRS as issued by the IASB.

(3) The issuer may elect to delay complying with any new or revised financial accounting standard until the date that a company that is not an issuer (as defined under section 2(a) of the Sarbanes-Oxley Act of 2002 (15 U.S.C. 7201(a)) is required to comply with such new or revised accounting standard, if such standard also applies to companies that are not issuers. Issuers electing such extension of time accommodation must disclose it at the time the issuer files its offering statement and apply the election to all standards. Issuers electing not to use this accommodation must forgo this accommodation for all financial accounting standards and may not elect to rely on this accommodation in any future filings.

(b) Financial Statements for Tier 1 Offerings

(1) The financial statements prepared pursuant to this paragraph (b), including (b)(7), need not be prepared in accordance with Regulation S–X.

(2) The financial statements prepared pursuant to paragraph (b), including (b)(7), need not be audited. If the financial statements are not audited, they shall be labeled as ''unaudited''. However, if an audit of these financial statements is obtained for other purposes and that audit was performed in accordance with either U.S. generally accepted auditing standards or the Standards of the Public Company Accounting Oversight Board by an auditor that is independent pursuant to either the independence standards of the American Institute of Certified Public Accountants (AICPA) or Rule 2–01 of Regulation S–X, those audited financial statements must be filed, and an audit opinion complying with Rule 2–02 of Regulation S–X must be filed along with such financial statements. The auditor may, but need not, be registered with the Public Company Accounting Oversight Board.

(3) *Consolidated Balance Sheets.* Age of balance sheets at filing and at qualification:

(A) If the filing is made, or the offering statement is qualified, more than three months but no more than nine months after the most recently completed fiscal year end, include a balance sheet as of the two most recently completed fiscal year ends.

(B) If the filing is made, or the offering statement is qualified, more than nine months after the most recently completed fiscal year end, include a balance sheet as of the two most

recently completed fiscal year ends and an interim balance sheet as of a date no earlier than six months after the most recently completed fiscal year end.

(C) If the filing is made, or the offering statement is qualified, within three months after the most recently completed fiscal year end, include a balance sheet as of the two fiscal year ends preceding the most recently completed fiscal year end and an interim balance sheet as of a date no earlier than six months after the date of the most recent fiscal year end balance sheet that is required.

(D) If the filing is made, or the offering statement is qualified, during the period from inception until three months after reaching the annual balance sheet date for the first time, include a balance sheet as of a date within nine months of filing or qualification.

(4) *Statements of comprehensive income, cash flows, and changes in stockholders' equity.* File consolidated statements of income, cash flows, and changes in stockholders' equity for each of the two fiscal years preceding the date of the most recent balance sheet being filed or such shorter period as the issuer has been in existence. If a consolidated interim balance sheet is required by (b)(3) above, consolidated interim statements of income and cash flows shall be provided and must cover at least the first six months of the issuer's fiscal year and the corresponding period of the preceding fiscal year.

(5) *Interim financial statements.* Interim financial statements may be condensed as described in Rule 8–03(a) of Regulation S–X. The interim income statements must be accompanied by a statement that in the opinion of management all adjustments necessary in order to make the interim financial statements not misleading have been included.

(6) *Oil and Gas Producing Activities.* Issuers engaged in oil and gas producing activities must follow the financial accounting and reporting standards specified in Rule 4–10 of Regulation S–X.

(7) *Financial Statements of Other Entities.* The circumstances described below may require you to file financial statements of other entities in the offering statement. The financial statements of other entities must be presented for the same periods as if the other entity was the issuer as described above in paragraphs (b)(3) and (b)(4) unless a shorter period is specified by the rules below. The financial statement of other entities shall follow the same audit requirement as paragraph (b)(2) of this Part F/S.

(i) *Financial Statements of Guarantors and Issuers of Guaranteed Securities.* Financial statements of a subsidiary that issues securities guaranteed by the parent or guarantees securities issued by the parent must be presented as required by Rule 3–10 of Regulation S–X.

(ii) *Financial Statements of Affiliates Whose Securities Collateralize an Issuance.* Financial statements for an issuer's affiliates whose securities constitute a substantial portion of the collateral for any class of securities being offered must be presented as required by Rule 3–16 of Regulation S–X.

(iii) *Financial Statements of Businesses Acquired or to be Acquired.* File the financial statements required by Rule 8–04 of Regulation S–X.

(iv) *Pro Forma Financial Information.* If financial statements are presented under paragraph (b)(7)(iii) above, file pro forma information showing the effects of the acquisition as described in Rule 8–05 of Regulation S–X.

(v) *Real Estate Operations Acquired or to be Acquired.* File the financial information required by Rule 8–06 of Regulation S–X.

Instructions to paragraph (b) in Part F/S:

1. Issuers should refer to Rule 257(b)(2) to determine whether a special financial report will be required after qualification of the offering statement.

2. If the last day that the financial statements included in the offering statement can be accepted, according to the age requirements of this item falls on a Saturday, Sunday, or holiday, such offering statement may be filed on the first business day following the last day of the specified period.

3. As an alternative, an issuer may—but need not—elect to comply with the provisions of paragraph (c).

(c) Financial Statement Requirements for Tier 2 Offerings

(1) In addition to the general rules in paragraph (a), provide the financial statements required by paragraph (b) of this Part F/S, except the following rules should be followed in the preparation of the financial statements:

(i) The issuer and, when applicable, other entities for which financial statements are required, must comply with Article 8 of Regulation S–X, as if it was conducting a registered offering on Form S–1, except the age of interim financial statements may follow paragraphs (b)(3)–(4) of this Part F/S.

(ii) Audited financial statements are required for Tier 2 offerings for the issuer and, when applicable, for financial statements of other entities. However, interim financial statements may be unaudited.

(iii) The audit must be conducted in accordance with either U.S. Generally Accepted Auditing Standards or the standards of the Public Company Accounting Oversight Board (United States) and the report and qualifications of the independent accountant shall comply with the requirements of Article 2 of Regulation S–X. Accounting firms conducting audits for the financial statements included in the offering circular may, but need not, be registered with the Public Company Accounting Oversight Board.

PART III—EXHIBITS

Item 16. Index to Exhibits

(a) An exhibits index must be presented at the beginning of Part III.

(b) Each exhibit must be listed in the exhibit index according to the number assigned to it under Item 17 below.

(c) For incorporation by reference, please refer to General Instruction III of this Form.

Item 17. Description of Exhibits

As appropriate, the following documents must be filed as exhibits to the offering statement.

1. *Underwriting agreement*—Each underwriting contract or agreement with a principal underwriter or letter pursuant to which the securities are to be distributed; where the terms have yet to be finalized, proposed formats may be provided.

2. *Charter and bylaws*—The charter and bylaws of the issuer or instruments corresponding thereto as currently in effect and any amendments thereto.

3. *Instruments defining the rights of securityholders*—

(a) All instruments defining the rights of any holder of the issuer's securities, including but not limited to (i) holders of equity or debt securities being issued; (ii) holders of long-term debt of the issuer, and of all subsidiaries for which consolidated or unconsolidated financial statements are required to be filed.

(b) The following instruments need not be filed if the issuer agrees to file them with the Commission upon request: (i) instruments defining the rights of holders of long-term debt of the issuer and all of its subsidiaries for which consolidated financial statements are required to be filed if such debt is not being issued pursuant to this Regulation A offering and the total amount of such authorized issuance does not exceed 5% of the total assets of the issuer and its subsidiaries on a consolidated basis; (ii) any instrument

with respect to a class of securities that is to be retired or redeemed before the issuance or upon delivery of the securities being issued pursuant to this Regulation A offering and appropriate steps have been taken to assure such retirement or redemption; and (iii) copies of instruments evidencing scrip certificates or fractions of shares.

4. *Subscription agreement*—The form of any subscription agreement to be used in connection with the purchase of securities in this offering.

5. *Voting trust agreement*—Any voting trust agreements and amendments.

6. *Material contracts*

(a) Every contract not made in the ordinary course of business that is material to the issuer and is to be performed in whole or in part at or after the filing of the offering statement or was entered into not more than two years before such filing. Only contracts need be filed as to which the issuer or subsidiary of the issuer is a party or has succeeded to a party by assumption or assignment or in which the issuer or such subsidiary has a beneficial interest. Schedules (or similar attachments) to material contracts may be excluded if not material to an investment decision or if the material information contained in such schedules is otherwise disclosed in the agreement or the offering statement. The material contract filed must contain a list briefly identifying the contents of all omitted schedules, together with an agreement to furnish supplementally a copy of any omitted schedule to the Commission upon request.

(b) If the contract is such as ordinarily accompanies the kind of business conducted by the issuer and its subsidiaries, it is made in the ordinary course of business and need not be filed unless it falls within one or more of the following categories, in which case it must be filed except where immaterial in amount or significance: (i) any contract to which directors, officers, promoters, voting trustees, securityholders named in the offering statement, or underwriters are parties, except where the contract merely involves the purchase or sale of current assets having a determinable market price, at such market price; (ii) any contract upon which the issuer's business is substantially dependent, as in the case of continuing contracts to sell the major part of the issuer's products or services or to purchase the major part of the issuer's requirements of goods, services or raw materials or any franchise or license or other agreement to use a patent, formula, trade secret, process or trade name upon which the issuer's business depends to a material extent; (iii) any contract calling for the acquisition or sale of any property, plant or equipment for a consideration exceeding 15% of such fixed assets of the issuer on a consolidated basis; or (iv) any material lease under which a part of the property described in the offering statement is held by the issuer.

(c) Any management contract or any compensatory plan, contract or arrangement including, but not limited to, plans relating to options, warrants or rights, pension, retirement or deferred compensation or bonus, incentive or profit sharing (or if not set forth in any formal document, a written description) is deemed material and must be filed except for the following: (i) ordinary purchase and sales agency agreements; (ii) agreements with managers of stores in a chain organization or similar organization; (iii) contracts providing for labor or salesperson's bonuses or payments to a class of securityholders, as such; (iv) any compensatory plan, contract or arrangement that pursuant to its terms is available to employees generally and that in operation provides for the same method of allocation of benefits between management and non-management participants.

7. *Plan of acquisition, reorganization, arrangement, liquidation, or succession*—Any material plan of acquisition, disposition, reorganization, readjustment, succession, liquidation or arrangement and any amendments thereto described in the offering statement. Schedules (or similar attachments) to these exhibits must not be filed unless such schedules contain information that is material to an investment decision and that is not otherwise disclosed in the agreement or the offering statement. The plan filed must contain a list briefly identifying the contents of all omitted schedules, together with an agreement to furnish supplementally a copy of any omitted schedule to the Commission upon request.

8. *Escrow agreements*—Any escrow agreement or similar arrangement which has been executed in connection with the Regulation A offering.

9. *Letter re change in certifying accountant*—A letter from the issuer's former independent accountant regarding its concurrence or disagreement with the statements made by the issuer in the current report concerning the resignation or dismissal as the issuer's principal accountant.

10. *Power of attorney*—If any name is signed to the offering statement pursuant to a power of attorney, signed copies of the power of attorney must be filed. Where the power of attorney is contained elsewhere in the offering statement or documents filed therewith, a reference must be made in the index to the part of the offering statement or document containing such power of attorney. In addition, if the name of any officer signing on behalf of the issuer is signed pursuant to a power of attorney, certified copies of a resolution of the issuer's board of directors authorizing such signature must also be filed. A power of attorney that is filed with the Commission must relate to a specific filing or an amendment thereto. A power of attorney that confers general authority may not be filed with the Commission.

11. *Consents*—

(a) Experts: The written consent of (i) any accountant, counsel, engineer, geologist, appraiser or any persons whose profession gives authority to a statement made by them and who is named in the offering statement as having prepared or certified any part of the document or is named as having prepared or certified a report or evaluation whether or not for use in connection with the offering statement; (ii) the expert that authored any portion of a report quoted or summarized as such in the offering statement, expressly stating their consent to the use of such quotation or summary; (iii) any persons who are referenced as having reviewed or passed upon any information in the offering statement, and that such information is being included on the basis of their authority or in reliance upon their status as experts.

(b) All written consents must be dated and signed.

12. *Opinion re legality*—An opinion of counsel as to the legality of the securities covered by the Offering Statement, indicating whether they will when sold, be legally issued, fully paid and non-assessable, and if debt securities, whether they will be binding obligations of the issuer.

13. *''Testing the waters'' materials*—Any written communication or broadcast script used under the authorization of Rule 255. Such materials need not be filed if they are substantively the same as materials previously filed with the offering statement.

14. *Appointment of agent for service of process*—A Canadian issuer must file Form F–X.

15. *Additional exhibits*—

(a) Any non-public, draft offering statement previously submitted pursuant to Rule 252(d) and any related, non-public correspondence submitted by or on behalf of the issuer.

(b) Any additional exhibits which the issuer may wish to file, which must be so marked as to indicate clearly the subject matters to which they refer.

SIGNATURES

Pursuant to the requirements of Regulation A, the issuer certifies that it has reasonable grounds to believe that it meets all of the requirements for filing on Form 1–A and has duly caused this offering statement to be signed on its behalf by the undersigned, thereunto duly authorized, in the City of _____, State of _____, on _____ *(date).*

(Exact name of issuer as specified in its charter)_____ _____

By (Signature and Title)_____

This offering statement has been signed by the following persons in the capacities and on the dates indicated.

(Signature)_____ _____

(Title)_____ _____

(Date)_____ _____

Instructions to Signatures:

1. The offering statement must be signed by the issuer, its principal executive officer, principal financial officer, principal accounting officer, and a majority of the members of its board of directors or other governing body. If a signature is by a person on behalf of any other person, evidence of authority to sign must be filed with the offering statement, except where an executive officer signs on behalf of the issuer.

2. The offering statement must be signed using a typed signature. Each signatory to the filing must also manually sign a signature page or other document authenticating, acknowledging or otherwise adopting his or her signature that appears in the filing. Such document must be executed before or at the time the filing is made and must be retained by the issuer for a period of five years. Upon request, the issuer must furnish to the Commission or its staff a copy of any or all documents retained pursuant to this section.

3. The name and title of each person signing the offering statement must be typed or printed beneath the signature.

Note: The text of Form 1–A will not appear in the Code of Federal Regulations.

■ 11. Revise § 239.91 to read as follows:

§ 239.91 Form 1–K.

This form shall be used for filing annual reports under Regulation A (§§ 230.251–230.263 of this chapter).

■ 12. Add Form 1–K (referenced in § 239.91) to read as follows:

UNITED STATES

SECURITIES AND EXCHANGE COMMISSION

Washington, DC 20549

FORM 1–K

GENERAL INSTRUCTIONS

A. Rules as to Use of Form 1–K.

(1) This Form shall be used for annual reports pursuant to Rule 257(b)(1) of Regulation A (§§ 230.251–230.263).

(2) Annual reports on this Form shall be filed within 120 calendar days after the end of the fiscal year covered by the report.

(3) This Form also shall be used for special financial reports filed pursuant to Rule 257(b)(2)(i)(A) of Regulation A. Such special financial reports shall be filed and signed in the manner set forth in this Form, but otherwise need only provide Part I and the financial statements required by Rule 257(b)(2)(i)(A). Special financial reports filed using this Form shall be filed within 120 calendar days after the qualification date of the offering statement.

B. Preparation of Report.

(1) Regulation A contains certain general requirements that are applicable to reports on any form, including amendments to reports. These general requirements should be carefully read and observed in the preparation and filing of reports on this Form.

(2) This Form is not to be used as a blank form to be filled in, but only as a guide in the preparation of the report.

(3) Except where information is required to be given for the fiscal year or as of a specified date, it shall be given as of the latest date reasonably practicable.

(4) References in this Form to the items in Form 1–A are to the items set forth in Part II and Part III of Form 1–A, not Part I.

(5) In addition to the information expressly required to be included in this Form, there shall be added such further material information, if any, as may be necessary to make the required statements, in light of the circumstances under which they are made, not misleading.

C. Signature and Filing of Report.

(1) The report must be filed with the Commission in electronic format by means of the Commission's Electronic Data Gathering, Analysis and Retrieval System (''EDGAR'') in accordance with the EDGAR rules set forth in Regulation S–T (17 CFR part 232).

(2) The report must be signed by the issuer, its principal executive officer, principal financial officer, principal accounting officer, and at least a majority of the members of its board of directors or other governing body. If a signature is by a person on behalf of any other person, evidence of authority to sign must be filed with the report, except where an executive officer signs on behalf of the issuer.

(3) The report must be signed using a typed signature. Each signatory to the filing must also manually sign a signature page or other document authenticating, acknowledging or otherwise adopting his or her signature that appears in the filing. Such document must be executed before or at the time the filing is made and must be retained by the issuer for a period of five years. Upon request, the issuer must furnish to the Commission or its staff a copy of any or all documents retained pursuant to this paragraph.

D. Incorporation by Reference and Cross-Referencing.

(1) An issuer may incorporate by reference to other documents previously submitted or filed on EDGAR. Cross-referencing within the report is also encouraged to avoid repetition of information. For example, you may respond to an item of this Form by providing a cross-reference to the location of the information in the financial statements, instead of repeating such information. Descriptions of where the information incorporated by reference or cross-referenced can be found must be specific and must clearly identify the relevant document and portion thereof where such information can be found. For exhibits incorporated by reference, this description must be noted in the exhibits index for each relevant exhibit. All descriptions of where information incorporated by reference can be found must be accompanied by a separate hyperlink to the incorporated document on EDGAR. A hyperlink need not remain active after the filing of the report, except that amendments to the report must update any hyperlinks referred to in the amendment that are inactive.

(2) Reference may not be made to any document if the portion of such document containing the pertinent information includes an incorporation by reference to another document. Incorporation by reference to documents not available on EDGAR is not permitted. Information shall not be incorporated by reference or cross-referenced in any case where such incorporation would render the statement or report incomplete, unclear, or confusing. Incorporating information

into the financial statements from elsewhere is not permitted.

(3) If any substantive modification has occurred in the text of any document incorporated by reference since such document was filed, the issuer must file with the reference a statement containing the text and date of such modification.

PART I

NOTIFICATION

The following information must be provided in the XML-based portion of Form 1–K available through the EDGAR portal and must be completed or updated before uploading each offering statement or amendment thereto. The format of Part I shown below may differ from the electronic version available on EDGAR. The electronic version of Part I will allow issuers to attach Part II for filing by means of EDGAR. All items must be addressed, unless otherwise indicated.

* * * * *

This Form 1–K is to provide an ☐ Annual Report *OR* ☐ Special Financial Report for the fiscal year ended_____

Exact name of issuer as specified in the issuer's charter:_____

Jurisdiction of incorporation/organization:_____

I.R.S. Employer Identification Number:_____

Address of Principal Executive Offices:

_____

Phone: (__) _____

Title of each class of securities issued pursuant to Regulation A: _____

_____

Summary Information Regarding Prior Offerings and Proceeds

The following information must be provided for any Regulation A offering that has terminated or completed prior to the filing of this Form 1–K, unless such information has been previously reported in a manner permissible under Rule 257. If such information has been previously reported, check this box ☐and leave the rest of Part I blank.

Commission File Number of the offering statement:_____

Date of qualification of the offering statement:_____

Date of commencement of the offering:_____

Amount of securities qualified to be sold in the offering:_____

Amount of securities sold in the offering:_____

Price per security: $_____

The portion of aggregate sales attributable to securities sold on behalf of the issuer: $_____

The portion of aggregate sales attributable to securities sold on behalf of selling securityholders: $_____

Fees in connection with this offering and names of service providers:

	Name of Service Provider	*Fees*
Underwriters:	_____	$_____
Sales Commissions:	_____	$_____
Finders' Fees:	_____	$_____
Audit:	_____	$_____
Legal:	_____	$_____
Promoters:	_____	$_____
Blue Sky Compliance:	_____	$_____

CRD Number of any broker or dealer listed:_____

Net proceeds to the issuer: $_____

Clarification of responses (if necessary):_____

PART II

INFORMATION TO BE INCLUDED IN REPORT

Item 1. Business

Set forth the information required by Item 7 of Form 1–A.

Item 2. Management's Discussion and Analysis of Financial Condition and Results of Operations

Set forth the information required by Item 9(a), (b) and (d) of Form 1–A for the most recent two completed fiscal years.

Item 3. Directors and Officers

Set forth the information required by Items 10 and 11 of Form 1–A.

Item 4. Security Ownership of Management and Certain Securityholders

Set forth the information required by Item 12 of Form 1–A.

Item 5. Interest of Management and Others in Certain Transactions

Set forth the information required by Item 13 of Form 1–A.

Item 6. Other Information

Set forth any information required to be disclosed in a report on Form 1–U during the last six months of the fiscal year covered by this Form 1–K, but not reported, whether or not otherwise required by this Form 1–K. If disclosure of such information is made under this item, it need not be repeated in a report on Form 1–U that would otherwise be required to be filed with respect to such information or in a subsequent report on Form 1–U.

Item 7. Financial Statements

(a) The appropriate audited financial statements set forth below of the issuer, or the issuer and its predecessors or any businesses to which the issuer is a successor must be filed as part of the Form 1–K.

(b) Unless the issuer is a Canadian company, financial statements must be prepared in accordance with generally accepted accounting principles in the United States (US GAAP). If the issuer is a Canadian company, such financial statements must be prepared in accordance with either US GAAP or International Financial Reporting Standards (IFRS) as issued by the International Accounting Standards Board (IASB). If the financial statements comply with IFRS, such compliance must be explicitly and unreservedly stated in the notes to the financial statements and the auditor's report must include an opinion on whether the financial statements comply with IFRS as issued by the IASB.

(c) The audit of the financial statements must be conducted in accordance with either U.S. Generally Accepted Auditing Standards or the standards of the Public Company Accounting Oversight Board (United States) and the report and qualifications of the independent accountant shall comply with the requirements of Article 2 of Regulation S–X. Accounting firms conducting audits for the financial statements may, but need not, be registered with the Public Company Accounting Oversight Board.

(d) *Balance Sheet.* There shall be filed an audited consolidated balance sheet as of the end of each of the most recent two fiscal years.

(e) *Statements of income, cash flows, and changes in stockholders' equity.* File audited consolidated statements of income, cash flows, and changes in stockholders' equity for each of the two fiscal years preceding the date of the most recent balance sheet being filed or such shorter period as the issuer has been in existence.

(f) *Oil and Gas Producing Activities.* Issuers engaged in oil and gas producing activities must follow the financial accounting and reporting standards specified in Rule 4–10 of Regulation S–X.

(g) *Financial Statements of Other Entities.* The circumstances described below may require you to file financial statements of other entities. The financial statements of other entities must be presented for the same periods as the issuer's financial statements described above in paragraphs (d) and (e) unless a shorter period is specified by the rules below.

(1) *Financial Statements of Guarantors and Issuers of Guaranteed Securities.* Financial statements of a subsidiary that issues securities guaranteed by the parent or guarantees securities issued by the parent must be presented as required by Rule 3–10 of Regulation S–X.

(2) *Financial Statements of Affiliates Whose Securities Collateralize an Issuance.* Financial statements for an issuer's affiliates whose securities constitute a substantial portion of the collateral for any class of securities being offered must be presented as required by Rule 3–16 of Regulation S–X.

Item 8. Exhibits

(a) An exhibits index must be presented immediately preceding the first signature page of the report.

(b) File, as exhibits to this Form, the exhibits required by Form 1–A, except for the exhibits required by paragraphs 1, 12, and 13 of Item 17.

SIGNATURES

Pursuant to the requirements of Regulation A, the issuer has duly caused this report to be signed on its behalf by the undersigned, thereunto duly authorized.

(Exact name of issuer as specified in its charter) _____

_____

By (Signature and Title) _____

Date _____

Pursuant to the requirements of Regulation A, this report has been signed below by the following persons on behalf of the issuer and in the capacities and on the dates indicated.

By (Signature and Title) _____

Date _____

By (Signature and Title) _____

Date _____

Note: The text of Form 1–K will not appear in the Code of Federal Regulations.

■ 13. Add § 239.92 to read as follows:

§ 239.92 Form 1–SA.

This form shall be used for filing semiannual reports under Regulation A (§§ 230.251–230.263 of this chapter).

■ 14. Add Form 1–SA (referenced in § 239.92) to read as follows:

UNITED STATES SECURITIES AND EXCHANGE COMMISSION

Washington, DC 20549

FORM 1–SA

[ ] SEMIANNUAL REPORT PURSUANT TO REGULATION A or

[ ] SPECIAL FINANCIAL REPORT PURSUANT TO REGULATION A

For the fiscal semiannual period ended ____

_____

(Exact name of issuer as specified in its charter)

State or other jurisdiction of incorporation or organization _____

(I.R.S. Employer Identification No.) _____

(Full mailing address of principal executive offices) _____

(Issuer's telephone number, including area code) _____

GENERAL INSTRUCTIONS

A. Rules as to Use of Form 1–SA.

(1) This Form shall be used for semiannual reports pursuant to Rule 257(b)(3) of Regulation A (§§ 230.251–230.263).

(2) Semiannual reports on this Form shall be filed within 90 calendar days after the end of the semiannual period covered by the report.

(3) This Form also shall be used for special financial reports filed pursuant to Rule 257(b)(2)(i)(B) of Regulation A. Such special financial reports shall be filed and signed in the manner set forth in this Form, but otherwise need only provide the cover page and financial statements required by Rule 257(b)(2)(i)(B). Special financial reports filed using this Form shall be filed within 90 calendar days after the qualification date of the offering statement.

B. Preparation of Report.

(1) Regulation A contains certain general requirements that are applicable to reports on any form, including amendments to reports. These general requirements should be carefully read and observed in the preparation and filing of reports on this Form.

(2) This Form is not to be used as a blank form to be filled in, but only as a guide in the preparation of the report.

(3) In addition to the information expressly required to be included in this Form, there shall be added such further material information, if any, as may be necessary to make the required statements, in light of the circumstances under which they are made, not misleading.

C. Signature and Filing of Report.

(1) The report must be filed with the Commission in electronic format by means of the Commission's Electronic Data Gathering, Analysis and Retrieval System (''EDGAR'') in accordance with the EDGAR rules set forth in Regulation S–T (17 CFR part 232).

(2) The report must be signed by the issuer, its principal executive officer, principal financial officer and principal accounting officer. If a signature is by a person on behalf of any other person, evidence of authority to sign must be filed with the report, except where an executive officer signs on behalf of the issuer.

(3) The report must be signed using a typed signature. Each signatory to the filing must also manually sign a signature page or other document authenticating, acknowledging or otherwise adopting his or her signature that appears in the filing. Such document must be executed before or at the time the filing is made and must be retained by the issuer for a period of five years. Upon request, the issuer must furnish to the Commission or its staff a copy of any or all documents retained pursuant to this paragraph.

D. Incorporation by Reference and Cross-Referencing.

(1) An issuer may incorporate by reference to other documents previously submitted or filed on EDGAR. Cross-referencing within the report is also encouraged to avoid repetition of information. For example, you may respond to an item of this Form by providing a cross-reference to the location of the information in the financial statements, instead of repeating such information. Descriptions of where the information incorporated by reference or cross-referenced can be found must be specific and must clearly identify the relevant document and portion thereof where such information can be found. For exhibits incorporated by reference, this description must be noted in the exhibits index for each relevant exhibit. All such descriptions of where information incorporated by reference can be found must be accompanied by

a separate hyperlink to the incorporated document on EDGAR. A hyperlink need not remain active after the filing of the report, except that amendments to the report must update any hyperlinks referred to in the amendment that are inactive.

(2) Reference may not be made to any document if the portion of such document containing the pertinent information includes an incorporation by reference to another document. Incorporation by reference to documents not available on EDGAR is not permitted. Information shall not be incorporated by reference or cross-referenced in any case where such incorporation would render the statement or report incomplete, unclear, or confusing. Incorporating information into the financial statements from elsewhere is not permitted.

(3) If any substantive modification has occurred in the text of any document incorporated by reference since such document was filed, the issuer must file with the reference a statement containing the text and date of such modification.

INFORMATION TO BE INCLUDED IN REPORT

Item 1. Management's Discussion and Analysis of Financial Condition and Results of Operations

Set forth the information required by Item 9(a), (b), and (d) of Form 1–A for the interim period for which financial statements are required by Item 3 below.

Item 2. Other Information

Set forth any information required to be disclosed in a report on Form 1–U during the semiannual period covered by this Form 1–SA, but not reported, whether or not otherwise required by this Form 1–SA. If disclosure of such information is made under this item, it need not be repeated in a report on Form 1–U that would otherwise be required to be filed with respect to such information or in a subsequent report on Form 1–U.

Item 3. Financial Statements

The appropriate financial statements set forth below of the issuer, or the issuer and its predecessors or any businesses to which the issuer is a successor must be filed as part of the Form 1–SA.

Unless the issuer is a Canadian company, financial statements must be prepared on a consolidated basis in accordance with generally accepted accounting principles in the United States (US GAAP). If the issuer is a Canadian company, such financial statements must be prepared in accordance with either US GAAP or International Financial Reporting Standards (IFRS) as issued by the International Accounting Standards Board (IASB). If the financial statements comply with IFRS as issued by the IASB, such compliance must be explicitly and unreservedly stated in the notes to the financial statements.

The financial statements included pursuant to this item may be condensed, unaudited, and are not required to be reviewed. For additional guidance on presentation of the financial statements refer to Rule 8–03(a) of Regulation S–X. The financial statements must include the following:

(a) An interim consolidated balance sheet as of the end of the six month period covered by this report and a balance sheet as of the end of the preceding fiscal year. An interim balance sheet as of the end of the corresponding six month interim period of the preceding fiscal year need not be provided unless necessary for an understanding of the impact of seasonal fluctuations on the issuer's financial condition.

(b) Interim consolidated statements of income must be provided for the six month interim period covered by this report and for the corresponding period of the preceding fiscal year. Income statements must be accompanied by a statement that in the opinion of management all adjustments necessary in order to make the interim financial statements not misleading have been included.

(c) Interim statements of cash flows must be provided for the six month interim period covered by this report and for the corresponding period of the preceding fiscal year.

(d) Footnote and other disclosures should be provided as needed for fair presentation and to ensure that the financial statements are not misleading. Refer to Rule 8–03(b) of Regulation S–X for examples of disclosures that may be needed.

(e) *Financial Statements of Guarantors and Issuers of Guaranteed Securities.* Financial statements of a subsidiary that issues securities guaranteed by the parent or guarantees securities issued by the parent must be presented as required by Rule 3–10 of Regulation S–X, except that the periods presented are those required by this item and the financial statements need not be audited.

Item 4. Exhibits

(a) An exhibits index must be presented immediately preceding the first signature page of the report.

(b) File, as exhibits to this Form, the exhibits required by Form 1–A, except for the exhibits required by paragraphs 1, 12, and 13 of Item 17.

SIGNATURES

Pursuant to the requirements of Regulation A, the issuer has duly caused this report to be signed on its behalf by the undersigned, thereunto duly authorized.

(Exact name of issuer as specified in its charter) _____

By (Signature and Title) _____

Date _____

Pursuant to the requirements of Regulation A, this report has been signed below by the following persons on behalf of the issuer and in the capacities and on the dates indicated.

By (Signature and Title) _____

Date _____

By (Signature and Title) _____

Date _____

Note: The text of Form 1–SA will not appear in the Code of Federal Regulations.

■ 15. Add § 239.93 to read as follows:

§ 239.93 Form 1–U.

This form shall be used for filing current reports under Regulation A (§§ 230.251–230.263 of this chapter).

■ 16. Add Form 1–U (referenced in § 239.92) to read as follows:

UNITED STATES SECURITIES AND EXCHANGE COMMISSION

Washington, D.C. 20549

FORM 1–U

CURRENT REPORT PURSUANT TO REGULATION A

Date of Report (Date of earliest event reported) _____

(Exact name of issuer as specified in its charter) _____

State or other jurisdiction of incorporation or organization _____

(I.R.S. Employer Identification No.) _____

(Full mailing address of principal executive offices) _____

(Issuer's telephone number, including area code) _____

Title of each class of securities issued pursuant to Regulation A: _____

_____

GENERAL INSTRUCTIONS

A. Rules as to Use of Form 1–U.

(1) This Form shall be used for current reports pursuant to Rule 257(b)(4) of Regulation A (§§ 230.251–230.263).

(2) A report on this Form is required to be filed, as applicable, upon the occurrence of any one or more of the events specified in Items 1—9 of this Form. Unless otherwise specified, a

report is to be filed within four business days after occurrence of the event. If the event occurs on a Saturday, Sunday, or holiday on which the Commission is not open for business, then the four business day period shall begin to run on, and include, the first business day thereafter.

(3) If the issuer previously has provided substantially the same information as required by this Form in a report required by Rule 257(b) of Regulation A, the issuer need not make an additional report of the information on this Form. To the extent that an item calls for disclosure of developments concerning a previously reported event or transaction, any information required in the new report or amendment about the previously reported event or transaction may be provided by incorporation by reference to the previously filed report, if a hyperlink to such report as filed with the Commission is included.

(4) Copies of agreements, amendments or other documents or instruments are not required to be filed as exhibits to the Form 1–U unless specifically required by the applicable item. This instruction does not affect the requirement to otherwise file such agreements, amendments or other documents or instruments, including as exhibits to offering statements and periodic reports pursuant to the requirements of Regulation A.

B. Preparation of Report.

(1) Regulation A contains certain general requirements which are applicable to reports on any form, including amendments to reports. These general requirements should be carefully read and observed in the preparation and filing of reports on this Form.

(2) This Form is not to be used as a blank form to be filled in, but only as a guide in the preparation of the report. Nevertheless, the report shall contain the number and caption of each applicable item, but the text of such item may be omitted. All items that are not required to be answered in a particular report may be omitted and no reference thereto need be made in the report. All instructions should also be omitted.

(3) In addition to the information expressly required to be included in this Form, there shall be added such further material information, if any, as may be necessary to make the required statements, in light of the circumstances under which they are made, not misleading.

C. Signature and Filing of Report.

(1) The report must be filed with the Commission in electronic format by means of the Commission's Electronic Data Gathering, Analysis and Retrieval System (''EDGAR'') in accordance with the EDGAR rules set forth in Regulation S–T (17 CFR part 232).

(2) The report must be signed by an officer duly authorized to sign on behalf of the issuer. The report must be signed using a typed signature. The signatory to the filing must also manually sign a signature page or other document authenticating, acknowledging or otherwise adopting his or her signature that appears in the filing. Such document must be executed before or at the time the filing is made and must be retained by the issuer for a period of five years. Upon request, the issuer must furnish to the Commission or its staff a copy of any or all documents retained pursuant to this paragraph.

D. Incorporation by Reference and Cross-Referencing.

(1) An issuer may incorporate by reference to other documents previously submitted or filed on EDGAR. Cross-referencing within the report is also encouraged to avoid repetition of information. For example, you may respond to an item of this Form by providing a cross-reference to the location of the information in another item, instead of repeating such information. Descriptions of where the information incorporated by reference or cross-referenced can be found must be specific and must clearly identify the relevant document and portion thereof where such information can be found. For exhibits incorporated by reference, this description must be noted in the exhibits index for each relevant exhibit. All such descriptions of where information incorporated by reference can be found must be accompanied by a separate hyperlink to the incorporated document on EDGAR. A hyperlink need not remain active after the filing of the report, except that amendments to the report must update any hyperlinks referred to in the amendment that are inactive.

(2) Reference may not be made to any document if the portion of such document containing the pertinent information includes an incorporation by reference to another document. Incorporation by reference to documents not available on EDGAR is not permitted. Information shall not be incorporated by reference or cross-referenced in any case where such incorporation would render the statement or report incomplete, unclear, or confusing. Incorporating information into any financial statements from elsewhere is not permitted.

(3) If any substantive modification has occurred in the text of any document incorporated by reference since such document was filed, the issuer must file with the reference a statement containing the text and date of such modification.

INFORMATION TO BE INCLUDED IN THE REPORT

Item 1. Fundamental Changes

(a) If the issuer has entered into or terminated a material definitive agreement that has resulted in or would reasonably be expected to result in a fundamental change to the nature of its business or plan of operations, disclose the following information to the extent applicable:

(1) the date on which the agreement was entered into, amended, or terminated, the identity of the parties to the agreement or amendment, and a brief description of any material relationship between the issuer or its affiliates and any of the parties (other than the relationship created by the material definitive agreement or amendment);

(2) a brief description of the material terms and conditions of the agreement;

(3) a brief description of the material circumstances surrounding the termination; and

(4) any material early termination penalties incurred by the issuer due to a termination.

(b) For purposes of this item, a material definitive agreement means an agreement that provides for obligations that are material to and enforceable against the issuer, or rights that are material to the issuer and enforceable by the issuer against one or more other parties to the agreement, in each case whether or not subject to conditions.

(c) File any material definitive agreement disclosed pursuant to this item as an exhibit to the report on this Form.

Instructions to Item 1:

1. A material definitive agreement that is not made in the ordinary course of business is not necessarily required to be disclosed under this item if it does not result in, and would not reasonably be expected to result in, a fundamental change to the nature of the issuer's business or plan of operations.

2. Without limiting the generality of the foregoing and solely for the purposes of this Item 1, a material definitive agreement is deemed to result in a fundamental change if it involves any of the following:

a. An acquisition transaction for which the purchase price, as defined by U.S. GAAP or IFRS, exceeds fifty-percent of the total consolidated assets of the issuer as of the end of the most recently completed fiscal year. If the acquirer transferred assets to the acquiree than the carrying value of those assets should be excluded from the purchase price;

b. A merger, consolidation, acquisition or similar transaction that requires approval by the issuer's securityholders; or

c. Any contract upon which the issuer's business is substantially dependent, as in the case of continuing contracts to sell the major part of the issuer's products or services or to purchase the major part of the issuer's requirements of goods, services or raw materials or any franchise or license or other agreement to use a patent, formula, trade secret, process or trade name upon which the issuer's business is substantially dependent.

3. An issuer must provide disclosure under this item if the issuer succeeds as a party to the agreement or amendment to the agreement by assumption or assignment (other than in connection with a merger or acquisition or similar transaction that is otherwise reported pursuant to this item).

4. No disclosure under this item is required regarding the termination of a material definitive agreement if:

a. The agreement terminated on its stated termination date, or as a result of all parties completing their obligations under such agreement.

b. Only negotiations or discussions regarding termination of a material definitive agreement are being conducted and the agreement has not been terminated.

c. The issuer believes in good faith that the material definitive agreement has not been terminated, unless the issuer has received a notice of termination pursuant to the terms of agreement.

Item 2. Bankruptcy or Receivership

(a) If a receiver, fiscal agent or similar officer has been appointed for an issuer or its parent, in a proceeding under the U.S. Bankruptcy Code or in any other proceeding under state, federal, or Canadian laws, in which a court or governmental authority has assumed jurisdiction over substantially all of the assets or business of the issuer or its parent, or if such jurisdiction has been assumed by leaving the existing directors and officers in possession but subject to the supervision and orders of a court or governmental authority, disclose the following information:

(1) the name or other identification of the proceeding;

(2) the identity of the court or governmental authority;

(3) the date that jurisdiction was assumed; and

(4) the identity of the receiver, fiscal agent or similar officer and the date of his or her appointment.

(b) If an order confirming a plan of reorganization, arrangement or liquidation has been entered by a court or governmental authority having supervision or jurisdiction over substantially all of the assets or business of the issuer or its parent, disclose the following:

(1) the identity of the court or governmental authority;

(2) the date that the order confirming the plan was entered by the court or governmental authority;

(3) a summary of the material features of the plan;

(4) the number of shares or other units of the issuer or its parent issued and outstanding, the number reserved for future issuance in respect of claims and interests filed and allowed under the plan, and the aggregate total of such numbers; and

(5) information as to the assets and liabilities of the issuer or its parent as of the date that the order confirming the plan was entered, or a date as close thereto as practicable.

Instruction to Item 2:

The information called for in paragraph (b)(5) of this item may be presented in the form in which it was furnished to the court or governmental authority.

Item 3. Material Modification to Rights of Securityholders

(a) If the constituent instruments defining the rights of the holders of any class of securities of the issuer that were issued pursuant to Regulation A have been materially modified, disclose the date of the modification, the title of the class of securities involved and briefly describe the general effect of such modification upon the rights of holders of such securities.

(b) If the rights or benefits evidenced by any class of securities issued pursuant to Regulation A have been materially limited or qualified by the issuance or modification of any other class of securities by the issuer, briefly disclose the date of the issuance or modification, the general effect of the issuance or modification of such other class of securities upon the rights or benefits of the holders of the securities issued pursuant to Regulation A.

Instruction to Item 3:

Working capital restrictions and other limitations upon the payment of dividends must be reported pursuant to this item.

Item 4. Changes in Issuer's Certifying Accountant

(a) If an independent accountant who was previously engaged as the principal accountant to audit the issuer's financial statements, or an independent accountant upon whom the principal accountant expressed reliance in its report regarding a significant subsidiary, resigns (or indicates that it declines to stand for re-appointment after completion of the current audit) or is dismissed, disclose the information that would be required under Item 304(a)(1) of Regulation S–K (17 CFR 229.304(a)(1)), including compliance with Item 304(a)(3) of Regulation S–K (17 CFR 229.304(a)(3)) if the issuer were a ''registrant.''

(b) If a new independent accountant has been engaged as either the principal accountant to audit the issuer's financial statements or as an independent accountant on whom the principal accountant is expected to express reliance in its report regarding a significant subsidiary, the issuer must disclose the information that would be required by Item 304(a)(2) of Regulation S–K (17 CFR 229.304(a)(2)) if the issuer were a ''registrant.''

Instructions to Item 4:

1. Information under this Item 4 is only required if the issuer's most recent qualified offering statement on Form 1–A or report on Form 1–K, whichever is most recent, contains audited financial statements.

2. The resignation or dismissal of an independent accountant, or its refusal to stand for re-appointment, is a reportable event separate from the engagement of a new independent accountant. On some occasions, two reports on Form 1–U are required for a single change in accountants, the first on the resignation (or refusal to stand for re-appointment) or dismissal of the former accountant and the second when the new accountant is engaged. Information required in the second Form 1–U filing in such situations need not be provided to the extent that it has been reported previously in the first Form 1–U filing.

Item 5. Non-reliance on Previously Issued Financial Statements or a Related Audit Report or Completed Interim Review

(a) If the issuer's board of directors, a committee of the board of directors or the officer or officers of the issuer authorized to take such action if board action is not required, concludes that any previously issued financial

statements, covering one or more years or interim periods for which the issuer is required to provide financial statements under Regulation A, including Form 1–A, should no longer be relied upon because of an error in such financial statements as addressed in FASB Accounting Standards Codification Topic 250 or IAS 8, as may be modified, supplemented or succeeded, disclose the following information:

(1) the date of the conclusion regarding the non-reliance and an identification of the financial statements and years or periods covered that should no longer be relied upon;

(2) a brief description of the facts underlying the conclusion to the extent known to the issuer at the time of filing; and

(3) a statement of whether the audit committee, or the board of directors in the absence of an audit committee, or authorized officer or officers, discussed with the issuer's independent accountant the matters disclosed in the filing pursuant to this paragraph (a).

(b) If the issuer is advised by, or receives notice from, its independent accountant that disclosure should be made or action should be taken to prevent future reliance on a previously issued audit report or completed interim review related to previously issued financial statements, disclose the following information:

(1) the date on which the issuer was so advised or notified;

(2) identification of the financial statements that should no longer be relied upon;

(3) a brief description of the information provided by the accountant; and

(4) a statement of whether the audit committee, or the board of directors in the absence of an audit committee, or authorized officer or officers, discussed with the independent accountant the matters disclosed in the filing pursuant to paragraph (b) of this item.

(c) If the issuer receives advisement or notice from its independent accountant requiring disclosure under paragraph (b) of this item, the issuer must:

(1) provide the independent accountant with a copy of the disclosures the issuer is making in response to this item and the independent accountant shall receive a copy no later than the day that the disclosures are filed with the Commission;

(2) request the independent accountant to furnish to the issuer as promptly as possible a letter addressed to the Commission stating whether the independent accountant agrees with the statements made by the issuer in response to this item and, if not, stating the respects in which it does not agree; and

(3) amend the issuer's previously filed Form 1–U by filing the independent accountant's letter as an exhibit to the filed Form 1–U no later than two business days after the issuer's receipt of the letter.

Item 6. Changes in Control of Issuer

(a) If, to the knowledge of the issuer's board of directors, a committee of the board of directors, governing body similar to a board of directors, or authorized officer or officers of the issuer, a change in control of the issuer has occurred, furnish the following information:

(1) the identity of the persons who acquired such control;

(2) the date and a description of the transactions which resulted in the change in control;

(3) the basis of the control, including the percentage of voting securities of the issuer now beneficially owned directly or indirectly by the persons who acquired control;

(4) the amount of the consideration used by such persons;

(5) the sources of funds used by the persons, unless all or any part of the consideration used is a loan made in the ordinary course of business by a bank as defined by Section 3(a)(6) of the Securities Exchange Act of 1934.

(6) the identity of the persons from whom control was assumed; and

(7) any arrangements or understandings among members of both the former and new control groups and their associates with respect to election of directors or other matters.

(b) Describe any arrangements, known to the issuer, including any pledge by any person of securities of the issuer or any of its parents, the operation of which may at a subsequent date result in a change in control of the issuer. It is not necessary to describe ordinary default provisions contained in the charter, trust indentures, or other governing instruments relating to securities of the issuer in response to this paragraph.

Item 7. Departure of Certain Officers

If the issuer's principal executive officer, principal financial officer, principal accounting officer, or any person performing similar functions, retires, resigns or is terminated from that position, disclose the fact that the event has occurred and the date of the event.

Instruction to Item 7:

The disclosure requirements of this item do not apply to an issuer that is a wholly-owned subsidiary of an issuer with a class of securities registered under Section 12 of the Exchange Act (15 U.S.C. 78l), or that is required to file reports under Section 15(d) of the Exchange Act (15 U.S.C. 78o(d)) or under Regulation A.

Item 8. Certain Unregistered Sales of Equity Securities

(a) If the issuer sells equity securities in a transaction that is not registered under the Securities Act or qualified under Regulation A, furnish the information set forth in Item 6 of Part I of Form 1–A. For purposes of determining the required filing date for the Form 1–U under this item, the issuer has no obligation to disclose information under this item until the issuer enters into an agreement enforceable against the issuer, whether or not subject to conditions, under which the equity securities are to be sold. If there is no such agreement, the issuer must provide the disclosure within four business days after the occurrence of the closing or settlement of the transaction or arrangement under which the equity securities are to be sold.

(b) No report need be filed if the equity securities sold, in the aggregate since its last report filed under this item or its last periodic report containing such disclosure, whichever is more recent, constitute less than 10% of the number of shares outstanding of the class of equity securities sold.

Instructions to Item 8:

1. For purposes of this item, ''the number of shares outstanding'' refers to the actual number of shares of equity securities of the class outstanding and does not include outstanding securities convertible into or exchangeable for such equity securities.

2. It is not necessary to follow the format of Item 6 of Part I of Form 1–A when providing the information required by this item.

Item 9. Other Events

The issuer may, at its option, disclose under this item any events or information, the disclosure of which is not otherwise called for by this Form, that the issuer deems of importance to securityholders.

SIGNATURES

Pursuant to the requirements of Regulation A, the issuer has duly caused this report to be signed on its behalf by the undersigned, thereunto duly authorized.

(Exact name of issuer as specified in its charter) _____

By (Signature and Title) _____

Date_____

Note: The text of Form 1–U will not appear in the Code of Federal Regulations.

■ 17. Add § 239.94 to read as follows:

§ 239.94 Form 1–Z.

This form shall be used to file an exit report under Regulation A (§§ 230.251–230.263 of this chapter).

■ 18. Add Form 1–Z (referenced in § 239.94) to read as follows:

UNITED STATES SECURITIES AND EXCHANGE COMMISSION

Washington, DC 20549

FORM 1–Z

EXIT REPORT UNDER REGULATION A

GENERAL INSTRUCTIONS

(1) The following information must be provided in the XML-based Form 1–Z available through the EDGAR portal. The format shown below may differ from the electronic version available on EDGAR.

(2) An issuer filing this Form pursuant to Rule 257(a) must only complete the Preliminary Information and Part I.

(3) An issuer filing this Form to suspend its duty to file reports under Rule 257(d) must complete the Preliminary Information and Part II. Such issuer must also provide Part I if it has not previously provided the Part I information in a Form 1–K filing.

* * * * *

PRELIMINARY INFORMATION

Exact name of issuer as specified in the issuer's charter:_____

Address of Principal Executive Offices:_____

Phone: (__)

Commission File Number(s):_____

PART I

Summary Information Regarding the Offering and Proceeds

Date of qualification of the offering statement:_____

Date of commencement of the offering:_____

Amount of securities qualified to be sold in the offering:_____

Amount of securities sold in the offering:_____

Price per security: $_____

The portion of aggregate sales attributable to securities sold on behalf of the issuer:

$ _____

The portion of aggregate sales attributable to securities sold on behalf of selling securityholders:

$_____

Fees in connection with this offering and names of service providers:

	Name of Service Provider	*Fees*
Underwriters:	_____ _____	$_____ _____
Sales Commissions:	_____ _____	$_____ _____
Finders' Fees:	_____ _____	$_____ _____
Audit:	_____ _____	$_____ _____
Legal:	_____ _____	$_____ _____
Promoters:	_____ _____	$_____ _____
Blue Sky Compliance:	_____ _____	_____ _____

CRD Number of any broker or dealer listed:_____

Net proceeds to the issuer:

$_____

Clarification of responses (if necessary):_____

PART II

Certification of Suspension of Duty to File Reports

Title of each class of securities covered by this Form _____

Commission File Number(s) _____

Approximate number of holders of record as of the certification date: _____

Pursuant to the requirements of Regulation A, _____ *(Name of issuer as specified in charter)* certifies that it meets all of the conditions for termination of Regulation A reporting specified in Rule 257(d) and that there are no classes of securities other than those that are the subject of this Form 1–Z regarding which the issuer has Regulation A reporting obligations. _____ *(Name of issuer as specified in charter)* has caused this certification to be signed on its behalf by the undersigned duly authorized person.

By: _____ Date: _____

Title: _____

Instruction: This Part II of Form 1–Z is required by Rule 257(d) of Regulation A. An officer of the issuer or any other duly authorized person may sign, and must do so by typed signature. The name and title of the person signing the form must be typed or printed under the signature. The signatory to the filing must also manually sign a signature page or other document authenticating, acknowledging or otherwise adopting his or her signature that appears in the filing. Such document must be executed before or at the time the filing is made and must be retained by the issuer for a period of five years. Upon request, the issuer must furnish to the Commission or its staff a copy of any or all documents retained pursuant to this instruction.

Note: The text of Form 1–Z will not appear in the Code of Federal Regulations.

PART 240—GENERAL RULES AND REGULATIONS, SECURITIES EXCHANGE ACT OF 1934

■ 19. The authority citation for part 240 continues to read in part as follows:

Authority: 15 U.S.C. 77c, 77d, 77g, 77j, 77s, 77z–2, 77z–3, 77eee, 77ggg, 77nnn, 77sss, 77ttt, 78c, 78c–3, 78c–5, 78d, 78e, 78f, 78g, 78i, 78j, 78j–1, 78k, 78k–1, 78*l,* 78m, 78n, 78n–1, 78o, 78o–4, 78o–10, 78p, 78q, 78q–1, 78s, 78u–5, 78w, 78x, 78*ll,* 78mm, 80a–20, 80a–23, 80a–29, 80a–37, 80b–3, 80b–4, 80b–11, 7201 *et seq.;* and 8302; 7 U.S.C. 2(c)(2)(E); 12 U.S.C. 5221(e)(3); 18 U.S.C. 1350; and Pub. L. 111–203, 939A, 124 Stat. 1376, (2010), unless otherwise noted.

* * * * *

■ 20. Section 240.12g5–1 is amended by adding paragraph (a)(7) to read as follows:

§ 240.12g5–1 Definition of securities ''held of record''.

(a) * * *

(7) Other than when determining compliance with Rule 257(d)(2) of Regulation A (§ 230.257(d)(2) of this chapter), the definition of ''held of record'' shall not include securities issued in a Tier 2 offering pursuant to Regulation A by an issuer that:

(i) Is required to file reports pursuant to Rule 257(b) of Regulation A (§ 230.257(b) of this chapter);

(ii) Is current in filing annual, semiannual and special financial reports pursuant to such rule as of its most recently completed fiscal year end;

(iii) Has engaged a transfer agent registered pursuant to Section 17A(c) of the Act to perform the function of a transfer agent with respect to such securities; and

(iv) Had a public float of less than $75 million as of the last business day of its most recently completed semiannual period, computed by multiplying the aggregate worldwide number of shares of its common equity securities held by non-affiliates by the price at which such securities were last sold (or the average

bid and asked prices of such securities) in the principal market for such securities or, in the event the result of such public float calculation was zero, had annual revenues of less than $50 million as of its most recently completed fiscal year. An issuer that would be required to register a class of securities under Section 12(g) of the Act as a result of exceeding the applicable threshold in this paragraph (a)(7)(iv), may continue to exclude the relevant securities from the definition of ''held of record'' for a transition period ending on the penultimate day of the fiscal year two years after the date it became ineligible. The transition period terminates immediately upon the failure of an issuer to timely file any periodic report due pursuant to Rule 257 (§ 230.257 of this chapter) at which time the issuer must file a registration statement that registers that class of securities under the Act within 120 days.

* * * * *

■ 21. Section 240.15c2–11 is amended by revising paragraphs (a)(3) and (d)(2)(i) to read as follows:

§ 240.15c2–11 Initiation or resumption of quotations without specific information.

* * * * *

(a) * * *

(3) A copy of the issuer's most recent annual report filed pursuant to section 13 or 15(d) of the Act or pursuant to Regulation A ((§§ 230.251 through 230.263 of this chapter), or a copy of the annual statement referred to in section 12(g)(2)(G)(i) of the Act in the case of an issuer required to file reports pursuant to section 13 or 15(d) of the Act or an issuer of a security covered by section 12(g)(2)(B) or (G) of the Act, together with any semiannual, quarterly and current reports that have been filed under the provisions of the Act or Regulation A by the issuer after such annual report or annual statement; *provided, however,* that until such issuer has filed its first annual report pursuant to section 13 or 15(d) of the Act or pursuant to Regulation A, or annual statement referred to in section 12(g)(2)(G)(i) of the Act, the broker or dealer has in its records a copy of the prospectus specified by section 10(a) of the Securities Act of 1933 included in a registration statement filed by the issuer under the Securities Act of 1933, other than a registration statement on Form F–6, or a copy of the offering circular specified by Regulation A included in an offering statement filed by the issuer under Regulation A, that became effective or was qualified within the prior 16 months, or a copy of any registration statement filed by the issuer under section 12 of the Act that became effective within the prior 16 months, together with any semiannual, quarterly and current reports filed thereafter under section 13 or 15(d) of the Act or Regulation A; and *provided further,* that the broker or dealer has a reasonable basis under the circumstances for believing that the issuer is current in filing annual, semiannual, quarterly, and current reports filed pursuant to section 13 or 15(d) of the Act or Regulation A, or, in the case of an insurance company exempted from section 12(g) of the Act by reason of section 12(g)(2)(G) thereof, the annual statement referred to in section 12(g)(2)(G)(i) of the Act; or

* * * * *

(d) * * *

(2) * * *

(i) A broker-dealer shall be in compliance with the requirement to obtain current reports filed by the issuer if the broker-dealer obtains all current reports filed with the Commission by the issuer as of a date up to five business days in advance of the earlier of the date of submission of the quotation to the quotation medium and the date of submission of the information in paragraph (a) of this section pursuant to the applicable rule of the Financial Industry Regulatory Authority, Inc. or its successor organization; and

* * * * *

PART 249—FORMS, SECURITIES EXCHANGE ACT OF 1934

■ 22. The authority citation for part 249 continues to read in part as follows:

Authority: 15 U.S.C. 78a *et seq.* and 7201 *et seq.;* 12 U.S.C. 5461 *et seq.;* and 18 U.S.C. 1350, unless otherwise noted.

* * * * *

■ 23. Section 249.208 is amended by:

■ a. Revising paragraph (a); and

■ b. Adding paragraph (e).

The revision and addition read as follows:

§ 249.208a Form 8–A, for registration of certain classes of securities pursuant to section 12 (b) or (g) of the Securities Exchange Act of 1934.

(a) Subject to paragraph (b) of this section, this form may be used for registration pursuant to section 12(b) or (g) of the Securities Exchange Act of 1934 of any class of securities of any issuer which:

(1) Is required to file reports pursuant to sections 13 and 15(d) of that Act;

(2) Is concurrently qualifying a Tier 2 offering statement relating to that class of securities using the Form S–1 or Form S–11 disclosure models; or

(3) Pursuant to an order exempting the exchange on which the issuer has securities listed from registration as a national securities exchange.

* * * * *

(e) Notwithstanding the foregoing in paragraphs (c) and (d) of this section, if the form is used for registration of a class of securities being offered under Regulation A, it shall become effective:

(1) For the registration of a class of securities under Section 12(b), upon the latest of the filing of the form with the Commission, the qualification of the Regulation A offering statement or the receipt by the Commission of certification from the national securities exchange listed on the form; or

(2) For the registration of a class of securities under Section 12(g), upon the later of the filing of the form and qualification of that Regulation A offering statement.

■ 24. Amend Form 8–A (referenced in § 249.208a) by revising it to read as follows:

UNITED STATES SECURITIES AND EXCHANGE COMMISSION

Washington, D.C. 20549

FORM 8–A

FOR REGISTRATION OF CERTAIN CLASSES OF SECURITIES PURSUANT TO SECTION 12(b) OR (g) OF THE SECURITIES EXCHANGE ACT OF 1934

GENERAL INSTRUCTIONS

A. Rule as to Use of Form 8–A.

(a) Subject to paragraph (b) below, this form may be used for registration pursuant to Section 12(b) or (g) of the Securities Exchange Act of 1934 of any class of securities of any issuer which is (1) required to file reports pursuant to Section 13 or 15(d) of that Act, (2) is concurrently qualifying a Tier 2 offering statement relating to that class of securities using the Form S–1 or Form S–11 disclosure models that includes financial statements that are audited in accordance with the standards of, and by an accounting firm that is registered with, the Public Company Accounting Oversight Board (United States), or (3) pursuant to an order exempting the exchange on which the issuer has securities listed from registration as a national securities exchange.

(b) If the registrant would be required to file an annual report pursuant to Section 15(d) of the Act for its last fiscal year, except for the fact that the registration statement on this form will become effective before such report is required to be filed, an annual report for such fiscal year shall nevertheless be filed within the period specified in the appropriate annual report form.

(c) If this form is used for the registration of a class of securities under Section 12(b), it shall become effective:

(1) If a class of securities is not concurrently being registered under the Securities Act of 1933 (15 U.S.C. 77a *et seq.*) (''Securities Act''), upon the later of receipt by the Commission of certification from the national securities exchange listed on this form or the filing of the Form 8–A with the Commission; or

(2) If a class of securities is concurrently being registered under the Securities Act, upon the latest of the filing of the Form 8–A with the Commission, receipt by the Commission of certification from the national securities exchange listed on this form or effectiveness of the Securities Act registration statement relating to the class of securities.

(d) If this form is used for the registration of a class of securities under Section 12(g), it shall become effective:

(1) If a class of securities is not concurrently being registered under the Securities Act, upon the filing of the Form 8–A with the Commission; or

(2) If class of securities is concurrently being registered under the Securities Act, upon the later of the filing of the Form 8–A with the Commission or the effectiveness of the Securities Act registration statement relating to the class of securities.

(e) Notwithstanding the foregoing in paragraphs (c) and (d) of this form, if this form is used for registration of a class of securities being offered under Regulation A, it shall become effective:

(1) For the registration of a class of securities under Section 12(b), upon the latest of the filing of the Form 8–A with the Commission, the qualification of the Regulation A offering statement or the receipt by the Commission of certification from the national securities exchange listed on this form; or

(2) For the registration of a class of securities under Section 12(g), upon the later of the filing of the Form 8–A and qualification of the Regulation A offering statement.

(Note: Registration pursuant to paragraph (e) of this form is not permitted if the filing of the Form 8–A and, where applicable, the receipt by the Commission of certification from the national securities exchange listed on this form occurs more than five calendar days after the qualification of the Regulation A offering statement)

B. Application of General Rules and Regulations.

(a) The General Rules and Regulations under the Act contain certain general requirements which are applicable to registration on any form. These general requirements should be carefully read and observed in the preparation and filing of registration statements on this form.

(b) Particular attention is directed to Regulation 12B which contains general requirements regarding matters such as the kind and size of paper to be used, legibility, information to be given whenever the title of securities is required to be stated, incorporation by reference and the filing of the registration statement. The definitions contained in Rule 12b–2 should be especially noted.

C. Preparation of Registration Statement.

This form is not to be used as a blank form to be filled in, but only as a guide in the preparation of the registration statement on paper meeting the requirements of Rule 12b–12. The registration statement shall contain the item numbers and captions, but the text of the items may be omitted. The answers to the items shall be prepared in the manner specified in Rule 12b–13.

D. Signature and Filing of Registration Statement.

Eight complete copies of the registration statement, including all papers and documents filed as a part thereof (other than exhibits) shall be filed with the Commission and at least one such copy shall be filed with each exchange on which the securities are to be registered. Exhibits shall be filed with the Commission and with any exchange in accordance with the Instructions as to Exhibits. At least one copy of the registration statement filed with the Commission and one filed with each exchange shall be manually signed. Unsigned copies shall be conformed.

UNITED STATES SECURITIES AND EXCHANGE COMMISSION

Washington, D.C. 20549

FORM 8–A

FOR REGISTRATION OF CERTAIN CLASSES OF SECURITIES PURSUANT TO SECTION 12(b) OR (g) OF THE SECURITIES EXCHANGE ACT OF 1934

_____

(Exact name of registrant as specified in its charter)

_____

(State or other jurisdiction of incorporation or organization)

_____

(Address of principal executive offices)

_____

(I.R.S. Employer Identification No.)

_____

(Zip Code)

Securities to be registered pursuant to Section 12(b) of the Act:

Title of each class to be so registered

_____

_____

_____

Name of each exchange on which each class is to be registered

_____

_____

_____

If this form relates to the registration of a class of securities pursuant to Section 12(b) of the Exchange Act and is effective pursuant to General Instruction A.(c) or (e), check the following box. ☐

If this form relates to the registration of a class of securities pursuant to Section 12(g) of the Exchange Act and is effective pursuant to General Instruction A.(d) or (e), check the following box. ☐

If this form relates to the registration of a class of securities concurrently with a Regulation A offering, check the following box. ☐

Securities Act registration statement or Regulation A offering statement file number to which this form relates:_____ (if applicable)

Securities to be registered pursuant to Section 12(g) of the Act:

_____

(Title of class)

_____

(Title of class)

INFORMATION REQUIRED IN REGISTRATION STATEMENT

Item 1. Description of Registrant's Securities to be Registered.

Furnish the information required by Item 202 of Regulation S–K (§ 229.202 of this chapter), as applicable.

Instruction. If a description of the securities comparable to that required here is contained in any prior filing with the Commission, such description may be incorporated by reference to such other filing in answer to this item. If such description will be included in a form of prospectus or an offering circular subsequently filed by the registrant pursuant to Rule 424(b) under the Securities Act (§ 230.424(b) of this chapter) or Rule 253(g) of Regulation A (§ 230.253(g) of this chapter), this registration statement shall state that such prospectus or offering circular shall be deemed to be incorporated by reference into the registration statement. If the securities are to be registered on a national securities exchange and the description has not previously been filed with such exchange, copies of the description shall be filed with copies of the application filed with the exchange.

Item 2. Exhibits.

List below all exhibits filed as a part of the registration statement:

Instruction. See the instructions as to exhibits, set forth below.

SIGNATURE

Pursuant to the requirements of Section l2 of the Securities Exchange Act of 1934, the registrant has duly caused this registration statement to be signed on its behalf by the undersigned, thereto duly authorized.

(Registrant)

Date

By

*Print the name and title of the signing officer under such officer's signature.

INSTRUCTIONS AS TO EXHIBITS

If the securities to be registered on this form are to be registered on an exchange on which other securities of the registrant are registered, or are to be registered pursuant to Section 12(g) of the Act, copies of all constituent instruments defining the rights of the holders of each class of such securities, including any contracts or other documents which limit or qualify the rights of such holders, shall be filed as exhibits with each copy of the registration statement filed with the Commission or with an exchange, subject to Rule 12b–32 regarding incorporation of exhibits by reference.

Note: The text of Form 8–A will not appear in the Code of Federal Regulations.

PART 260—GENERAL RULES AND REGULATIONS, TRUST INDENTURE ACT OF 1939

■ 25. The authority citation for part 260 is revised to read as follows:

Authority: 15 U.S.C. 77c, 77ddd, 77eee, 77ggg, 77nnn, 77sss, 78*ll* (d), 80b–3, 80b–4, and 80b–11, unless otherwise noted.

■ 26. Section 260.4a–1 is revised to read as follows:

§ 260.4a–1 Exempted securities under section 304(a)(8).

The provisions of the Trust Indenture Act of 1939 shall not apply to any security that has been or will be issued otherwise than under an indenture. The same issuer may not claim this exemption within a period of twelve consecutive months for more than $50,000,000 aggregate principal amount of any securities.

By the Commission.

Dated: March 25, 2015.

Brent J. Fields,

Secretary.

[FR Doc. 2015–07305 Filed 4–17–15; 8:45 am]

BILLING CODE 8011–01–P

FEDERAL REGISTER

Vol. 80 Monday,

No. 75 April 20, 2015

Part III

Department of Labor

Employee Benefits Security Administration

29 CFR Parts 2509 and 2510

Definition of the Term ''Fiduciary''; Conflict of Interest Rule—Retirement Investment Advice; Proposed Rule

DEPARTMENT OF LABOR

Employee Benefits Security Administration

29 CFR Parts 2509 and 2510

RIN 1210–AB32

Definition of the Term ''Fiduciary''; Conflict of Interest Rule—Retirement Investment Advice

AGENCY: Employee Benefits Security Administration, Department of Labor.

ACTION: Notice of proposed rulemaking and withdrawal of previous proposed rule.

SUMMARY: This document contains a proposed regulation defining who is a ''fiduciary'' of an employee benefit plan under the Employee Retirement Income Security Act of 1974 (ERISA) as a result of giving investment advice to a plan or its participants or beneficiaries. The proposal also applies to the definition of a ''fiduciary'' of a plan (including an individual retirement account (IRA)) under section 4975 of the Internal Revenue Code of 1986 (Code). If adopted, the proposal would treat persons who provide investment advice or recommendations to an employee benefit plan, plan fiduciary, plan participant or beneficiary, IRA, or IRA owner as fiduciaries under ERISA and the Code in a wider array of advice relationships than the existing ERISA and Code regulations, which would be replaced. The proposed rule, and related exemptions, would increase consumer protection for plan sponsors, fiduciaries, participants, beneficiaries and IRA owners. This document also withdraws a prior proposed regulation published in 2010 (2010 Proposal) concerning this same subject matter. In connection with this proposal, elsewhere in this issue of the **Federal Register**, the Department is proposing new exemptions and amendments to existing exemptions from the prohibited transaction rules applicable to fiduciaries under ERISA and the Code that would allow certain broker-dealers, insurance agents and others that act as investment advice fiduciaries to continue to receive a variety of common forms of compensation that otherwise would be prohibited as conflicts of interest.

DATES: As of April 20, 2015, the proposed rule published October 22, 2010 (75 FR 65263) is withdrawn. Submit written comments on the proposed regulation on or before July 6, 2015.

ADDRESSES: To facilitate the receipt and processing of written comment letters on the proposed regulation, EBSA encourages interested persons to submit their comments electronically. You may submit comments, identified by RIN 1210–AB32, by any of the following methods:

Federal eRulemaking Portal: http://www.regulations.gov. Follow instructions for submitting comments.

Email: e-ORI@dol.gov. Include RIN 1210–AB32 in the subject line of the message.

Mail: Office of Regulations and Interpretations, Employee Benefits Security Administration, Attn: Conflict of Interest Rule, Room N–5655, U.S. Department of Labor, 200 Constitution Avenue NW., Washington, DC 20210.

Hand Delivery/Courier: Office of Regulations and Interpretations, Employee Benefits Security Administration, Attn: Conflict of Interest Rule, Room N–5655, U.S. Department of Labor, 200 Constitution Avenue NW., Washington, DC 20210.

Instructions: All comments received must include the agency name and Regulatory Identifier Number (RIN) for this rulemaking (RIN 1210–AB32). Persons submitting comments electronically are encouraged not to submit paper copies. All comments received will be made available to the public, posted without change to *http://www.regulations.gov* and *http://www.dol.gov/ebsa,* and made available for public inspection at the Public Disclosure Room, N–1513, Employee Benefits Security Administration, U.S. Department of Labor, 200 Constitution Avenue NW., Washington, DC 20210, including any personal information provided.

FOR FURTHER INFORMATION CONTACT:

For Questions Regarding the Proposed Rule: Contact Luisa Grillo-Chope or Fred Wong, Office of Regulations and Interpretations, Employee Benefits Security Administration (EBSA), (202) 693–8825.

For Questions Regarding the Proposed Prohibited Transaction Exemptions: Contact Karen Lloyd, Office of Exemption Determinations, EBSA, 202–693–8824.

For Questions Regarding the Regulatory Impact Analysis: Contact G. Christopher Cosby, Office of Policy and Research, EBSA, 202–693–8425. (These are not toll-free numbers).

SUPPLEMENTARY INFORMATION:

I. Executive Summary

A. Purpose of the Regulatory Action

Under ERISA and the Code, a person is a fiduciary to a plan or IRA to the extent that he or she engages in specified plan activities, including rendering ''investment advice for a fee or other compensation, direct or indirect, with respect to any moneys or other property of such plan . . .'' ERISA safeguards plan participants by imposing trust law standards of care and undivided loyalty on plan fiduciaries, and by holding fiduciaries accountable when they breach those obligations. In addition, fiduciaries to plans and IRAs are not permitted to engage in ''prohibited transactions,'' which pose special dangers to the security of retirement, health, and other benefit plans because of fiduciaries' conflicts of interest with respect to the transactions. Under this regulatory structure, fiduciary status and responsibilities are central to protecting the public interest in the integrity of retirement and other important benefits, many of which are tax-favored.

In 1975, the Department issued regulations that significantly narrowed the breadth of the statutory definition of fiduciary investment advice by creating a five-part test that must, in each instance, be satisfied before a person can be treated as a fiduciary adviser. This regulatory definition applies to both ERISA and the Code. The Department created the test in a very different context, prior to the existence of participant-directed 401(k) plans, widespread investments in IRAs, and the now commonplace rollover of plan assets from fiduciary-protected plans to IRAs. Today, as a result of the five-part test, many investment professionals, consultants, and advisers [1] have no obligation to adhere to ERISA's fiduciary standards or to the prohibited transaction rules, despite the critical role they play in guiding plan and IRA investments. Under ERISA and the Code, if these advisers are not fiduciaries, they may operate with conflicts of interest that they need not disclose and have limited liability under federal pension law for any harms resulting from the advice they provide. Non-fiduciaries may give imprudent and disloyal advice; steer plans and IRA owners to investments based on their own, rather than their customers' financial interests; and act on conflicts of interest in ways that would be prohibited if the same persons were fiduciaries. In light of the breadth and intent of ERISA and the Code's statutory

[1] By using the term ''adviser,'' the Department does not intend to limit its use to investment advisers registered under the Investment Advisers Act of 1940 or under state law. For example, as used herein, an adviser can be an individual or entity who can be, among other things, a representative of a registered investment adviser, a bank or similar financial institution, an insurance company, or a broker-dealer.

definition, the growth of participant-directed investment arrangements and IRAs, and the need for plans and IRA owners to seek out and rely on sophisticated financial advisers to make critical investment decisions in an increasingly complex financial marketplace, the Department believes it is appropriate to revisit its 1975 regulatory definition as well as the Code's virtually identical regulation. With this regulatory action, the Department proposes to replace the 1975 regulations with a definition of fiduciary investment advice that better reflects the broad scope of the statutory text and its purposes and better protects plans, participants, beneficiaries, and IRA owners from conflicts of interest, imprudence, and disloyalty.

The Department has also sought to preserve beneficial business models for delivery of investment advice by separately proposing new exemptions from ERISA's prohibited transaction rules that would broadly permit firms to continue common fee and compensation practices, as long as they are willing to adhere to basic standards aimed at ensuring that their advice is in the best interest of their customers. Rather than create a highly prescriptive set of transaction-specific exemptions, the Department instead is proposing a set of exemptions that flexibly accommodate a wide range of current business practices, while minimizing the harmful impact of conflicts of interest on the quality of advice.

In particular, the Department is proposing a new exemption (the ''Best Interest Contract Exemption'') that would provide conditional relief for common compensation, such as commissions and revenue sharing, that an adviser and the adviser's employing firm might receive in connection with investment advice to retail retirement investors.[2] In order to protect the interests of plans, participants and beneficiaries, and IRA owners, the exemption requires the firm and the adviser to contractually acknowledge fiduciary status, commit to adhere to basic standards of impartial conduct, adopt policies and procedures reasonably designed to minimize the harmful impact of conflicts of interest, and disclose basic information on their conflicts of interest and on the cost of their advice. Central to the exemption is the adviser and firm's agreement to meet fundamental obligations of fair dealing and fiduciary conduct—to give advice that is in the customer's best interest; avoid misleading statements; receive no more than reasonable compensation; and comply with applicable federal and state laws governing advice. This principles-based approach aligns the adviser's interests with those of the plan participant or IRA owner, while leaving the adviser and employing firm with the flexibility and discretion necessary to determine how best to satisfy these basic standards in light of the unique attributes of their business. The Department is similarly proposing to amend existing exemptions for a wide range of fiduciary advisers to ensure adherence to these basic standards of fiduciary conduct. In addition, the Department is proposing a new exemption for ''principal transactions'' in which advisers sell certain debt securities to plans and IRAs out of their own inventory, as well as an amendment to an existing exemption that would permit advisers to receive compensation for extending credit to plans or IRAs to avoid failed securities transactions. In addition to the Best Interest Contract Exemption, the Department is also seeking public comment on whether it should issue a separate streamlined exemption that would allow advisers to receive otherwise prohibited compensation in connection with plan, participant and beneficiary accounts, and IRA investments in certain high-quality low-fee investments, subject to fewer conditions. This is discussed in greater detail in the **Federal Register** notice related to the proposed Best Interest Contract Exemption.

This broad regulatory package aims to enable advisers and their firms to give advice that is in the best interest of their customers, without disrupting common compensation arrangements under conditions designed to ensure the adviser is acting in the best interest of the advice recipient. The proposed new exemptions and amendments to existing exemptions are published elsewhere in today's edition of the **Federal Register**.

B. Summary of the Major Provisions of the Proposed Rule

The proposed rule clarifies and rationalizes the definition of fiduciary investment advice subject to specific carve-outs for particular types of communications that are best understood as non-fiduciary in nature. Under the definition, a person renders investment advice by (1) providing investment or investment management recommendations or appraisals to an employee benefit plan, a plan fiduciary, participant or beneficiary, or an IRA owner or fiduciary, and (2) either (a) acknowledging the fiduciary nature of the advice, or (b) acting pursuant to an agreement, arrangement, or understanding with the advice recipient that the advice is individualized to, or specifically directed to, the recipient for consideration in making investment or management decisions regarding plan assets. When such advice is provided for a fee or other compensation, direct or indirect, the person giving the advice is a fiduciary.

Although the new general definition of investment advice avoids the weaknesses of the current regulation, standing alone it could sweep in some relationships that are not appropriately regarded as fiduciary in nature and that the Department does not believe Congress intended to cover as fiduciary relationships. Accordingly, the proposed regulation includes a number of specific carve-outs to the general definition. For example, the regulation draws an important distinction between fiduciary investment advice and non-fiduciary investment or retirement education. Similarly, under the ''seller's carve-out,''[3] the proposal would not treat as fiduciary advice recommendations made to a plan in an arm's length transaction where there is generally no expectation of fiduciary investment advice, provided that the carve-out's specific conditions are met. In addition, the proposal includes specific carve-outs for advice rendered by employees of the plan sponsor, platform providers, and persons who offer or enter into swaps or security-based swaps with plans. All of the rule's carve-outs are subject to conditions designed to draw an appropriate line between fiduciary and non-fiduciary communications, consistent with the text and purpose of the statutory provisions.

Finally, in addition to the new proposal in this Notice, the Department is simultaneously proposing a new Best Interest Contract Exemption, revising other exemptions from the prohibited transaction rules of ERISA and the Code and is exploring through a request for comments the concept of an additional low-fee exemption.

[2] For purposes of the exemption, retail investors include (1) the participants and beneficiaries of participant-directed plans, (2) IRA owners, and (3) the sponsors (including employees, officers, or directors thereof) of non participant-directed plans with fewer than 100 participants to the extent the sponsors (including employees, officers, or directors thereof) act as a fiduciary with respect to plan investment decisions.

[3] Although referred to herein as the ''seller's carve-out,'' we note that the carve-out provided in paragraph (b)(1)(i) of the proposal is not limited to sales and would apply to incidental advice provided in connection with an arm's length sale, purchase, loan, or bilateral contract between a plan investor with financial expertise and the adviser.

C. Gains to Investors and Compliance Costs

When the Department promulgated the 1975 rule, 401(k) plans did not exist, IRAs had only just been authorized, and the majority of retirement plan assets were managed by professionals, rather than directed by individual investors. Today, individual retirement investors have much greater responsibility for directing their own investments, but they seldom have the training or specialized expertise necessary to prudently manage retirement assets on their own. As a result, they often depend on investment advice for guidance on how to manage their savings to achieve a secure retirement. In the current marketplace for retirement investment advice, however, advisers commonly have direct and substantial conflicts of interest, which encourage investment recommendations that generate higher fees for the advisers at the expense of their customers and often result in lower returns for customers even before fees.

A wide body of economic evidence supports a finding that the impact of these conflicts of interest on retirement investment outcomes is large and, from the perspective of advice recipients, negative. As detailed in the Department's Regulatory Impact Analysis (available at *www.dol.gov/ebsa/pdf/conflictsofinterestria.pdf*), the supporting evidence includes, among other things, statistical analyses of conflicted investment channels, experimental studies, government reports documenting abuse, and basic economic theory on the dangers posed by conflicts of interest and by the asymmetries of information and expertise that characterize interactions between ordinary retirement investors and conflicted advisers. This evidence takes into account existing protections under ERISA as well as other federal and state laws. A review of this data, which consistently points to substantial failures in the market for retirement advice, suggests that IRA holders receiving conflicted investment advice can expect their investments to underperform by an average of 100 basis points per year over the next 20 years. The underperformance associated with conflicts of interest—in the mutual funds segment alone—could cost IRA investors more than $210 billion over the next 10 years and nearly $500 billion over the next 20 years. Some studies suggest that the underperformance of broker-sold mutual funds may be even higher than 100 basis points, possibly due to loads that are taken off the top and/or poor timing of broker sold investments. If the true underperformance of broker-sold funds is 200 basis points, IRA mutual fund holders could suffer from underperformance amounting to $430 billion over 10 years and nearly $1 trillion across the next 20 years. While the estimates based on the mutual fund market are large, the total market impact could be much larger. Insurance products, Exchange Traded Funds (ETFs), individual stocks and bonds, and other products are all sold by agents and brokers with conflicts of interest.

The Department expects the proposal would deliver large gains for retirement investors. Because of data constraints, only some of these gains can be quantified with confidence. Focusing only on how load shares paid to brokers affect the size of loads paid by IRA investors holding load funds and the returns they achieve, the Department estimates the proposal would deliver to IRA investors gains of between $40 billion and $44 billion over 10 years and between $88 billion and $100 billion over 20 years. These estimates assume that the rule would eliminate (rather than just reduce) underperformance associated with the practice of incentivizing broker recommendations through variable front-end-load sharing; if the rule's effectiveness in this area is substantially below 100 percent, these estimates may overstate these particular gains to investors in the front-load mutual fund segment of the IRA market. The Department nonetheless believes that these gains alone would far exceed the proposal's compliance cost. For example, if only 75 percent of anticipated gains were realized, the quantified subset of such gains—specific to the front-load mutual fund segment of the IRA market—would amount to between $30 billion and $33 billion over 10 years. If only 50 percent were realized, this subset of expected gains would total between $20 billion and $22 billion over 10 years, or several times the proposal's estimated compliance cost of $2.4 billion to 5.7 billion over the same 10 years. These gain estimates also exclude additional potential gains to investors resulting from reducing or eliminating the effects of conflicts in financial products other than front-end-load mutual funds. The Department invites input that would make it possible to quantify the magnitude of the rule's effectiveness and of any additional, not-yet-quantified gains for investors.

These estimates account for only a fraction of potential conflicts, associated losses, and affected retirement assets. The total gains to IRA investors attributable to the rule may be much higher than these quantified gains alone for several reasons. The Department expects the proposal to yield large, additional gains for IRA investors, including potential reductions in excessive trading and associated transaction costs and timing errors (such as might be associated with return chasing), improvements in the performance of IRA investments other than front-load mutual funds, and improvements in the performance of defined contribution (DC) plan investments. As noted above, under current rules, adviser conflicts could cost IRA investors as much as $410 billion over 10 years and $1 trillion over 20 years, so the potential additional gains to IRA investors from this proposal could be very large.

The following accounting table summarizes the Department's conclusions:

TABLE 1—PARTIAL GAINS TO INVESTORS AND COMPLIANCE COSTS ACCOUNTING TABLE

Category	Primary estimate	Low estimate	High estimate	Year dollar	Discount rate (9%)	Period covered
Partial Gains to Investors						
Annualized, Monetized ($millions/year)	$4,243	$3,830		2015	7	2017–2026
	$5,170	4,666		2015	3	2017–2026

TABLE 1—PARTIAL GAINS TO INVESTORS AND COMPLIANCE COSTS ACCOUNTING TABLE—Continued

Category	Primary estimate	Low estimate	High estimate	Year dollar	Discount rate (9%)	Period covered
Notes: The proposal is expected to deliver large gains for retirement investors. Because of limitations of the literature and other available evidence, only some of these gains can be quantified. The estimates in this table focus only on how load shares paid to brokers affect the size of loads IRA investors holding load funds pay and the returns they achieve. These estimates assume that the rule will eliminate (rather than just reduce) underperformance associated with the practice of incentivizing broker recommendations through variable front-end-load sharing. If, however, the rule's effectiveness in reducing underperformance is substantially below 100 percent, these estimates may overstate these particular gains to investors in the front-end-load mutual fund segment of the IRA market. However, these estimates account for only a fraction of potential conflicts, associated losses, and affected retirement assets. The total gains to IRA investors attributable to the rule may be higher than the quantified gains alone for several reasons. For example, the proposal is expected to yield additional gains for IRA investors, including potential reductions in excessive trading and associated transaction costs and timing errors (such as might be associated with return chasing), improvements in the performance of IRA investments other than front-load mutual funds, and improvements in the performance of DC plan investments.						
The partial-gains-to-investors estimates include both economic efficiency benefits and transfers from the financial services industry to IRA holders.						
The partial gains estimates are discounted to December 31, 2015.						
Compliance Costs						
Annualized, Monetized ($millions/year)	$348 328	....	$706 664	2015 2015	7 3	2016–2025 2016–2025
Notes: The compliance costs of the current proposal including the cost of compliance reviews, comprehensive compliance and supervisory system changes, policies and procedures and training programs updates, insurance increases, disclosure preparation and distribution, and some costs of changes in other business practices. Compliance costs incurred by mutual funds or other asset providers have not been estimated.						
Insurance Premium Transfers						
Annualized Monetized ($millions/year)	$63 63	....	....	2015 2015	7 3	2016–2025 2016–2025
From/To	From: Service providers facing increased insurance premiums due to increased liability risk			To: Plans, participants, beneficiaries, and IRA investors through the payment of recoveries—funded from a portion of the increased insurance premiums		

OMB Circular A–4 requires the presentation of a social welfare accounting table that summarizes a regulation's benefits, costs and transfers (monetized, where possible). A summary of this type would differ from and expand upon Table I in several ways:

• In the language of social welfare economics as reflected in Circular A–4, investor gains comprise two parts: Social welfare ''benefits'' attributable to improvements in economic efficiency and ''transfers'' of welfare to retirement investors from the financial services industry. Due to limitations of the literature and other available evidence, the investor gains estimates presented in Table I have not been broken down into benefits and transfer components, but making the distinction between these categories of impacts is key for a social welfare accounting statement.

• The estimates in Table I reflect only a subset of the gains to investors resulting from the rule, but may overstate this subset. As noted in Table I, the Department's estimates of partial gains to investors reflect an assumption that the rule will eliminate, rather than just reduce, underperformance associated with the practice of incentivizing broker recommendations through variable front-end-load sharing. If, however, the rule's effectiveness is substantially below 100 percent, these estimates would overstate these partial gains to investors in the front-load mutual fund segment of the IRA market. The estimates in Table I also exclude additional potential gains to investors resulting from reducing or eliminating the effects of conflicts in financial products other than front-end-load mutual funds in the IRA market, and all potential gains to investors in the plan market. The Department invites input that would make it possible to quantify the magnitude of the rule's effectiveness and of any additional, not-yet-quantified gains for investors.

• Generally, the gains to investors consist of multiple parts: Transfers to IRA investors from advisers and others in the supply chain, benefits to the overall economy from a shift in the allocation of investment dollars to projects that have higher returns, and resource savings associated with, for example, reductions in excessive turnover and wasteful and unsuccessful efforts to outperform the market. Some of these gains are partially quantified in Table I. Also, the estimates in Table I assume the gains to investors arise gradually as the fraction of wealth invested based on conflicted investment advice slowly declines over time based on historical patterns of asset turnover. However, the estimates do not account for potential transition costs associated with a shift of investments to higher-performing vehicles. These transition costs have not been quantified due to lack of granularity in the literature or availability of other evidence on both the portion of investor gains that consists of resource savings, as opposed to transfers, and the amount of transitional cost that would be incurred per unit of resource savings.

• Other categories of costs not yet quantified include compliance costs incurred by mutual funds or other asset providers. Enforcement costs or other costs borne by the government are also not quantified.

The Department requests detailed comment, data, and analysis on all of the issues outlined above for incorporation into the social welfare analysis at the finalization stage of the rulemaking process.

For a detailed discussion of the gains to investors and compliance costs of the

current proposal, please see Section J. Regulatory Impact Analysis, below.

II. Overview

A. Rulemaking Background

The market for retirement advice has changed dramatically since the Department first promulgated the 1975 regulation. Individuals, rather than large employers and professional money managers, have become increasingly responsible for managing retirement assets as IRAs and participant-directed plans, such as 401(k) plans, have supplanted defined benefit pensions. At the same time, the variety and complexity of financial products have increased, widening the information gap between advisers and their clients. Plan fiduciaries, plan participants and IRA investors must often rely on experts for advice, but are unable to assess the quality of the expert's advice or effectively guard against the adviser's conflicts of interest. This challenge is especially true of small retail investors who typically do not have financial expertise and can ill-afford lower returns to their retirement savings caused by conflicts. As baby boomers retire, they are increasingly moving money from ERISA-covered plans, where their employer has both the incentive and the fiduciary duty to facilitate sound investment choices, to IRAs where both good and bad investment choices are myriad and advice that is conflicted is commonplace. Such ''rollovers'' will total more than $2 trillion over the next 5 years. These trends were not apparent when the Department promulgated the 1975 rule. At that time, 401(k) plans did not yet exist and IRAs had only just been authorized. These changes in the marketplace, as well as the Department's experience with the rule since 1975, support the Department's efforts to reevaluate and revise the rule through a public process of notice and comment rulemaking.

On October 22, 2010, the Department published a proposed rule in the **Federal Register** (75 FR 65263) (2010 Proposal) proposing to amend 29 CFR 2510.3–21(c) (40 FR 50843, Oct. 31, 1975), which defines when a person renders investment advice to an employee benefit plan, and consequently acts as a fiduciary under ERISA section 3(21)(A)(ii) (29 U.S.C. 1002(21)(A)(ii)). In response to this proposal, the Department received over 300 comment letters. A public hearing on the 2010 Proposal was held in Washington, DC on March 1 and 2, 2011, at which 38 speakers testified. The transcript of the hearing was made available for additional public comment and the Department received over 60 additional comment letters. In addition, the Department has held many meetings with interested parties.

A number of commenters urged consideration of other means to attain the objectives of the 2010 Proposal and of additional analysis of the proposal's expected costs and benefits. In light of these comments and because of the significance of this rule, the Department decided to issue a new proposed regulation. On September 19, 2011 the Department announced that it would withdraw the 2010 Proposal and propose a new rule defining the term ''fiduciary'' for purposes of section 3(21)(A)(ii) of ERISA. This document fulfills that announcement in publishing both a new proposed regulation and withdrawing the 2010 Proposal. Consistent with the President's Executive Orders 12866 and 13563, extending the rulemaking process will give the public a full opportunity to evaluate and comment on the revised proposal and updated economic analysis. In addition, we are simultaneously publishing proposed new and amended exemptions from ERISA and the Code's prohibited transaction rules designed to allow certain broker-dealers, insurance agents and others that act as investment advice fiduciaries to nevertheless continue to receive common forms of compensation that would otherwise be prohibited, subject to appropriate safeguards. The existing class exemptions will otherwise remain in place, affording flexibility to fiduciaries who currently use the exemptions or who wish to use the exemptions in the future. The proposed new regulatory package takes into account robust public comment and input and represents a substantial change from the 2010 Proposal, balancing long overdue consumer protections with flexibility for the industry in order to minimize disruptions to current business models.

In crafting the current regulatory package, the Department has benefitted from the views and perspectives expressed in public comments to the 2010 Proposal. For example, the Department has responded to concerns about the impact of the prohibited transaction rules on the marketplace for retail advice by proposing a broad package of exemptions that are intended to ensure that advisers and their firms make recommendations that are in the best interest of plan participants and IRA owners, without disrupting common fee arrangements. In response to commenters, the Department has also determined not to include, as fiduciary in nature, appraisals or valuations of employer securities provided to ESOPs or to certain collective investment funds holding assets of plan investors. On a more technical point, the Department also followed recommendations that it not automatically assign fiduciary status to investment advisers under the Advisers Act, but instead follow an entirely functional approach to fiduciary status. In light of public comments, the new proposal also makes a number of other changes to the regulatory proposal. For example, the Department has addressed concerns that it could be misread to extend fiduciary status to persons that prepare newsletters, television commentaries, or conference speeches that contain recommendations made to the general public. Similarly, the rule makes clear that fiduciary status does not extend to internal company personnel who give advice on behalf of their plan sponsor as part of their duties, but receive no compensation beyond their salary for the provision of advice. The Department is appreciative of the comments it received to the 2010 Proposal, and more fully discusses a number of the comments that influenced change in the sections that follow. In addition, the Department is eager to receive comments on the new proposal in general, and requests public comment on a number of specific aspects of the package as indicated below.

The following discussion summarizes the 2010 Proposal, describes some of the concerns and issues raised by commenters, and explains the new proposed regulation, which is published with this notice.

B. The Statute and Existing Regulation

ERISA (or the ''Act'') is a comprehensive statute designed to protect the interests of plan participants and beneficiaries, the integrity of employee benefit plans, and the security of retirement, health, and other critical benefits. The broad public interest in ERISA-covered plans is reflected in the Act's imposition of stringent fiduciary responsibilities on parties engaging in important plan activities, as well as in the tax-favored status of plan assets and investments. One of the chief ways in which ERISA protects employee benefit plans is by requiring that plan fiduciaries comply with fundamental obligations rooted in the law of trusts. In particular, plan fiduciaries must manage plan assets prudently and with undivided loyalty to the plans and their participants and beneficiaries.[4] In addition, they must refrain from

[4] ERISA section 404(a).

engaging in ''prohibited transactions,'' which the Act does not permit because of the dangers to the interests of the plan and IRA posed by the transactions.[5] When fiduciaries violate ERISA's fiduciary duties or the prohibited transaction rules, they may be held personally liable for any losses to the investor resulting from the breach.[6] In addition, violations of the prohibited transaction rules are subject to excise taxes under the Code.

The Code also protects individuals who save for retirement through tax-favored accounts that are not generally covered by ERISA, such as IRAs, through a more limited regulation of fiduciary conduct. Although ERISA's general fiduciary obligations of prudence and loyalty do not govern the fiduciaries of IRAs and other plans not covered by ERISA, these fiduciaries are subject to the prohibited transaction rules of the Code. In this context, however, the sole statutory sanction for engaging in the illegal transactions is the assessment of an excise tax enforced by the Internal Revenue Service (IRS). Thus, unlike participants in plans covered by Title I of ERISA, IRA owners do not have a statutory right to bring suit against fiduciaries under ERISA for violation of the prohibited transaction rules and fiduciaries are not personally liable to IRA owners for the losses caused by their misconduct.

Under this statutory framework, the determination of who is a ''fiduciary'' is of central importance. Many of ERISA's and the Code's protections, duties, and liabilities hinge on fiduciary status. In relevant part, section 3(21)(A) of ERISA provides that a person is a fiduciary with respect to a plan to the extent he or she (i) exercises any discretionary authority or discretionary control with respect to management of such plan or exercises any authority or control with respect to management or disposition of its assets; (ii) renders investment advice for a fee or other compensation, direct or indirect, with respect to any moneys or other property of such plan, or has any authority or responsibility to do so; or, (iii) has any discretionary authority or discretionary responsibility in the administration of such plan. Section 4975(e)(3) of the IRC identically defines ''fiduciary'' for purposes of the prohibited transaction rules set forth in Code section 4975.

The statutory definition contained in section 3(21)(A) deliberately casts a wide net in assigning fiduciary responsibility with respect to plan assets. Thus, ''any authority or control'' over plan assets is sufficient to confer fiduciary status, and any person who renders ''investment advice for a fee or other compensation, direct or indirect'' is an investment advice fiduciary, regardless of whether they have direct control over the plan's assets, and regardless of their status as an investment adviser and/or broker under the federal securities laws. The statutory definition and associated fiduciary responsibilities were enacted to ensure that plans can depend on persons who provide investment advice for a fee to make recommendations that are prudent, loyal, and untainted by conflicts of interest. In the absence of fiduciary status, persons who provide investment advice would neither be subject to ERISA's fundamental fiduciary standards, nor accountable under ERISA or the Code for imprudent, disloyal, or tainted advice, no matter how egregious the misconduct or how substantial the losses. Plans, individual participants and beneficiaries, and IRA owners often are not financial experts and consequently must rely on professional advice to make critical investment decisions. The statutory definition, prohibitions on conflicts of interest, and core fiduciary obligations of prudence and loyalty, all reflect Congress' recognition in 1974 of the fundamental importance of such advice to protect savers' retirement nest eggs. In the years since then, the significance of financial advice has become still greater with increased reliance on participant-directed plans and self-directed IRAs for the provision of retirement benefits.

In 1975, the Department issued a regulation, at 29 CFR 2510.3–21(c) defining the circumstances under which a person is treated as providing ''investment advice'' to an employee benefit plan within the meaning of section 3(21)(A)(ii) of ERISA (the ''1975 regulation''), and the Department of the Treasury issued a virtually identical regulation under the Code.[7] The regulation narrowed the scope of the statutory definition of fiduciary investment advice by creating a five-part test that must be satisfied before a person can be treated as rendering investment advice for a fee. Under the regulation, for advice to constitute ''investment advice,'' an adviser who is not a fiduciary under another provision of the statute must—(1) render advice as to the value of securities or other property, or make recommendations as to the advisability of investing in, purchasing or selling securities or other property (2) on a regular basis (3) pursuant to a mutual agreement, arrangement or understanding, with the plan or a plan fiduciary that (4) the advice will serve as a primary basis for investment decisions with respect to plan assets, and that (5) the advice will be individualized based on the particular needs of the plan or IRA. The regulation provides that an adviser is a fiduciary with respect to any particular instance of advice only if he or she meets each and every element of the five-part test with respect to the particular advice recipient or plan at issue.

As the marketplace for financial services has developed in the years since 1975, the five-part test may now undermine, rather than promote, the statutes' text and purposes. The narrowness of the 1975 regulation allows advisers, brokers, consultants and valuation firms to play a central role in shaping plan and IRA investments, without ensuring the accountability that Congress intended for persons having such influence and responsibility. Even when plan sponsors, participants, beneficiaries, and IRA owners clearly rely on paid advisers for impartial guidance, the regulation allows many advisers to avoid fiduciary status and disregard ERISA's fiduciary obligations of care and prohibitions on disloyal and conflicted transactions. As a consequence, these advisers can steer customers to investments based on their own self-interest (*e.g.,* products that generate higher fees for the adviser even if there are identical lower-fee products available), give imprudent advice, and engage in transactions that would otherwise not be permitted by ERISA and the Code without fear of accountability under either ERISA or the Code.

Instead of ensuring that trusted advisers give prudent and unbiased advice in accordance with fiduciary norms, the current regulation erects a multi-part series of technical impediments to fiduciary responsibility. The Department is concerned that the specific elements of the five-part test—which are not found in the text of the Act or Code—now work to frustrate statutory goals and defeat advice recipients' legitimate expectations. In

[5] ERISA section 406. The Act also prohibits certain transactions between a plan and a ''party in interest.''

[6] ERISA section 409; *see also* ERISA section 405.

[7] See 26 CFR 54.4975–9(c), which interprets Code section 4975(e)(3). 40 FR 50840 (Oct. 31, 1975). Under section 102 of Reorganization Plan No. 4 of 1978, the authority of the Secretary of the Treasury to interpret section 4975 of the Code has been transferred, with certain exceptions not here relevant, to the Secretary of Labor. References in this document to sections of ERISA should be read to refer also to the corresponding sections of the Code.

light of the importance of the proper management of plan and IRA assets, it is critical that the regulation defining investment advice draws appropriate distinctions between the sorts of advice relationships that should be treated as fiduciary in nature and those that should not. In practice, the current regulation appears not to do so. Instead, the lines drawn by the five-part test frequently permit evasion of fiduciary status and responsibility in ways that undermine the statutory text and purposes.

One example of the five-part test's shortcomings is the requirement that advice be furnished on a ''regular basis.'' As a result of the requirement, if a small plan hires an investment professional or appraiser on a one-time basis for an investment recommendation or valuation opinion on a large, complex investment, the adviser has no fiduciary obligation to the plan under ERISA. Even if the plan is considering investing all or substantially all of the plan's assets, lacks the specialized expertise necessary to evaluate the complex transaction on its own, and the consultant fully understands the plan's dependence on his professional judgment, the consultant is not a fiduciary because he does not advise the plan on a ''regular basis.'' The plan could be investing hundreds of millions of dollars in plan assets, and it could be the most critical investment decision the plan ever makes, but the adviser would have no fiduciary responsibility under the 1975 regulation. While a consultant who regularly makes less significant investment recommendations to the plan would be a fiduciary if he satisfies the other four prongs of the regulatory test, the one-time consultant on an enormous transaction has no fiduciary responsibility.

In such cases, the ''regular basis'' requirement, which is not found in the text of ERISA or the Code, fails to draw a sensible line between fiduciary and non-fiduciary conduct, and undermines the law's protective purposes. A specific example is the one-time purchase of a group annuity to cover all of the benefits promised to substantially all of a plan's participants for the rest of their lives when a defined benefit plan terminates or a plan's expenditure of hundreds of millions of dollars on a single real estate transaction with the assistance of a financial adviser hired for purposes of that one transaction. Despite the clear importance of the decisions and the clear reliance on paid advisers, the advisers would not be plan fiduciaries. On a smaller scale that is still immensely important for the affected individual, the ''regular basis'' requirement also deprives individual participants and IRA owners of statutory protection when they seek specialized advice on a one-time basis, even if the advice concerns the investment of all or substantially all of the assets held in their account (*e.g.,* as in the case of an annuity purchase or a roll-over from a plan to an IRA or from one IRA to another).

Under the five-part test, fiduciary status can also be defeated by arguing that the parties did not have a *mutual* agreement, arrangement, or understanding that the advice would serve as a *primary basis* for investment decisions. Investment professionals in today's marketplace frequently market retirement investment services in ways that clearly suggest the provision of tailored or individualized advice, while at the same time disclaiming in fine print the requisite ''mutual'' understanding that the advice will be used as a primary basis for investment decisions.

Similarly, there appears to be a widespread belief among broker-dealers that they are not fiduciaries with respect to plans or IRAs because they do not hold themselves out as registered investment advisers, even though they often market their services as financial or retirement planners. The import of such disclaimers—and of the fine legal distinctions between brokers and registered investment advisers—is often completely lost on plan participants and IRA owners who receive investment advice. As shown in a study conducted by the RAND Institute for Civil Justice for the Securities and Exchange Commission (SEC), consumers often do not read the legal documents and do not understand the difference between brokers and registered investment advisers particularly when brokers adopt such titles as ''financial adviser'' and ''financial manager.'' [8]

Even in the absence of boilerplate fine print disclaimers, however, it is far from evident how the ''primary basis'' element of the five-part test promotes the statutory text or purposes of ERISA and the Code. If, for example, a plan hires multiple specialized advisers for an especially complex transaction, it should be able to rely upon all of the consultants' advice, regardless of whether one could characterize any particular consultant's advice as primary, secondary, or tertiary. Presumably, paid consultants make recommendations—and retirement investors pay for them—with the hope or expectation that the recommendations could, in fact, be relied upon in making important decisions. When a plan, participant, beneficiary, or IRA owner directly or indirectly pays for advice upon which it can rely, there appears to be little statutory basis for drawing distinctions based on a subjective characterization of the advice as ''primary,'' ''secondary,'' or other.

In other respects, the current regulatory definition could also benefit from clarification. For example, a number of parties have argued that the regulation, as currently drafted, does not encompass advice as to the selection of money managers or mutual funds. Similarly, they have argued that the regulation does not cover advice given to the managers of pooled investment vehicles that hold plan assets contributed by many plans, as opposed to advice given to particular plans. Parties have even argued that advice was insufficiently ''individualized'' to fall within the scope of the regulation because the advice provider had failed to prudently consider the ''particular needs of the plan,'' notwithstanding the fact that both the advice provider and the plan agreed that individualized advice based on the plan's needs would be provided, and the adviser actually made specific investment recommendations to the plan. Although the Department disagrees with each of these interpretations of the current regulation, the arguments nevertheless suggest that clarifying regulatory text could be helpful.

Changes in the financial marketplace have enlarged the gap between the 1975 regulation's effect and the Congressional intent of the statutory definition. The greatest change is the predominance of individual account plans, many of which require participants to make investment decisions for their own accounts. In 1975, private-sector defined benefit pensions—mostly large, professionally managed funds—covered over 27 million active participants and held assets totaling almost $186 billion. This compared with just 11 million active participants in individual account defined contribution plans with assets of just $74 billion.[9] Moreover, the great majority of defined contribution plans at that time were professionally

[8] Angela A. Hung, Noreen Clancy, Jeff Dominitz, Eric Talley, Claude Berrebi, Farrukh Suvankulov, *Investor and Industry Perspectives on Investment Advisers and Broker-Dealers,* RAND Institute for Civil Justice, commissioned by the U.S. Securities and Exchange Commission, 2008, at *http://www.sec.gov/news/press/2008/2008-1_randiabdreport.pdf*

[9] U.S. Department of Labor, *Private Pension Plan Bulletin Historical Tables and Graphs,* (Dec. 2014), at *http://www.dol.gov/ebsa/pdf/historicaltables.pdf.*

managed, not participant-directed. In 1975, 401(k) plans did not yet exist and IRAs had just been authorized as part of ERISA's enactment the prior year. In contrast, by 2012 defined benefit plans covered just under 16 million active participants, while individual account-based defined contribution plans covered over 68 million active participants— including 63 million participants in 401(k)-type plans that are participant-directed.[10]

With this transformation, plan participants, beneficiaries and IRA owners have become major consumers of investment advice that is paid for directly or indirectly. By 2012, 97 percent of 401(k) participants were responsible for directing the investment of all or part of their own account, up from 86 percent as recently as 1999.[11] Also, in 2013, more than 34 million households owned IRAs.[12]

Many of the consultants and advisers who provide investment-related advice and recommendations receive compensation from the financial institutions whose investment products they recommend. This gives the consultants and advisers a strong bias, conscious or unconscious, to favor investments that provide them greater compensation rather than those that may be most appropriate for the participants. Unless they are fiduciaries, however, these consultants and advisers are free under ERISA and the Code, not only to receive such conflicted compensation, but also to act on their conflicts of interest to the detriment of their customers. In addition, plans, participants, beneficiaries, and IRA owners now have a much greater variety of investments to choose from, creating a greater need for expert advice. Consolidation of the financial services industry and innovations in compensation arrangements have multiplied the opportunities for self-dealing and reduced the transparency of fees.

The absence of adequate fiduciary protections and safeguards is especially problematic in light of the growth of participant-directed plans and self-directed IRAs; the gap in expertise and information between advisers and the customers who depend upon them for guidance; and the advisers' significant conflicts of interest.

When Congress enacted ERISA in 1974, it made a judgment that plan advisers should be subject to ERISA's fiduciary regime and that plan participants, beneficiaries and IRA owners should be protected from conflicted transactions by the prohibited transaction rules. More fundamentally, however, the statutory language was designed to cover a much broader category of persons who provide fiduciary investment advice based on their functions and to limit their ability to engage in self-dealing and other conflicts of interest than is currently reflected in the five-part test. While many advisers are committed to providing high-quality advice and always put their customers' best interests first, the 1975 regulation makes it far too easy for advisers in today's marketplace not to do so and to avoid fiduciary responsibility even when they clearly purport to give individualized advice and to act in the client's best interest, rather than their own.

C. The 2010 Proposal

In 2010, the Department proposed a new regulation that would have replaced the five-part test with a new definition of what counted as fiduciary investment advice for a fee. At that time, the Department did not propose any new prohibited transaction exemptions and acknowledged uncertainty regarding whether existing exemptions would be available, but specifically invited comments on whether new or amended exemptions should be proposed. The proposal also provided carve-outs for conduct that would not result in fiduciary status. The general definition included the following types of advice: (1) Appraisals or fairness opinions concerning the value of securities or other property; (2) recommendations as to the advisability of investing in, purchasing, holding or selling securities or other property; and (3) recommendations as to the management of securities or other property. Reflecting the Department's longstanding interpretation of the 1975 regulations, the 2010 Proposal made clear that investment advice under the proposal includes advice provided to plan participants, beneficiaries and IRA owners as well as to plan fiduciaries.

Under the 2010 Proposal, a paid adviser would have been treated as a fiduciary if the adviser provided one of the above types of advice and either: (1) Represented that he or she was acting as an ERISA fiduciary; (2) was already an ERISA fiduciary to the plan by virtue of having control over the management or disposition of plan assets, or by having discretionary authority over the administration of the plan; (3) was already an investment adviser under the Investment Advisers Act of 1940 (Advisers Act); or (4) provided the advice pursuant to an agreement or understanding that the advice may be considered in connection with plan investment or asset management decisions and would be individualized to the needs of the plan, plan participant or beneficiary, or IRA owner. The 2010 Proposal also provided that, for purposes of the fiduciary definition, relevant fees included any direct or indirect fees received by the adviser or an affiliate from any source. Direct fees are payments made by the advice recipient to the adviser including transaction-based fees, such as brokerage, mutual fund or insurance sales commissions. Indirect fees are payments to the adviser from any source other than the advice recipient such as revenue sharing payments from a mutual fund.

The 2010 Proposal included specific carve-outs for the following actions that the Department believed should not result in fiduciary status. In particular, a person would not have become a fiduciary by—

1. Providing recommendations as a seller or purchaser with interests adverse to the plan, its participants, or IRA owners, if the advice recipient reasonably should have known that the adviser was not providing impartial investment advice and the adviser had not acknowledged fiduciary status.

2. Providing investment education information and materials in connection with an individual account plan.

3. Marketing or making available a menu of investment alternatives that a plan fiduciary could choose from, and providing general financial information to assist in selecting and monitoring those investments, if these activities include a written disclosure that the adviser was not providing impartial investment advice.

4. Preparing reports necessary to comply with ERISA, the Code, or regulations or forms issued thereunder, unless the report valued assets that lack a generally recognized market, or served as a basis for making plan distributions.

The 2010 Proposal applied to the definition of an ''investment advice fiduciary'' in section 4975(e)(3)(B) of the Code as well as to the parallel ERISA definition. These provisions apply to both certain ERISA covered plans, and certain non-ERISA plans such as individual retirement accounts.

[10] U.S. Department of Labor, *Private Pension Plan Bulletin Abstract of 2012 Form 5500 Annual Reports,* (Jan. 2015), at *http://www.dol.gov/ebsa/PDF/2012pensionplanbulletin.PDF.*

[11] U.S. Department of Labor, *Private Pension Plan Bulletin Abstract of 1999 Form 5500 Annual Reports,* Number 12, Summer 2004 (Apr. 2008), at *http://www.dol.gov/ebsa/PDF/1999pensionplanbulletin.PDF.*

[12] Brien, Michael J., and Constantijn W.A. Panis. Analysis of Financial Asset Holdings of Households on the United States: 2013 Update. Advanced Analytic Consulting Group and Deloitte, Report Prepared for the U.S. Department of Labor, 2014.

In the preamble to the 2010 Proposal, the Department also noted that it had previously interpreted the 1975 regulation as providing that a recommendation to a plan participant on how to invest the proceeds of a contemplated plan distribution was not fiduciary investment advice. Advisory Opinion 2005–23A (Dec. 7, 2005). The Department specifically asked for comments as to whether the final rule should include such recommendations as fiduciary advice.

The 2010 Proposal prompted a large number of comments and a vigorous debate. As noted above, the Department made special efforts to encourage the regulated community's participation in this rulemaking. In addition to an extended comment period, the Department held a two-day public hearing. Additional time for comments was allowed following the hearing and publication of the hearing transcript on the Department's Web site and Department representatives held numerous meetings with interested parties. Many of the comments concerned the Department's conclusions regarding the likely economic impact of the proposal, if adopted. A number of commenters urged the Department to undertake additional analysis of expected costs and benefits particularly with regard to the 2010 Proposal's coverage of IRAs. After consideration of these comments and in light of the significance of this rulemaking to the retirement plan service provider industry, plan sponsors and participants, beneficiaries and IRA owners, the Department decided to take more time for review and to issue a new proposed regulation for comment.

D. The New Proposal

The new proposed rule makes many revisions to the 2010 Proposal, although it also retains aspects of that proposal's essential framework. The new proposal broadly updates the definition of fiduciary investment advice, and also provides a series of carve-outs from the fiduciary investment advice definition for communications that should not be viewed as fiduciary in nature. The definition generally covers the following categories of advice: (1) Investment recommendations, (2) investment management recommendations, (3) appraisals of investments, or (4) recommendations of persons to provide investment advice for a fee or to manage plan assets. Persons who provide such advice fall within the general definition of a fiduciary if they either (a) represent that they are acting as a fiduciary under ERISA or the Code or (b) provide the advice pursuant to an agreement, arrangement, or understanding that the advice is individualized or specifically directed to the recipient for consideration in making investment or investment management decisions regarding plan assets.

The new proposal includes several carve-outs for persons who do not represent that they are acting as ERISA fiduciaries, some of which were included in some form in the 2010 Proposal but many of which were not. Subject to specified conditions, these carve-outs cover—

(1) Statements or recommendations made to a ''large plan investor with financial expertise'' by a counterparty acting in an arm's length transaction;

(2) offers or recommendations to plan fiduciaries of ERISA plans to enter into a swap or security-based swap that is regulated under the Securities Exchange Act or the Commodity Exchange Act;

(3) statements or recommendations provided to a plan fiduciary of an ERISA plan by an employee of the plan sponsor if the employee receives no fee beyond his or her normal compensation;

(4) marketing or making available a platform of investment alternatives to be selected by a plan fiduciary for an ERISA participant-directed individual account plan;

(5) the identification of investment alternatives that meet objective criteria specified by a plan fiduciary of an ERISA plan or the provision of objective financial data to such fiduciary;

(6) the provision of an appraisal, fairness opinion or a statement of value to an ESOP regarding employer securities, to a collective investment vehicle holding plan assets, or to a plan for meeting reporting and disclosure requirements; and

(7) information and materials that constitute ''investment education'' or ''retirement education.''

The new proposal applies the same definition of ''investment advice'' to the definition of ''fiduciary'' in section 4975(e)(3) of the Code and thus applies to investment advice rendered to IRAs. ''Plan'' is defined in the new proposal to mean any employee benefit plan described in section 3(3) of the Act and any plan described in section 4975(e)(1)(A) of the Code. For ease of reference in this proposal, the term ''IRA'' has been inclusively defined to mean any account described in Code section 4975(e)(1)(B) through (F), such as a true individual retirement account described under Code section 408(a) and a health savings account described in section 223(d) of the Code.[13]

Many of the differences between the new proposal and the 2010 Proposal reflect the input of commenters on the 2010 Proposal as part of the public notice and comment process. For example, some commenters argued that the 2010 Proposal swept too broadly by making investment recommendations fiduciary in nature simply because the adviser was a plan fiduciary for purposes unconnected with the advice or an investment adviser under the Advisers Act. In their view, such status-based criteria were in tension with the Act's functional approach to fiduciary status and would have resulted in unwarranted and unintended compliance issues and costs. Other commenters objected to the lack of a requirement for these status-based categories that the advice be individualized to the needs of the advice recipient. The new proposal incorporates these suggestions: An adviser's status as an investment adviser under the Advisers Act or as an ERISA fiduciary for reasons unrelated to advice are no longer factors in the definition. In addition, unless the adviser represents that he or she is a fiduciary with respect to advice, the advice must be provided pursuant to an agreement, arrangement, or understanding that the advice is individualized or specifically directed to the recipient to be treated as fiduciary advice.

Furthermore, the carve-outs that treat certain conduct as non-fiduciary in nature have been modified, clarified, and expanded in response to comments. For example, the carve-out for certain valuations from the definition of fiduciary investment advice has been modified and expanded. Under the 2010 Proposal, appraisals and valuations for compliance with certain reporting and disclosure requirements were not treated as fiduciary advice. The new proposal additionally provides a carve-out from fiduciary treatment for appraisal and fairness opinions for ESOPs regarding employer securities. Although, the Department remains concerned about valuation advice concerning an ESOP's purchase of employer stock and about a plan's reliance on that advice, the Department has concluded that the concerns regarding valuations of closely held employer stock in ESOP transactions raise unique issues that are more

[13] As discussed below in Section E. Coverage of IRAs and Other Non-ERISA Plans, in recognition of differences among the various types of non-ERISA plan arrangements described in Code section 4975(e)(1)(B) through (F), the Department solicits comments on whether it is appropriate for the regulation to cover the full range of these arrangements. These non-ERISA plan arrangements are tax favored vehicles under the Code like IRAs, but are not intended for retirement savings.

appropriately addressed in a separate regulatory initiative. Additionally, the carve-out for valuations conducted for reporting and disclosure purposes has been expanded to include reporting and disclosure obligations outside of ERISA and the Code, and is applicable to both ERISA plans and IRAs. Many other modifications to the other carve-outs from fiduciary status, as well as new carve-outs and prohibited transaction exemptions, are described below in Section IV—''The Provisions of the New Proposal.''

III. Coordination With Other Federal Agencies

Many comments to the 2010 rulemaking emphasized the need to harmonize the Department's efforts with rulemaking activities under the Dodd-Frank Wall Street Reform and Consumer Protection Act, Pub. Law No. 111–203, 124 Stat. 1376 (2010), (Dodd-Frank Act), in particular, the Security and Exchange Commission's (SEC) standards of care for providing investment advice and the Commodity Futures Trading Commission's (CFTC) business conduct standards for swap dealers. While the 2010 Proposal discussed statutes over which the SEC and CFTC have jurisdiction, it did not specifically describe inter-agency coordination efforts. In addition, commenters questioned the adequacy of coordination with other agencies regarding IRA products and services. They argued that subjecting SEC-regulated investment advisers and broker-dealers to a special set of ERISA rules for plans and IRAs could lead to additional costs and complexities for individuals who may have several different types of accounts at the same financial institution some of which may be subject only to the SEC rules, and others of which may be subject to both SEC rules and new regulatory requirements under ERISA.

In the course of developing the new proposal and the related proposed prohibited transaction exemptions, the Department has consulted with staff of the SEC and other regulators on an ongoing basis regarding whether the proposals would subject investment advisers and broker-dealers who provide investment advice to requirements that create an undue compliance burden or conflict with their obligations under other federal laws. As part of this consultative process, SEC staff has provided technical assistance and information with respect to retail investors, the marketplace for investment advice and coordinating, to the extent possible, the agencies' separate regulatory provisions and responsibilities. As the Department moves forward with this project in accordance with the specific provisions of ERISA and the Code, it will continue to consult with staff of the SEC and other regulators on its proposals and their impact on retail investors and other regulatory regimes. One result of these discussions, particularly with staff of the CFTC and SEC, is the new provision at paragraph (b)(1)(ii) of the proposed regulations concerning counterparty transactions with swap dealers, major swap participants, security-based swap dealers, and major security-based swap participants. Under the terms of that paragraph, such persons would not be treated as ERISA fiduciaries merely because, when acting as counterparties to swap or security-based swap transactions, they give information and perform actions required for compliance with the requirements of the business conduct standards of the Dodd-Frank Act and its implementing regulations.

In pursuing these consultations, the Department has aimed to coordinate and minimize conflicting or duplicative provisions between ERISA, the Code and federal securities laws, to the extent possible. However, the governing statutes do not permit the Department to make the obligations of fiduciary investment advisers under ERISA and the Code identical to the duties of advice providers under the securities laws. ERISA and the Code establish consumer protections for some investment advice that does not fall within the ambit of federal securities laws, and vice versa. Even if each of the relevant agencies were to adopt an identical definition of ''fiduciary'', the legal consequences of the fiduciary designation would vary between agencies because of differences in the specific duties and remedies established by the different federal laws at issue. ERISA and the Code place special emphasis on the elimination or mitigation of conflicts of interest and adherence to substantive standards of conduct, as reflected in the prohibited transaction rules and ERISA's standards of fiduciary conduct. The specific duties imposed on fiduciaries by ERISA and the Code stem from legislative judgments on the best way to protect the public interest in tax-preferred benefit arrangements that are critical to workers' financial and physical health. The Department has taken great care to honor ERISA and the Code's specific text and purposes.

At the same time, the Department has worked hard to understand the impact of the proposed rule on firms subject to the securities laws and other federal laws, and to take the effects of those laws into account so as to appropriately calibrate the impact of the rule on those firms. The proposed regulation reflects these efforts. In the Department's view, it neither undermines, nor contradicts, the provisions or purposes of the securities laws, but instead works in harmony with them. The Department has coordinated—and will continue to coordinate—its efforts with other federal agencies to ensure that the various legal regimes are harmonized to the fullest extent possible.

The Department has also consulted with the Department of the Treasury and the IRS, particularly on the subject of IRAs. Although the Department has responsibility for issuing regulations and prohibited transaction exemptions under section 4975 of the Code, which applies to IRAs, the IRS maintains general responsibility for enforcing the tax laws. The IRS' responsibilities extend to the imposition of excise taxes on fiduciaries who participate in prohibited transactions.[14] As a result, the Department and the IRS share responsibility for combating self-dealing by fiduciary investment advisers to tax-qualified plans and IRAs. Paragraph (e) of the proposed regulation, in particular, recognizes this jurisdictional intersection.

When the Department announced that it would issue a new proposal, it stated that it would consider proposing new and/or amended prohibited transaction exemptions to address the concerns of commenters about the broader scope of the fiduciary definition and its impact on the fee practices of brokers and other advisers. Commenters had expressed concern about whether longstanding exemptions granted by the Department allowing advisers, despite their fiduciary status under ERISA, to receive commissions in connection with mutual funds, securities and insurance products would remain applicable under the new rule. As explained more fully below, the Department is simultaneously publishing in the notice section of today's **Federal Register** proposed prohibited transaction class exemptions to address these concerns. The Department believes that existing exemptions and these new proposed exemptions would preserve the ability to engage in common fee arrangements, while protecting plan participants, beneficiaries and IRA owners from abusive practices that may result from conflicts of interest.

The terms of these new exemptions are discussed in more detail below and in the preambles to the proposed

[14] Reorganization Plan No. 4 of 1978.

exemptions. While the exemptions differ in terms and coverage, each imposes a ''best interest'' standard on fiduciary investment advisers. Thus, for example, the Best Interest Contract Exemption requires the investment advice fiduciary and associated financial institution to expressly agree to provide advice that is in the ''best interest'' of the advice recipient. As proposed, the best interest standard is intended to mirror the duties of prudence and loyalty, as applied in the context of fiduciary investment advice under sections 404(a)(1)(A) and (B) of ERISA. Thus, the ''best interest'' standard is rooted in the longstanding trust-law duties of prudence and loyalty adopted in section 404 of ERISA and in the cases interpreting those standards.

Accordingly, the Best Interest Contract Exemption provides:

> Investment advice is in the ''Best Interest'' of the Retirement Investor when the Adviser and Financial Institution providing the advice act with the care, skill, prudence, and diligence under the circumstances then prevailing that a prudent person would exercise based on the investment objectives, risk tolerance, financial circumstances and needs of the Retirement Investor, without regard to the financial or other interests of the Adviser, Financial Institution, any Affiliate, Related Entity, or other party.

This ''best interest'' standard is not intended to add to or expand the ERISA section 404 standards of prudence and loyalty as they apply to the provision of investment advice to ERISA covered plans. Advisers to ERISA-covered plans are already required to adhere to the fundamental standards of prudence and loyalty, and can be held accountable for violations of the standards. Rather, the primary impact of the ''best interest'' standard is on the IRA market. Under the Code, advisers to IRAs are subject only to the prohibited transaction rules. Incorporating the best interest standard in the proposed Best Interest Contract Exemption effectively requires advisers to comply with these basic fiduciary standards as a condition of engaging in transactions that would otherwise be prohibited because of the conflicts of interest they create. Additionally, the exemption ensures that IRA owners and investors have a contract-based claim to hold their fiduciary advisers accountable if they violate these basic obligations of prudence and loyalty. As under current law, no private right of action under ERISA is available to IRA owners.

IV. The Provisions of the New Proposal

The new proposal would amend the definition of investment advice in 29 CFR 2510.3–21 (1975) of the regulation to replace the restrictive five-part test with a new definition that better comports with the statutory language in ERISA and the Code.[15] As explained below, the proposal accomplishes this by first describing the kinds of communications and relationships that would generally constitute fiduciary investment advice if the adviser receives a fee or other compensation. Rather than add additional elements that must be met in all instances, as under the current regulation, the proposal describes several specific types of advice or communications that would not be treated as investment advice. In the Department's view, this structure is faithful to the remedial purpose of the statute, but avoids burdening activities that do not implicate relationships of trust and expectations of impartiality.

A. Categories of Advice or Recommendations

Paragraph (a)(1) of the proposal sets forth the following types of advice, which, when provided in exchange for a fee or other compensation, whether directly or indirectly, and given under circumstances described in paragraph (a)(2), would be ''investment advice'' unless one of the carve-outs in paragraph (b) applies. The listed types of advice are—

(i) A recommendation as to the advisability of acquiring, holding, disposing of or exchanging securities or other property, including a recommendation to take a distribution of benefits or a recommendation as to the investment of securities or other property to be rolled over or otherwise distributed from the plan or IRA;

(ii) A recommendation as to the management of securities or other property, including recommendations as to the management of securities or other property to be rolled over or otherwise distributed from the plan or IRA;

(iii) An appraisal, fairness opinion, or similar statement whether verbal or written concerning the value of securities or other property if provided in connection with a specific transaction or transactions involving the acquisition, disposition, or exchange, of such securities or other property by the plan or IRA; or

(iv) A recommendation of a person who is also going to receive a fee or other compensation to provide any of the types of advice described in paragraphs (i) through (iii) above.

Except for the prong of the definition concerning appraisals and valuations discussed below, the proposal is structured so that communications must constitute a ''recommendation'' to fall within the scope of fiduciary investment advice. In that regard, as stated earlier in Section III concerning coordination with other Federal Agencies, the Department has consulted with staff of other agencies with rulemaking authority over investment advisers and broker-dealers. FINRA Policy Statement 01–23 sets forth guidelines to assist brokers in evaluating whether a particular communication could be viewed as a recommendation, thereby triggering application of FINRA's Rule 2111 that requires that a firm or associated person have a reasonable basis to believe that a recommended transaction or investment strategy involving a security or securities is suitable for the customer.[16] Although the regulatory context for the FINRA guidance is somewhat different, the Department believes that it provides useful standards and guideposts for distinguishing investment education from investment advice under ERISA. Accordingly, the Department specifically solicits comments on whether it should adopt some or all of the standards developed by FINRA in defining communications that rise to the level of a recommendation for purposes of distinguishing between investment education and investment advice under ERISA.

Additionally, as paragraph (d) of the proposal makes clear, the regulation does not treat the mere execution of a securities transaction at the direction of

[15] For purposes of readability, this proposed rulemaking republishes 29 CFR 2510.3–21 in its entirety, as revised, rather than only the specific amendments to this section. See 29 CFR 2510.3–21(d)—Execution of securities transactions.

[16] See also FINRA's Regulatory Notice 11–02, 12–25 and 12–55. Regulatory Notice 11–02 includes the following discussion:

> For instance, a communication's content, context and presentation are important aspects of the inquiry. The determination of whether a ''recommendation'' has been made, moreover, is an objective rather than subjective inquiry. An important factor in this regard is whether—given its content, context and manner of presentation—a particular communication from a firm or associated person to a customer reasonably would be viewed as a suggestion that the customer take action or refrain from taking action regarding a security or investment strategy. In addition, the more individually tailored the communication is to a particular customer or customers about a specific security or investment strategy, the more likely the communication will be viewed as a recommendation. Furthermore, a series of actions that may not constitute recommendations when viewed individually may amount to a recommendation when considered in the aggregate. It also makes no difference whether the communication was initiated by a person or a computer software program. These guiding principles, together with numerous litigated decisions and the facts and circumstances of any particular case, inform the determination of whether the communication is a recommendation for purposes of FINRA's suitability rule.

a plan or IRA owner as fiduciary activity. This paragraph remains unchanged from the 1975 regulation other than to update references to the proposal's structure. The definition's scope remains limited to advice relationships, as delineated in its text and does not impact merely administrative or ministerial activities necessary for a plan or IRA's functioning. It also does not apply to order taking where no advice is provided.

(1) Recommendations To Distribute Plan Assets

Paragraph (a)(1)(i) specifically includes recommendations concerning the investment of securities to be rolled over or otherwise distributed from the plan or IRA. Noting the Department's position in Advisory Opinion 2005–23A that it is not fiduciary advice to make a recommendation as to distribution options even if that is accompanied by a recommendation as to where the distribution would be invested, (Dec. 7, 2005), the 2010 Proposal did not include this type of advice, but the Department requested comments on whether it should be included in a final regulation. Some commenters stated that exclusion of this advice from the final rule would fail to protect participant accounts from conflicted advice in connection with one of the most significant financial decisions that participants make concerning retirement savings. Other commenters argued that including this advice would give rise to prohibited transactions that could disrupt the routine process that occurs when a worker leaves a job, contacts a financial services firm for help rolling over a 401(k) balance, and the firm explains the investments it offers and the benefits of a rollover.

The proposed regulation, if finalized, would supersede Advisory Opinion 2005–23A. Thus, recommendations to take distributions (and thereby withdraw assets from existing plan or IRA investments or roll over into a plan or IRA) or to entrust plan or IRA assets to particular money managers, advisers, or investments would fall within the scope of covered advice. However, as the proposal's text makes clear, one does not act as a fiduciary merely by providing participants with information about plan or IRA distribution options, including the consequences associated with the available types of benefit distributions. In this regard, the new proposal draws an important distinction between fiduciary investment advice and non-fiduciary investment information and educational materials. The Department believes that the proposal's treatment of such non-fiduciary educational and informational materials adequately covers the common types of distribution-related information that participants find useful, including information relating to annuitizations and other forms of lifetime income payment options, but welcomes input on other types of information that would help clarify the line between advice and education in this context.

(2) Recommendations as to the Management of Plan Investments

The preamble to the 2010 Proposal stated that the ''management of securities or other property'' would include advice and recommendations as to the exercise of rights appurtenant to shares of stock (*e.g.,* voting proxies). 75 FR 65266 (Oct. 22, 2010). The Department has long viewed the exercise of ownership rights as a fiduciary responsibility because of its material effect on plan investment goals. 29 CFR 2509.08–2 (2008). Consequently, individualized or specifically directed advice and recommendations on the exercise of proxy or other ownership rights are appropriately treated as fiduciary in nature. Accordingly, the proposed regulation's provision on advice regarding the management of securities or other property would continue to cover individualized advice or recommendations as to proxy voting and the management of retirement assets in paragraph (a)(1)(ii).

We received comments on the 2010 proposal seeking some clarification regarding its application to certain practices. In this regard, it is the Department's view that guidelines or other information on voting policies for proxies that are provided to a broad class of investors without regard to a client's individual interests or investment policy, and which are not directed or presented as a recommended policy for the plan or IRA to adopt, would not rise to the level of fiduciary investment advice under the proposal. Additionally, a recommendation addressed to all shareholders in a proxy statement would not result in fiduciary status on the part of the issuer of the statement or the person who distributes the proxy statement. These positions are clarified in the proposed regulation.

(3) Appraisals

The new proposal, like the current regulation which includes ''advice as to the value of securities or other property,'' continues to cover certain appraisals and valuation reports. However, it is considerably more focused than the 2010 Proposal. Responding to comments, the proposal in paragraph (a)(1)(iii) covers only appraisals, fairness opinions, or similar statements that relate to a particular transaction. The Department also expanded the 2010 Proposal's carve-out for general reports or statements of value provided to satisfy required reporting and disclosure rules under ERISA or the Code. The carve-out in the 2010 proposal covered general reports or statements of value that merely reflected the value of an investment of a plan or a participant or beneficiary, and provided for purposes of compliance with the reporting and disclosure requirements of ERISA, the Code, and the regulations, forms and schedules issued thereunder, unless the reports involved assets for which there was not a generally recognized market and served as a basis on which a plan could make distributions to plan participants and beneficiaries. The carve-out was broadened in this proposal to includes valuations provided solely for purposes of compliance with the reporting and disclosure provisions under the Act, the Code, and the regulations, forms and schedules issued thereunder, or any applicable reporting or disclosure requirement under a Federal or state law, or rule or regulation or self-regulatory organization (*e.g.,* FINRA) without regard to the type of asset involved. In this manner, the new proposal focuses on instances where the plan or IRA owner is looking to the appraiser for advice on the market value of an asset that the investor is considering to acquire, dispose, or exchange. In many cases the most important investment advice that an investor receives is advice as to how much it can or should pay for hard-to-value assets. In response to comments, the proposal also contains an entirely new carve-out at paragraph (b)(5)(ii) specifically addressing valuations or appraisals provided to an investment fund (*e.g.,* collective investment fund or pooled separate account) holding assets of various investors in addition to at least one plan or IRA. Also, as mentioned, the Department has decided not to extend fiduciary coverage to valuations or appraisals for ESOPs relating to employer securities at this time because the Department has concluded that its concerns in this space raise unique issues that are more appropriately addressed in a separate regulatory initiative. The proposal's carve-outs do not apply, however, if the provider of the valuation represents or acknowledges that it is acting as a fiduciary with respect to the advice.

Some representatives of the appraisal industry submitted comments on the 2010 Proposal arguing that ERISA's fiduciary duty to act solely in the interest of the plan and its participants and beneficiaries is inconsistent with the duty of appraisers to provide objective, independent value determinations. The Department disagrees. A biased or inaccurate appraisal does not help a plan, a participant or a beneficiary make prudent investment decisions. Like other forms of investment advice, an appraisal is a tool for plan fiduciaries, participants, beneficiaries, and IRA owners to use in deciding what price to pay for assets and whether to accept or decline proposed transactions. An appraiser complies with his or her obligations as an appraiser—and as a loyal fiduciary—by giving plan fiduciaries or participants an impartial and accurate assessment of the value of an asset in accordance with appraisers' professional standard of care. Nothing in ERISA or this regulation should be read as compelling an appraiser to slant valuation opinions to reflect what the plan wishes the asset were worth rather than what it is really worth. As stated in the preamble to the 2010 Proposal, the Department would expect a fiduciary appraiser's determination of value to be unbiased, fair and objective and to be made in good faith based on a prudent investigation under the prevailing circumstances then known to the appraiser. In the Department's view, these fiduciary standards are fully consistent with professional standards, such as the Uniform Standards of Professional Appraisal Practice (USPAP).[17]

(4) Recommendations of a Person To Provide Investment Advice or Management Services

The proposal would treat recommendations on the selection of investment managers or advisers as fiduciary investment advice. In the Department's view, the current regulation already covers such advice. The proposal simply revises the regulation's text to remove any possible ambiguity. The Department believes that such advice should be treated as fiduciary in nature if provided under the circumstances in paragraph (a)(1)(iv) and for direct or indirect compensation. Covered advice would include recommendations of persons to perform asset management services or to make investment recommendations. Advice as to the identity of the person entrusted with investment authority over retirement assets is often critical to the proper management and investment of those assets. On the other hand, general advice as to the types of qualitative and quantitative criteria to consider in hiring an investment manager would not rise to the level of a recommendation of a person to manage plan investments nor would a trade journal's endorsement of an investment manager. Similarly, the proposed regulation would not cover recommendations of administrative service providers, property managers, or other service providers who do not provide investment services.

B. The Circumstances Under Which Advice Is Provided

As provided in paragraph (a)(2) of the proposal, unless a carve-out applies, a category of advice listed in the proposal would constitute ''investment advice'' if the person providing the advice, either directly or indirectly (*e.g.,* through or together with any affiliate)—

(i) Represents or acknowledges that it is acting as a fiduciary within the meaning of the Act or Code with respect to the advice described in paragraph (a)(1); or

(ii) Renders the advice pursuant to a written or verbal agreement, arrangement or understanding that the advice is individualized to, or that such advice is specifically directed to, the advice recipient for consideration in making investment or management decisions with respect to securities or other property of the plan or IRA.

Under paragraph (a)(2)(i), advisers who claim fiduciary status under ERISA or the Code in providing advice would be taken at their word. They may not later argue that the advice was not fiduciary in nature. Nor may they rely upon the carve-outs described in paragraph (b) on the scope of the definition of fiduciary investment advice.

The 2010 Proposal provided that investment recommendations provided by an investment adviser under the Advisers Act would, in the absence of a carve-out, automatically be treated as investment advice. In response to comments, the new proposal drops this provision. Thus, the proposal avoids making such persons fiduciaries based solely on their or an affiliate's status as an investment adviser under the Advisers Act. Instead, their fiduciary status would be determined by reference to the same functional test that applies to all persons under the regulation.

Paragraph (a)(2)(ii) of the proposal avoids treating recommendations made to the general public, or to no one in particular, as investment advice and thus addresses concerns that the general circulation of newsletters, television talk show commentary, or remarks in speeches and presentations at financial industry educational conferences would result in the person being treated as a fiduciary. This paragraph requires an agreement, arrangement, or understanding that advice is directed to, a specific recipient for consideration in making investment decisions. The parties need not have a meeting of the minds on the extent to which the advice recipient will actually rely on the advice, but they must agree or understand that the advice is individualized or specifically directed to the particular advice recipient for consideration in making investment decisions. In this respect, paragraph (a)(2)(ii) differs significantly from its counterpart in the 2010 Proposal. In particular, and in response to comments, the proposal does not require that advice be individualized to the needs of the plan, participant or beneficiary or IRA owner if the advice is specifically directed to such recipient. Under the proposal, advisers could not specifically direct investment recommendations to individual persons, but then deny fiduciary responsibility on the basis that they did not, in fact, consider the advice recipient's individual needs or intend that the recipient base investment decisions on their recommendations. Nor could they continue the practice of advertising advice or counseling that is one-on-one or that a reasonable person would believe would be tailored to their individual needs and then disclaim that the recommendations are fiduciary investment advice in boilerplate language in the advertisement or in the paperwork provided to the client.

Like the 2010 Proposal, and unlike the 1975 regulation, the new proposal does not require that advice be provided on a regular basis. Investment advice that meets the requirements of the proposal, even if provided only once, can be critical to important investment decisions. If the adviser received a direct or indirect fee in connection with its advice, the advice recipients should reasonably expect adherence to fiduciary standards on the same terms as other retirement investors who get

[17] A number of commenters also pointed to such professional standards as alternatives to fiduciary treatment under ERISA. While the Department believes that such professional standards are fully consistent with the fiduciary duties, the rights, remedies and sanctions under both ERISA and the Code importantly turn on fiduciary status, and advice on the value of an asset is often the most critical investment advice a plan receives. As a result, treating appraisals as fiduciary advice provides an additional layer of protection for consumers without conflicting with the duties of appraisers.

recommendations from the adviser on a more routine basis.

C. Carve-Outs From the General Definition

The Department recognizes that in many circumstances, plan fiduciaries, participants, beneficiaries, and IRA owners may receive recommendations or appraisals that, notwithstanding the general definition set forth in paragraph (a) of the proposal, should not be treated as fiduciary investment advice. Accordingly, paragraph (b) contains a number of specific carve-outs from the scope of the general definition. The carve-out at paragraph (b)(5) of the proposal concerning financial reports and valuations was discussed above in connection with appraisals. The carve-out in paragraph (b)(5)(iii) covers communications to a plan, a plan fiduciary, a plan participant or beneficiary, an IRA or IRA owner solely for purposes of compliance with the reporting and disclosure provisions under the Act, the Code, and the regulations, forms and schedules issued thereunder, or any applicable reporting or disclosure requirement under a Federal or state law, rule or regulation or self-regulatory organization rule or regulation. The carve-out in paragraph (b)(6) covers education. The other carve-outs are limited to communications with plans and plan fiduciaries and do not cover communications to participants, beneficiaries or IRA owners. These more limited carve-outs are described more fully below. In each instance, the proposed carve-outs are for communications that the Department believes Congress did not intend to cover as fiduciary ''investment advice'' and that parties would not ordinarily view as communications characterized by a relationship of trust or impartiality. None of the carve-outs apply where the adviser represents or acknowledges that it is acting as a fiduciary under ERISA with respect to the advice.

(1) Seller's and Swap Carve-Outs

(a) The ''Seller's Carve-Out'' [18]

Paragraph (b)(1)(i) of the proposed regulation provides a carve-out from the general definition for incidental advice provided in connection with an arm's length sale, purchase, loan, or bilateral contract between an expert plan investor and the adviser. It also applies in connection with an offer to enter into such a transaction or when the person providing the advice is acting as a representative, such as an agent, for the plan's counterparty. This carve-out is subject to the following conditions.

First, the person must provide advice to an ERISA plan fiduciary who is independent of such person and who exercises authority or control respecting the management or disposition of the plan's assets, with respect to an arm's length sale, purchase, loan or bilateral contract between the plan and the counterparty, or with respect to a proposal to enter into such a sale, purchase, loan or bilateral contract.

Second, either of two alternative sets of conditions must be met. Under alternative one, prior to providing any recommendation with respect to the transaction, such person:

(1) Obtains a written representation from the plan fiduciary that he/she is a fiduciary who exercises authority or control with respect to the management or disposition of the employee benefit plan's assets (as described in section 3(21)(A)(i) of the Act), that the employee benefit plan has 100 or more participants covered under the plan, and that the fiduciary will not rely on the person to act in the best interests of the plan, to provide impartial investment advice, or to give advice in a fiduciary capacity;

(2) fairly informs the plan fiduciary of the existence and nature of the person's financial interests in the transaction;

(3) does not receive a fee or other compensation directly from the plan, or plan fiduciary, for the provision of investment advice in connection with the transaction (this does not preclude a person from receiving a fee or compensation for other services);

(4) knows or reasonably believes that the independent plan fiduciary has sufficient expertise to evaluate the transaction and to determine whether the transaction is prudent and in the best interest of the plan participants (such person may rely on written representations from the plan or the plan fiduciary to satisfy this condition).

The second alternative applies if the person knows or reasonably believes that the independent plan fiduciary has responsibility for managing at least $100 million in employee benefit plan assets (for purposes of this condition, when dealing with an individual employee benefit plan, a person may rely on the information on the most recent Form 5500 Annual Return/Report filed by the plan to determine the value of plan assets, and, in the case of an independent fiduciary acting as an asset manager for multiple employee benefit plans, a person may rely on representations from the independent plan fiduciary regarding the value of employee benefit plan assets under management). In that circumstance, the adviser need not obtain written representations from its counterparty to avail itself of the carve-out, but must fairly inform the independent plan fiduciary that the adviser is not undertaking to provide impartial investment advice, or to give advice in a fiduciary capacity; and cannot receive a fee or other compensation directly from the plan, or plan fiduciary, for the provision of investment advice in connection with the transaction. In that circumstance, the adviser must also reasonably believe that the independent plan fiduciary has sufficient expertise to prudently evaluate the transaction.

The overall purpose of this carve-out is to avoid imposing ERISA fiduciary obligations on sales pitches that are part of arm's length transactions where neither side assumes that the counterparty to the plan is acting as an impartial trusted adviser, but the seller is making representations about the value and benefits of proposed deals. Under appropriate circumstances, reflected in the conditions to this carve-out, these counterparties to the plan do not suggest that they are an impartial fiduciary and plans do not expect a relationship of undivided loyalty or trust. Both sides of such transactions understand that they are acting at arm's length, and neither party expects that recommendations will necessarily be based on the buyer's best interests. In such a sales transaction, the buyer understands that it is buying an investment product, not advice about whether it is a good product, from a seller who has opposing financial interests. The seller's invitation to buy the product is understood as a sales pitch, not a recommendation. Also, a representative for the plan's counterparty, such as a broker, in such a transaction, would be able to use the carve-out if the conditions are met.

Although the 2010 Proposal also had a carve-out for sellers and other counterparties, the carve-out in the new proposal is significantly different. The changes are designed to ensure that the carve-out appropriately distinguishes incidental advice as part of an arm's length transactions with no expectation of trust or acting in the customer's best interest, from those instances of advice where customers may be expecting unbiased investment advice that is in their best interest. For example, the seller's carve-out is unavailable to an adviser if the plan directly pays a fee for investment advice. If a plan expressly

[18] Although the preamble uses the shorthand expression ''seller's carve-out,'' we note that the carve-out provided in paragraph (b)(1)(i) of the proposal is not limited to sales but rather would apply to incidental advice provided in connection with an arm's length sale, purchase, loan, or bilateral contract between a plan investor with financial expertise and an adviser.

pays a fee for advice, the essence of the relationship is advisory, and the statute clearly contemplates fiduciary status. Thus, a service provider may not charge the plan a direct fee to act as an adviser, and then disclaim responsibility as a fiduciary adviser by asserting that he or she is merely an arm's length counterparty.

Commenters on the 2010 Proposal differed on whether the carve-out should apply to transactions involving plan participants, beneficiaries or IRA owners. After carefully considering the issue and the public comments, the Department does not believe such a carve-out can or should be crafted to cover recommendations to retail investors, including small plans, IRA owners and plan participants and beneficiaries. As a rule, investment recommendations to such retail customers do not fit the ''arm's length'' characteristics that the seller's carve-out is designed to preserve. Recommendations to retail investors and small plan providers are routinely presented as advice, consulting, or financial planning services. In the securities markets, brokers' suitability obligations generally require a significant degree of individualization. Research has shown that disclaimers are ineffective in alerting retail investors to the potential costs imposed by conflicts of interest, or the fact that advice is not necessarily in their best interest, and may even exacerbate these costs.[19] Most retail investors and many small plan sponsors are not financial experts, are unaware of the magnitude and impact of conflicts of interest, and are unable effectively to assess the quality of the advice they receive. IRA owners are especially at risk because they lack the protection of having a menu of investment options chosen by a plan fiduciary who is charged to protect the interests of the IRA owner. Similarly, small plan sponsors are typically experts in the day-to-day business of running an operating company, not in managing financial investments for others. In this retail market, a seller's carve-out would run the risk of creating a loophole that would result in the rule failing to improve consumer protections by permitting the same type of boilerplate disclaimers that some advisers now use to avoid fiduciary status under the current ''five-part test'' regulation. Persons making investment recommendations should be required to put the interests of the investors they serve ahead of their own. The Department has addressed legitimate concerns about preserving existing fee practices and minimizing market disruptions through proposed prohibited transaction exemptions detailed below, rather than through a blanket carve-out from fiduciary status.

Moreover, excluding retail investors from the seller's carve-out is consistent with recent congressional action, the Pension Protection Act of 2006 (PPA). Specifically, the PPA created a new statutory exemption that allows fiduciaries giving investment advice to individuals (pension plan participants, beneficiaries and IRA owners) to receive compensation from investment vehicles that they recommend in certain circumstances. 29 U.S.C. 1108(b)(14); 26 U.S.C. 4975(d)(17). Recognizing the risks presented when advisers receive fees from the investments they recommend to individuals, Congress placed important constraints on such advice arrangements that are calculated to limit the potential for abuse and self-dealing, including requirements for fee-leveling or the use of independently certified computer models. The Department has issued regulations implementing this provision at 29 CFR 2550.408g–1 and 408g–2. Including retail investors in the seller's carve-out would undermine the protections for retail investors that Congress required under this PPA provision.

Although the seller's carve-out may not be available in the retail market, the proposal is intended to ensure that small plan fiduciaries, plan participants, beneficiaries and IRA owners would be able to obtain essential information regarding important decisions they make regarding their investments without the providers of that information crossing the line into fiduciary status. Under the platform provider carve-out under paragraph (b)(3), platform providers (*i.e.,* persons that provide access to securities or other property through a platform or similar mechanism) and persons that help plan fiduciaries select or monitor investment alternatives for their plans can perform those services without incurring fiduciary status. Similarly, under the investment education carve-out of paragraph (b)(6), general plan information, financial, investment and retirement information, and information and education regarding asset allocation models would all be available to a plan, plan fiduciary, participant, beneficiary or IRA owner and would not constitute the provision of investment advice, irrespective of who receives that information. The Department invites comments on whether the proposed seller's carve-out should be available for advice given directly to plan participants, beneficiaries, and IRA owners. Further, the Department invites comments on the scope of the seller's carve-out and whether the plan size limitation of 100 plan participants and 100 million dollar asset requirement in the proposal are appropriate conditions or whether other conditions would be more appropriate proxies for identifying persons with sufficient investment-related expertise to be included in a seller's carve-out.[20] The Department is also interested in whether existing and proposed prohibited transaction exemptions eliminate or mitigate the need for any seller's carve-out.

(b) Swap and Security-Based Swap Transactions

Paragraph (b)(1)(ii) of the proposal specifically addresses advice and other communications by counterparties in connection with certain swap or security-based swap transactions under the Commodity Exchange Act or the Securities Exchange Act. This broad class of financial transactions is defined and regulated under amendments to the Commodity Exchange Act and the Securities Exchange Act by the Dodd-Frank Act. Section 4s(h) of the Commodity Exchange Act (7 U.S.C. 6s(h)), and section 15F of the Securities

[19] Loewenstein, George, Daylian Cain, Sunita Sah, *The Limits of Transparence: Pitfalls and Potential of Disclosing Conflicts of Interest,* American Economic Review: Papers and Proceedings 101, no. 3 (2011).

[20] The proposed thresholds of 100 or more participants and assets of $100 million are consistent with thresholds used for similar purposes under existing rules and practices. For example, administrators of plans with 100 or more participants, unlike smaller plans, generally are required to report to the Department details on the identity, function, and compensation of their services providers; file a schedule of assets held for investments; and submit audit reports to the Department. Smaller plans are not subject to these same filing requirements that are imposed on large plans. The vast majority of plans with fewer than 100 participants have 10 or less participants. They are much more similar to individual retail investors than to large financially sophisticated institutional investors, who employ lawyers and have the time and expertise to scrutinize advice they receive for bias. Similarly, Congress established a $100 million asset threshold in enacting the PPA statutory cross-trading exemption under ERISA section 408(b)(19). In the transactions covered by 408(b)(19), an investment manager has discretion with respect to separate client accounts that are on opposite sides of the trade. The cross trade can create efficiencies for both clients, but it also gives rise to a prohibited transaction under ERISA § 406(b)(2) because the adviser or manager is ''representing'' both sides of the transaction and, therefore, has a conflict of interest. The exemption generally allows an investment manager to effect cash purchases and sales of securities for which market quotations are readily available between large sophisticated plans with at least $100 million in assets and another account under management by the investment manager, subject to certain conditions. In this context, the $100 million threshold serves as a proxy for identifying institutional fiduciaries that can be expected to have the expertise to protect their own interests in the conflicted transaction.

Exchange Act of 1934 (15 U.S.C. 78o–10(h) establishes similar business conduct standards for dealers and major participants in swaps or security-based swaps. Special rules apply for transactions involving ''special entities,'' a term that includes employee benefit plans under ERISA, but not IRAs and other non-ERISA plans.

In outline, paragraph (b)(1)(ii) of the proposal would allow swap dealers, security-based swap dealers, major swap participants and security-based major swap participants who make recommendations to plans to avoid becoming ERISA investment advice fiduciaries when acting as counterparties to a swap or security-based swap transaction. Under the swap carve out, if the person providing recommendations is a swap dealer or security-based swap dealer, it must not be acting as an adviser to the plan, within the meaning of the applicable business conduct standards regulations of the CFTC or the SEC. In addition, before providing any recommendations with respect to the transaction, the person providing recommendations must obtain a written representation from the independent plan fiduciary, that the fiduciary will not rely on recommendations provided by the person.

Under the Commodity Exchange Act, swap dealers or major swap participants that act as counterparties to ERISA plans, must have a reasonable basis to believe that the plans have independent representatives who are fiduciaries under ERISA. 7 U.S.C. 6s(h)(5). Similar requirements apply for security-based swap transactions. 15 U.S.C 78o–10(h)(4) and (5). The CFTC has issued a final rule to implement these requirements and the SEC has issued a proposed rule that would cover security-based swaps. 17 CFR 23.400 to 23.451 (2012).

Paragraph (b)(1)(ii) reflects the Department's coordination of its efforts with staff of the SEC and CFTC, and is intended to provide a clear road-map for swap counterparties to avoid ERISA fiduciary status in arm's length transactions with plans. The provision addresses commenters' concerns that the conduct required for compliance with the Dodd-Frank Act's business conduct standards could constitute fiduciary investment advice under ERISA even in connection with arm's length transactions with plans that are separately represented by independent fiduciaries who are not looking to their counterparties for disinterested advice. If that were the case, swaps and security-based swaps with plans would often constitute prohibited transactions under ERISA. Commenters also argued that their obligations under the business conduct standards could effectively preclude them from relying on the carve-out for counterparties in the 2010 Proposal. Although the Department does not agree that the carve-out in the 2010 Proposal would have been unavailable to plan's swap counterparty (see letter dated April 28, 2011, to CFTC Chairman Gary Gensler from EBSA's Assistant Secretary Phyllis Borzi), the separate proposed carve-out for swap and security-based swap transactions in the proposal should avoid any uncertainty.[21] The Department will continue to coordinate its efforts with staff of the SEC and CFTC to ensure that any final regulation is consistent with the agencies' work in connection with the Dodd-Frank Act's business conduct standards.

(2) Employees of the Plan Sponsor

The proposal at paragraph (b)(2) provides that employees of a plan sponsor of an ERISA plan would not be treated as investment advice fiduciaries with respect to advice they provide to the fiduciaries of the sponsor's plan as long as they receive no compensation for the advice beyond their normal compensation as employees of the plan sponsor. This carve-out from the scope of the fiduciary investment advice definition recognizes that internal employees, such as members of a company's human resources department, routinely develop reports and recommendations for investment committees and other named fiduciaries of the sponsors' plans, without acting as paid fiduciary advisers. The carve-out responds to and addresses the concerns of commenters who said that these personnel should not be treated as fiduciaries because their advice is largely incidental to their duties on behalf of the plan sponsor and they receive no compensation for these advice-related functions.

(3) Platform Providers/Selection and Monitoring Assistance

The carve-out at paragraph (b)(3) of the proposal is directed to service providers, such as recordkeepers and third party administrators, that offer a ''platform'' or selection of investment vehicles to participant-directed individual account plans under ERISA. Under the terms of the carve-out, the plan fiduciaries must choose the specific investment alternatives that will be made available to participants for investing their individual accounts. The carve-out merely makes clear that persons would not act as investment advice fiduciaries simply by marketing or making available such investment vehicles, without regard to the individualized needs of the plan or its participants and beneficiaries, as long as they disclose in writing that they are not undertaking to provide impartial investment advice or to give advice in a fiduciary capacity.

Similarly, a separate provision at paragraph (b)(4) carves out certain common activities that platform providers may carry out to assist plan fiduciaries in selecting and monitoring the investment alternatives that they make available to plan participants. Under paragraph (b)(4), merely identifying offered investment alternatives meeting objective criteria specified by the plan fiduciary or providing objective financial data regarding available alternatives to the plan fiduciary would not cause a platform provider to be a fiduciary investment adviser. These two carve-outs are clarifying modifications to the corresponding provisions of the 2010 Proposal. They address certain common practices that have developed with the growth of participant-directed individual account plans and recognize circumstances where the platform provider and the plan fiduciary clearly understand that the provider has financial or other relationships with the offered investments and is not purporting to provide impartial investment advice. It also accommodates the fact that platform providers often provide general financial information that falls short of constituting actual investment advice or recommendations, such as information on the historic performance of asset classes and of the investments available through the provider. The carve-outs also reflect the Department's agreement with commenters that a platform provider who merely identifies investment alternatives using objective third-party criteria (*e.g.,* expense ratios, fund size, or asset type specified by the plan fiduciary) to assist in selecting and monitoring investment alternatives should not be considered to be rendering investment advice.

While recognizing the utility of the provisions in paragraphs (b)(3) and (b)(4) for the effective and efficient operation of plans by plan sponsors, plan fiduciaries and plan service providers, the Department reiterates its longstanding view, recently codified in 29 CFR 2550.404a–5(f) and 2550.404c–1(d)(2)(iv) (2010), that a fiduciary is always responsible for prudently selecting and monitoring providers of services to the plan or designated

[21] *http://www.dol.gov/ebsa/pdf/cftc20110428.pdf.*

investment alternatives offered under the plan.

Several commenters also asked the Department to clarify that the platform provider carve-out is available in the 403(b) plan marketplace. In the Department's view, a 403(b) plan that is subject to Title I of ERISA would be an individual account plan within the meaning of ERISA section 3(34) of the Act for purposes of the proposed regulation, so the platform provider carve-out would be available with respect to such plans.

Other commenters asked that the platform provider provision be generally extended to apply to IRAs. In the IRA context, however, there typically is no separate independent ''plan fiduciary'' who interacts with the platform provider to protect the interests of the account owners. As a result, it is much more difficult to conclude that the transaction is truly arm's length or to draw a bright line between fiduciary and non-fiduciary communications on investment options. Consequently, the proposed regulation declines to extend application of this carve-out to IRAs and other non-ERISA plans. As the Department continues its work on this regulatory project, however, it requests specific comment as to the types of platforms and options that may be offered to IRA owners, how they may be similar to or different from platforms offered in connection with participant-directed individual account plans, and whether it would be appropriate for service providers not to be treated as fiduciaries under this carve-out when marketing such platforms to IRA owners. We also invite comments, alternatively, on whether the scope of this carve-out should be limited to large plans, similar to the scope of the ''Seller's Carve-out'' discussed above.

As a corollary to the proposal's restriction of the applicability of the platform provider carve-out to only ERISA plans, the selection and monitoring assistance carve-out is similarly not available in the IRA and other non-ERISA plans context. Commenters on the platform provider restriction are encouraged to offer their views on the effect of this restriction in the non-ERISA plan marketplace.

(4) Investment Education

Paragraph (b)(6) of the proposed regulation is similar to a carve-out in the 2010 Proposal for the provision of investment education information and materials within the meaning of an earlier Interpretive Bulletin issued by the Department in 1996. 29 CFR 2509.96–1 (IB 96–1). Paragraph (b)(6) incorporates much of IB 96–1's operative text, but with the important exceptions explained below. Paragraph (b)(6) of the proposed regulation, if finalized, would supersede IB 96–1. Consistent with IB 96–1, paragraph (b)(6) makes clear that furnishing or making available the specified categories of information and materials to a plan, plan fiduciary, participant, beneficiary or IRA owner will not constitute the rendering of investment advice, irrespective of who provides the information (*e.g.,* plan sponsor, fiduciary or service provider), the frequency with which the information is shared, the form in which the information and materials are provided (*e.g.,* on an individual or group basis, in writing or orally, via a call center, or by way of video or computer software), or whether an identified category of information and materials is furnished or made available alone or in combination with other categories of investment or retirement information and materials identified in paragraph (b)(6), or the type of plan or IRA involved. As a departure from IB 96–1, a new condition of the carve-out for investment education is that the information and materials not include advice or recommendations as to specific investment products, specific investment managers, or the value of particular securities or other property. The paragraph reflects the Department's view that the statutory reference to ''investment advice'' is not meant to encompass general investment information and educational materials, but rather is targeted at more specific recommendations and advice on the investment of plan and IRA assets.

Similar to IB 96–1, paragraph (b)(6) of the proposed regulation divides investment education information and materials into four general categories: (i) Plan information; (ii) general financial, investment and retirement information; (iii) asset allocation models; and (iv) interactive investment materials. The proposed regulation in paragraph (b)(6)(v) also adopts the provision from IB 96–1 stating that there may be other examples of information, materials and educational services which, if furnished, would not constitute investment advice or recommendations within the meaning of the proposed regulation and that no inference should be drawn regarding materials or information which are not specifically included in paragraph (b)(6)(i) through (iv).

Although paragraph (b)(6) incorporates most of the relevant text of IB 96–1, there are important changes. One change from IB 96–1 is that paragraph (b)(6) makes clear that the distinction between non-fiduciary education and fiduciary advice applies equally to information provided to plan fiduciaries as well as information provided to plan participants and beneficiaries and IRA owners, and that it applies equally to participant-directed plans and other plans. In addition, the provision applies without regard to whether the information is provided by a plan sponsor, fiduciary, or service provider.

Based on public input received in connection with its joint examination of lifetime income issues with the Department of the Treasury, the Department is persuaded that additional guidance may help improve retirement security by facilitating the provision of information and education relating to retirement needs that extend beyond a participant's or beneficiary's date of retirement. Accordingly, paragraph (b)(6) of the proposal includes specific language to make clear that the provision of certain general information that helps an individual assess and understand retirement income needs past retirement and associated risks (*e.g.,* longevity and inflation risk), or explains general methods for the individual to manage those risks both within and outside the plan, would not result in fiduciary status under the proposal.[22]

[22] Although the proposal would formally remove IB 96–1 from the CFR, the Department notes that paragraph (e) of IB 96–1 provides generalized guidance under section 405 and 404(c) of ERISA with respect to the selection by employers and plan fiduciaries of investment educators and the lack of responsibility of employers and fiduciaries with respect to investment educators selected by participants. Specifically, paragraph (e) states:

As with any designation of a service provider to a plan, the designation of a person(s) to provide investment educational services or investment advice to plan participants and beneficiaries is an exercise of discretionary authority or control with respect to management of the plan; therefore, persons making the designation must act prudently and solely in the interest of the plan participants and beneficiaries, both in making the designation(s) and in continuing such designation(s). See ERISA sections 3(21)(A)(i) and 404(a), 29 U.S.C. 1002 (21)(A)(i) and 1104(a). In addition, the designation of an investment advisor to serve as a fiduciary may give rise to co-fiduciary liability if the person making and continuing such designation in doing so fails to act prudently and solely in the interest of plan participants and beneficiaries; or knowingly participates in, conceals or fails to make reasonable efforts to correct a known breach by the investment advisor. See ERISA section 405(a), 29 U.S.C. 1105(a). The Department notes, however, that, in the context of an ERISA section 404(c) plan, neither the designation of a person to provide education nor the designation of a fiduciary to provide investment advice to participants and beneficiaries would, in itself, give rise to fiduciary liability for loss, or with respect to any breach of part 4 of title I of ERISA, that is the direct and necessary result of a participant's or beneficiary's exercise of independent control. 29 CFR 2550.404c–1(d). The Department also notes that a plan sponsor or

As noted, another change is that the Department is not incorporating the provisions at paragraph (d)(3)(iii) and (4)(iv) of IB 96–1. Those provisions of IB 96–1 permit the use of asset allocation models that refer to specific investment products available under the plan or IRA, as long as those references to specific products are accompanied by a statement that other investment alternatives having similar risk and return characteristics may be available. Based on its experience with the IB 96–1 since publication, as well as views expressed by commenters to the 2010 Proposal, the Department now believes that, even when accompanied by a statement as to the availability of other investment alternatives, these types of specific asset allocations that identify specific investment alternatives function as tailored, individualized investment recommendations, and can effectively steer recipients to particular investments, but without adequate protections against potential abuse.[23]

In particular, the Department agrees with those commenters to the 2010 Proposal who argued that cautionary disclosures to participants, beneficiaries, and IRA owners may have limited effectiveness in alerting them to the merit and wisdom of evaluating investment alternatives not used in the model. In practice, asset allocation models concerning hypothetical individuals, and interactive materials which arrive at specific investment products and plan alternatives, can be indistinguishable to the average retirement investor from individualized recommendations, regardless of caveats. Accordingly, paragraphs (b)(6)(iii) and (iv) relating to asset allocation models and interactive investment materials preclude the identification of specific investment alternatives available under the plan or IRA in order for the materials described in those paragraphs to be considered investment education. Thus, for example, we would not treat an asset allocation model as mere education if it called for a certain percentage of the investor's assets to be invested in large cap mutual funds, and accompanied that proposed allocation with the identity of a specific fund or provider. In that circumstance, the adviser has made a specific investment recommendation that should be treated as fiduciary advice and adhere to fiduciary standards. Further, materials that identify specific plan investment alternatives also appear to fall within the definition of ''recommendation'' in paragraph (f)(1) of the proposal, and could result in fiduciary status on the part of a provider if the other provisions of the proposal are met. The Department believes that effective and useful asset allocation education materials can be prepared and delivered to participants and IRA owners without including specific investment products and alternatives available under the plan. The Department understands that not incorporating the provisions of IB 96–1 at paragraph (d)(3)(iii) and (4)(iv) into the proposal represents a significant change in the information and materials that may constitute investment education. Accordingly, the Department invites comments on whether this change is appropriate.[24]

D. Fee or Other Compensation

A necessary element of fiduciary status under section 3(21)(A)(ii) of ERISA is that the investment advice be for a ''fee or other compensation, direct or indirect.'' Consistent with the statute, paragraph (f)(6) of the proposed regulation defines this phrase to mean any fee or compensation for the advice received by the advice provider (or by an affiliate) from any source and any fee or compensation incident to the transaction in which the investment advice has been rendered or will be rendered. It further provides that the term ''fee or compensation'' includes, but is not limited to, brokerage fees, mutual fund sales, and insurance sales commissions.

Paragraph (c)(3) of the 2010 Proposal used similar language, but it also provided that the term included fees and compensation based on multiple transactions involving different parties. Commenters found this provision confusing and it does not appear in the new proposal. The provision was intended to confirm the Department's position that fees charged on a so-called ''omnibus'' basis (*e.g.,* compensation paid based on business placed or retained that includes plan or IRA business) would constitute fees and compensation for purposes of the rule.

Direct or indirect compensation also includes any compensation received by affiliates of the adviser that is connected to the transaction in which the advice was provided. For example, when a fiduciary adviser recommends that a participant or IRA owner invest in a mutual fund, it is not unusual for an affiliated adviser to the mutual fund to receive a fee. The receipt by the affiliate of advisory fees from the mutual fund is indirect compensation in connection with the rendering of investment advice to the participant.

Some commenters additionally suggested that call center employees should not be treated as investment advice fiduciaries where they are not specifically paid to provide investment advice and their compensation does not change based on their communications with participants and beneficiaries. The carve-out from the fiduciary investment advice definition for investment education provides guidelines under which call center staff and other employees providing similar investor assistance services may avoid fiduciary status. However, commenters stated that a specific carve-out for such call centers would provide a greater level of certainty so as not to inhibit mutual funds, insurance companies, broker-dealers, recordkeepers and other financial service providers from continuing to make such assistance available to participants and beneficiaries in 401(k) and similar participant-directed plans. In the Department's view, such a carve-out would be inappropriate. The fiduciary definition is intended to apply broadly to all persons who engage in the activities set forth in the regulation, regardless of job title or position, or whether the advice is rendered in person, in writing or by phone. If, in the performance of their jobs, call center employees make specific investment recommendations to plan participants or IRA owners under the circumstances

fiduciary would have no fiduciary responsibility or liability with respect to the actions of a third party selected by a participant or beneficiary to provide education or investment advice where the plan sponsor or fiduciary neither selects nor endorses the educator or advisor, nor otherwise makes arrangements with the educator or advisor to provide such services.

Unlike the remainder of the IB, this text does not belong in the investment advice regulation. Also, the principles articulated in paragraph (e) are generally understood and accepted such that retaining the paragraph as a stand-alone IB does not appear necessary or appropriate.

[23] When the Department issued IB 96–1, it expressed concern that service providers could effectively steer participants to a specific investment alternative by identifying only one particular fund available under the plan in connection with an asset allocation model. As a result, where it was possible to do so, the Department encouraged service providers to identify other investment alternatives within an asset class as part of a model. Ultimately, however, when asset allocation models and interactive investment materials identified any specific investment alternative available under the plan, the Department required an accompanying statement both indicating that other investment alternatives having similar risk and return characteristics may be available under the plan and identifying where information on those investment alternatives could be obtained. 61 FR 29586, 29587 (June 11, 1996).

[24] As indicated earlier in this Notice, the Department believes that FINRA's guidance in this area may provide useful standards and guideposts for distinguishing investment education from investment advice under ERISA. The Department specifically solicits comments on the discussion in FINRA's ''Frequently Asked Questions, FINRA Rule 2111 (Suitability)'' of the term ''recommendation'' in the context of asset allocation models and general investment strategies.

described in the proposal, it is appropriate to treat them, and possibly their employers, as fiduciaries unless they meet the conditions of one of the carve-outs set forth above.

E. Coverage of IRAs and Other Non-ERISA Plans

Certain provisions of Title I of ERISA, 29 U.S.C. 1001–1108, such as those relating to participation, benefit accrual, and prohibited transactions also appear in the Code. This parallel structure ensures that the relevant provisions apply to all tax-qualified plans, including IRAs. With regard to prohibited transactions, the Title I provisions generally authorize recovery of losses from, and imposition of civil penalties on, the responsible plan fiduciaries, while the Code provisions impose excise taxes on persons engaging in the prohibited transactions. The definition of fiduciary with respect to a plan is the same in section 4975(e)(3)(B) of the IRC as the definition in section 3(21)(A)(ii) of ERISA, 29 U.S.C. 1002(21)(A)(ii), and the Department's 1975 regulation defining fiduciary investment advice is virtually identical to regulations that define the term ''fiduciary'' under the Code. 26 CFR 54.4975–9(c) (1975).

To rationalize the administration and interpretation of dual provisions under ERISA and the Code, Reorganization Plan No. 4 of 1978 divided the interpretive and rulemaking authority for these provisions between the Secretaries of Labor and of the Treasury, so that, in general, the agency with responsibility for a given provision of Title I of ERISA would also have responsibility for the corresponding provision in the Code. Among the sections transferred to the Department were the prohibited transaction provisions and the definition of a fiduciary in both Title I of ERISA and in the Code. ERISA's prohibited transaction rules, 29 U.S.C. 1106–1108, apply to ERISA-covered plans, and the Code's corresponding prohibited transaction rules, 26 U.S.C. 4975(c), apply both to ERISA-covered pension plans that are tax-qualified pension plans, as well as other tax-advantaged arrangements, such as IRAs, that are not subject to the fiduciary responsibility and prohibited transaction rules in ERISA.[25]

Given this statutory structure, and the dual nature of the 1975 regulation, the proposal would apply to both the definition of ''fiduciary'' in section 3(21)(A)(ii) of ERISA and the definition's counterpart in section 4975(e)(3)(B) of the Code. As a result, it applies to persons who give investment advice to IRAs. In this respect, the new proposal is the same as the 2010 Proposal.

Many comments on the 2010 Proposal concerned its impact on IRAs and questioned whether the Department had adequately considered possible negative impacts. Some commenters were especially concerned that application of the new rule could disrupt existing brokerage arrangements that they believe are beneficial to customers. In particular, brokers often receive revenue sharing, 12b–1 fees, and other compensation from the parties whose investment products they recommend. If the brokers were treated as fiduciaries, the receipt of such fees could violate the Code's prohibited transaction rules, unless eligible for a prohibited transaction exemption. According to these commenters, the disruption of such current fee arrangements could result in a reduced level of assistance to investors, higher up-front fees, and less investment advice, particularly to investors with small accounts. In addition, some commenters expressed skepticism that the imposition of fiduciary standards would result in improved advice and questioned the view that current compensation arrangements could cause sub-optimal advice. Additionally, commenters stressed the need for coordination between the Department and other regulatory agencies, such as the SEC, CFTC, and Treasury.

As discussed above, to better align the regulatory definition of fiduciary with the statutory provisions and underlying Congressional goals, the Department is proposing a definition of a fiduciary investment advice that would encompass investment recommendations that are individualized or specifically directed to plans, participants, beneficiaries or IRA owners, if the adviser receives a direct or indirect fee. Neither the relevant statutory provisions, nor the current regulation, draw a distinction between brokers and other advisers or carve brokers out of the scope of the fiduciary provisions of ERISA and of the Code. The relevant statutory provisions, and accordingly the proposed regulation, establish a functional test based on the service provider's actions, rather than the provider's title (*e.g.,* broker or registered investment adviser). If one engages in specified activities, such as the provision of investment advice for a direct or indirect fee, the person engaging in those activities is a fiduciary, irrespective of labels. Moreover, the statutory definition of fiduciary advice is identical under both ERISA and the Code. There is no indication that the definition should vary between plans and IRAs.

In light of this statutory framework, the Department does not believe it would be appropriate to carve out a special rule for IRAs, or for brokers or others who make specific investment recommendations to IRA owners or to other participants in non-ERISA plans for direct or indirect fees. When Congress enacted ERISA and the corresponding Code provisions, it chose to impose fiduciary status on persons who provide investment advice to plans, participants, beneficiaries and IRA owners, and to specifically prohibit a wide variety of transactions in which the fiduciary has financial interests that potentially conflict with the fiduciary's obligation to the plan or IRA. It did not provide a special carve-out for brokers or IRAs, and the Department does not believe it would be appropriate to write such a carve-out into the regulation implementing the statutory definition.

Indeed, brokers who give investment advice to IRA owners or plan participants, and who otherwise meet the terms of the current five-part test, are already fiduciaries under the existing fiduciary regulation. If, for example, a broker regularly advises an individual IRA owner on specific investments, the IRA owner routinely follows the recommendations, and both parties understand that the IRA owner relies upon the broker's advice, the broker is almost certainly a fiduciary. In such circumstances, the broker is already subject to the excise tax on prohibited transactions if he or she receives fees from a third party in connection with recommendations to invest IRA assets in the third party's investment products, unless the broker satisfies the conditions of a prohibited transaction exemption that covers the particular fees. Indeed, broker-dealers today can provide fiduciary investment advice by complying with prohibited transaction exemptions that permit the receipt of commission-based compensation for the sale of mutual funds and other securities. Moreover, both ERISA and the Code were amended as part of the PPA to include a new prohibited transaction exemption that applies to investment advice in both the plan and IRA context. The PPA exemption clearly reflects the longstanding concern under ERISA and the Code about the dangers posed by conflicts of interest, and the need for appropriate safeguards in both the plan and IRA markets. Under the terms of the

[25] The Secretary of Labor also was transferred authority to grant administrative exemptions from the prohibited transaction provisions of the Code.

exemption, the investment recommendations must either result from the application of an unbiased and independently certified computer program or the fiduciary's fees must be level (*i.e.,* the fiduciary's compensation cannot vary based on his or her particular investment recommendations).

Moreover, as discussed in the regulatory impact analysis below, there is substantial evidence to support the statutory concern about conflicts of interest. As the analysis reflects, unmitigated conflicts can cause significant harm to investors. The available evidence supports a finding that the negative impacts are present and often times large. The proposal would curtail the harms to investors from such conflicts and thus deliver significant benefits to plan participants and IRA owners. Plans, plan participants, beneficiaries and IRA owners would all benefit from advice that is impartial and puts their interests first. Moreover, broker-dealer interactions with plan fiduciaries, participants, and IRA owners present some of the most obvious conflict of interest problems in this area. Accordingly, in the Department's view, broker-dealers that provide investment advice should be subject to fiduciary duties to mitigate conflicts of interest and increase investor protections.

Some commenters additionally suggested that the application of special fiduciary rules in the retail investment market to IRA accounts, but not savings outside of tax-preferred retirement accounts, is inappropriate and could lead to confusion among investors and service providers. The distinction between IRAs and other retail accounts, however, is a direct result of a statutory structure that draws a sensible distinction between tax-favored IRAs and other retail investment accounts. The Code itself treats IRAs differently, bestowing uniquely favorable tax treatment on such accounts and prohibiting self-dealing by persons providing investment advice for a fee. In these respects, and in light of the special public interest in retirement security, IRAs are more like plans than like other retail accounts. Indeed, as noted above, the vast majority of IRA assets today are attributable to rollovers from plans.[26] In addition, IRA owners may be at even greater risk from conflicted advice than plan participants. Unlike ERISA plan participants, IRA owners do not have the benefit of an independent plan fiduciary to represent their interests in selecting a menu of investment options or structuring advice arrangements. They cannot sue fiduciary advisers under ERISA for losses arising from fiduciary breaches, nor can the Department sue on their behalf. Compared to participants with ERISA plan accounts, IRA owners often have larger account balances and are more likely to be elderly. Thus, limiting the harms to IRA investors resulting from conflicts of interest of advisers is at least as important as protecting ERISA plans and plan participants from such harms.

The Department believes that it is important to address the concerns of brokers and others providing investment advice to IRA owners about undue disruptions to current fee arrangements, but also believes that such concerns are best resolved within a fiduciary framework, rather than by simply relieving advisers from fiduciary responsibility. As previously discussed, the proposed regulation permits investment professionals to provide important financial information and education, without acting as fiduciaries or being subject to the prohibited transaction rules. Moreover, ERISA and the Code create a flexible process that enables the Department to grant class and individual exemptions from the prohibited transaction rules for fee practices that it determines are beneficial to plan participants and IRA owners. For example, existing prohibited transaction exemptions already allow brokers who provide fiduciary advice to receive commissions generating conflicts of interest for trading the types of securities and funds that make up the large majority of IRA assets today. In addition, simultaneous with the publication of this proposed regulation, the Department is publishing new exemption proposals that would permit common fee practices, while at the same time protecting plan participants, beneficiaries and IRA owners from abuse and conflicts of interest. As noted above, in contrast with many previously adopted PTE exemptions that are transaction-specific, the Best Interest Contract PTE described below reflects a more flexible approach that accommodates a wide range of current business practices while minimizing the impact of conflicts of interest and ensuring that plans and IRAs receive investment recommendations that are in their best interests.

As discussed, the Department received extensive comment on the application of the 2010 Proposal's provisions to IRAs, but comments regarding other non-ERISA plans such as Health Savings Accounts (HSAs), Archer Medical Savings Accounts and Coverdell Education Savings Accounts were less prolific. The Department notes that these accounts are given tax preferences as are IRAs. Further, some of the accounts, such as HSAs, can be used as long term savings accounts for retiree health care expenses. These types of accounts also are expressly defined by Code section 4975(e)(1) as plans that are subject to the Code's prohibited transaction rules. Thus, although they generally may hold fewer assets and may exist for shorter durations than IRAs, the owners of these accounts or the persons for whom these accounts were established are entitled to receive the same protections from conflicted investment advice as IRA owners. Accordingly, these accounts are included in the scope of covered plans in paragraph (f)(2) of the new proposal. However, the Department solicits specific comment as to whether it is appropriate to cover and treat these plans under the proposed regulation in a manner similar to IRAs as to both coverage and applicable carve-outs.

F. Administrative Prohibited Transaction Exemptions

In addition to the new proposal in this Notice, the Department is also proposing, elsewhere in this edition of the **Federal Register**, certain administrative class exemptions from the prohibited transaction provisions of ERISA (29 U.S.C. 1106), and the Code (26 U.S.C. 4975(c)(1)) as well as proposed amendments to previously adopted exemptions. The proposed exemptions and amendments would allow, subject to appropriate safeguards, certain broker-dealers, insurance agents and others that act as investment advice fiduciaries to nevertheless continue to receive a variety of forms of compensation that would otherwise violate prohibited transaction rules and trigger excise taxes. The proposed exemptions would supplement statutory exemptions at 29 U.S.C. 1108 and 26 U.S.C. 4975(d), and previously adopted class exemptions.

Investment advice fiduciaries to plans and plan participants must meet ERISA's standards of prudence and loyalty to their plan customers. Such fiduciaries also face taxes, remedies and other sanctions for engaging in certain transactions, such as self-dealing with plan assets or receiving payments from third parties in connection with plan transactions, unless the transactions are permitted by an exemption from ERISA's and the Code's prohibited transaction rules. IRA fiduciaries do not

[26] Peter Brady, Sarah Holden, and Erin Shon, *The U.S. Retirement Market, 2009,* Investment Company Institute, Research Fundamentals, Vol. 19, No. 3, May 2010, *at http://www.ici.org/pdf/fm-v19n3.pdf.*

have the same general fiduciary obligations of prudence and loyalty under the statute, but they too must adhere to the prohibited transaction rules or they must pay an excise tax. The prohibited transaction rules help ensure that investment advice provided to plan participants and IRA owners is not driven by the adviser's financial self-interest.

Proposed Best Interest Contract Exemption (Best Interest Contract PTE)

The proposed Best Interest Contract PTE would provide broad and flexible relief from the prohibited transaction restrictions on certain compensation received by investment advice fiduciaries as a result of a plan's or IRA's purchase, sale or holding of specifically identified investments. The conditions of the exemption are generally principles-based rather than prescriptive and require, in particular, that advice be provided in the best interest of the plan or IRA. This exemption was developed partly in response to comments received that suggested such an approach. It is a significant departure from existing exemptions, examples of which are discussed below, which are limited to much narrower categories of investments under more prescriptive and less flexible and adaptable conditions.

The proposed Best Interest Contract PTE was developed to promote the provision of investment advice that is in the best interest of retail investors, such as plan participants and beneficiaries, IRA owners, and small plans. The proposed exemption would apply to compensation received by individual investment advice fiduciaries (including individual advisers [27] and firms that employ or otherwise contract with such individuals) as well as their affiliates and related entities, that is provided in connection with the purchase, sale or holding of certain assets by the plans, participants and beneficiaries, and IRAs. In order to protect the interests of these investors, the exemption requires the firm and the adviser to contractually acknowledge fiduciary status, commit to adhere to basic standards of impartial conduct, warrant that they will comply with applicable federal and state laws governing advice and that they have adopted policies and procedures reasonably designed to mitigate any harmful impact of conflicts of interest, and disclose basic information on their conflicts of interest and on the cost of their advice. The standards of impartial conduct to which the adviser and firm must commit are basic obligations of fair dealing and fiduciary conduct to which the Department believes advisers and firms often informally commit—to give advice that is in the customer's best interest; avoid misleading statements; and receive no more than reasonable compensation. This standards-based approach aligns the adviser's interests with those of the plan or IRA customer, while leaving the adviser and employing firm the flexibility and discretion necessary to determine how best to satisfy these basic standards in light of the unique attributes of their business.

As an additional protection for retail investors, the exemption would not apply if the contract contains exculpatory provisions disclaiming or otherwise limiting liability of the adviser or financial institution for violation of the contract's terms. Adopting the approach taken by FINRA, the contract could require the parties to arbitrate individual claims, but it could not limit the rights of the plan, participant, beneficiary, or IRA owner to bring or participate in a class action against the adviser or financial institution.

Additional conditions would apply to firms that limit the products that their advisers can recommend based on the receipt of third party payments or the proprietary nature of the products (*i.e.,* products offered or managed by the firm or its affiliates) or for other reasons. The conditions require, among other things, that such firms provide notice of the limitations to plans, participants and beneficiaries and IRA owners, as well as make a written finding that the limitations do not prevent advisers from providing advice in those investors' best interest.

Finally, certain notice and data collection requirements would apply to all firms relying on the exemption. Specifically, firms would be required to notify the Department in advance of doing so, and they would have to maintain certain data, and make it available to the Department upon request, to help evaluate the effectiveness of the exemption in safeguarding the interests of plan and IRA investors.

The Department's intent in crafting the Best Interest Contract PTE is to permit common compensation structures that create conflicts of interest, while minimizing the costs imposed on investors by such conflicts. The exemption is designed both to impose broad fiduciary standards of conduct on advisers and financial institutions, and to give them sufficient flexibility to accommodate a wide range of business practices and compensation structures that currently exist or that may develop in the future.

The Department is also considering an additional streamlined exemption that would apply to compensation received in connection with investments by plans, participants and beneficiaries, and IRA owners, in certain high-quality, low-fee investments, subject to fewer conditions than in the proposed Best Interest Contract PTE. If properly crafted, the streamlined exemption could achieve important goals of minimizing compliance burdens for advisers and financial institutions when they offer investment products with little potential for material conflicts of interest. The Department is not proposing text for such a streamlined exemption due to the difficulty in operationalizing this concept. However the Department is eager to receive comments on whether such an exemption would be worthwhile and, as part of the notice proposing the Best Interest Contract PTE, is soliciting comments on a number of issues relating to the design of a streamlined exemption.

Proposed Principal Transaction Exemption (Principal Transaction PTE)

Broker-dealers and other advisers commonly sell debt securities out of their own inventory to plans, participants and beneficiaries and IRA owners in a type of transaction known as a ''principal transaction.'' Fiduciaries trigger taxes, remedies and other legal sanctions when they engage in such activities, unless they qualify for an exemption from the prohibited transaction rules. These principal transactions raise issues similar to those addressed in the Best Interest Contract PTE, but also raise unique concerns because the conflicts of interest are particularly acute. In these transactions, the adviser sells the security directly from its own inventory, and may be able to dictate the price that the plan, participant or beneficiary, or IRA owner pays.

Because of the prevalence of the practice in the market for fixed income securities, the Department has proposed a separate Principal Transactions PTE that would permit principal transactions in certain debt securities between a plan or IRA owner and an investment advice fiduciary, under certain circumstances.

[27] By using the term ''adviser,'' the Department does not intend to limit the exemption to investment advisers registered under the Investment Advisers Act of 1940; under the exemption an adviser is individual who can be a representative of a registered investment adviser, a bank or similar financial institution, an insurance company, or a broker-dealer.

The Principal Transaction PTE would include all of the contract requirements of the Best Interest Contract PTE. In addition, however, it would include specific conditions related to the price of the debt security involved in the transaction. The adviser would have to obtain two price quotes from unaffiliated counterparties for the same or a similar security, and the transaction would have to occur at a price at least as favorable to the plan or IRA as the two price quotes. Additionally, the adviser would have to disclose the amount of compensation and profit (sometimes referred to as a ''mark up'' or ''mark down'') that it expects to receive on the transaction.

Amendments to Existing PTEs

In addition to the Best Interest Contract PTE and the Principal Transaction PTE, the Department is also proposing elsewhere in the **Federal Register** amendments to certain existing PTEs.

Prohibited Transaction Exemption 86–128

Prohibited Transaction Exemption (PTE) 86–128 [28] currently allows an investment advice fiduciary to cause the recipient plan or IRA to pay the investment advice fiduciary or its affiliate a fee for effecting or executing securities transactions as agent. To prevent churning, the exemption does not apply if such transactions are excessive in either amount or frequency. The exemption also allows the investment advice fiduciary to act as an agent for both the plan and the other party to the transaction (*i.e.,* the buyer and the seller of securities) and receive a reasonable fee. To use the exemption, the fiduciary cannot be a plan administrator or employer, unless all profits earned by these parties are returned to the plan. The conditions of the exemption require that a plan fiduciary independent of the investment advice fiduciary receive certain disclosures and authorize the transaction. In addition, the independent fiduciary must receive confirmations and an annual ''portfolio turnover ratio'' demonstrating the amount of turnover in the account during that year. These conditions are not presently applicable to transactions involving IRAs.

The Department is proposing to amend PTE 86–128 to require all fiduciaries relying on the exemption to adhere to the same impartial conduct standards required in the Best Interest Contract PTE. At the same time, the proposed amendment would eliminate relief for investment advice fiduciaries to IRA owners; instead they would be required to rely on the Best Interest Contract PTE for an exemption for such compensation. In the Department's view, the provisions in the Best Interest Contract Exemption better address the interests of IRAs with respect to transactions otherwise covered by PTE 86–128 and, unlike plan participants and beneficiaries, there is no separate plan fiduciary in the IRA market to review and authorize the transaction. Investment advice fiduciaries to plans would remain eligible for relief under the exemption, as would investment managers with full investment discretion over the investments of plans and IRA owners, but they would be required to comply with all the protective conditions, described above. Finally, the Department is proposing that PTE 86–128 extend to a new covered transaction, for fiduciaries who sell mutual fund shares out of their own inventory (*i.e.,* acting as principals, rather than agents) to plans and IRAs and to receive commissions for doing so. This transaction is currently the subject of another exemption, PTE 75–1, Part II(2) (discussed below) that the Department is proposing to revoke.

Several changes are proposed with respect to PTE 75–1, a multi-part exemption for securities transactions involving broker dealers and banks, and plans and IRAs.[29] Part I(b) and (c) currently provide relief for certain non-fiduciary services to plans and IRAs. The Department is proposing to revoke these provisions, and require persons seeking to engage in such transactions to rely instead on the existing statutory exemptions provided in ERISA section 408(b)(2) and Code section 4975(d)(2), and the Department's implementing regulations at 29 CFR 2550.408b–2. The Department believes the conditions of the statutory exemptions are more appropriate for the provision of these services.

PTE 75–1, Part II(2), currently provides relief for fiduciaries selling mutual fund shares to plans and IRAs in a principal transaction to receive commissions. PTE 75–1, Part II(2) currently provides relief for fiduciaries to receive commissions for selling mutual fund shares to plans and IRAs in a principal transaction. As described above, the Department is proposing to provide relief for these types of transactions in PTE 86–128, and so is proposing to revoke PTE 75–1, Part II(2), in its entirety. As discussed in more detail in the notice of proposed amendment/revocation, the Department believes the conditions of PTE 86–128 are more appropriate for these transactions.

PTE 75–1, Part V, currently permits broker-dealers to extend credit to a plan or IRA in connection with the purchase or sale of securities. The exemption does not permit broker-dealers that are fiduciaries to receive compensation when doing so. The Department is proposing to amend PTE 75–1, Part V, to permit investment advice fiduciaries to receive compensation for lending money or otherwise extending credit, but only for the limited purpose of avoiding a failed securities transaction.

Prohibited Transaction Exemption 84–24

PTE 84–24 [30] covers transactions involving mutual fund shares, or insurance or annuity contracts, sold to plans or IRA investors by pension consultants, insurance agents, brokers, and mutual fund principal underwriters who are fiduciaries as a result of advice they give in connection with these transactions. The exemption allows these investment advice fiduciaries to receive a sales commission with respect to products purchased by plans or IRA investors. The exemption is limited to sales commissions that are reasonable under the circumstances. The investment advice fiduciary must provide disclosure of the amount of the commission and other terms of the transaction to an independent fiduciary of the plan or IRA, and obtain approval for the transaction. To use this exemption, the investment advice fiduciary may not have certain roles with respect to the plan or IRA such as trustee, plan administrator, fiduciary with written authorization to manage the plan's assets and employers. However it is available to investment advice fiduciaries regardless of whether they expressly acknowledge their fiduciary status or are simply functional or ''inadvertent'' fiduciaries that have not expressly agreed to act as fiduciary advisers, provided there is no written authorization granting them discretion to acquire or dispose of the assets of the plan or IRA.

[28] Class Exemption for Securities Transactions Involving Employee Benefit Plans and Broker-Dealers, 51 FR 41686 (Nov. 18, 1986), amended at 67 FR 64137 (Oct. 17, 2002).

[29] Exemptions from Prohibitions Respecting Certain Classes of Transactions Involving Employee Benefit Plans and Certain Broker-Dealers, Reporting Dealers and Banks, 40 FR 50845 (Oct. 31, 1975), as amended at 71 FR 5883 (Feb. 3, 2006).

[30] Class Exemption for Certain Transactions Involving Insurance Agents and Brokers, Pension Consultants, Insurance Companies, Investment Companies and Investment Company Principal Underwriters, 49 FR 13208 (Apr. 3, 1984), amended at 71 FR 5887 (Feb. 3, 2006).

The Department is proposing to amend PTE 84–24 to require all fiduciaries relying on the exemption to adhere to the same impartial conduct standards required in the Best Interest Contract Exemption. At the same time, the proposed amendment would revoke PTE 84–24 in part so that investment advice fiduciaries to IRA owners would not be able to rely on PTE 84–24 with respect to (1) transactions involving variable annuity contracts and other annuity contracts that constitute securities under federal securities laws, and (2) transactions involving the purchase of mutual fund shares. Investment advice fiduciaries to IRA owners would instead be required to rely on the Best Interest Contract Exemption for most common forms of compensation received in connection with these transactions. The Department believes that investment advice transactions involving annuity contracts that are treated as securities and transactions involving the purchase of mutual fund shares should occur under the conditions of the Best Interest Contract Exemption due to the similarity of these investments, including their distribution channels and disclosure obligations, to other investments covered in the Best Interest Contract Exemption. Investment advice fiduciaries to ERISA plans would remain eligible for relief under the exemption with respect to transactions involving all insurance and annuity contracts and mutual fund shares and the receipt of commissions allowable under that exemption. Investment advice fiduciaries to IRAs could still receive commissions for transactions involving non-securities insurance and annuity contracts, but they would be required to comply with all the protective conditions, described above.

Finally, the Department is proposing amendments to certain other existing class exemptions to require adherence to the impartial conduct standards required in the Best Interest Contract PTE. Specifically, PTEs 75–1, Part III, 75–1, Part IV, 77–4, 80–83, and 83–1, would be amended. These existing class exemptions will otherwise remain in place, affording flexibility to fiduciaries who currently use the exemptions or who wish to use the exemptions in the future.

The proposed dates on which the new exemptions and amendments to existing exemptions would be effective are summarized below.

G. The Provision of Professional Services Other Than Investment Advice

Several commenters asserted that it was unclear whether investment advice under the scope of the 2010 Proposal would include the provision of information and plan services that traditionally have been performed in a non-fiduciary capacity. For example, they requested that the proposal be revised to make clear that actuaries, accountants, and attorneys, who have historically not been treated as ERISA fiduciaries for plan clients, would not become fiduciary investment advisers by reason of providing actuarial, accounting and legal services. They said that if individuals providing these services were classified as fiduciaries, the associated costs would almost certainly increase because of the need to account for their new potential fiduciary liability. This was not the intent of the 2010 proposal.

The new proposal clarifies that attorneys, accountants, and actuaries would not be treated as fiduciaries merely because they provide such professional assistance in connection with a particular investment transaction. Only when these professionals act outside their normal roles and recommend specific investments or render valuation opinions in connection with particular investment transactions, would they be subject to the proposed fiduciary definition.

Similarly, the new proposal does not alter the principle articulated in ERISA Interpretive Bulletin 75–8, D–2 at 29 CFR 2509.75–8 (1975). Under the bulletin, the plan sponsor's human resources personnel or plan service providers who have no power to make decisions as to plan policy, interpretations, practices or procedures, but who perform purely administrative functions for an employee benefit plan, within a framework of policies, interpretations, rules, practices and procedures made by other persons, are not fiduciaries with respect to the plan.

H. Effective Date; Applicability Date

Final Rule

Commenters on the 2010 Proposal asked the Department to provide sufficient time for orderly and efficient compliance, and to make it clear that the final rule would not apply in connection with advice provided before the effective date of the final rule. Many commenters also expressed concern with the provision in the Department's 2010 Proposal that the final regulation and class exemptions would be effective 90 days after their publication in the **Federal Register**. Some commenters suggested that these effective dates should be extended to as much as 12 months or longer following publication of the new rule to allow service providers sufficient time to make necessary changes in business practices, recordkeeping, communication materials, sales processes, compensation arrangements, and related agreements, as well as the time necessary to obtain and adjust to any additional individual or class exemptions. Several said that applicability of any changes in the 1975 regulation should be no earlier than two years after the promulgation of a final regulation. Other commenters thought that the effective dates in the 2010 proposal were reasonable and asked that the final rules should go into effect promptly in order to reduce ongoing harms to savers.

In response to these concerns, the Department has revised the date by which the final rule would apply. Specifically, the final rule would be effective 60 days after publication in the **Federal Register** and the requirements of the final rule would generally become applicable eight months after publication of a final rule, with the potential exceptions noted below. This modification is intended to balance the concerns raised by commenters about the need for prompt action with concerns raised about the cost and burden associated with transitioning current and future contracts or arrangements to satisfy the requirements of the final rule and any accompanying prohibited transaction exemptions.

Administrative Prohibited Transaction Exemptions

The Department proposes to make the Best Interest Contract Exemption, if granted, available on the final rule's applicability date, *i.e.,* eight months after publication of a final rule. Further, the department proposes that the other new and revised PTEs that it is proposing go into effect as of the final rule's applicability date.[31]

For those fiduciary investment advisers who choose to avail themselves of the Best Interest Contract Exemption, the Department recognizes that compliance with certain requirements of the new exemption may be difficult within the eight-month timeframe. The Department therefore is soliciting comments on whether to delay the application of certain requirements of the Best Interest Contract Exemption for several months (for example, certain data collection requirements), thereby enabling firms and advisers to benefit from the Best Interest Contract Exemption without meeting all the

[31] See the notices with respect to these proposals, published elsewhere in this issue of the **Federal Register**.

requirements for a limited period of time. Although the Department does not believe that a general delay in the application of the exemption's requirements is warranted, it recognizes that a short-term delay of some requirements may be appropriate and may not compromise the overall protections created by the proposed rule and exemptions. As discussed in more detail in the Notice proposing the Best Interest Contract Exemption published elsewhere in this issue of the **Federal Register**, the Department requests comments on this approach.

I. Public Hearing

The Department plans to hold an administrative hearing within 30 days of the close of the comment period. As with the 2010 Proposal, the Department will ensure ample opportunity for public comment by reopening the record following the hearing and publication of the hearing transcript. Specific information regarding the date, location and submission of requests to testify will be published in a notice in the **Federal Register**.

J. Regulatory Impact Analysis

Under Executive Order 12866, ''significant'' regulatory actions are subject to the requirements of the Executive Order and review by the Office of Management and Budget (OMB). Section 3(f) of the executive order defines a ''significant regulatory action'' as an action that is likely to result in a rule (1) having an annual effect on the economy of $100 million or more, or adversely and materially affecting a sector of the economy, productivity, competition, jobs, the environment, public health or safety, or State, local or tribal governments or communities (also referred to as ''economically significant''); (2) creating serious inconsistency or otherwise interfering with an action taken or planned by another agency; (3) materially altering the budgetary impacts of entitlement grants, user fees, or loan programs or the rights and obligations of recipients thereof; or (4) raising novel legal or policy issues arising out of legal mandates, the President's priorities, or the principles set forth in the Executive Order. OMB has determined that this proposed rule is economically significant within the meaning of section 3(f)(1) of the Executive Order, because it would be likely to have an effect on the economy of $100 million in at least one year. Accordingly, OMB has reviewed the rule pursuant to the Executive Order.

The Department's complete Regulatory Impact Analysis is available at *www.dol.gov/ebsa/pdf/conflictsofinterestria.pdf*. It is summarized below.

Tax-preferred retirement savings, in the form of private-sector, employer-sponsored retirement plans, such as 401(k) plans (''plans''), and Individual Retirement Accounts (''IRAs''), are critical to the retirement security of most U.S. workers. Investment professionals play a major role in guiding their investment decisions. However, these professional advisers often are compensated in ways that create conflicts of interest, which can bias the investment advice they render and erode plan and IRA investment results. In order to limit or mitigate conflicts of interest and thereby improve retirement security, the Department of Labor (''the Department'') is proposing to attach fiduciary status to more of the advice rendered to plan officials, participants, and beneficiaries (plan investors) and IRA investors.

Since the Department issued its 1975 rule, the retirement savings market has changed profoundly. Financial products are increasingly varied and complex. Individuals, rather than large employers, are increasingly responsible for their investment decisions as IRAs and 401(k)-type defined contribution plans have supplanted defined benefit pensions as the primary means of providing retirement security. Plan and IRA investors often lack investment expertise and must rely on experts—but are unable to assess the quality of the expert's advice or police its conflicts of interest. Most have no idea how ''advisers'' are compensated for selling them products. Many are bewildered by complex choices that require substantial financial literacy and welcome ''free'' advice. The risks are growing as baby boomers retire and move money from plans, where their employer has both the incentive and the fiduciary duty to facilitate sound investment choices, to IRAs, where both good and bad investment choices are myriad and most advice is conflicted. These ''rollovers'' are expected to approach $2.5 trillion over the next 5 years.[32] These rollovers, which will be one-time and not ''on a regular basis'' and thus not covered by the 1975 standard, will be the most important financial decisions that many consumers make in their lifetime. An ERISA plan investor who rolls her retirement savings into an IRA could lose 12 to 24 percent of the value of her savings over 30 years of retirement by accepting advice from a conflicted financial advisor.[33] Timely regulatory action to redress advisers' conflicts is warranted to avert such losses.

In the retail IRA marketplace, growing consumer demand for personalized advice, together with competition from online discount brokerage firms, has pushed brokers to offer more comprehensive guidance services rather than just transaction support. Unfortunately, their traditional compensation sources—such as brokerage commissions, revenue shared by mutual funds and funds' asset managers, and mark-ups on bonds sold from their own inventory—can introduce acute conflicts of interest. Brokers and others advising IRA investors are often able to calibrate their business practices to steer around the narrow 1975 rule and thereby avoid fiduciary status and prohibited transactions for accepting conflict-laden compensation. Many brokers market retirement investment services in ways that clearly suggest the provision of tailored or individualized advice, while at the same time relying on the 1975 rule to disclaim any fiduciary responsibility in the fine print of contracts and marketing materials. Thus, at the same time that marketing materials may characterize the financial adviser's relationship with the customer as one-on-one, personalized, and based on the client's best interest, footnotes and legal boilerplate disclaim the requisite mutual agreement, arrangement, or understanding that the advice is individualized or should serve as a primary basis for investment decisions. What is presented to an IRA investor as trusted advice is often paid for by a financial product vendor in the form of a sales commission or shelf-space fee, without adequate counter-balancing consumer protections that are designed to ensure that the advice is in the investor's best interest. In another variant of the same problem, brokers and others provide apparently tailored advice to customers under the guise of general education to avoid triggering fiduciary status and responsibility.

[32] Cerulli Associates, ''Retirement Markets 2014: Sizing Opportunities in Private and Public Retirement Plans,'' 2014.

[33] For example, an ERISA plan investor who rolls $200,000 into an IRA, earns a 6% nominal rate of return with 3% inflation, and aims to spend down her savings in 30 years, would be able to consume $10,204 per year for the 30 year period. A similar investor whose assets underperform by 1 or 2 percentage points per year would only be able to consume $8,930 or $7,750 per year, respectively, in each of the 30 years. The 1 to 2 percentage point underperformance comes from a careful review of a large and growing body of literature which consistently points to a substantial failure of the market for retirement advice. The literature is discussed in the Department's complete Regulatory Impact Analysis (available at *www.dol.gov/ebsa/pdf/conflictsofinterestria.pdf*).

Likewise in the plan market, pension consultants and advisers that plan sponsors rely on to guide their decisions often avoid fiduciary status under the five-part test and are conflicted. For example, if a plan hires an investment professional or appraiser on a one-time basis for an investment recommendation on a large, complex investment, the adviser has no fiduciary obligation to the plan under ERISA. Even if the plan official, who lacks the specialized expertise necessary to evaluate the complex transaction on his or her own, invests all or substantially all of the plan's assets in reliance on the consultant's professional judgment, the consultant is not a fiduciary because he or she does not advise the plan on a ''regular basis'' and therefore may stand to profit from the plan's investment due to a conflict of interest that could affect the consultant's best judgment. Too much has changed since 1975, and too many investment decisions are made as one-time decisions and not advice on a regular basis for the five-part test to be a meaningful safeguard any longer.

The proposed definition of fiduciary investment advice included in this NPRM generally covers specific recommendations on investments, investment management, the selection of persons to provide investment advice or management, and appraisals in connection with investment decisions. Persons who provide such advice would fall within the proposed regulation's ambit if they either (a) represent that they are acting as an ERISA fiduciary or (b) make investment recommendations pursuant to an agreement, arrangement, or understanding that the advice is individualized or specifically directed to the recipient for consideration in making investment or investment management decisions regarding plan or IRA assets.

The current proposal specifically includes as fiduciary investment advice recommendations concerning the investment of assets that are rolled over or otherwise distributed from a plan. This would supersede guidance the Department provided in a 2005 advisory opinion,[34] which concluded that such recommendations did not constitute fiduciary advice. However, the current proposal provides that an adviser does not act as a fiduciary merely by providing plan investors with information about plan distribution options, including the tax consequences associated with the available types of benefit distributions.

The current proposal adopts what the Department intends to be a balanced approach to prohibited transaction exemptions. The proposal narrows and attaches new protective conditions to some existing PTEs. At the same time it includes some new PTEs with broad but targeted combined scope and strong protective conditions. These elements of the proposal reflect the Department's effort to ensure that advice is impartial while avoiding larger and costlier than necessary disruptions to existing business arrangements or constraints on future innovation.

In developing the current proposal, the Department conducted an in-depth economic assessment of the market for retirement investment advice. As further discussed below, the Department found that conflicted advice is widespread, causing serious harm to plan and IRA investors, and that disclosing conflicts alone would fail to adequately mitigate the conflicts or remedy the harm. By extending fiduciary status to more providers of advice and providing broad but targeted and protective PTEs, the Department believes the current proposal would mitigate conflicts, support consumer choice, and deliver substantial gains for retirement investors and economic benefits that more than justify its costs.

Advisers' conflicts take a variety of forms and can bias their advice in a variety of ways. For example, advisers often are paid more for selling some mutual funds than others, and to execute larger and more frequent trades of mutual fund shares or other securities. Broker-dealers reap price spreads from principal transactions, so advisers may be encouraged to recommend larger and more frequent trades. These and other adviser compensation arrangements introduce direct and serious conflicts of interest between advisers and retirement investors. Advisers often are paid a great deal more if they recommend investments and transactions that are highly profitable to the financial industry, even if they are not in investors' best interests. These financial incentives can and do bias the advisers' recommendations.

Following such biased advice can inflict losses on investors in several ways. They may choose more expensive and/or poorer performing investments. They may trade too much and thereby incur excessive transaction costs, and they may incur more costly timing errors, which are a common consequence of chasing returns.

A wide body of economic evidence, reviewed in the Department's full Regulatory Impact Analysis (available at *www.dol.gov/ebsa/pdf/conflictsofinterestria.pdf*), supports a finding that the impact of these conflicts of interest on investment outcomes is large and negative. The supporting evidence includes, among other things, statistical analyses of conflicted investment channels, experimental studies, government reports documenting abuse, and economic theory on the dangers posed by conflicts of interest and by the asymmetries of information and expertise that characterize interactions between ordinary retirement investors and conflicted advisers. A review of this data, which consistently points to a substantial failure of the market for retirement advice, suggests that IRA holders receiving conflicted investment advice can expect their investments to underperform by an average of 100 basis points per year over the next 20 years. The underperformance associated with conflicts of interest—in the mutual funds segment alone—could cost IRA investors more than $210 billion over the next 10 years and nearly $500 over the next 20 years. Some studies suggest that the underperformance of broker-sold mutual funds may be even higher than 100 basis points. If the true underperformance of broker-sold funds is 200 basis points, IRA mutual fund holders could suffer from underperformance amounting to $430 billion over 10 years and nearly $1 trillion across the next 20 years. While the estimates based on the mutual fund market are large, the total market impact could be much larger. Insurance products, Exchange Traded Funds (ETFs), individual stocks and bonds, and other products are all sold by brokers with conflicts of interest.

Disclosure alone has proven ineffective to mitigate conflicts in advice. Extensive research has demonstrated that most investors have little understanding of their advisers' conflicts, and little awareness of what they are paying via indirect channels for the conflicted advice. Even if they understand the scope of the advisers' conflicts, most consumers generally cannot distinguish good advice, or even good investment results, from bad. The same gap in expertise that makes investment advice necessary frequently also prevents investors from recognizing bad advice or understanding advisers' disclosures. Recent research suggests that even if disclosure about conflicts could be made simple and clear, it would be ineffective—or even harmful.[35]

[34] DOL Advisory Opinion 2005–23A (Dec. 7, 2005).

[35] See Loewenstein *et al.,* (2011) for a summary of some relevant literature.

Excessive fees and substandard investment performance in DC plans or IRAs, which can result when advisers' conflicts bias their advice, erode benefit security. This proposal aims to ensure that advice is impartial, thereby rooting out excessive fees and substandard performance otherwise attributable to advisers' conflicts, producing gains for retirement investors. Delivering these gains would entail compliance costs—namely, the cost incurred by new fiduciary advisers to avoid the prohibited transaction rules and/or satisfy relevant PTE conditions. The Department expects investor gains would be very large relative to compliance costs, and therefore believes this proposal is economically justified and sound.

Because of limitations of the literature and other evidence, only some of these gains can be quantified with confidence. Focusing only on how load shares paid to brokers affect the size of loads IRA investors holding front-end load funds pay and the returns they achieve, we estimate the proposal would deliver to IRA investors gains of between $40 billion and $44 billion over 10 years and between $88 and $100 billion over 20 years. These estimates assume that the rule will eliminate (rather than just reduce) underperformance associated with the practice of incentivizing broker recommendations through variable front-end-load sharing; if the rule's effectiveness in this area is substantially below 100 percent, these estimates may overstate these particular gains to investors in the front-load mutual fund segment of the IRA market. The Department nonetheless believes that these gains alone would far exceed the proposal's compliance cost which are estimated to be between $2.4 billion and $5.7 billion over 10 years, mostly reflecting the cost incurred by new fiduciary advisers to satisfy relevant PTE conditions (these costs are also front-loaded and will be less in subsequent years). For example, if only 75 percent of the potential gains were realized in the subset of the market that was analyzed (the front-load mutual fund segment of the IRA market), the gains would amount to between $30 billion and $33 billion over 10 years. If only 50 percent were realized, the expected gains in this subset of the market would total between $20 billion and $22 billion over 10 years, still several times the proposal's estimated compliance cost

These estimates account for only a fraction of potential conflicts, associated losses, and affected retirement assets. The total gains to IRA investors attributable to the rule may be much higher than these quantified gains alone. The Department expects the proposal to yield large, additional gains for IRA investors, including improvements in the performance of IRA investments other than front-load mutual funds and potential reductions in excessive trading and associated transaction costs and timing errors (such as might be associated with return chasing). As noted above, under current rules, adviser conflicts could cost IRA investors as much as $410 billion over 10 years and $1 trillion over 20 years, so the potential additional gains to IRA investors from this proposal could be very large.

Just as with IRAs, there is evidence that conflicts of interest in the investment advice market also erode plan assets. For example, the U.S. Government Accountability Office (GAO) found that defined benefit pension plans using consultants with undisclosed conflicts of interest earned 1.3 percentage points per year less than other plans.[36] Other GAO reports point out how adviser conflicts may cause plan participants to roll plan assets into IRAs that charge high fees or 401(k) plan officials to include expensive or underperforming funds in investment menus.[37] A number of academic studies find that 401(k) plan investment options underperform the market,[38] and at least one study attributes such underperformance to excessive reliance on funds that are proprietary to plan service providers who may be providing investment advice to plan officials that choose the investment options.[39]

The Department expects the current proposal's positive effects to extend well beyond improved investment results for retirement investors. The IRA and plan markets for fiduciary advice and other services may become more efficient as a result of more transparent pricing and greater certainty about the fiduciary status of advisers and about the impartiality of their advice. There may be benefits from the increased flexibility that the current proposal's PTEs would provide with respect to fiduciary investment advice currently falling within the ambit of the 1975 rule. The current proposal's defined boundaries between fiduciary advice, education, and sales activity directed at large plans, may bring greater clarity to the IRA and plan services markets. Innovation in new advice business models, including technology-driven models, may be accelerated, and nudged away from conflicts and toward transparency, thereby promoting healthy competition in the fiduciary advice market.

A major expected positive effect of the current proposal in the plan advice market is improved compliance and associated improved security of plan assets and benefits. Clarity about advisers' fiduciary status would strengthen EBSA's enforcement activities resulting in fuller and faster correction, and stronger deterrence, of ERISA violations.

In conclusion, the Department believes that the current proposal would mitigate adviser conflicts and thereby improve plan and IRA investment results, while avoiding greater than necessary disruption of existing business practices and would deliver large gains to retirement investors and a variety of other economic benefits, which would more than justify its costs.

K. Initial Regulatory Flexibility Analysis

The Regulatory Flexibility Act (5 U.S.C. 601 *et seq.*) (RFA) imposes certain requirements with respect to Federal rules that are subject to the notice and comment requirements of section 553(b) of the Administrative Procedure Act (5 U.S.C. 551 *et seq.*) and which are likely to have a significant economic impact on a substantial number of small entities. Unless an agency determines that a proposal is not likely to have a significant economic impact on a substantial number of small entities, section 603 of the RFA requires the agency to present an initial regulatory flexibility analysis (IRFA) of the proposed rule. The Department's IRFA of the proposed rule is provided below.

The Department believes that amending the current regulation by broadening the scope of service providers, regardless of size, that would be considered fiduciaries would enhance the Department's ability to redress service provider abuses that currently exist in the plan service provider market, such as undisclosed fees, misrepresentation of compensation arrangements, and biased appraisals of the value of plan investments.

The Department's complete Initial Regulatory Flexibility Analysis is available at *www.dol.gov/ebsa/pdf/conflictsofinterestria.pdf.* It is summarized below.

The Department believes that the proposal would provide benefits to small plans and their related small employers and IRA holders, and impose costs on small service providers

[36] GAO Report, Publication No. GAO–09–503T, 2009.

[37] GAO Report, Publication No. GAO–11–119, 2011.

[38] See *e.g.* Elton *et al.* (2013).

[39] See Pool *et al.* (2014).

providing investment advice to ERISA plans, ERISA plan participants and IRA holders. Small service providers affected by this rule are defined to include broker-dealers, registered investment advisers, consultants, appraisers, and others providing investment advice to small ERISA plans and IRA that have less than $38.5 million in revenue.

The Department anticipates that broker-dealers would experience the largest impact from the proposed rule and associated proposed exemptions. Registered investment advisers and other ERISA plan service providers would experience less of a burden from the rule. The Department assumes that firms would utilize whichever PTEs would be most cost effective for their business models. Regardless of which PTEs they use, small affected entities would incur costs associated with developing and implementing new compliance policies and procedures to minimize conflicts of interest; creating and distributing new disclosures; maintaining additional compliance records; familiarizing and training staff on new requirements; and obtaining additional liability insurance.

As discussed previously, the Department estimated the costs of implementing new compliance policies and procedures, training staff, and creating disclosures for small broker-dealers. The Department estimates that small broker-dealers could expend on average approximately $53,000 in the first year and $21,000 in subsequent years; small registered investment advisers would spend approximately $5,300 in the first year and $500 in subsequent years; and small service providers would spend approximately $5,300 in the first year and $500 in subsequent years. The estimated cost for small broker-dealers is believed to be an overestimate, especially for the smallest firms as they are believed to have on average simpler arrangements and they may have relationships with larger firms that help with compliance, thus lowering their costs. Additionally, broker-dealers and service providers would incur an expense of about $300 in additional liability insurance premiums for each representative or other individual who would now be considered a fiduciary. Of this expense, $150 is estimated to be paid to the insuring firms and the other $150 is estimated to be paid out as compensation to those harmed, which is counted as a transfer. Any disclosures produced by affected entities would cost, on average, about $1.53 in the first year and about $1.15 in subsequent years. These per-representative and per-disclosure costs are not expected to disproportionately affect small entities.

Although the PTEs allow firms to maintain their existing business models, some small affected entities may determine that it is more cost effective to shift business models. In this scenario, some BDs might incur the costs of switching to becoming RIAs, including training, testing, and licensing costs, at a cost of approximately $5,600 per representative.

Some small service providers may find that the increased costs associated with ERISA fiduciary status outweigh the benefit of continuing to service the ERISA plan market or the IRA market. The Department does not believe that this outcome would be widespread or that it would result in a diminution of the amount or quality of advice available to small or other retirement savers. It is also possible that the economic impact of the rule on small entities would not be as significant as it would be for large entities, because anecdotal evidence indicates that some small entities do not have as many business arrangements that give rise to conflicts of interest. Therefore, they would not be confronted with the same costs to restructure transactions that would be faced by large entities.

L. Paperwork Reduction Act

As part of its continuing effort to reduce paperwork and respondent burden, the Department of Labor conducts a preclearance consultation program to provide the general public and Federal agencies with an opportunity to comment on proposed and continuing collections of information in accordance with the Paperwork Reduction Act of 1995 (PRA) (44 U.S.C. 3506(c)(2)(A)). This helps to ensure that the public understands the Department's collection instructions; respondents can provide the requested data in the desired format; reporting burden (time and financial resources) is minimized; collection instruments are clearly understood; and the Department can properly assess the impact of collection requirements on respondents.

Currently, the Department is soliciting comments concerning the proposed information collection requests (ICRs) included in the ''carve-outs'' section of its proposal to amend its 1975 rule that defines when a person who provides investment advice to an employee benefit plan becomes an ERISA fiduciary. A copy of the ICRs may be obtained by contacting the PRA addressee shown below or at *http://www.RegInfo.gov.*

The Department has submitted a copy of the Conflict of Interest Proposed Rule Carveout Disclosure Requirements to the Office of Management and Budget (OMB) in accordance with 44 U.S.C. 3507(d) for review of its information collections. The Department and OMB are particularly interested in comments that:

- Evaluate whether the collection of information is necessary for the proper performance of the functions of the agency, including whether the information would have practical utility;
- Evaluate the accuracy of the agency's estimate of the burden of the collection of information, including the validity of the methodology and assumptions used;
- Enhance the quality, utility, and clarity of the information to be collected; and
- Minimize the burden of the collection of information on those who are to respond, including through the use of appropriate automated, electronic, mechanical, or other technological collection techniques or other forms of information technology, *e.g.,* permitting electronic submission of responses.

Comments should be sent to the Office of Information and Regulatory Affairs, Office of Management and Budget, Room 10235, New Executive Office Building, Washington, DC 20503; Attention: Desk Officer for the Employee Benefits Security Administration. OMB requests that comments be received within 30 days of publication of the Proposed Investment Advice Initiative to ensure their consideration.

PRA Addressee: Address requests for copies of the ICR to G. Christopher Cosby, Office of Policy and Research, U.S. Department of Labor, Employee Benefits Security Administration, 200 Constitution Avenue NW., Room N–5718, Washington, DC 20210. Telephone (202) 693–8410; Fax: (202) 219–5333. These are not toll-free numbers. ICRs submitted to OMB also are available at *http://www.RegInfo.gov.*

As discussed in detail above, Paragraph (b)(1)(i) of the proposed regulation provides a carve-out to the general definition for advice provided in connection with an arm's length sale, purchase, loan, or bilateral contract between a sophisticated plan investor, which has 100 or more plan participants, and the adviser (''seller's carve-out''). It also applies in connection with an offer to enter into such a transaction or when the person providing the advice is acting as an agent or appraiser for the plan's counterparty. In order to rely on this carve-out, the person must provide

advice to a plan fiduciary who is independent of such person and who exercises authority or control respecting the management or disposition of the plan's assets, with respect to an arm's length sale, purchase, loan or bilateral contract between the plan and the counterparty, or with respect to a proposal to enter into such a sale, purchase, loan or bilateral contract.

The seller's carve-out applies if certain conditions are met. Among these conditions are the following: The adviser must obtain a written representation from the plan fiduciary that (1) the plan fiduciary is a fiduciary who exercises authority or control respecting the management or disposition of the employee benefit plan's assets (as described in section 3(21)(A)(i) of the Act), (2) that the employee benefit plan has 100 or more participants covered under the plan, and that (3) the fiduciary will not rely on the person to act in the best interests of the plan, to provide impartial investment advice, or to give advice in a fiduciary capacity.

Paragraph (b)(3) of the proposed regulation provides a carve-out making clear that persons who merely market and make available, securities or other property through a platform or similar mechanism to an employee benefit plan without regard to the individualized needs of the plan, its participants, or beneficiaries do not act as investment advice fiduciaries. This carve-out applies if the person discloses in writing to the plan fiduciary that the person is not undertaking to provide impartial investment advice or to give advice in a fiduciary capacity.

Paragraph (b)(6) of the proposal makes clear that furnishing and providing certain specified investment educational information and materials (including certain investment allocation models and interactive plan materials) to a plan, plan fiduciary, participant, beneficiary or IRA owner would not constitute the rendering of investment advice if certain conditions are met. One of the conditions is that the asset allocation models or interactive materials must explain all material facts and assumptions on which the models and materials are based and include a statement indicating that, in applying particular asset allocation models to their individual situations, participants, beneficiaries, or IRA owners should consider their other assets, income, and investments in addition to their interests in the plan or IRA to the extent they are not taken into account in the model or estimate.

The seller's carve-out written representation, platform provider carve-out disclosure, and the education carve-out disclosures for asset allocation models and interactive investment materials are information collection requests (ICRs) subject to the Paperwork Reduction Act. The Department has made the following assumptions in order to establish a reasonable estimate of the paperwork burden associated with these ICRs:

- Approximately 43,000 plans would utilize the seller's carve-out;
- Approximately 1,800 service providers would utilize the platform provider carve-out;
- Approximately 2,800 financial institutions would utilize the education carve-out;
- Plans and advisers using the seller's carve-out are entities with financial expertise and would distribute substantially all of the disclosures electronically via means already used in their normal course of business and the costs arising from electronic distribution would be negligible;
- Service providers using the platform provider carve-out already maintain contracts with their customers as a regular and customary business practice and the materials costs arising from inserting the platform provider carve-out into the existing contracts would be negligible;
- Materials costs arising from inserting the required education carve-out disclosure into existing models and interactive materials would be negligible;
- Advisers would use existing in-house resources to prepare the disclosures; and
- The tasks associated with the ICRs would be performed by clerical personnel at an hourly rate of $30.42 and legal professionals at an hourly rate of $129.94.[40]

The Department estimates that each plan would require one hour of legal professional time and 30 minutes of clerical time to produce the seller's carve-out representation. Therefore, the seller's carve-out representation would result in approximately 43,000 hours of legal time at an equivalent cost of approximately $5.6 million. It would also result in approximately 21,000 hours of clerical time at an equivalent cost of approximately $653,000. In total, the burden associated with the seller's carve-out representation is approximately 64,000 hours at an equivalent cost of $6.2 million.

The Department estimates that each service provider using the platform provider carve-out would require ten minutes of legal professional time to draft the needed disclosure. Therefore, the platform provider carve-out disclosure would result in approximately 300 hours of legal time at an equivalent cost of approximately $39,000.

The Department estimates that each financial institution using the education carve-out would require twenty minutes of legal professional time to draft the disclosure. Therefore, this carve-out disclosure would result in approximately 900 hours of legal time at an equivalent cost of approximately $121,000.

In total, the hour burden for the representation and disclosures required by the carve-outs is approximately 66,000 hours at an equivalent cost of $6.4 million.

Because the Department assumes that all disclosures would be distributed electronically or require small amounts of space to include in existing materials, the Department has not associated any cost burden with these ICRs.

These paperwork burden estimates are summarized as follows:

Type of Review: New collection (Request for new OMB Control Number).

Agency: Employee Benefits Security Administration, Department of Labor.

Title: Conflict of Interest Proposed Rule Carveout Disclosure Requirements.

OMB Control Number: 1210—NEW.

Affected Public: Business or other for-profit.

Estimated Number of Respondents: 47,532.

Estimated Number of Annual Responses: 47,532.

Frequency of Response: When engaging in excepted transaction.

Estimated Total Annual Burden Hours: 65,631 hours.

Estimated Total Annual Burden Cost: $0.

M. Congressional Review Act

The proposed rule is subject to the Congressional Review Act provisions of the Small Business Regulatory Enforcement Fairness Act of 1996 (5 U.S.C. 801 *et seq.*) and, if finalized,

[40] The Department's estimated 2015 hourly labor rates include wages, other benefits, and overhead are calculated as follows: Mean wage from the 2013 National Occupational Employment Survey (April 2014, Bureau of Labor Statistics *http://www.bls.gov/news.release/pdf/ocwage.pdf*); wages as a percent of total compensation from the Employer Cost for Employee Compensation (June 2014, Bureau of Labor Statistics *http://www.bls.gov/news.release/ecec.t02.htm*); overhead as a multiple of compensation is assumed to be 25 percent of total compensation for paraprofessionals, 20 percent of compensation for clerical, and 35 percent of compensation for professional; annual inflation assumed to be 2.3 percent annual growth of total labor cost since 2013 (Employment Costs Index data for private industry, September 2014 *http://www.bls.gov/news.release/eci.nr0.htm*).

would be transmitted to Congress and the Comptroller General for review. The proposed rule is a ''major rule'' as that term is defined in 5 U.S.C. 804, because it is likely to result in an annual effect on the economy of $100 million or more.

N. Unfunded Mandates Reform Act

Title II of the Unfunded Mandates Reform Act of 1995 (Pub. L. 104–4) requires each Federal agency to prepare a written statement assessing the effects of any Federal mandate in a proposed or final agency rule that may result in an expenditure of $100 million or more (adjusted annually for inflation with the base year 1995) in any one year by State, local, and tribal governments, in the aggregate, or by the private sector. Such a mandate is deemed to be a ''significant regulatory action.'' The current proposal is expected to have such an impact on the private sector, and the Department therefore hereby provides such an assessment.

The Department is issuing the current proposal under ERISA section 3(21)(A)(ii) (29 U.S.C. 1002(21)(a)(ii)).[41] The Department is charged with interpreting the ERISA and Code provisions that attach fiduciary status to anyone who is paid to provide investment advice to plan or IRA investors. The current proposal would update and supersede the 1975 rule[42] that currently interprets these statutory provisions.

The Department assessed the anticipated benefits and costs of the current proposal pursuant to Executive Order 12866 in the Regulatory Impact Analysis for the current proposal and concluded that its benefits would justify its costs. The Department's complete Regulatory Impact Analysis is available at *www.dol.gov/ebsa/pdf/conflictsofinterestria.pdf.* To summarize, the current proposals' material benefits and costs generally would be confined to the private sector, where plans and IRA investors would, in the Department's estimation, benefit on net, partly at the expense of their fiduciary advisers and upstream financial service and product producers. The Department itself would benefit from increased efficiency in its enforcement activity. The public and overall US economy would benefit from increased compliance with ERISA and the Code and confidence in advisers, as well as from more efficient allocation of investment capital, and gains to investors.

The current proposal is not expected to have any material economic impacts on State, local or tribal governments, or on health, safety, or the natural environment. The North American Securities Administrators Association commented in support of the Department's 2010 proposal.[43]

O. Federalism Statement

Executive Order 13132 (August 4, 1999) outlines fundamental principles of federalism, and requires the adherence to specific criteria by Federal agencies in the process of their formulation and implementation of policies that have substantial direct effects on the States, the relationship between the national government and States, or on the distribution of power and responsibilities among the various levels of government. This proposed rule does not have federalism implications because it has no substantial direct effect on the States, on the relationship between the national government and the States, or on the distribution of power and responsibilities among the various levels of government. Section 514 of ERISA provides, with certain exceptions specifically enumerated, that the provisions of Titles I and IV of ERISA supersede any and all laws of the States as they relate to any employee benefit plan covered under ERISA. The requirements implemented in the proposed rule do not alter the fundamental reporting and disclosure requirements of the statute with respect to employee benefit plans, and as such have no implications for the States or the relationship or distribution of power between the national government and the States.

Statutory Authority

This regulation is proposed pursuant to the authority in section 505 of ERISA (Pub. L. 93–406, 88 Stat. 894; 29 U.S.C. 1135) and section 102 of Plan No. 4 of 1978 (43 FR 47713, October 17, 1978), effective December 31, 1978 (44 FR 1065, January 3, 1979), 3 CFR 1978 Comp. 332, and under Secretary of Labor's Order No. 1–2011, 77 FR 1088 (Jan. 9, 2012).

Withdrawal of Proposed Regulation

Paragraph (c) of the proposed regulation relating to the definition of fiduciary (proposed 29 CFR 2510.3(21)) that was published in the **Federal Register** on October 20, 2010 (75 FR 65263) is hereby withdrawn.

List of Subjects in 29 CFR Parts 2509 and 2510

Employee benefit plans, Employee Retirement Income Security Act, Pensions, Plan assets.

For the reasons set forth in the preamble, the Department is proposing to amend parts 2509 and 2510 of subchapters A and B of Chapter XXV of Title 29 of the Code of Federal Regulations as follows:

SUBCHAPTER A—GENERAL

PART 2509—INTERPRETIVE BULLETINS RELATING TO THE EMPLOYEE RETIREMENT INCOME SECURITY ACT OF 1974

■ 1. The authority citation for part 2509 continues to read as follows:

Authority: 29 U.S.C. 1135. Secretary of Labor's Order 1–2011, 77 FR 1088 (Jan. 9, 2012). Sections 2509.75–10 and 2509.75–2 issued under 29 U.S.C. 1052, 1053, 1054. Sec. 2509.75–5 also issued under 29 U.S.C. 1002. Sec. 2509.95–1 also issued under sec. 625, Pub. L. 109–280, 120 Stat. 780.

§ 2509.96–1 [Removed]

■ 2. Remove § 2509.96–1.

SUBCHAPTER B—DEFINITIONS AND COVERAGE UNDER THE EMPLOYEE RETIREMENT INCOME SECURITY ACT OF 1974

PART 2510—DEFINITIONS OF TERMS USED IN SUBCHAPTERS C, D, E, F, AND G OF THIS CHAPTER

■ 3. The authority citation for part 2510 is revised to read as follows:

Authority: 29 U.S.C. 1002(2), 1002(21), 1002(37), 1002(38), 1002(40), 1031, and 1135; Secretary of Labor's Order 1–2011, 77 FR 1088; Secs. 2510.3–21, 2510.3–101 and 2510.3–102 also issued under Sec. 102 of Reorganization Plan No. 4 of 1978, 5 U.S.C. App. 237. Section 2510.3–38 also issued under Pub. L. 105–72, Sec. 1(b), 111 Stat. 1457 (1997).

■ 4. Revise § 2510.3–21 to read as follows:

§ 2510.3–21 Definition of ''Fiduciary.''

(a) *Investment advice.* For purposes of section 3(21)(A)(ii) of the Employee Retirement Income Security Act of 1974 (Act) and section 4975(e)(3)(B) of the Internal Revenue Code (Code), except as provided in paragraph (b) of this section, a person renders investment advice with respect to moneys or other property of a plan or IRA described in paragraph (f)(2) of this section if—

(1) Such person provides, directly to a plan, plan fiduciary, plan participant or beneficiary, IRA, or IRA owner the

[41] Under section 102 of the Reorganization Plan No. 4 of 1978, the authority of the Secretary of the Treasury to interpret section 4975 of the Code has been transferred, with exceptions not relevant here, to the Secretary of Labor.

[42] 29 CFR 2510.3–21(c).

[43] Available at *http://www.dol.gov/ebsa/pdf/1210-AB32-PH007.pdf.*

following types of advice in exchange for a fee or other compensation, whether direct or indirect:

(i) A recommendation as to the advisability of acquiring, holding, disposing or exchanging securities or other property, including a recommendation to take a distribution of benefits or a recommendation as to the investment of securities or other property to be rolled over or otherwise distributed from the plan or IRA;

(ii) A recommendation as to the management of securities or other property, including recommendations as to the management of securities or other property to be rolled over or otherwise distributed from the plan or IRA;

(iii) An appraisal, fairness opinion, or similar statement whether verbal or written concerning the value of securities or other property if provided in connection with a specific transaction or transactions involving the acquisition, disposition, or exchange, of such securities or other property by the plan or IRA;

(iv) A recommendation of a person who is also going to receive a fee or other compensation for providing any of the types of advice described in paragraphs (i) through (iii); and

(2) Such person, either directly or indirectly (*e.g.,* through or together with any affiliate),—

(i) Represents or acknowledges that it is acting as a fiduciary within the meaning of the Act with respect to the advice described in paragraph (a)(1) of this section; or

(ii) Renders the advice pursuant to a written or verbal agreement, arrangement or understanding that the advice is individualized to, or that such advice is specifically directed to, the advice recipient for consideration in making investment or management decisions with respect to securities or other property of the plan or IRA.

(b) *Carve-outs—investment advice.* Except for persons described in paragraph (a)(2)(i) of this section, the rendering of advice or other communications in conformance with a carve-out set forth in paragraph (b)(1) through (6) of this section shall not cause the person who renders the advice to be treated as a fiduciary under paragraph (a) of this section.

(1) *Counterparties to the plan*—(i) *Counterparty transaction with plan fiduciary with financial expertise.* (A) In such person's capacity as a counterparty (or representative of a counterparty) to an employee benefit plan (as described in section 3(3) of the Act), the person provides advice to a plan fiduciary who is independent of such person and who exercises authority or control with respect to the management or disposition of the plan's assets, with respect to an arm's length sale, purchase, loan or bilateral contract between the plan and the counterparty, or with respect to a proposal to enter into such a sale, purchase, loan or bilateral contract, if, prior to providing any recommendation with respect to the transaction, such person satisfies the requirements of either paragraph (b)(1)(i)(B) or (C) of this section.

(B) Such person—

(*1*) Obtains a written representation from the independent plan fiduciary that the independent fiduciary exercises authority or control with respect to the management or disposition of the employee benefit plan's assets (as described in section 3(21)(A)(i) of the Act), that the employee benefit plan has 100 or more participants covered under the plan, and that the independent fiduciary will not rely on the person to act in the best interests of the plan, to provide impartial investment advice, or to give advice in a fiduciary capacity;

(*2*) Fairly informs the independent plan fiduciary of the existence and nature of the person's financial interests in the transaction;

(*3*) Does not receive a fee or other compensation directly from the plan, or plan fiduciary, for the provision of investment advice (as opposed to other services) in connection with the transaction; and

(*4*) Knows or reasonably believes that the independent plan fiduciary has sufficient expertise to evaluate the transaction and to determine whether the transaction is prudent and in the best interest of the plan participants (the person may rely on written representations from the plan or the plan fiduciary to satisfy this subsection (b)(1)(i)(B)(*4*)).

(C) Such person—

(*1*) Knows or reasonably believes that the independent plan fiduciary has responsibility for managing at least $100 million in employee benefit plan assets (for purposes of this paragraph (b)(1)(i)(C), when dealing with an individual employee benefit plan, a person may rely on the information on the most recent Form 5500 Annual Return/Report filed for the plan to determine the value and, in the case of an independent fiduciary acting as an asset manager for multiple employee benefit plans, a person may rely on representations from the independent plan fiduciary regarding the value of employee benefit plan assets under management);

(*2*) Fairly informs the independent plan fiduciary that the person is not undertaking to provide impartial investment advice, or to give advice in a fiduciary capacity; and

(*3*) Does not receive a fee or other compensation directly from the plan, or plan fiduciary, for the provision of investment advice (as opposed to other services) in connection with the transaction.

(ii) *Swap and security-based swap transactions.* The person is a counterparty to an employee benefit plan (as described in section 3(3) of the Act) in connection with a swap or security-based swap, as defined in section 1(a) of the Commodity Exchange Act (7 U.S.C. 1(a) and section 3(a) of the Securities Exchange Act (15 U.S.C. 78c(a)), if—

(A) The plan is represented by a fiduciary independent of the person;

(B) The person is a swap dealer, security-based swap dealer, major swap participant, or major security-based swap participant;

(C) The person (if a swap dealer or security-based swap dealer), is not acting as an advisor to the plan (within the meaning of section 4s(h) of the Commodity Exchange Act or section 15F(h) of the Securities Exchange Act of 1934) in connection with the transaction; and

(D) In advance of providing any recommendations with respect to the transaction, the person obtains a written representation from the independent plan fiduciary, that the fiduciary will not rely on recommendations provided by the person.

(2) *Employees.* In his or her capacity as an employee of any employer or employee organization sponsoring the employee benefit plan (as described in section 3(3) of the Act), the person provides the advice to a plan fiduciary, and he or she receives no fee or other compensation, direct or indirect, in connection with the advice beyond the employee's normal compensation for work performed for the employer or employee organization.

(3) *Platform providers.* The person merely markets and makes available to an employee benefit plan (as described in section 3(3) of the Act), without regard to the individualized needs of the plan, its participants, or beneficiaries, securities or other property through a platform or similar mechanism from which a plan fiduciary may select or monitor investment alternatives, including qualified default investment alternatives, into which plan participants or beneficiaries may direct the investment of assets held in, or contributed to, their individual accounts, if the person discloses in writing to the plan fiduciary that the person is not undertaking to provide

impartial investment advice or to give advice in a fiduciary capacity.

(4) *Selection and monitoring assistance.* In connection with the activities described in paragraph (b)(3) of this section with respect to an employee benefit plan (as described in section 3(3) of the Act), the person—

(i) Merely identifies investment alternatives that meet objective criteria specified by the plan fiduciary (*e.g.,* stated parameters concerning expense ratios, size of fund, type of asset, credit quality); or

(ii) Merely provides objective financial data and comparisons with independent benchmarks to the plan fiduciary.

(5) *Financial reports and valuations.* The person provides an appraisal, fairness opinion, or statement of value to—

(i) An employee stock ownership plan (as defined in section 407(d)(6) of the Act) regarding employer securities (as defined section 407(d)(5) of the Act);

(ii) An investment fund, such as a collective investment fund or pooled separate account, in which more than one unaffiliated plan has an investment, or which holds plan assets of more than one unaffiliated plan under 29 CFR 2510.3–101; or

(iii) A plan, a plan fiduciary, a plan participant or beneficiary, an IRA or IRA owner solely for purposes of compliance with the reporting and disclosure provisions under the Act, the Code, and the regulations, forms and schedules issued thereunder, or any applicable reporting or disclosure requirement under a Federal or state law, rule or regulation or self-regulatory organization rule or regulation.

(6) *Investment education.* The person furnishes or makes available any of the following categories of investment-related information and materials described in paragraphs (b)(6)(i) through (iv) of this section to a plan, plan fiduciary, participant or beneficiary, IRA or IRA owner irrespective of who provides or makes available the information and materials (*e.g.,* plan sponsor, fiduciary or service provider), the frequency with which the information and materials are provided, the form in which the information and materials are provided (*e.g.,* on an individual or group basis, in writing or orally, or via call center, video or computer software), or whether an identified category of information and materials is furnished or made available alone or in combination with other categories of information and materials identified in paragraphs (b)(6)(i) through (iv), provided that the information and materials do not include (standing alone or in combination with other materials) recommendations with respect to specific investment products or specific plan or IRA alternatives, or recommendations on investment, management, or value of a particular security or securities, or other property.

(i) *Plan information.* Information and materials that, without reference to the appropriateness of any individual investment alternative or any individual benefit distribution option for the plan or IRA, or a particular participant or beneficiary or IRA owner, describe the terms or operation of the plan or IRA, inform a plan fiduciary, participant, beneficiary, or IRA owner about the benefits of plan or IRA participation, the benefits of increasing plan or IRA contributions, the impact of preretirement withdrawals on retirement income, retirement income needs, varying forms of distributions, including rollovers, annuitization and other forms of lifetime income payment options (*e.g.,* immediate annuity, deferred annuity, or incremental purchase of deferred annuity), advantages, disadvantages and risks of different forms of distributions, or describe investment objectives and philosophies, risk and return characteristics, historical return information or related prospectuses of investment alternatives under the plan or IRA.

(ii) *General financial, investment and retirement information.* Information and materials on financial, investment and retirement matters that do not address specific investment products, specific plan or IRA alternatives or distribution options available to the plan or IRA or to participants, beneficiaries and IRA owners, or specific alternatives or services offered outside the plan or IRA, and inform the plan fiduciary, participant or beneficiary, or IRA owner about—

(A) General financial and investment concepts, such as risk and return, diversification, dollar cost averaging, compounded return, and tax deferred investment;

(B) Historic differences in rates of return between different asset classes (*e.g.,* equities, bonds, or cash) based on standard market indices;

(C) Effects of inflation;

(D) Estimating future retirement income needs;

(E) Determining investment time horizons;

(F) Assessing risk tolerance;

(G) Retirement-related risks (*e.g.,* longevity risks, market/interest rates, inflation, health care and other expenses); and

(H) General methods and strategies for managing assets in retirement (*e.g.,* systematic withdrawal payments, annuitization, guaranteed minimum withdrawal benefits), including those offered outside the plan or IRA.

(iii) *Asset allocation models.* Information and materials (*e.g.,* pie charts, graphs, or case studies) that provide a plan fiduciary, participant or beneficiary, or IRA owner with models of asset allocation portfolios of hypothetical individuals with different time horizons (which may extend beyond an individual's retirement date) and risk profiles, where—

(A) Such models are based on generally accepted investments theories that take into account the historic returns of different asset classes (*e.g.,* equities, bonds, or cash) over defined periods of time;

(B) All material facts and assumptions on which such models are based (*e.g.,* retirement ages, life expectancies, income levels, financial resources, replacement income ratios, inflation rates, and rates of return) accompany the models;

(C) Such models do not include or identify any specific investment product or specific alternative available under the plan or IRA; and

(D) The asset allocation models are accompanied by a statement indicating that, in applying particular asset allocation models to their individual situations, participants, beneficiaries, or IRA owners should consider their other assets, income, and investments (*e.g.,* equity in a home, Social Security benefits, individual retirement plan investments, savings accounts and interests in other qualified and non-qualified plans) in addition to their interests in the plan or IRA, to the extent those items are not taken into account in the model or estimate.

(iv) *Interactive investment materials.* Questionnaires, worksheets, software, and similar materials which provide a plan fiduciary, participant or beneficiary, or IRA owners the means to estimate future retirement income needs and assess the impact of different asset allocations on retirement income; questionnaires, worksheets, software and similar materials which allow a plan fiduciary, participant or beneficiary, or IRA owners to evaluate distribution options, products or vehicles by providing information under paragraphs (b)(6)(i) and (ii) of this section; questionnaires, worksheets, software, and similar materials that provide a plan fiduciary, participant or beneficiary, or IRA owner the means to estimate a retirement income stream

that could be generated by an actual or hypothetical account balance, where—

(A) Such materials are based on generally accepted investment theories that take into account the historic returns of different asset classes (*e.g.,* equities, bonds, or cash) over defined periods of time;

(B) There is an objective correlation between the asset allocations generated by the materials and the information and data supplied by the participant, beneficiary or IRA owner;

(C) There is an objective correlation between the income stream generated by the materials and the information and data supplied by the participant, beneficiary or IRA owner;

(D) All material facts and assumptions (*e.g.,* retirement ages, life expectancies, income levels, financial resources, replacement income ratios, inflation rates, rates of return and other features and rates specific to income annuities or systematic withdrawal plan) that may affect a participant's, beneficiary's or IRA owner's assessment of the different asset allocations or different income streams accompany the materials or are specified by the participant, beneficiary or IRA owner;

(E) The materials do not include or identify any specific investment alternative available or distribution option available under the plan or IRA, unless such alternative or option is specified by the participant, beneficiary or IRA owner; and

(F) The materials either take into account other assets, income and investments (*e.g.,* equity in a home, Social Security benefits, individual retirement account/annuity investments, savings accounts, and interests in other qualified and non-qualified plans) or are accompanied by a statement indicating that, in applying particular asset allocations to their individual situations, or in assessing the adequacy of an estimated income stream, participants, beneficiaries or IRA owners should consider their other assets, income, and investments in addition to their interests in the plan or IRA.

(v) The information and materials described in paragraphs (b)(6)(i) through (iv) of this section represent examples of the type of information and materials that may be furnished to participants, beneficiaries and IRA owners without such information and materials constituting investment advice. Determinations as to whether the provision of any information, materials or educational services not described herein constitutes the rendering of investment advice must be made by reference to the criteria set forth in paragraph (a) of this section.

(c) *Scope of fiduciary duty—investment advice.* A person who is a fiduciary with respect to an employee benefit plan or IRA by reason of rendering investment advice (as defined in paragraph (a) of this section) for a fee or other compensation, direct or indirect, with respect to any securities or other property of such plan, or having any authority or responsibility to do so, shall not be deemed to be a fiduciary regarding any assets of the plan or IRA with respect to which such person does not have any discretionary authority, discretionary control or discretionary responsibility, does not exercise any authority or control, does not render investment advice (as defined in paragraph (a)(1) of this section) for a fee or other compensation, and does not have any authority or responsibility to render such investment advice, provided that nothing in this paragraph shall be deemed to:

(1) Exempt such person from the provisions of section 405(a) of the Act concerning liability for fiduciary breaches by other fiduciaries with respect to any assets of the plan; or

(2) Exclude such person from the definition of the term ''party in interest'' (as set forth in section 3(14)(B) of the Act or ''disqualified person'' as set forth in section 4975(e)(2) of the Code) with respect to a plan.

(d) *Execution of securities transactions.* (1) A person who is a broker or dealer registered under the Securities Exchange Act of 1934, a reporting dealer who makes primary markets in securities of the United States Government or of an agency of the United States Government and reports daily to the Federal Reserve Bank of New York its positions with respect to such securities and borrowings thereon, or a bank supervised by the United States or a State, shall not be deemed to be a fiduciary, within the meaning of section 3(21)(A) of the Act or section 4975(e)(3)(B) of the Code, with respect to an employee benefit plan or IRA solely because such person executes transactions for the purchase or sale of securities on behalf of such plan in the ordinary course of its business as a broker, dealer, or bank, pursuant to instructions of a fiduciary with respect to such plan or IRA, if:

(i) Neither the fiduciary nor any affiliate of such fiduciary is such broker, dealer, or bank; and

(ii) The instructions specify:

(A) The security to be purchased or sold;

(B) A price range within which such security is to be purchased or sold, or, if such security is issued by an open-end investment company registered under the Investment Company Act of 1940 (15 U.S.C. 80a–1, *et seq.*), a price which is determined in accordance with Rule 22c1 under the Investment Company Act of 1940 (17 CFR270.22c1);

(C) A time span during which such security may be purchased or sold (not to exceed five business days); and

(D) The minimum or maximum quantity of such security which may be purchased or sold within such price range, or, in the case of a security issued by an open-end investment company registered under the Investment Company Act of 1940, the minimum or maximum quantity of such security which may be purchased or sold, or the value of such security in dollar amount which may be purchased or sold, at the price referred to in paragraph (d)(1)(ii)(B) of this section.

(2) A person who is a broker-dealer, reporting dealer, or bank which is a fiduciary with respect to an employee benefit plan or IRA solely by reason of the possession or exercise of discretionary authority or discretionary control in the management of the plan or IRA, or the management or disposition of plan or IRA assets in connection with the execution of a transaction or transactions for the purchase or sale of securities on behalf of such plan or IRA which fails to comply with the provisions of paragraph (d)(1) of this section, shall not be deemed to be a fiduciary regarding any assets of the plan or IRA with respect to which such broker-dealer, reporting dealer or bank does not have any discretionary authority, discretionary control or discretionary responsibility, does not exercise any authority or control, does not render investment advice (as defined in paragraph (a) of this section) for a fee or other compensation, and does not have any authority or responsibility to render such investment advice, provided that nothing in this paragraph shall be deemed to:

(i) Exempt such broker-dealer, reporting dealer, or bank from the provisions of section 405(a) of the Act concerning liability for fiduciary breaches by other fiduciaries with respect to any assets of the plan; or

(ii) Exclude such broker-dealer, reporting dealer, or bank from the definition of the term party in interest (as set forth in section 3(14)(B) of the Act) or disqualified person 4975(e)(2) of the Code with respect to any assets of the plan or IRA.

(e) *Internal Revenue Code.* Section 4975(e)(3) of the Code contains provisions parallel to section 3(21)(A) of the Act which define the term ''fiduciary'' for purposes of the prohibited transaction provisions in Code section 4975. Effective December 31, 1978, section 102 of the Reorganization Plan No. 4 of 1978, 5 U.S.C. App. 237 transferred the authority of the Secretary of the Treasury to promulgate regulations of the type published herein to the Secretary of Labor. All references herein to section 3(21)(A) of the Act should be read to include reference to the parallel provisions of section 4975(e)(3) of the Code. Furthermore, the provisions of this section shall apply for purposes of the application of Code section 4975 with respect to any plan described in Code section 4975(e)(1).

(f) *Definitions.* For purposes of this section—

(1) ''Recommendation'' means a communication that, based on its content, context, and presentation, would reasonably be viewed as a suggestion that the advice recipient engage in or refrain from taking a particular course of action.

(2)(i) ''Plan'' means any employee benefit plan described in section 3(3) of the Act and any plan described in section 4975(e)(1)(A) of the Code, and

(ii) ''IRA'' means any trust, account or annuity described in Code section 4975(e)(1)(B) through (F), including, for example, an individual retirement account described in section 408(a) of the Code and a health savings account described in section 223(d) of the Code.

(3) ''Plan participant'' means for a plan described in section 3(3) of the Act, a person described in section 3(7) of the Act.

(4) ''IRA owner'' means with respect to an IRA either the person who is the owner of the IRA or the person for whose benefit the IRA was established.

(5) ''Plan fiduciary'' means a person described in section (3)(21) of the Act and 4975(e)(3) of the Code.

(6) ''Fee or other compensation, direct or indirect'' for purposes of this section and section 3(21)(A)(ii) of the Act, means any fee or compensation for the advice received by the person (or by an affiliate) from any source and any fee or compensation incident to the transaction in which the investment advice has been rendered or will be rendered. The term fee or other compensation includes, for example, brokerage fees, mutual fund and insurance sales commissions.

(7) ''Affiliate'' includes: Any person directly or indirectly, through one or more intermediaries, controlling, controlled by, or under common control with such person; any officer, director, partner, employee or relative (as defined in section 3(15) of the Act) of such person; and any corporation or partnership of which such person is an officer, director or partner.

(8) ''Control'' for purposes of paragraph (f)(7) of this section means the power to exercise a controlling influence over the management or policies of a person other than an individual.

Signed at Washington, DC, this 14th day of April, 2015.

Phyllis C. Borzi,

Assistant Secretary, Employee Benefits Security Administration, Department of Labor.

[FR Doc. 2015–08831 Filed 4–15–15; 11:15 am]

BILLING CODE 4510–29–P

DEPARTMENT OF LABOR

Employee Benefits Security Administration

29 CFR Part 2550

[Application No. D–11712]

ZRIN 1210–ZA25

Proposed Best Interest Contract Exemption

AGENCY: Employee Benefits Security Administration (EBSA), U.S. Department of Labor.

ACTION: Notice of Proposed Class Exemption.

SUMMARY: This document contains a notice of pendency before the U.S. Department of Labor of a proposed exemption from certain prohibited transactions provisions of the Employee Retirement Income Security Act of 1974 (ERISA) and the Internal Revenue Code (the Code). The provisions at issue generally prohibit fiduciaries with respect to employee benefit plans and individual retirement accounts (IRAs) from engaging in self-dealing and receiving compensation from third parties in connection with transactions involving the plans and IRAs. The exemption proposed in this notice would allow entities such as broker-dealers and insurance agents that are fiduciaries by reason of the provision of investment advice to receive such compensation when plan participants and beneficiaries, IRA owners, and certain small plans purchase, hold or sell certain investment products in accordance with the fiduciaries' advice, under protective conditions to safeguard the interests of the plans, participants and beneficiaries, and IRA owners. The proposed exemption would affect participants and beneficiaries of plans, IRA owners and fiduciaries with respect to such plans and IRAs.

DATES: *Comments:* Written comments concerning the proposed class exemption must be received by the Department on or before July 6, 2015.

Applicability: The Department proposes to make this exemption available eight months after publication of the final exemption in the **Federal Register**. We request comment below on whether the applicability date of certain conditions should be delayed.

ADDRESSES: All written comments concerning the proposed class exemption should be sent to the Office of Exemption Determinations by any of the following methods, identified by ZRIN: 1210–ZA25:

Federal eRulemaking Portal: http://www.regulations.gov at Docket ID number: EBSA–2014–0016. Follow the instructions for submitting comments.

Email to: e-OED@dol.gov.

Fax to: (202) 693–8474.

Mail: Office of Exemption Determinations, Employee Benefits Security Administration, (Attention: D–11712), U.S. Department of Labor, 200 Constitution Avenue NW., Suite 400, Washington DC 20210.

Hand Delivery/Courier: Office of Exemption Determinations, Employee Benefits Security Administration, (Attention: D–11712), U.S. Department of Labor, 122 C St. NW., Suite 400, Washington DC 20001.

Instructions. All comments must be received by the end of the comment period. The comments received will be available for public inspection in the Public Disclosure Room of the Employee Benefits Security Administration, U.S. Department of Labor, Room N–1513, 200 Constitution Avenue NW., Washington, DC 20210. Comments will also be available online at *www.regulations.gov,* at Docket ID number: EBSA–2014–0016 and *www.dol.gov/ebsa,* at no charge.

Warning: All comments will be made available to the public. Do not include any personally identifiable information (such as Social Security number, name, address, or other contact information) or confidential business information that you do not want publicly disclosed. All comments may be posted on the Internet and can be retrieved by most Internet search engines.

FOR FURTHER INFORMATION CONTACT: Karen E. Lloyd or Brian L. Shiker, Office of Exemption Determinations, Employee Benefits Security Administration, U.S. Department of Labor (202) 693–8824 (this is not a toll-free number).

SUPPLEMENTARY INFORMATION: The Department is proposing this class exemption on its own motion, pursuant to ERISA section 408(a) and Code section 4975(c)(2), and in accordance with the procedures set forth in 29 CFR part 2570 (76 FR 66637 (October 27, 2011)).

Public Hearing: The Department plans to hold an administrative hearing within 30 days of the close of the comment period. The Department will ensure ample opportunity for public comment by reopening the record following the hearing and publication of the hearing transcript. Specific information regarding the date, location and submission of requests to testify will be published in a notice in the **Federal Register**.

Executive Summary

Purpose of Regulatory Action

The Department is proposing this exemption in connection with its proposed regulation under ERISA section 3(21)(A)(ii) and Code section 4975(e)(3)(B) (Proposed Regulation), published elsewhere in this issue of the **Federal Register**. The Proposed Regulation would amend the definition of a ''fiduciary'' under ERISA and the Code to specify when a person is a fiduciary by reason of the provision of investment advice for a fee or other compensation regarding assets of a plan or IRA. If adopted, the Proposed Regulation would replace an existing regulation dating to 1975. The Proposed Regulation is intended to take into account the advent of 401(k) plans and IRAs, the dramatic increase in rollovers, and other developments that have transformed the retirement plan landscape and the associated investment market over the four decades since the existing regulation was issued. In light of the extensive changes in retirement investment practices and relationships, the Proposed Regulation would update existing rules to distinguish more appropriately between the sorts of advice relationships that should be treated as fiduciary in nature and those that should not.

The exemption proposed in this notice (''the Best Interest Contract Exemption'') was developed to promote the provision of investment advice that is in the best interest of retail investors such as plan participants and beneficiaries, IRA owners, and small plans. ERISA and the Code generally prohibit fiduciaries from receiving payments from third parties and from acting on conflicts of interest, including using their authority to affect or increase their own compensation, in connection with transactions involving a plan or IRA. Certain types of fees and compensation common in the retail market, such as brokerage or insurance commissions, 12b-1 fees and revenue sharing payments, fall within these prohibitions when received by fiduciaries as a result of transactions involving advice to the plan participants and beneficiaries, IRA owners and small plan sponsors. To facilitate continued provision of advice to such retail investors and under conditions designed to safeguard the interests of these investors, the exemption would allow certain investment advice fiduciaries, including broker-dealers and insurance agents, to receive these various forms of compensation that, in the absence of an exemption, would not be permitted under ERISA and the Code.

Rather than create a set of highly prescriptive transaction-specific exemptions, which has generally been the regulatory approach to date, the proposed exemption would flexibly accommodate a wide range of current business practices, while minimizing the harmful impact of conflicts of interest on the quality of advice. The Department has sought to preserve beneficial business models by taking a standards-based approach that will broadly permit firms to continue to rely on common fee practices, as long as they are willing to adhere to basic standards aimed at ensuring that their advice is in the best interest of their customers.

ERISA section 408(a) specifically authorizes the Secretary of Labor to grant administrative exemptions from ERISA's prohibited transaction provisions.[1] Regulations at 29 CFR 2570.30 to 2570.52 describe the procedures for applying for an administrative exemption. Before granting an exemption, the Department must find that the exemption is administratively feasible, in the interests of plans and their participants and beneficiaries and IRA owners, and protective of the rights of participants and beneficiaries of plans and IRA owners. Interested parties are permitted to submit comments to the Department through July 6, 2015. The Department plans to hold an administrative hearing within 30 days of the close of the comment period.

Summary of the Major Provisions

The proposed exemption would apply to compensation received by investment advice fiduciaries—both individual ''advisers'' [2] and the ''financial institutions'' that employ or otherwise contract with them—and their affiliates and related entities that is provided in connection with the purchase, sale or holding of certain assets by plans and IRAs. In particular, the exemption would apply when prohibited compensation is received as a result of advice to retail ''retirement investors'' including plan participants and beneficiaries, IRA owners, and plan sponsors (or their employees, officers or directors) of plans with fewer than 100 participants making investment decisions on behalf of the plans and IRAs.

In order to protect the interests of the plan participants and beneficiaries, IRA owners, and small plan sponsors, the exemption would require the adviser and financial institution to contractually acknowledge fiduciary status, commit to adhere to basic standards of impartial conduct, warrant that they have adopted policies and procedures reasonably designed to mitigate any harmful impact of conflicts of interest, and disclose basic information on their conflicts of interest and on the cost of their advice. The adviser and firm must commit to fundamental obligations of fair dealing and fiduciary conduct—to give advice that is in the customer's best interest; avoid misleading statements; receive no more than reasonable compensation; and comply with applicable federal and state laws governing advice. This standards-based approach aligns the adviser's interests with those of the plan or IRA customer, while leaving the adviser and employing firm the flexibility and discretion necessary to determine how best to satisfy these basic standards in light of the unique attributes of their business. All financial institutions relying on the exemption would be required to notify the Department in advance of doing so. Finally, all financial institutions making use of the exemption would have to maintain certain data, and make it available to the Department, to help

[1] Code section 4975(c)(2) authorizes the Secretary of the Treasury to grant exemptions from the parallel prohibited transaction provisions of the Code. Reorganization Plan No. 4 of 1978 (5 U.S.C. app. at 214 (2000)) generally transferred the authority of the Secretary of the Treasury to grant administrative exemptions under Code section 4975 to the Secretary of Labor. This proposed exemption would provide relief from the indicated prohibited transaction provisions of both ERISA and the Code.

[2] By using the term ''adviser,'' the Department does not intend to limit the exemption to investment advisers registered under the Investment Advisers Act of 1940 or under state law. As explained herein, an adviser is an individual who can be a representative of a registered investment adviser, a bank or similar financial institution, an insurance company, or a broker-dealer.

evaluate the effectiveness of the exemption in safeguarding the interests of the plan participants and beneficiaries, IRA owners, and small plans.

Executive Order 12866 and 13563 Statement

Under Executive Orders 12866 and 13563, the Department must determine whether a regulatory action is ''significant'' and therefore subject to the requirements of the Executive Order and subject to review by the Office of Management and Budget (OMB). Executive Orders 13563 and 12866 direct agencies to assess all costs and benefits of available regulatory alternatives and, if regulation is necessary, to select regulatory approaches that maximize net benefits (including potential economic, environmental, public health and safety effects, distributive impacts, and equity). Executive Order 13563 emphasizes the importance of quantifying both costs and benefits, of reducing costs, of harmonizing and streamlining rules, and of promoting flexibility. It also requires federal agencies to develop a plan under which they will periodically review their existing significant regulations to make regulatory programs more effective or less burdensome in achieving their regulatory objectives.

Under Executive Order 12866, ''significant'' regulatory actions are subject to the requirements of the Executive Order and review by the Office of Management and Budget (OMB). Section 3(f) of Executive Order 12866, defines a ''significant regulatory action'' as an action that is likely to result in a rule (1) having an annual effect on the economy of $100 million or more, or adversely and materially affecting a sector of the economy, productivity, competition, jobs, the environment, public health or safety, or State, local or tribal governments or communities (also referred to as an ''economically significant'' regulatory action); (2) creating serious inconsistency or otherwise interfering with an action taken or planned by another agency; (3) materially altering the budgetary impacts of entitlement grants, user fees, or loan programs or the rights and obligations of recipients thereof; or (4) raising novel legal or policy issues arising out of legal mandates, the President's priorities, or the principles set forth in the Executive Order. Pursuant to the terms of the Executive Order, OMB has determined that this action is ''significant'' within the meaning of Section 3(f)(4) of the Executive Order. Accordingly, the Department has undertaken an assessment of the costs and benefits of the proposed exemption, and OMB has reviewed this regulatory action.

Background

Proposed Regulation Defining a Fiduciary

As explained more fully in the preamble to the Department's Proposed Regulation under ERISA section 3(21)(A)(ii) and Code section 4975(e)(3)(B), also published in this issue of the **Federal Register**, ERISA is a comprehensive statute designed to protect the interests of plan participants and beneficiaries, the integrity of employee benefit plans, and the security of retirement, health, and other critical benefits. The broad public interest in ERISA-covered plans is reflected in its imposition of fiduciary responsibilities on parties engaging in important plan activities, as well as in the tax-favored status of plan assets and investments. One of the chief ways in which ERISA protects employee benefit plans is by requiring that plan fiduciaries comply with fundamental obligations rooted in the law of trusts. In particular, plan fiduciaries must manage plan assets prudently and with undivided loyalty to the plans and their participants and beneficiaries.[3] In addition, they must refrain from engaging in ''prohibited transactions,'' which ERISA does not permit because of the dangers posed by the fiduciaries' conflicts of interest with respect to the transactions.[4] When fiduciaries violate ERISA's fiduciary duties or the prohibited transaction rules, they may be held personally liable for the breach.[5] In addition, violations of the prohibited transaction rules are subject to excise taxes under the Code.

The Code also has rules regarding fiduciary conduct with respect to tax-favored accounts that are not generally covered by ERISA, such as IRAs. Although ERISA's general fiduciary obligations of prudence and loyalty do not govern the fiduciaries of IRAs, these fiduciaries are subject to the prohibited transaction rules. In this context, fiduciaries engaging in the prohibited transactions are subject to an excise tax enforced by the Internal Revenue Service. Unlike participants in plans covered by Title I of ERISA, IRA owners do not have a statutory right to bring suit against fiduciaries for violation of the prohibited transaction rules and fiduciaries are not personally liable to IRA owners for the losses caused by their misconduct. Nor can the Secretary of Labor bring suit to enforce the prohibited transactions rules on behalf of IRA owners. The exemption proposed herein, as well as the Proposed Class Exemption for Principal Transactions in Certain Debt Securities between Investment Advice Fiduciaries and Employee Benefit Plans and IRAs, published elsewhere in this issue of the **Federal Register**, would create contractual obligations for fiduciaries to adhere to certain standards (the Impartial Conduct Standards) if they want to take advantage of the exemption. IRA owners would have a right to enforce these new contractual rights.

Under the statutory framework, the determination of who is a ''fiduciary'' is of central importance. Many of ERISA's and the Code's protections, duties, and liabilities hinge on fiduciary status. In relevant part, ERISA section 3(21)(A) and Code section 4975(e)(3) provide that a person is a fiduciary with respect to a plan or IRA to the extent he or she (i) exercises any discretionary authority or discretionary control with respect to management of such plan or IRA, or exercises any authority or control with respect to management or disposition of its assets; (ii) renders investment advice for a fee or other compensation, direct or indirect, with respect to any moneys or other property of such plan or IRA, or has any authority or responsibility to do so; or, (iii) has any discretionary authority or discretionary responsibility in the administration of such plan or IRA.

The statutory definition deliberately casts a wide net in assigning fiduciary responsibility with respect to plan and IRA assets. Thus, ''any authority or control'' over plan or IRA assets is sufficient to confer fiduciary status, and any persons who render ''investment advice for a fee or other compensation, direct or indirect'' are fiduciaries, regardless of whether they have direct control over the plan's or IRA's assets and regardless of their status as an investment adviser or broker under the federal securities laws. The statutory definition and associated responsibilities were enacted to ensure that plans, plan participants, and IRA owners can depend on persons who provide investment advice for a fee to provide recommendations that are untainted by conflicts of interest. In the absence of fiduciary status, the providers of investment advice are neither subject to ERISA's fundamental fiduciary standards, nor accountable for imprudent, disloyal, or tainted advice under ERISA or the Code, no matter

[3] ERISA section 404(a).

[4] ERISA section 406. ERISA also prohibits certain transactions between a plan and a ''party in interest.''

[5] ERISA section 409; *see also* ERISA section 405.

how egregious the misconduct or how substantial the losses. Retirement investors typically are not financial experts and consequently must rely on professional advice to make critical investment decisions. In the years since then, the significance of financial advice has become still greater with increased reliance on participant directed plans and IRAs for the provision of retirement benefits.

In 1975, the Department issued a regulation, at 29 CFR 2510.3–21(c)(1975), defining the circumstances under which a person is treated as providing ''investment advice'' to an employee benefit plan within the meaning of ERISA section 3(21)(A)(ii) (the ''1975 regulation'').[6] The 1975 regulation narrowed the scope of the statutory definition of fiduciary investment advice by creating a five-part test that must be satisfied before a person can be treated as rendering investment advice for a fee. Under the 1975 regulation, for advice to constitute ''investment advice,'' an adviser who does not have discretionary authority or control with respect to the purchase or sale of securities or other property of the plan must (1) render advice as to the value of securities or other property, or make recommendations as to the advisability of investing in, purchasing or selling securities or other property (2) on a regular basis (3) pursuant to a mutual agreement, arrangement or understanding, with the plan or a plan fiduciary that (4) the advice will serve as a primary basis for investment decisions with respect to plan assets, and that (5) the advice will be individualized based on the particular needs of the plan. The regulation provides that an adviser is a fiduciary with respect to any particular instance of advice only if he or she meets each and every element of the five-part test with respect to the particular advice recipient or plan at issue. A 1976 Department of Labor Advisory Opinion further limited the application of the statutory definition of ''investment advice'' by stating that valuations of employer securities in connection with employee stock ownership plan (ESOP) purchases would not be considered fiduciary advice.[7]

As the marketplace for financial services has developed in the years since 1975, the five-part test may now undermine, rather than promote, the statutes' text and purposes. The narrowness of the 1975 regulation allows advisers, brokers, consultants and valuation firms to play a central role in shaping plan investments, without ensuring the accountability that Congress intended for persons having such influence and responsibility. Even when plan sponsors, participants, beneficiaries and IRA owners clearly rely on paid consultants for impartial guidance, the regulation allows many advisers to avoid fiduciary status and the accompanying fiduciary obligations of care and prohibitions on disloyal and conflicted transactions. As a consequence, under ERISA and the Code, these advisers can steer customers to investments based on their own self-interest, give imprudent advice, and engage in transactions that would otherwise be prohibited by ERISA and the Code.

In the Department's Proposed Regulation defining a fiduciary under ERISA section 3(21)(A)(ii) and Code section 4975(e)(3)(B), the Department seeks to replace the existing regulation with one that more appropriately distinguishes between the sorts of advice relationships that should be treated as fiduciary in nature and those that should not, in light of the legal framework and financial marketplace in which IRAs and plans currently operate.[8] Under the Proposed Regulation, plans include IRAs.

The Proposed Regulation describes the types of advice that constitute ''investment advice'' with respect to plan or IRA assets for purposes of the definition of a fiduciary at ERISA section 3(21)(A)(ii) and Code section 4975(e)(3)(B). The proposal provides, subject to certain carve-outs, that a person renders investment advice with respect to assets of a plan or IRA if, among other things, the person provides, directly to a plan, a plan fiduciary, a plan participant or beneficiary, IRA or IRA owner, one of the following types of advice:

(1) A recommendation as to the advisability of acquiring, holding, disposing or exchanging securities or other property, including a recommendation to take a distribution of benefits or a recommendation as to the investment of securities or other property to be rolled over or otherwise distributed from a plan or IRA;

(2) A recommendation as to the management of securities or other property, including recommendations as to the management of securities or other property to be rolled over or otherwise distributed from the plan or IRA;

(3) An appraisal, fairness opinion or similar statement, whether verbal or written, concerning the value of securities or other property, if provided in connection with a specific transaction or transactions involving the acquisition, disposition or exchange of such securities or other property by the plan or IRA; and

(4) a recommendation of a person who is also going to receive a fee or other compensation in providing any of the types of advice described in paragraphs (1) through (3), above.

In addition, to be a fiduciary, such person must either (i) represent or acknowledge that it is acting as a fiduciary within the meaning of ERISA (or the Code) with respect to the advice, or (ii) render the advice pursuant to a written or verbal agreement, arrangement or understanding that the advice is individualized to, or that such advice is specifically directed to, the advice recipient for consideration in making investment or management decisions with respect to securities or other property of the plan or IRA.

In the Proposed Regulation, the Department refers to FINRA guidance on whether particular communications should be viewed as ''recommendations''[9] within the meaning of the fiduciary definition, and requests comment on whether the Proposed Regulation should adhere to or adopt some or all of the standards developed by FINRA in defining communications which rise to the level of a recommendation. For more detailed information regarding the Proposed Regulation, see the Notice of the Proposed Regulation published in this issue of the **Federal Register**.

For advisers who do not represent that they are acting as ERISA or Code fiduciaries, the Proposed Regulation provides that advice rendered in conformance with certain carve-outs will not cause the adviser to be treated as a fiduciary under ERISA or the Code. For example, under the seller's carve-out, counterparties in arm's length transactions with plans may make investment recommendations without acting as fiduciaries if certain conditions are met.[10] The proposal also

[6] The Department of Treasury issued a virtually identical regulation, at 26 CFR 54.4975–9(c), which interprets Code section 4975(e)(3).

[7] Advisory Opinion 76–65A (June 7, 1976).

[8] The Department initially proposed an amendment to its regulation defining a fiduciary under ERISA section 3(21)(A)(ii) and Code section 4975(e)(3)(B) on October 22, 2010, at 75 FR 65263. It subsequently announced its intention to withdraw the proposal and propose a new rule, consistent with the President's Executive Orders 12866 and 13563, in order to give the public a full opportunity to evaluate and comment on the new proposal and updated economic analysis.

[9] *See* NASD Notice to Members 01–23 and FINRA Regulatory Notices 11–02, 12–25 and 12–55.

[10] Although the preamble adopts the phrase ''seller's carve-out'' as a shorthand way of referring

Continued

contains a carve-out from fiduciary status for providers of appraisals, fairness opinions, or statements of value in specified contexts (*e.g.,* with respect to ESOP transactions). The proposal additionally includes a carve-out from fiduciary status for the marketing of investment alternative platforms to plans, certain assistance in selecting investment alternatives and other activities. Finally, the Proposed Regulation carves out the provision of investment education from the definition of an investment advice fiduciary.

Prohibited Transactions

The Department anticipates that the Proposed Regulation will cover many investment professionals who do not currently consider themselves to be fiduciaries under ERISA or the Code. If the Proposed Regulation is adopted, these entities will become subject to the prohibited transaction restrictions in ERISA and the Code that apply specifically to fiduciaries. ERISA section 406(b)(1) and Code section 4975(c)(1)(E) prohibit a fiduciary from dealing with the income or assets of a plan or IRA in his own interest or his own account. ERISA section 406(b)(2) provides that a fiduciary shall not ''in his individual or in any other capacity act in any transaction involving the plan on behalf of a party (or represent a party) whose interests are adverse to the interests of the plan or the interests of its participants or beneficiaries.'' As this provision is not in the Code, it does not apply to transactions involving IRAs. ERISA section 406(b)(3) and Code section 4975(c)(1)(F) prohibit a fiduciary from receiving any consideration for his own personal account from any party dealing with the plan or IRA in connection with a transaction involving assets of the plan or IRA.

Parallel regulations issued by the Departments of Labor and the Treasury explain that these provisions impose on fiduciaries of plans and IRAs a duty not to act on conflicts of interest that may affect the fiduciary's best judgment on behalf of the plan or IRA.[11] The prohibitions extend to a fiduciary causing a plan or IRA to pay an additional fee to such fiduciary, or to a person in which such fiduciary has an interest that may affect the exercise of the fiduciary's best judgment as a fiduciary. Likewise, a fiduciary is prohibited from receiving compensation from third parties in connection with a transaction involving the plan or IRA, or from causing a person in which the fiduciary has an interest which may affect its best judgment as a fiduciary to receive such compensation.[12] Given these prohibitions, conferring fiduciary status on particular investment advice activities can have important implications for many investment professionals.

In particular, investment professionals typically receive compensation for services to retirement investors in the retail market through a variety of arrangements. These include commissions paid by the plan, participant or beneficiary, or IRA, or commissions, sales loads, 12b–1 fees, revenue sharing and other payments from third parties that provide investment products. The investment professional or its affiliate may receive such fees upon the purchase or sale by a plan, participant or beneficiary account, or IRA of the product, or while the plan, participant or beneficiary account, or IRA, holds the product. In the Department's view, receipt by a fiduciary of such payments would violate the prohibited transaction provisions of ERISA section 406(b) and Code section 4975(c)(1)(E) and (F) because the amount of the fiduciary's compensation is affected by the use of its authority in providing investment advice, unless such payments meet the requirements of an exemption.

Prohibited Transaction Exemptions

ERISA and the Code counterbalance the broad proscriptive effect of the prohibited transaction provisions with numerous statutory exemptions. For example, ERISA section 408(b)(14) and Code section 4975(d)(17) specifically exempt transactions in connection with the provision of fiduciary investment advice to a participant or beneficiary of an individual account plan or IRA owner where the advice, resulting transaction, and the adviser's fees meet certain conditions. The Secretary of Labor may grant administrative exemptions under ERISA and the Code on an individual or class basis if the Secretary finds that the exemption is (1) administratively feasible, (2) in the interests of plans and their participants and beneficiaries and IRA owners, and (3) protective of the rights of the participants and beneficiaries of such plans and IRA owners.

Over the years, the Department has granted several conditional administrative class exemptions from the prohibited transactions provisions of ERISA and the Code. The exemptions focus on specific types of compensation arrangements. Fiduciaries relying on these exemptions must comply with certain conditions designed to protect the interests of plans and IRAs. In connection with the development of the Proposed Regulation, the Department has considered comments suggesting the need for additional prohibited transaction exemptions for the wide variety of compensation structures that exist today in the marketplace for investments. Some commentators have suggested that the lack of such relief may cause financial professionals to cut back on the provision of investment advice and the availability of products to plan participants and beneficiaries, IRAs, and smaller plans.

After consideration of the issue, the Department has determined to propose the new class exemption described below, which applies to investment advice fiduciaries providing advice to plan participants and beneficiaries, IRAs, and certain employee benefit plans with fewer than 100 participants (referred to as ''retirement investors''). The exemption would apply broadly to many common types of otherwise prohibited compensation that such investment advice fiduciaries may receive, provided the protective conditions of the exemption are satisfied. The Department is also seeking public comment on whether it should issue a separate streamlined exemption that would allow advisers to receive otherwise prohibited compensation in connection with advice to invest in certain high-quality low-fee investments, subject to fewer conditions.

Elsewhere in this issue of the **Federal Register**, the Department is also proposing a new class exemption for ''principal transactions'' for investment advice fiduciaries selling certain debt securities out of their own inventories to plans and IRAs.

Lastly, the Department is also proposing, elsewhere in this issue of the **Federal Register**, amendments to the following existing class prohibited exemptions, which are particularly relevant to broker-dealers and other investment advice fiduciaries.

to the carve-out and its terms, the regulatory carve-out is not limited to sellers but rather applies more broadly to counterparties in arm's length transactions with plan investors with financial expertise.

[11] Subsequent to the issuance of these regulations, Reorganization Plan No. 4 of 1978, 5 U.S.C. App. (2010), divided rulemaking and interpretive authority between the Secretaries of Labor and the Treasury. The Secretary of Labor was provided interpretive and rulemaking authority regarding the definition of fiduciary in both Title I of ERISA and the Internal Revenue Code.

[12] 29 CFR 2550.408b–2(e); 26 CFR 54.4975–6(a)(5).

Prohibited Transaction Exemption (PTE) 86–128 [13] currently allows an investment advice fiduciary to cause a plan or IRA to pay the investment advice fiduciary or its affiliate a fee for effecting or executing securities transactions as agent. To prevent churning, the exemption does not apply if such transactions are excessive in either amount or frequency. The exemption also allows the investment advice fiduciary to act as the agent for both the plan and the other party to the transaction (*i.e.,* the buyer and the seller of securities), and receive a reasonable fee. To use the exemption, the fiduciary cannot be a plan administrator or employer, unless all profits earned by these parties are returned to the plan. The conditions of the exemption require that a plan fiduciary independent of the investment advice fiduciary receive certain disclosures and authorize the transaction. In addition, the independent fiduciary must receive confirmations and an annual ''portfolio turnover ratio'' demonstrating the amount of turnover in the account during that year. These conditions are not presently applicable to transactions involving IRAs.

The Department is proposing to amend PTE 86–128 to require all fiduciaries relying on the exemption to adhere to the same impartial conduct standards required in the Best Interest Contract Exemption. At the same time, the proposed amendment would eliminate relief for investment advice fiduciaries to IRA owners; instead they would be required to rely on the Best Interest Contract Exemption for an exemption for such compensation. In the Department's view, the provisions in the Best Interest Contract Exemption better address the interests of IRAs with respect to transactions otherwise covered by PTE 86–128 and, unlike plan participants and beneficiaries, there is no separate plan fiduciary in the IRA market to review and authorize the transaction. Investment advice fiduciaries to plans would remain eligible for relief under the exemption, as would investment managers with full investment discretion over the investments of plans and IRA owners, but they would be required to comply with all the protective conditions, described above. Finally, the Department is proposing that PTE 86–128 extend to a new covered transaction, for fiduciaries to sell mutual fund shares out of their own inventory (*i.e.* acting as principals, rather than agents) to plans and IRAs and to receive commissions for doing so. This transaction is currently the subject of another exemption, PTE 75–1, Part II(2) (discussed below) that the Department is proposing to revoke.

Several changes are proposed with respect to PTE 75–1, a multi-part exemption for securities transactions involving broker-dealers and banks, and plans and IRAs.[14] Part I(b) and (c) currently provide relief for certain non-fiduciary services to plans and IRAs. The Department is proposing to revoke these provisions, and require persons seeking to engage in such transactions to rely instead on the existing statutory exemptions provided in ERISA section 408(b)(2) and Code section 4975(d)(2), and the Department's implementing regulations at 29 CFR 2550.408b–2. In the Department's view, the conditions of the statutory exemption are more appropriate for the provision of services.

PTE 75–1, Part II(2), currently provides relief for fiduciaries to receive commissions for selling mutual fund shares to plans and IRAs in a principal transaction. As described above, the Department is proposing to provide relief for these types of transactions in PTE 86–128, and so is proposing to revoke PTE 75–1, Part II(2), in its entirety. As discussed in more detail in the notice of proposed amendment/revocation, the Department believes the conditions of PTE 86–128 are more appropriate for these transactions.

PTE 75–1, Part V, currently permits broker-dealers to extend credit to a plan or IRA in connection with the purchase or sale of securities. The exemption does not permit broker-dealers that are fiduciaries to receive compensation when doing so. The Department is proposing to amend PTE 75–1, Part V, to permit investment advice fiduciaries to receive compensation for lending money or otherwise extending credit to plans and IRAs, but only for the limited purpose of avoiding a failed securities transaction.

PTE 84–24 [15] covers transactions involving mutual fund shares, or insurance or annuity contracts, sold to plans or IRAs by pension consultants, insurance agents, brokers, and mutual fund principal underwriters who are fiduciaries as a result of advice they give in connection with these transactions. The exemption allows these investment advice fiduciaries to receive a sales commission with respect to products purchased by plans or IRAs. The exemption is limited to sales commissions that are reasonable under the circumstances. The investment advice fiduciary must provide disclosure of the amount of the commission and other terms of the transaction to an independent fiduciary of the plan or IRA, and obtain approval for the transaction. To use this exemption, the investment advice fiduciary may not have certain roles with respect to the plan or IRA such as trustee, plan administrator, or fiduciary with written authorization to manage the plan's assets and employers. However it is available to investment advice fiduciaries regardless of whether they expressly acknowledge their fiduciary status or are simply functional or ''inadvertent'' fiduciaries that have not expressly agreed to act as fiduciary advisers, provided there is no written authorization granting them discretion to acquire or dispose of the assets of the plan or IRA.

The Department is proposing to amend PTE 84–24 to require all fiduciaries relying on the exemption to adhere to the same impartial conduct standards required in the Best Interest Contract Exemption. At the same time, the proposed amendment would revoke PTE 84–24 in part so that investment advice fiduciaries to IRA owners would not be able to rely on PTE 84–24 with respect to (1) transactions involving variable annuity contracts and other annuity contracts that constitute securities under federal securities laws, and (2) transactions involving the purchase of mutual fund shares. Investment advice fiduciaries would instead be required to rely on the Best Interest Contract Exemption for compensation received in connection with these transactions. The Department believes that investment advice transactions involving annuity contracts that are treated as securities and transactions involving the purchase of mutual fund shares should occur under the conditions of the Best Interest Contract Exemption due to the similarity of these investments, including their distribution channels and disclosure obligations, to other investments covered in the Best Interest Contract Exemption. Investment advice fiduciaries to ERISA plans would remain eligible for relief under the exemption with respect to transactions involving all insurance and annuity

[13] Class Exemption for Securities Transactions Involving Employee Benefit Plans and Broker-Dealers, 51 FR 41686 (Nov. 18, 1986), amended at 67 FR 64137 (Oct. 17, 2002).

[14] Exemptions from Prohibitions Respecting Certain Classes of Transactions Involving Employee Benefit Plans and Certain Broker-Dealers, Reporting Dealers and Banks, 40 FR 50845 (Oct. 31, 1975), as amended at 71 FR 5883 (Feb. 3, 2006).

[15] Class Exemption for Certain Transactions Involving Insurance Agents and Brokers, Pension Consultants, Insurance Companies, Investment Companies and Investment Company Principal Underwriters, 49 FR 13208 (Apr. 3, 1984), amended at 71 FR 5887 (Feb. 3, 2006).

contracts and mutual fund shares and the receipt of commissions allowable under that exemption. Investment advice fiduciaries to IRAs could still receive commissions for transactions involving non-securities insurance and annuity contracts, but they would be required to comply with all the protective conditions, described above.

Finally, the Department is proposing amendments to certain other existing class exemptions to require adherence to the impartial conduct standards required in the Best Interest Contract Exemption. Specifically, PTEs 75–1, Part III, 75–1, Part IV, 77–4, 80–83, and 83–1, would be amended. Other than the amendments described above, however, the existing class exemptions will remain in place, affording additional flexibility to fiduciaries who currently use the exemptions or who wish to use the exemptions in the future. The Department seeks comment on whether additional exemptions are needed in light of the Proposed Regulation.

Proposed Best Interest Contract Exemption

As noted above, the exemption proposed in this notice provides relief for some of the same compensation payments as the existing exemptions described above. It is intended, however, to flexibly accommodate a wide range of current business practices, while minimizing the harmful impact of conflicts of interest on the quality of advice. The exemption permits fiduciaries to continue to receive a wide variety of types of compensation that would otherwise be prohibited. It seeks to preserve beneficial business models by taking a standards-based approach that will broadly permit firms to continue to rely on common fee practices, as long as they are willing to adhere to basic standards aimed at ensuring that their advice is in the best interest of their customers. This standards-based approach stands in marked contrast to existing class exemptions that generally focus on very specific types of investments or compensation and take a highly prescriptive approach to specifying conditions. The proposed exemption would provide relief for common investments [16] of retirement investors under the umbrella of one exemption. It is intended that this updated approach will ease compliance costs and reduce complexity while promoting the provision of investment advice that is in the best interest of retirement investors.

Section I of the proposed exemption would provide relief for the receipt of prohibited compensation by ''Advisers,'' ''Financial Institutions,'' ''Affiliates'' and ''Related Entities'' for services provided in connection with a purchase, sale or holding of an ''Asset'' [17] by a plan or IRA as a result of the Adviser's advice. The exemption also uses the term ''Retirement Investor'' to describe the types of persons who can be advice recipients under the exemption.[18] These terms are defined in Section VIII of this proposed exemption. The following sections discuss these key definitional terms of the exemption as well as the scope and conditions of the proposed exemption.

Entities Defined

1. Adviser

The proposed exemption contemplates that an individual person, an Adviser, will provide advice to the Retirement Investor. An Adviser must be an investment advice fiduciary of a plan or IRA who is an employee, independent contractor, agent, or registered representative of a ''Financial Institution'' (discussed in the next section), and the Adviser must satisfy the applicable federal and state regulatory and licensing requirements of insurance, banking, and securities laws with respect to the receipt of the compensation.[19] Advisers may be, for example, registered representatives of broker-dealers registered under the Securities Exchange Act of 1934, or insurance agents or brokers.

2. Financial Institutions

For purposes of the proposed exemption, a Financial Institution is the entity that employs an Adviser or otherwise retains the Adviser as an independent contractor, agent or registered representative.[20] Financial Institutions must be registered investment advisers, banks, insurance companies, or registered broker-dealers.

3. Affiliates and Related Entities

Relief is also proposed for the receipt of otherwise prohibited compensation by ''Affiliates'' and ''Related Entities'' with respect to the Adviser or Financial Institution.[21] Affiliates are (i) any person directly or indirectly through one or more intermediaries, controlling, controlled by, or under common control with the Adviser or Financial Institution; (ii) any officer, director, employee, agent, registered representative, relative, member of family, or partner in, the Adviser or Financial Institution; and (iii) any corporation or partnership of which the Adviser or Financial Institution is an officer, director or employee or in which the Adviser or Financial Institution is a partner. For this purpose, ''control'' means the power to exercise a controlling influence over the management or policies of a person other than an individual. Related Entities are entities other than Affiliates in which an Adviser or Financial Institution has an interest that may affect their exercise of their best judgment as fiduciaries.

4. Retirement Investor

The proposed exemption uses the term ''Retirement Investor'' to describe the types of persons who can be investment advice recipients under the exemption. The Retirement Investor may be a plan participant or beneficiary with authority to direct the investment of assets in his or her plan account or to take a distribution; in the case of an IRA, the beneficial owner of the IRA (*i.e.,* the IRA owner); or a plan sponsor (or an employee, officer or director thereof) of a non-participant-directed ERISA plan that has fewer than 100 participants.[22]

Scope of Relief in the Best Interest Contract Exemption

The Best Interest Contract Exemption set forth in Section I would provide prohibited transaction relief for the receipt by Advisers, Financial Institutions, Affiliates and Related Entities of a wide variety of compensation forms as a result of investment advice provided to the Retirement Investors, if the conditions of the exemption are satisfied. Specifically, Section I(b) of the proposed exemption provides that the exemption would permit an Adviser, Financial Institution and their Affiliates and Related Entities to receive compensation for services provided in connection with the purchase, sale or holding of an Asset by a plan, participant or beneficiary account, or IRA, as a result of an Adviser's or

[16] See Section VIII(c) of the proposed exemption, defining the term ''Asset,'' and the preamble discussion in the ''*Scope of Relief in the Best Interest Contract Exemption*'' section below.

[17] See Section VIII(c) of the proposed exemption.

[18] While the Department uses the term ''*Retirement* Investor'' throughout this document, the proposed exemption is not limited only to investment advice fiduciaries of employee pension benefit plans and IRAs. Relief would be available for investment advice fiduciaries of employee welfare benefit plans as well.

[19] See Section VIII(a) of the proposed exemption.

[20] See Section VIII(e) of the proposed exemption.

[21] See Section VIII(b) and (k) of the proposed exemption.

[22] See Section VIII(l) of the proposed exemption.

Financial Institution's investment advice to a Retirement Investor.

The proposed exemption would apply to the restrictions of ERISA section 406(b) and the sanctions imposed by Code section 4975(a) and (b), by reason of Code section 4975(c)(1)(E) and (F). These provisions prohibit conflict of interest transactions and receipt of third-party payments by investment advice fiduciaries.[23] For relief to be available under the exemption, the Adviser and Financial Institution must comply with the applicable conditions, including entering into a contract that acknowledges fiduciary status and requires adherence to certain Impartial Conduct Standards.

The types of compensation payments contemplated by this proposed exemption include commissions paid directly by the plan or IRA, as well as commissions, trailing commissions, sales loads, 12b–1 fees, and revenue sharing payments paid by the investment providers or other third parties to Advisers and Financial Institutions. The exemption also would cover other compensation received by the Adviser, Financial Institution or their Affiliates and Related Entities as a result of an investment by a plan, participant or beneficiary account, or IRA, such as investment management fees or administrative services fees from an investment vehicle in which the plan, participant or beneficiary account, or IRA invests.

As proposed, the exemption is limited to otherwise prohibited compensation generated by investments that are commonly purchased by plans, participant and beneficiary accounts, and IRAs. Accordingly, the exemption defines the ''Assets'' that can be sold under the exemption as bank deposits, CDs, shares or interests in registered investment companies, bank collective funds, insurance company separate accounts, exchange-traded REITs, exchange-traded funds, corporate bonds offered pursuant to a registration statement under the Securities Act of 1933, agency debt securities as defined in FINRA Rule 6710(l) or its successor, U.S. Treasury securities as defined in FINRA Rule 6710(p) or its successor, insurance and annuity contracts (both securities and non-securities), guaranteed investment contracts, and equity securities within the meaning of 17 CFR 230.405 that are exchange-traded securities within the meaning of 17 CFR 242.600. However, the definition does not encompass any equity security that is a security future or a put, call, straddle, or any other option or privilege of buying an equity security from or selling an equity security to another without being bound to do so.[24]

Prohibited compensation received for investments that fall outside the definition of Asset would not be covered by the exemption. Limiting the exemption in this manner ensures that the investments needed to build a basic diversified portfolio are available to plans, participant and beneficiary accounts, and IRAs, while limiting the exemption to those investments that are relatively transparent and liquid, many of which have a ready market price. The Department also notes that many investment types and strategies that would not be covered by the exemption can be obtained through pooled investment funds, such as mutual funds, that are covered by the exemption.

Request for Comment. The Department requests comment on the proposed definition of Assets, in particular:

- Do commenters agree we have identified all common investments of retail investors?
- Have we defined individual investment products with enough precision that parties will know if they are complying with this aspect of the exemption?
- Should additional investments be included in the scope of the exemption? Commenters urging addition of other investment products should fully describe the characteristics and fee structures associated with the products, as well as data supporting their position that the product is a common investment for retail investors.

The Department encourages parties to apply to the Department for individual or class exemptions for types of investments not covered by the exemption to the extent that they believe the proposed package of exemptions does not adequately cover beneficial investment practices for which appropriate protections could be crafted in an exemption.

Limitation to Prohibited Compensation Received As a Result of Advice to Retirement Investors

The Department proposed this exemption to promote the provision of investment advice to retail investors that is in their best interest and untainted by conflicts of interest. The exemption would permit receipt by Advisers and Financial Institutions of otherwise prohibited compensation commonly received in the retail market, such as commissions, 12b–1 fees, and revenue sharing payments, subject to conditions designed specifically to protect the interests of the investors. For consistency with these objectives, the exemption would apply to the receipt of such compensation by Advisers, Financial Institutions and their Affiliates and Related Entities only when advice is provided to retail Retirement Investors, including plan participants and beneficiaries, IRA owners, and plan sponsors (including the sponsor's employees, officers, and directors) acting on behalf of non-participant-directed plans that have fewer than 100 participants. As discussed in the preamble to the Proposed Regulation and in the associated Regulatory Impact Analysis, these investors are particularly vulnerable to abuse. The proposed exemption is designed to protect these investors from the harmful impact of conflicts of interest, while minimizing the potential disruption to a retail market that relies upon many forms of compensation that ERISA would otherwise prohibit.

The Department believes that investment advice in the institutional market is best addressed through other approaches. Accordingly, the proposed exemption does not extend to transactions involving certain larger ERISA plans—those with more than 100 participants. Advice providers to these plans are already accustomed to operating in a fiduciary environment and within the framework of existing prohibited transaction exemptions, which tightly constrain the operation of conflicts of interest. As a result, including large plans within the definition of Retirement Investor could have the undesirable consequence of reducing protections provided under existing law to these investors, without offsetting benefits. In particular, it could have the undesirable effect of increasing the number and impact of conflicts of interest, rather than reducing or mitigating them.

While the Department believes that the Best Interest Contract Exemption is not the appropriate way to address any potential concerns about the impact of the expanded fiduciary definition on large plans, the Department agrees that an adjustment is necessary to accommodate arm's length transactions with plan investors with financial expertise. Accordingly, as part of this regulatory project, the Department has separately proposed a seller's carve-out in the Proposed Conflict of Interest Regulation. Under the terms of that

[23] Relief is also proposed from ERISA section 406(a)(1)(D) and Code section 4975(c)(1)(D), which prohibit transfer of plan assets to, or use of plan assets for the benefit of, a party in interest (including a fiduciary).

[24] See Section VIII(c) of the proposed exemption.

carve-out, persons who provide recommendations to certain ERISA plan investors with financial expertise (but not to plan participants or beneficiaries, or IRA owners) can avoid fiduciary status altogether. The seller's carve-out was developed to avoid the application of fiduciary status to a plan's counterparty in an arm's length commercial transaction in which the plan's representative has no reasonable expectation of impartial advice. When the carve-out's terms are satisfied, it is available for transactions with plans that have more than 100 participants.

The Department recognizes, however, that there are smaller non-participant-directed plans for which the plan sponsor (or an employee, officer or director thereof) is responsible for choosing the specific investments and allocations for their participating employees. The Department believes that these small plan fiduciaries are appropriately categorized with plan participants and beneficiaries and IRA owners, as retail investors. For this reason, the proposed exemption's definition of Retirement Investor includes plan sponsors (or employees, officers and directors thereof) of plans with fewer than 100 participants.[25] As a result, the exemption would extend to advice providers to such smaller plans.

The proposed threshold of fewer than 100 participants is intended to reasonably identify plans that will most benefit from both the flexibility provided by this exemption and the protections embodied in its conditions. The threshold also mirrors the Proposed Regulations' 100-or-more participant threshold for the seller's carve-out. That threshold recognizes the generally greater sophistication possessed by larger plans' discretionary fiduciaries, as well as the greater vulnerability of retail investors, such as small plans. As explained in more detail in the preamble to the Proposed Regulation, investment recommendations to small plans, IRA owners and plan participants and beneficiaries do not fit the ''arms length'' characteristics that the seller's carve-out is designed to preserve. Recommendations to retail investors are routinely presented as advice, consulting, or financial planning services. In the securities markets, brokers' suitability obligations generally require a significant degree of individualization, and research has shown that disclaimers are ineffective in alerting typically unsophisticated investors to the dangers posed by conflicts of interest, and may even exacerbate the dangers. Most retail investors lack financial expertise, are unaware of the magnitude and impact of conflicts of interest, and are unable effectively to assess the quality of the advice they receive.

The 100 or more threshold is also consistent with that applicable for similar purposes under existing rules and practices. The Regulatory Flexibility Act (5 U.S.C. 601 *et seq.*) (RFA) imposes certain requirements with respect to Federal rules that are subject to the notice and comment requirements of section 553(b) of the Administrative Procedure Act (5 U.S.C. 551 *et seq.*) and which are likely to have a significant economic impact on a substantial number of small entities. For purposes of the RFA, the Department considers a small entity to be an employee benefit plan with fewer than 100 participants. The basis of this definition is found in section 104(a)(2) of ERISA that permits the Secretary of Labor to prescribe simplified annual reports for pension plans that cover fewer than 100 participants. Under current Department rules, such small plans generally are eligible for streamlined reporting and relieved of related audit requirements.

The Department invites comment on the proposed exemption's limitation to prohibited compensation received as a result of advice to Retirement Investors. In particular, we ask whether commenters support the limitation as currently formulated, whether the definitions should be revised, or whether there should not be an exclusion with respect to such larger plans at all. Commenters on this subject are also encouraged to address the interaction of the exemption's limitation with the scope of the seller's carve-out in the Proposed Regulation. Finally, we request comment on whether the exemption should be expanded to cover advice to plan sponsors (including the sponsor's employees, officers, and directors) of participant-directed plans with fewer than 100 participants on the composition of the menu of investment options available under such plans, and if so, whether additional or different conditions should apply.

Exclusions in Section I(c) of the Proposed Exemption

Section I(c) of the proposal sets forth additional exclusions from the exemption. Section I(c)(1) provides that the exemption would not apply to the receipt of prohibited compensation from a transaction involving an ERISA plan if the Adviser, Financial Institution or Affiliate is the employer of employees covered by the ERISA plan. The Department believes that due to the special nature of the employer/employee relationship, an exemption permitting an Adviser and Financial Institution to profit from investments by employees in their employer-sponsored plan would not be in the interest of, or protective of, the plans and their participants and beneficiaries. This restriction does not apply, however, in the case of an IRA or other similar plan that is not covered by Title I of ERISA. Accordingly, an Adviser or Financial Institution may provide advice to the beneficial owner of an IRA who is employed by the Adviser, its Financial Institution or an Affiliate, and receive prohibited compensation as a result, provided the IRA is not covered by Title I of ERISA.

Section I(c)(1) further provides that the exemption does not apply if the Adviser or Financial Institution is a named fiduciary or plan administrator, as defined in ERISA section 3(16)(A)) with respect to an ERISA plan, or an affiliate thereof, that was selected to provide advice to the plan by a fiduciary who is not independent of them.[26] This provision is intended to disallow selection of Advisers and Financial Institutions by named fiduciaries or plan administrators that have an interest in them.

Section I(c)(2) provides that the exemption does not extend to prohibited compensation received when the Adviser engages in a principal transaction with the plan, participant or beneficiary account, or IRA.[27] A principal transaction is a transaction in which the Adviser engages in a transaction with the plan, participant or beneficiary account, or IRA, on behalf of the account of the Financial Institution or another person directly or indirectly, through one or more intermediaries, controlling, controlled by, or under common control with the Financial Institution. Principal transactions involve conflicts of interest not addressed by the safeguards of this proposed exemption. Elsewhere in today's **Federal Register**, the Department is proposing an exemption for investment advice fiduciaries to engage in principal transactions involving certain debt securities. The proposed exemption for principal transactions contains conditions

[25] The Department notes that plan participants and beneficiaries in ERISA plans can be Retirement Investors regardless of the number of participants in such plan. Therefore, the 100-participant limitation does not apply when advice is provided directly to the participants and beneficiaries.

[26] See Section VIII(f), defining the term ''Independent.''

[27] For purposes of this proposed exemption, however, the Department does not view a riskless principal transaction involving mutual fund shares as an excluded principal transaction.

specific to those transactions but is designed to align with this proposed exemption so as to ease parties' ability to comply with both exemptions with respect to the same investor.

Section I(c)(3) provides that the exemption would not cover prohibited compensation that is received by an Adviser or Financial Institution as a result of investment advice that is generated solely by an interactive Web site in which computer software-based models or applications provide investment advice to Retirement Investors based on personal information each investor supplies through the Web site without any personal interaction or advice from an individual Adviser. Such computer derived advice is often referred to as ''robo-advice.'' While the Department believes that computer generated advice that is delivered in this manner may be very useful to Retirement Investors, relief will not be included in the proposal. As the marketplace for such advice is still evolving in ways that both appear to avoid conflicts of interest that would violate the prohibited transaction rules, and minimize cost, the Department believes that inclusion of such advice in this exemption could adversely modify the incentives currently shaping the market for robo-advice. Furthermore, a statutory prohibited transaction exemption at ERISA section 408(g) covers computer-generated investment advice and is available for robo-advice involving prohibited transactions if its conditions are satisfied. *See* 29 CFR 2550.408g–1.

Finally, Section I(c)(4) provides that the exemption is limited to Advisers who are fiduciaries by reason of providing investment advice.[28] Advisers who have full investment discretion with respect to plan or IRA assets or who have discretionary authority over the administration of the plan or IRA, for example, are not affected by the Proposed Regulation and are therefore not the subject of this exemption.

Conditions of the Proposed Exemption

Sections II–V of the proposal list the conditions applicable to the Best Interest Contract Exemption described in Section I. All applicable conditions must be satisfied in order to avoid application of the specified prohibited transaction provisions of ERISA and the Code. The Department believes that these conditions are necessary for the Secretary to find that the exemption is administratively feasible, in the interests of plans and of their participants and beneficiaries, and IRA owners and protective of the rights of the participants and beneficiaries of such plans and IRA owners. Under ERISA section 408(a)(2), and Code section 4975(c)(2), the Secretary may not grant an exemption without making such findings. The proposed conditions of the exemption are described below.

Contractual Obligations Applicable to the Best Interest Contract Exemption (Section II)

Section II(a) of the proposal requires that an Adviser and Financial Institution enter into a written contract with the Retirement Investor prior to recommending that the plan, participant or beneficiary account, or IRA, purchase, sell or hold an Asset. The contract must be executed by both the Adviser and the Financial Institution as well as the Retirement Investor. In the case of advice provided to a plan participant or beneficiary in a participant-directed individual account plan, the participant or beneficiary should be the Retirement Investor that is the party to the contract, on behalf of his or her individual account.

The contract may be part of a master agreement with the Retirement Investor and does not require execution prior to each additional recommendation to purchase, sell or hold an Asset. The exemption, in particular the requirement to adhere to a best interest standard, does not mandate an ongoing or long-term advisory relationship, but rather leaves that to the parties. The terms of the contract, along with other representations, agreements, or understandings between the Adviser, Financial Institution and Retirement Investor, will govern whether the nature of the relationship between the parties is ongoing or not.

The contract is the cornerstone of the proposed exemption, and the Department believes that by requiring a contract as a condition of the proposed exemption, it creates a mechanism by which a Retirement Investor can be alerted to the Adviser's and Financial Institution's obligations and be provided with a basis upon which its rights can be enforced. In order to comply with the exemption, the contract must contain every required element set forth in Section II(b)–(e) and also must not include any of the prohibited provisions described in Section II(f). It is intended that the contract creates actionable obligations with respect to both the Impartial Conduct Standards and the warranties, described below. In addition, failure to satisfy the Impartial Conduct Standards will result in loss of the exemption.

It should be noted, however, that compliance with the exemption's conditions is necessary only with respect to transactions that otherwise would constitute prohibited transactions under ERISA and the Code. The exemption does not purport to impose conditions on the management of investments held outside of ERISA-covered plans and IRAs. Accordingly, the contract and its conditions are mandatory only with respect to investments held by plans and IRAs.

1. Fiduciary Status

The proposal sets forth multiple contractual requirements. The first and most fundamental contractual requirement, which is set out in Section II(b) of proposal, is that that both the Adviser and Financial Institution must acknowledge fiduciary status under ERISA or the Code, or both, with respect to any recommendations to the Retirement Investor to purchase, sell or hold an Asset. If this acknowledgment of fiduciary status does not appear in a contract with a Retirement Investor, the exemption is not satisfied with respect to transactions involving that Retirement Investor. This fiduciary acknowledgment is critical to ensuring that there is no uncertainty—before or after investment advice is given with regard to the Asset—that both the Adviser and Financial Institution are acting as fiduciaries under ERISA and the Code with respect to that advice.

The acknowledgment of fiduciary status in the contract is nonetheless limited to the advice to the Retirement Investor to purchase, sell or hold the Asset. The Adviser and Financial Institution do not become fiduciaries with respect to any other conduct by virtue of this contractual requirement.

2. *Standards of Impartial Conduct*

Building upon the required acknowledgment of fiduciary status, the proposal additionally requires that both the Adviser and the Financial Institution contractually commit to adhering to certain specifically delineated Impartial Conduct Standards when providing investment advice to the Retirement Investor regarding Assets, and that they in fact do adhere to such standards. Therefore, if an Adviser and/or Financial Institution fail to comply with the Impartial Conduct Standards, relief under the exemption is no longer available and the contract is violated.

Specifically, Section II(c)(1) of the proposal requires that under the contract the Adviser and Financial Institution provide advice regarding Assets that is in the ''best interest'' of

[28] See also Section VIII(a), defining the term ''Adviser.''

the Retirement Investor. Best interest is defined to mean that the Adviser and Financial Institution act with the care, skill, prudence, and diligence under the circumstances then prevailing that a prudent person would exercise based on the investment objectives, risk tolerance, financial circumstances, and the needs of the Retirement Investor, when providing investment advice to them. Further, under the best interest standard, the Adviser and Financial Institution must act without regard to the financial or other interests of the Adviser, Financial Institution or their Affiliates or any other party. Under this standard, the Adviser and Financial Institution must put the interests of the Retirement Investor ahead of the financial interests of the Adviser, Financial Institution or their Affiliates, Related Entities or any other party.

The best interest standard set forth in this exemption is based on longstanding concepts derived from ERISA and the law of trusts. For example, ERISA section 404 requires a fiduciary to act ''solely in the interest of the participants . . . with the care, skill, prudence, and diligence under the circumstances then prevailing that a prudent man acting in a like capacity and familiar with such matters would use in the conduct of an enterprise of a like character and with like aims.'' Similarly, both ERISA section 404(a)(1)(A) and the trust-law duty of loyalty require fiduciaries to put the interests of trust beneficiaries first, without regard to the fiduciaries' own self-interest. Accordingly, the Department would expect the standard to be interpreted in light of forty years of judicial experience with ERISA's fiduciary standards and hundreds more with the duties imposed on trustees under the common law of trusts. In general, courts focus on the process the fiduciary used to reach its determination or recommendation—whether the fiduciaries, ''at the time they engaged in the challenged transactions, employed the proper procedures to investigate the merits of the investment and to structure the investment.'' *Donovan* v. *Mazzola,* 716 F.2d 1226, 1232 (9th Cir. 1983). Moreover, a fiduciary's investment recommendation is measured based on the circumstances prevailing at the time of the transaction, not on how the investment turned out with the benefit of hindsight.

In this regard, the Department notes that while fiduciaries of plans covered by ERISA are subject to the ERISA section 404 standards of prudence and loyalty, the Code contains no provisions that hold IRA fiduciaries to these standards. However, as a condition of relief under the proposed exemption, both IRA and plan fiduciaries would have to agree to, and uphold, the best interest and Impartial Conduct Standards, as set forth in Section II(c). The best interest standard is defined to effectively mirror the ERISA section 404 duties of prudence and loyalty, as applied in the context of fiduciary investment advice.

In addition to the best interest standard, the exemption imposes other important standards of impartial conduct in Section II(c) of the proposal. Section II(c)(2) requires that the Adviser and Financial Institution agree that they will not recommend an Asset if the total amount of compensation anticipated to be received by the Adviser, Financial Institution, and their Affiliates and Related Entities in connection with the purchase, sale or holding of the Asset by the plan, participant or beneficiary account, or IRA, will exceed reasonable compensation in relation to the total services they provide to the applicable Retirement Investor. The obligation to pay no more than reasonable compensation to service providers is long recognized under ERISA. *See* ERISA section 408(b)(2), 29 CFR 2550.408b–2(a)(3), and 29 CFR 2550.408c–2. The reasonableness of the fees depends on the particular facts and circumstances. Finally, Section II(c)(3) requires that the Adviser's and Financial Institution's statements about Assets, fees, material conflicts of interest, and any other matters relevant to a Retirement Investor's investment decisions, not be misleading.

Under ERISA section 408(a) and Code section 4975(c), the Department cannot grant an exemption unless it first finds that the exemption is administratively feasible, in the interests of plans and their participants and beneficiaries and IRA owners, and protective of the rights of participants and beneficiaries of plans and IRA owners. An exemption permitting transactions that violate the requirements of Section II(c) would be unlikely to meet these standards.

3. Warranty—Compliance With Applicable Law

Section II(d) of the proposal requires that the contract include certain warranties intended to be protective of the rights of Retirement Investors. In particular, to satisfy the exemption, the Adviser, and Financial Institution must warrant that they and their Affiliates will comply with all applicable federal and state laws regarding the rendering of the investment advice, the purchase, sale or holding of the Asset and the payment of compensation related to the purchase, sale and holding. Although this warranty must be included in the contract, the exemption is not conditioned on compliance with the warranty. Accordingly, the failure to comply with applicable federal or state law could result in contractual liability for breach of warranty, but it would not result in loss of the exemption, as long as the breach did not involve a violation of one of the exemption's other conditions (*e.g.,* the best interest standard). De minimis violations of state or federal law would be unlikely to violate the exemption's other conditions, such as the best interest standard, and would not typically result in the loss of the exemption.

4. Warranty—Policies and Procedures

The Financial Institution must also contractually warrant that it has adopted written policies and procedures that are reasonably designed to mitigate the impact of material conflicts of interest that exist with respect to the provision of investment advice to Retirement Investors and ensure that individual Advisers adhere to the Impartial Conduct Standards described above. For purposes of the exemption, a material conflict of interest is deemed to exist when an Adviser or Financial Institution has a financial interest that could affect the exercise of its best judgment as a fiduciary in rendering advice to a Retirement Investor regarding an Asset.[29] Like the warranty on compliance with applicable law, discussed above, this warranty must be in the contract but the exemption is not conditioned on compliance with the warranty. Failure to comply with the warranty could result in contractual liability for breach of warranty.

As part of the contractual warranty on policies and procedures, the Financial Institution must state that in formulating its policies and procedures, it specifically identified material conflicts of interest and adopted measures to prevent those material conflicts of interest from causing violations of the Impartial Conduct Standards. Further, the Financial Institution must state that neither it nor (to the best of its knowledge) its Affiliates or Related Entities will use quotas, appraisals, performance or personnel actions, bonuses, contests, special awards, differentiated compensation or other actions or incentives to the extent they would tend to encourage individual Advisers to make recommendations that are not in the best interest of Retirement Investors.

While these warranties must be part of the contract between the Adviser and

[29] See Section VIII(h) of the proposed exemption.

Financial Institution and the Retirement Investor, the proposal does not mandate the specific content of the policies and procedures. This flexibility is intended to allow Financial Institutions to develop policies and procedures that are effective for their particular business models, within the constraints of their fiduciary obligations and the Impartial Conduct Standards.

Under the proposal, a Financial Institution's policies and procedures must not authorize compensation or incentive systems that would tend to encourage individual Advisers to make recommendations that are not in the best interest of Retirement Investors. Consistent with the general approach in the proposal to the Financial Institution's policies and procedures, however, there are no particular required compensation or employment structures. Certainly, one way for a Financial Institution to comply is to adopt a ''level-fee'' structure, in which compensation for Advisers does not vary based on the particular investment product recommended. But the exemption does not mandate such a structure. The Department believes that the specific implementation of this requirement is best determined by the Financial Institution in light of its particular circumstances and business models.

For further clarification, the Department sets forth the following examples of broad approaches to compensation structures that could help satisfy the contractual warranty regarding the policies and procedures. In connection with all these examples, it is important that the Financial Institution carefully monitor whether the policies and procedures are, in fact, working to prevent the provision of biased advice. The Financial Institution must correct isolated or systemic violations of the Impartial Conduct Standards and reasonably revise policies and procedures when failures are identified.

Example 1: Independently certified computer models.[30] The Adviser provides investment advice that is in accordance with an unbiased computer model created by an independent third party. Under this example, the Adviser can receive any form or amount of compensation so long as the advice is rendered in strict accordance with the model.[31]

Example 2: Asset-based compensation. The Financial Institution pays the Adviser a percentage, which does not vary based on the types of investments, of the dollar amount of assets invested by the plans, participant and beneficiary accounts, and IRAs with the Adviser. Under this example, assume the Financial Institution established the percentage as 0.1% on a quarterly basis. If a plan, participant or beneficiary account, or IRA, invested a total of $10,000 with the Adviser, divided 25% in equity securities, 50% in proprietary mutual funds, and 25% in bonds underwritten by non-Related Entities, and did not withdraw any of the money within the quarter, the Adviser would receive 0.1% of the $10,000.

Example 3: Fee offset. The Financial Institution establishes a fee schedule for its services. It accepts transaction-based payments directly from the plan, participant or beneficiary account, or IRA, and/or from third party investment providers. To the extent the payments from third party investment providers exceed the established fee for a particular service, such amounts are rebated to the plan, participant or beneficiary account, or IRA. To the extent third party payments do not satisfy the established fee, the plan, participant or beneficiary account, or IRA is charged directly for the remaining amount due.[32]

Example 4: Differential Payments Based on Neutral Factors. The Financial Institution establishes payment structures under which transactions involving different investment products result in differential compensation to the Adviser based on a reasonable assessment of the time and expertise necessary to provide prudent advice on the product or other reasonable and objective neutral factors. For example, a Financial Institution could compensate an Adviser differently for advisory work relating to annuities, as opposed to shares in a mutual fund, if it reasonably determined that the time to research and explain the products differed. However, the payment structure must be reasonably designed to avoid incentives to Advisers to recommend investment transactions that are not in Retirement Investors' best interest.

Example 5: Alignment of Interests. The Financial Institution's policies and procedures establish a compensation structure that is reasonably designed to align the interests of the Adviser with the interests of the Retirement Investor. For example, this might include compensation that is primarily asset-based, as discussed in Example 2, with the addition of bonuses and other incentives paid to promote advice that is in the Best Interest of the Retirement Investor. While the compensation would be variable, it would align with the customer's best interest.

These examples are not exhaustive, and many other compensation and employment arrangements may satisfy the contractual warranties. The exemption imposes a broad standard for the warranty and policies and procedures requirement, not an inflexible and highly-prescriptive set of rules. The Financial Institution retains the latitude necessary to design its compensation and employment arrangements, provided that those arrangements promote, rather than undermine, the best interest and Impartial Conduct Standards.

Whether a Financial Institution adopts one of the specific approaches taken in the examples above or a different approach, the Department expects that it will engage in a good faith process to prudently establish and oversee policies and procedures that will effectively mitigate conflicts of interest and ensure adherence to the Impartial Conduct Standards. To this end, Financial Institutions may also want to consider designating an individual or group responsible for addressing material conflicts of interest issues. An internal compliance officer or a committee could monitor adherence to the Impartial Conduct Standards and consider ways to ensure compliance. The individual or group could also develop procedures for reporting material conflicts of interest and for handling external and internal complaints within the Financial Institution, and disciplinary measures for non-compliance with the Impartial Conduct Standards. Additionally, Financial Institutions should consider how best to inform and train individual Advisers on the Impartial Conduct Standards and other requirements of the exemption.

Additionally, Financial Institutions could consider the following components of effective policies and procedures relating to an Adviser's compensation: (i) Avoiding creating compensation thresholds that enable an Adviser to increase his or her

[30] These examples should not be read as retracting views the Department expressed in prior Advisory Opinions regarding how an investment advice fiduciary could avoid prohibited transactions that might result from differential compensation arrangements. Specifically, in Advisory Opinion 2001–09A, the Department concluded that the provision of fiduciary investment advice would not result in prohibited transactions under circumstances where the advice provided by the fiduciary with respect to investment funds that pay additional fees to the fiduciary is the result of the application of methodologies developed, maintained and overseen by a party independent of the fiduciary in accordance with the conditions set forth in the Advisory Opinion. A computer model also can be used as part of an advice arrangement that satisfies the conditions under the prohibited transaction exemption in ERISA section 408(b)(14) and (g), described above.

[31] As previously noted, this exemption is not available for advice generated solely by a computer model and provided to the Retirement Investor electronically without live advice. Nevertheless, this exemption remains available in the hypothetical because the advice is delivered by a live Adviser.

[32] *See* footnote 31 *supra.* Certain types of fee-offset arrangements may result in avoidance of prohibited transactions altogether. In Advisory Opinion Nos. 97–15A and 2005–10A, the Department explained that a fiduciary investment adviser could provide investment advice to a plan with respect to investment funds that pay it or an affiliate additional fees without engaging in a prohibited transaction if those fees are offset against fees that the plan otherwise is obligated to pay to the fiduciary.

compensation disproportionately through an incremental increase in sales; (ii) monitoring activity of Advisers approaching compensation thresholds such as higher payout percentages, back-end bonuses, or participation in a recognition club, such as a President's Club; (iii) maintaining neutral compensation grids that pay the Adviser a flat payout percentage regardless of product type sold (so long as they do not merely transmit the Financial Institution's conflicts to the Adviser); (iv) refraining from providing higher compensation or other rewards for the sale of proprietary products or products for which the firm has entered into revenue sharing arrangements; (v) stringently monitoring recommendations around key liquidity events in the investor's lifecycle where the recommendation is particularly significant (*e.g.* when an investor rolls over his pension or 401(k) account); and (vi) developing metrics for good and bad behavior (red flag processes) and using clawbacks of deferred compensation to adjust compensation for employees who do not properly manage conflicts of interest.[33]

The Department seeks comments on all aspects of its discussion of the sorts of policies and procedures that will satisfy the required contractual warranties of Section II(d)(2)–(4). In particular, the Department requests comments on whether the exemption should be more prescriptive about the terms of policies and procedures, or provide more detailed examples of acceptable policies and procedures. In addition, the Department requests comments on whether commenters believe the examples describe policies and procedures that would achieve the investor-protective objectives of the exemption.

5. Contractual Disclosures

Finally, Section II(e) of the proposal requires certain disclosures in the written contract. If the disclosures do not appear in a contract with a Retirement Investor, the exemption is not satisfied with respect to transactions involving that Retirement Investor. First, Section II(e)(1) provides that the Financial Institution and the Adviser must identify in the written contract any material conflicts of interest. This disclosure may be a general description of the types of material conflicts of interest applicable to the Financial Institution and Adviser, provided the disclosure also informs the Retirement Investor that a more specific description that is kept current is available on the Financial Institution's Web site (web address provided) and by mail, upon request of the Retirement Investor.

Second, Section II(e)(2) requires that the written contract must inform the Retirement Investor of the right to obtain complete information about all of the fees currently associated with the Assets in which it is invested, including all of the fees payable to the Adviser, Financial Institution, and any Affiliates and Related Entities in connection with such investments. The fee information must be complete, and it must include both the direct and the indirect fees paid by the plan or IRA.[34] Section II(e)(3) provides that the written contract also must disclose to the Retirement Investor whether the Financial Institution offers proprietary products or receives third party payments with respect to the purchase, sale or holding of any Asset. Third party payments, for purposes of this exemption, are defined as sales charges (when not paid directly by the plan, participant or beneficiary account, or IRA), 12b–1 fees, and other payments paid to the Adviser, Financial Institution or any Affiliate or Related Entity by a third party as a result of the purchase, sale or holding of an Asset by a plan, participant or beneficiary account, or IRA. A proprietary product is defined for purposes of this exemption as a product that is managed by the Financial Institution or any of its Affiliates. In conjunction with this disclosure, the contract must provide the address of a Web page that discloses the compensation arrangements entered into by the Adviser and the Financial Institution, as required by Section III(c) of the proposal and discussed below.

Enforcement of the Contractual Obligations

The contractual requirements set forth in Section II of the proposal are enforceable. Plans, plan participants and beneficiaries, IRA owners, and the Department may use the contract as a tool to ensure compliance with the exemption. The Department notes, however, that this contractual tool creates different rights with respect to plans, participants and beneficiaries, IRA owners and the Department.

1. IRA Owners

The contract between the IRA owner and the Adviser and Financial Institution forms the basis of the IRA owner's enforcement rights. As outlined above, the contract embodies obligations on the part of the Adviser and Financial Institution. The Department intends that all the contractual obligations (the Impartial Conduct Standards and the warranties) will be actionable by IRA owners. The most important of these contractual obligations for enforcement purposes is the obligation imposed on both the Adviser and the Financial Institution to comply with the Impartial Conduct Standards. Because these standards are contractually imposed, the IRA owner has a contract claim if, for example, the Adviser recommends an investment product that is not in the best interest of the IRA owner.

2. Plans, Plan Participants and Beneficiaries

The protections of the exemption and contractual terms will also be enforceable by plans, plan participants and beneficiaries. Specifically, if an Adviser or Financial Institution received compensation in a prohibited transaction but failed to satisfy any of the Impartial Conduct Standards or any other condition of the exemption, the Adviser and Financial Institution would be unable to qualify for relief under the exemption, and, as a result, could be liable under ERISA section 502(a)(2) and (3). An Adviser's failure to comply with the exemption or the Impartial Conduct Standards would result in a non-exempt prohibited transaction and would likely constitute a fiduciary breach. As a result, a plan, plan participant or beneficiary would be able to sue under ERISA section 502(a)(2) or (3) to recover any loss in value to the plan (including the loss in value to an individual account), or to obtain disgorgement of any wrongful profits or unjust enrichment. Additionally, plans, participants and beneficiaries could enforce their obligations in an action based on breach of the agreement.

3. The Department

In addition, the Department would be able to enforce ERISA's prohibited transaction and fiduciary duty provisions with respect to employee benefit plans, but not IRAs, in the event that the Adviser or Financial Institution received compensation in a prohibited transaction but failed to comply with the exemption or the Impartial Conduct Standards. If, for example, any of the

[33] *See* FINRA Report on Conflicts of Interest, October 2013.

[34] To the extent compliance with this information request requires Advisers and Financial Institutions to obtain such information from entities that are not closely affiliated with them, the Adviser or Financial Institution may supply such information to the Retirement Investor in compliance with the exemption provided the Adviser and Financial Institution act in good faith and do not know that the materials are incomplete or inaccurate. For purposes of the proposed exemption, Affiliates within the meaning of Section VIII(b)(1) and (2) are considered closely affiliated such that the good faith reliance would not apply.

specific conditions of the exemption are not met, the Adviser and Financial Institution will have engaged in a non-exempt prohibited transaction, and the Department will be entitled to seek relief under ERISA section 502(a)(2) and (5).

4. Excise Taxes Under the Code

In addition to the claims described above that may be brought by IRA owners, plans, plan participants and beneficiaries, and the Department, to enforce the contract and ERISA, Advisers and Financial Institutions that engage in prohibited transactions under the Code are subject to an excise tax. The excise tax is generally equal to 15% of the amount involved. Parties who have participated in a prohibited transaction for which an exemption is not available must pay the excise tax and file Form 5330 with the Internal Revenue Service.

Prohibited Provisions

Finally, in order to preserve these various enforcement rights, Section II(f) of the proposal provides that certain provisions may not be part of the contract. If these provisions appear in a contract with a Retirement Investor, the exemption is not satisfied with respect to transactions involving that Retirement Investor. First, the proposal requires that the contract may not contain exculpatory provisions that disclaim or otherwise limit liability for an Adviser's or Financial Institution's violations of the contract's terms. Second, the contract may not require the Retirement Investor to agree to waive or qualify its right to bring or participate in a class action or other representative action in court in a contract dispute with the Adviser or Financial Institution. The right of a Retirement Investor to bring a class-action claim in court (and the corresponding limitation on fiduciaries' ability to mandate class-action arbitration) is consistent with FINRA's position that its arbitral forum is not the correct venue for class-action claims. As proposed, this section would not affect the ability of a Financial Institution or Adviser, and a Retirement Investor, to enter into a pre-dispute binding arbitration agreement with respect to individual contract claims. The Department expects that most individual arbitration claims under this exemption will be subject to FINRA's arbitration procedures and consumer protections. The Department seeks comments on whether there are certain procedures and/or consumer protections that it should adopt or mandate for those disputes not covered by FINRA.

Disclosure Requirements for Best Interest Contract Exemption (Section III)

In order to facilitate access to information on Financial Institution and Adviser compensation, the proposal requires both public disclosure and disclosure to Retirement Investors.

1. Web Page

Section III(c) of the proposal requires that the Financial Institution maintain a public Web page that provides several different types of information. The Web page must show the direct and indirect material compensation payable to the Adviser, Financial Institution and any Affiliate for services provided in connection with each Asset (or, if uniform across a class of Assets, the class of Assets) that a plan, participant or beneficiary account, or an IRA, is able to purchase, hold, or sell through the Adviser or Financial Institution, and that a plan, participant or beneficiary account, or an IRA has purchased, held, or sold within the last 365 days, the source of the compensation, and how the compensation varies within and among Asset classes. The Web page must be updated at reasonable intervals, not less than quarterly. The compensation may be expressed as a monetary amount, formula or percentage of the assets involved in the purchase, sale or holding.

The information provided by the Web page will provide a broad base of information about the various pricing and compensation structures adopted by Financial Institutions and Advisers. The Department believes that the data provided on the Web page will provide information that can be used by financial information companies to analyze and provide information comparing the practices of different Advisers and Financial Institutions. Such information will allow a Retirement Investor to evaluate costs and Advisers' and Financial Institutions' compensation practices.

The Web page information must be provided in a manner that is easily accessible to a Retirement Investor and the general public. Appendix I to this notice is an exemplar of a possible web disclosure. In addition, the Web page must also contain a version of the same information that is formatted in a machine-readable manner. The Department recognizes that machine readable data can be formatted in many ways. Therefore, the Department requests comment on the format and data fields that should be required under such a condition.

2. Individual Transactional Disclosure

In Section III(a), the exemption requires point of sale disclosure to the Retirement Investor, prior to the execution of the investment transaction, regarding the all-in cost and anticipated future costs of recommended Assets. The disclosure is designed to make as clear and salient as possible the total cost that the plan, participant or beneficiary account, or IRA will incur when following the Adviser's recommendation, and to provide cost information that can be compared across different Assets that are recommended for investment. In addition, the projection of the costs over various holding periods would inform the Retirement Investor of the cumulative impact of the costs over time and of potential costs when the investment is sold.

As proposed, the disclosure requirement of Section III(a) would be provided in a summary chart designed to direct the Retirement Investor's attention to a few important data points regarding fees, in a time frame that would enable the Retirement Investor to discuss other (possibly less costly) alternatives with the Adviser prior to executing the transaction. The disclosure chart does not have to be provided again with respect to a subsequent recommendation to purchase the same investment product, so long as the chart was previously provided to the Retirement Investor within the past 12 months and the total cost has not materially changed.

To the extent compliance with the point of sale disclosure requires Advisers and Financial Institutions to obtain cost information from entities that are not closely affiliated with them, they may rely in good faith on information and assurances from the other entities, as long as they do not know that the materials are incomplete or inaccurate. This good faith reliance applies unless the entity providing the information to the Adviser and Financial Institution is (1) a person directly or indirectly through one or more intermediaries, controlling, controlled by, or under common control with the Adviser or Financial Institution; or (2) any officer, director, employee, agent, registered representative, relative (as defined in ERISA section 3(15)), member of family (as defined in Code section 4975(e)(6)) of, or partner in, the Adviser or Financial Institution.[35]

The required chart would disclose with respect to each Asset

[35] See proposed definition of Affiliate, Section VIII(b)(1) and (b)(2).

recommended, the ''total cost'' to the plan, participant or beneficiary account, or IRA, of the investment for 1-, 5- and 10-year periods expressed as a dollar amount, assuming an investment of the dollar amount recommended by the Adviser, and reasonable assumptions about investment performance, which must be disclosed.

As defined in the proposal, the ''total cost'' of investing in an asset means the sum of the following, as applicable: Acquisition costs, ongoing costs, disposition costs, and any other costs that reduce the asset's rate of return, are paid by direct charge to the plan, participant or beneficiary account, or IRA, or reduce the amounts received by the plan, participant or beneficiary account, or IRA (*e.g.,* contingent fees, such as back-end loads, including those that phase out over time, with such terms explained beneath the table). The terms ''acquisition costs,'' ''ongoing costs,'' and ''disposition costs,'' are defined in the proposal. Appendix II to this proposal contains a model chart that may be used to provide the information required under this section. Use of the model chart is not mandatory. However, use of an appropriately completed model chart will be deemed to satisfy the requirement of Section III(a).

Request for comment. The Department requests comment on the design of this proposed point of sale disclosure, as well as issues related to the ability of the Adviser to provide the disclosure and whether it will provide information that is meaningful to Retirement Investors. In general, commenters are asked to address the anticipated cost of compliance with the point of sale disclosure and whether the disclosure as we have described it will provide information that is more useful to Retirement Investors than other similar disclosures that are required under existing law. As discussed below in more detail, the Department requests comment on whether the disclosure can be designed to provide information that would result in a useful comparison among Assets; whether it is feasible for Advisers and Financial Institutions to obtain reliable information to complete the chart at the time it would be required to be provided to the Retirement Investor; and whether the disclosure, without information on other characteristics of the investment, would improve Retirement Investors' ability to make informed investment decisions.

Design. As explained above, the proposal contemplates a chart with the following information: All-in cost of the Asset, and the cost if held for 1-, 5-, and 10 years. The all-in cost would be calculated with the following components: ''acquisition costs,'' ''ongoing costs,'' ''disposition costs,'' and ''other.'' The Department seeks comment on all aspects of this approach. In particular, we ask:

- Are the all-in costs of the investments permitted under the proposal capable of being reflected accurately in the chart?
- Are all-in costs already reflected in the summary prospectuses for certain investments?
- Have we correctly identified the possible various costs associated with the permitted investments?
- Should the point of sale disclosure requirement be limited to certain events, such as opening a new account or rolling over existing investments? If so, what changes would be needed to the model chart?
- Are our proposed definitions of the various costs clear enough to result in information that is reasonably comparable across different Financial Institutions?
- Is it possible to attribute all the costs to the account of a particular plan, participant or beneficiary, or IRA?
- How should long-term costs be measured?

Feasibility. The point of sale disclosure is proposed to be an individualized disclosure provided prior to the execution of the transaction. The Department seeks comment on whether there are practical impediments to the creation and disclosure of the chart in the time frame proposed. Therefore, we ask:

- Will Advisers and Financial Institutions have access to the information required to be disclosed in the chart?
- Are there existing systems at Financial Institutions that could produce the disclosure required in this proposal? If not, what is the cost of developing a system to comply?
- What are the costs associated with providing the disclosure?
- Would the costs be reduced if the Adviser and Financial Institution could provide the disclosure for full portfolios of investments, rather than for each investment recommendation separately?
- Would the costs be reduced if the timing of the disclosure was more closely aligned with the SEC's disclosure requirements applicable to broker-dealers (*i.e.* at or before the completion of the transaction), rather than point of sale?
- Are there particular asset classes for which this kind of point of sale disclosure is more feasible or less feasible? What share of assets held by Retirement Investors or share of transactions executed by Advisers and Financial Institutions fall within the asset classes for which the point of sale disclosure is more feasible and less feasible?
- Are there particular asset classes for which all the information that would be required to be disclosed in the chart is currently required in a similar format under existing law?
- Would the required disclosure be more feasible or less costly if a narrative statement were required instead of a summary chart?

Impact. The point of sale disclosure would be intended to inform the Retirement Investor of the costs associated with the investment. Would such a disclosure in this simple format provide information that is meaningful and likely to improve a Retirement Investor's decision making? We ask for input on the following:

- Would the simplified format result in the communication of information that is accurate, and contribute to informed investment decisions?
- Do commenters recommend an alternative format or alternative disclosures?
- Would the relative fees associated with different types of investment products, without a required disclosure of the relative risks of the product (*i.e.,* mutual fund ongoing fees versus a one-time brokerage commission for a stock transaction) contribute to informed investment decisions?
- In the absence of a required benchmark, is the disclosure of the all-in fees of a particular investment helpful to the Retirement Investor? If not, how could a benchmark be crafted for the various Assets permitted to be sold under the proposal?

Alternative. Instead of the point of sale disclosure as proposed, would a ''cigarette warning''-style disclosure be as effective and less costly? For example, the disclosure could read:

Investors are urged to check loads, management fees, revenue-sharing, commissions, and other charges before investing in any financial product. These fees may significantly reduce the amount you are able to invest over time and may also determine your adviser's take-home pay. If these fees are not reported in marketing materials or made apparent by your investment adviser, do not forget to ask about them.

3. Individual Annual Disclosure

Section III(b) of the proposal requires individual disclosure in the form of an annual disclosure. Specifically, the proposal requires the Adviser or Financial Institution to provide each

Retirement Investor with an annual written disclosure within 45 days of the end of the applicable year. The annual disclosure must include: (i) A list identifying each Asset purchased or sold during the applicable period and the price at which the Asset was purchased or sold; (ii) a statement of the total dollar amount of all fees and expenses paid by the plan, participant or beneficiary account, or IRA, both directly and indirectly, with respect to each Asset purchased, held or sold during the applicable period; and (iii) a statement of the total dollar amount of all compensation received by the Adviser and Financial Institution, directly or indirectly, from any party, as a result of each Asset sold, purchased or held by the plan, participant or beneficiary account, or IRA, during the applicable period. This disclosure is intended to show the Retirement Investor the impact of the cost of the Adviser's advice on the investments by the plan, participant or beneficiary account, or IRA.

The Department requests comment on this disclosure, in light of the potential point of sale disclosure. We are particularly interested in comments discussing whether both disclosures would be helpful and, if not, which would be more useful to Retirement Investors?

4. Non-Security Insurance and Annuity Contracts.

Section III(a) and (b) will apply to all Assets as defined in the proposal. This includes insurance and annuity contracts that are securities under federal securities law, such as variable annuities, and insurance and annuity contracts that are not, such as fixed annuities. The Department requests comment on whether the types of information required in the Section III(a) and (b) disclosures are applicable and available with respect to insurance and annuity contracts that are not securities.

In this regard, we note that PTE 84–24 [36] is an existing exemption under which certain investment advice fiduciaries can receive commissions on insurance and annuity contracts and mutual fund shares that are purchased by plans and IRAs. Elsewhere in this issue of the **Federal Register**, the Department has proposed to revoke relief under PTE 84–24 as it applies to IRA transactions involving annuity contracts that are securities (including variable annuity contracts) and mutual fund shares. The fact that IRA owners generally do not benefit from the protections afforded by the fiduciary duties owed by plan sponsors to their employee benefit plans makes it critical that their interests are protected by appropriate conditions in the Department exemptions. In our view, this proposed Best Interest Contract Exemption contains conditions that are uniquely protective of IRA owners.

The Department has determined however that PTE 84–24 should remain available for investment advice fiduciaries to receive commissions for IRA (and plan) purchases of insurance and annuity contracts that are not securities. This distinction is due in part to uncertainty as to whether the disclosure requirements proposed herein are readily applicable to insurance and annuity contracts that are not securities, and whether the distribution methods and channels of insurance products that are not securities fit within this exemption's framework.

The Department requests comment on this approach. In particular, we ask whether we have drawn the correct lines between insurance and annuity products that are securities and those that are not, in terms of our decision to continue to allow IRA transactions involving non-security insurance and annuity contracts to occur under the conditions of PTE 84–24 while requiring IRA transactions involving securities to occur under the conditions of this proposed Best Interest Contract Exemption.

In order for us to evaluate our approach, we request public comment the current disclosure requirements applicable to insurance and annuity contracts that are not securities. Can Section III(a) and (b) can be revised with respect to such non-securities insurance and annuity contracts to provide meaningful information to investors as to the costs of such investments and the overall compensation received by Advisers and Financial Institutions in connection with the transactions? In addition, the Department requests information on the distribution methods and channels applicable to insurance and annuity products that are not securities. What are common structures of insurance agencies?

Finally, we request public input as to whether any conditions of this proposed Best Interest Contract Exemption, other than the disclosure conditions discussed above, would be inapplicable to non-security insurance and annuity products? Are any aspects of this exemption particularly difficult for insurance companies to comply with?

Range of Investment Options (Section IV)

Section IV(a) of the proposal requires a Financial Institution to offer for purchase, sale, or holding and the Adviser to make available to the plan, participant or beneficiary account, or IRA, for purchase, sale or holding a broad range of investment options. These investment options should enable an Adviser to make recommendations to the Retirement Investor with respect to all of the asset classes reasonably necessary to serve the best interests of the Retirement Investor in light of the Retirement Investor's objectives, risk tolerance and specific financial circumstances. The Department believes that ensuring that an Adviser has a wide range of investment options at his or her disposal is the most likely method by which a Retirement Investor can be assured of developing a balanced investment portfolio.

The Department recognizes, however, that some Financial Institutions limit the investment products that a Retirement Investor may purchase, sell or hold based on whether the products generate third-party payments or are proprietary products, or for other reasons (*e.g.,* the firms specialize in particular asset classes or product types). Both Financial Institutions and Advisers often rely on the ability to sell proprietary products or the ability to generate additional revenue through third-party payments to support their business models. The proposal permits Financial Institutions with such business models to rely on the exemption provided additional conditions are satisfied.

The additional conditions are set forth in Section IV(b) of the proposal. First, before limiting the investment products a Retirement Investor may purchase, sell or hold, the Financial Institution must make a specific written finding that the limitations do not prevent the Adviser from providing advice that is in the best interest of the Retirement Investors (*i.e.,* advice that reflects the care, skill, prudence, and diligence under the circumstances then prevailing that a prudent person would exercise based on the investment objectives, risk tolerance, financial circumstances, and needs of the Retirement Investor, without regard to the financial or other interests of the Adviser, Financial Institution or any Affiliate, Related Entity, or other party) or from otherwise adhering to the Impartial Conduct Standards.

[36] Class Exemption for Certain Transactions Involving Insurance Agents and Brokers, Pension Consultants, Insurance Companies, Investment Companies and Investment Company Principal Underwriters, 49 FR 13208 (Apr. 3, 1984), amended at 71 FR 5887 (Feb. 3, 2006).

Second, the proposal provides that the payments received in connection with these limited menus be reasonable in relation to the value of specific services provided to Retirement Investors in exchange for the payments and not in excess of the services' fair market value. This is more specific than the reasonable compensation requirement set forth in the contract under Section II because of the limitation placed by the Financial Institution on the investments available for Adviser recommendation. The Department intends to ensure that such additional payments received in connection with the advice are for specific services to Retirement Investors.

The proposal additionally provides that the Financial Institution or Adviser, before giving any recommendations to a Retirement Investor, must give clear written notice to the Retirement Investor of any limitations placed by the Financial Institution on the investment products offered by the Adviser. In this regard, it is insufficient for the notice merely to state that the Financial Institution ''may'' limit investment recommendations, without specifically disclosing the extent to which the Financial Institution in fact does so.

Finally, the proposal would require an Adviser or Financial Institution to notify the Retirement Investor if the Adviser does not recommend a sufficiently broad range of investment options to meet the Retirement Investor's needs. For example, the Department envisions the provision of such a notice when the Adviser and Financial Institution provide advice with respect to a limited class of investment products, but those products do not meet a particular investor's needs. The Department requests comment on whether it is possible to state this standard with more specificity, or whether more detailed guidance is needed for parties to determine when compliance with the condition would be necessary. The Department also requests comment on whether any specific disclosure is necessary to inform the Retirement Investor about the particular conflicts of interest associated with Advisers that recommend only proprietary products, and, if so, what the disclosure should say.

The conditions of Section IV do not apply to an Adviser or Financial Institution with respect to the provision of investment advice to a participant or beneficiary of a participant directed individual account plan concerning the participant's or beneficiary's selection of designated investment options available under the plan, provided the Adviser and Financial Institution did not provide advice to the responsible plan fiduciary regarding the menu of designated investment options. In such circumstances, the Adviser and Financial Institution are not responsible for the limitations on the investment options.

EBSA Disclosure and Recordkeeping (Section V)

1. Notification to the Department of Reliance on the Exemption

Before receiving prohibited compensation in reliance on Section I of this exemption, Section V(a) of the proposal requires that the Financial Institution notify the Employee Benefits Security Administration of the intention to rely on this exemption. The notice need not identify any specific plan or IRA. The notice will remain in effect until it is revoked in writing. The Department envisions accepting the notice via email and regular mail.

This is a notice provision only and does not require any approval or finding by the Department that the Financial Institution is eligible for the exemption. Once a Financial Institution has sent the notice, it can immediately begin to rely on the exemption provided the conditions are satisfied.

2. Data Request

Section V(b) of the proposed exemption also would require Financial Institutions to maintain certain data, which is specified in Section IX, for six years from the date of the applicable transaction. The data request would require Financial Institutions to maintain and disclose to the Department upon request specific information regarding purchases, sales, and holdings by Retirement Investors made pursuant to advice provided by Advisers and Financial Institutions relying on the proposed exemption. Financial Institutions may maintain this information in any form that may be readily analyzed by the Department or simply as raw data. Receipt of this additional data will assist the Department in assessing the effectiveness of the exemption.

No party, other than the Financial Institution responsible for compliance, will be subject to the taxes imposed by Code section 4975(a) and (b), if applicable, if the Financial Institution fails to maintain the data or the data are not available for examination.

Request for Comment. The proposed data request covers certain information with respect to investment inflows, outflows and holdings, and returns, by plans, participant and beneficiary accounts, and IRAs and is intended to assist the Department in evaluating the effectiveness of the exemption. We request comment on whether these are the appropriate data points for the covered Assets. Are the terms used clear enough to result in information that is reasonably comparable across different Financial Institutions? Or should we include precise definitions of inflows, outflows, holdings, returns, etc.? If so, please suggest specifically how these terms should be defined. Are different terms needed to request comparable information regarding insurance and annuity contracts that are not securities?

3. General Recordkeeping

Finally, Section V(c) and (d) of the proposal contains a general recordkeeping requirement applicable to the Financial Institution. The general recordkeeping requirement relates to the records necessary for the Department and certain other entities to determine whether the conditions of this exemption have been satisfied.

Effect of Failure To Comply With Conditions

If the exemption is granted, relief under the Best Interest Contract Exemption will be available only if all applicable conditions described above are satisfied. Satisfaction of the conditions is determined on a transaction by transaction basis, however. Thus, the effect of noncompliance with a condition depends on whether the condition applies to a single transaction or multiple transactions. For example, if an Adviser fails to provide a transaction disclosure in accordance with Section III(a) with respect to an Asset purchased by a plan, participant or beneficiary account, or an IRA, the relief provided by the Best Interest Contract Exemption would be unavailable to the Adviser and Financial Institution only for the otherwise prohibited compensation received in connection with the investment in that specific Asset by the plan, participant or beneficiary account, or IRA. More broadly, if an Adviser and Financial Institution fail to enter into a contract with a Retirement Investor in accordance with Section II, relief under the Best Interest Contract Exemption would be unavailable solely with respect to the investments by that Retirement Investor, not all Retirement Investors to which the Adviser and Financial Institution provide advice. However, if a Financial Institution fails to comply with a condition that is necessary for all transactions involving investment advice to Retirement

Investors, such as the maintenance of the Web page required by Section III(c), the Financial Institution will not be eligible for the relief under the Best Interest Contract Exemption for all prohibited transactions entered into during the period in which the failure to comply existed.

Supplemental Exemptions

1. Proposed Insurance and Annuity Exemption (Section VI)

The Best Interest Contract Exemption, as set forth above, permits Advisers and Financial Institutions to receive compensation that would otherwise be prohibited by the self-dealing and conflicts of interest provisions of ERISA and the Code. ERISA and the Code contain additional prohibitions on certain specific transactions between plans and IRAs and ''parties in interest'' and ''disqualified persons,'' including service providers. These additional prohibited transactions include: (i) The purchase or sale of an asset between a plan/IRA and a party in interest/disqualified person, and (ii) the transfer of plan/IRA assets to a party in interest/disqualified person. These prohibited transactions are subject to excise tax and personal liability for the fiduciary.

A plan's or IRA's purchase of an insurance or annuity product would be a prohibited transaction if the insurance company has a pre-existing relationship with the plan/IRA as a service provider, or is otherwise a party in interest/disqualified person. In the Department's view, this circumstance is common enough in connection with recommendations by Advisers and Financial Institutions to warrant proposal of an exemption for these types of transactions in conjunction with the Best Interest Contract Exemption. The Department anticipates that the fiduciary that causes a plan's or IRA's purchase of an insurance or annuity product would not be the Adviser or Financial Institution but would instead be another fiduciary, such as a plan sponsor or IRA owner, acting on the Adviser's or Financial Institution's advice. Because the party requiring relief for this prohibited transaction is separate and independent of the Adviser and Financial Institution, the Department is proposing this exemption subject to discrete conditions described below.

Although there is an existing exemption which would often cover these transactions, PTE 84–24, the Department is proposing elsewhere in this issue of the **Federal Register** to revoke that exemption to the extent it provides relief for transactions involving IRAs' purchase of variable annuity contracts and other annuity contracts that are securities under federal securities law. We have therefore decided to provide an exemption for these transactions as part of this document, both to ensure that relief is available for transactions involving IRAs but also for ease of compliance for transactions involving other Retirement Investors (*i.e.,* plan participants, beneficiaries and small plan sponsors).

As with the Best Interest Contract Exemption, relief under the proposed insurance and annuity exemption in Section VI would not extend to a plan covered by Title I of ERISA where (i) the Adviser, Financial Institution or any Affiliate is the employer of employees covered by the plan, or (ii) the Adviser or Financial Institution is a named fiduciary or plan administrator (as defined in ERISA section 3(16)(A)) with respect to the plan, or an affiliate thereof, that has not been selected by a fiduciary that is Independent. The conditions proposed for the insurance and annuity exemption are that the transaction must be effected by the insurance company in the ordinary course of its business as an insurance company, the combined total of all fees and compensation received by the insurance company is not in excess of reasonable compensation under the circumstances, the purchase is for cash only, and that the terms of the purchase are at least as favorable to the plan as the terms generally available in an arm's length transaction with an unrelated party.[37]

2. Exemption for Pre-Existing Transactions (Section VII)

Section VII of the proposal would provide an exemption for Advisers, Financial Institutions, and their Affiliates and Related Entities in connection with transactions that occurred prior to the applicability date of the Proposed Regulation, if adopted. Specifically, the exemption would provide relief from ERISA sections 406(a)(1)(D) and 406(b) for the receipt of prohibited compensation, after the applicability date of the regulation, by an Adviser, Financial Institution and any Affiliate or Related Entity for services provided in connection with the purchase, sale or holding of an Asset before the applicability date. The Department is proposing this exemption to provide relief for investment professionals that may have provided advice prior to the applicability date of the regulation but did not consider themselves fiduciaries. Their receipt after the applicability date of ongoing periodic payments of compensation attributable to a purchase, sale or holding of an Asset by a plan, participant or beneficiary account, or IRA, prior to the applicability date of the regulation might otherwise raise prohibited transaction concerns.

The Department is also proposing this exemption for Advisers and Financial Institutions who were considered fiduciaries before the applicability date, but who entered into transactions involving plans and IRAs before the applicability date in accordance with the terms of a prohibited transaction exemption that has since been amended. Section VII would permit Advisers, Financial Institutions, and their Affiliates and Related Entities, to receive compensation such as 12b–1 fees, after the applicability date, that is attributable to a purchase, sale or holding of an Asset by a plan, participant or beneficiary account, or an IRA, that occurred prior to the applicability date.

In order to take advantage of this relief, the exemption would require that the compensation must be received pursuant to an agreement, arrangement or understanding that was entered into prior to the applicability date of the regulation, and that the Adviser and Financial Institution not provide additional advice to the plan or IRA, regarding the purchase, sale or holding of the Asset after the applicability date of the regulation. Relief would not be extended to compensation that is excluded pursuant to Section I(c) of the proposal or to compensation received in connection with a purchase or sale transaction that, at the time it was entered into, was a non-exempt prohibited transaction. The Department requests comment on whether there are other areas in which exemptions would be desirable to avoid unforeseen consequences in connection with the timing of the finalization of the Proposed Regulation.

3. Low Fee Streamlined Exemption

While the flexibility of the Best Interest Contract Exemption is designed to accommodate a wide range of current business practices and avoid the need for highly prescriptive regulation, the Department acknowledges that there may be actors in the industry that would

[37] The condition requiring the purchase to be made for cash only is not intended to preclude purchases with plan or IRA contributions, but rather to preclude transactions effected in-kind through an exchange of securities or other assets. In-kind exchanges would not be permitted as part of this class exemption due to the potential need for conditions relating to valuation of the assets to be exchanged.

prefer a more prescriptive approach. The Department believes that both approaches could be desirable and could, if designed properly, minimize the harmful impact of conflicts of interest on the quality of advice. Accordingly, in addition to the Best Interest Contract Exemption, the Department is also considering issuing a separate streamlined exemption that would allow Advisers and Financial Institutions (and their Affiliates and Related Entities) to receive otherwise prohibited compensation in connection with plan, participant and beneficiary accounts, and IRA investments in certain high-quality low-fee investments, subject to fewer conditions. However, at this point, the Department has been unable to operationalize this concept and therefore has not proposed text for such a streamlined exemption. Instead, we seek public input to assist our consideration and design of the exemption.

A low-fee streamlined exemption is an attractive idea that, if properly crafted, could achieve important goals. It could minimize the compliance burdens for Advisers offering high-quality low-fee investment products with minimal potential for material conflicts of interest, as discussed further below. Products that met the conditions of the streamlined exemption could be recommended to plans, participants and beneficiaries, and IRA owners, and the Adviser could receive variable and third-party compensation as a result of those recommendations, without satisfying some or all of the conditions of the Best Interest Contract Exemption. The streamlined exemption could reward and encourage best practices with respect to optimizing the quality, amount, and combined, all-in cost of recommended financial products, financial advice, and other related services. In particular, a streamlined exemption could be useful in enhancing access to quality, affordable financial products and advice by savers with smaller account balances. Additionally, because it would be premised on a fee comparison, it would apply only to investments with relatively simple and transparent fee structures.

In this regard, the Department believes that certain high-quality investments are provided pursuant to fee structures in which the payments are sufficiently low that they do not present serious potential material conflicts of interest. In theory, a streamlined exemption with relatively few conditions could be constructed around such investments. Facilitating investments in such high-quality low-fee products would be consistent with the prevailing (though by no means universal) view in the academic literature that posits that the optimal investment strategy is often to buy and hold a diversified portfolio of assets calibrated to track the overall performance of financial markets. Under this view, for example, a long-term recommendation to buy and hold a low-priced (often passively managed) target date fund that is consistent with the investor's future risk appetite trajectory is likely to be sound. As another example, under this view, a medium-term recommendation to buy and hold (for 5 or perhaps 10 years) an inexpensive, risk-matched balanced fund or combination of funds, and afterward to review the investor's circumstances and formulate a new recommendation also is likely to be sound.

If it could be constructed appropriately, a streamlined exemption for high-quality low-fee investments could be subject to relatively few conditions, because the investments present minimal risk of abuse to plans, participants and beneficiaries, and IRA owners. The aim would be to design conditions with sufficient objectivity that Advisers and Financial Institutions could proceed with certainty in their business operations when recommending the investments. The Department does not anticipate that such a streamlined exemption would require Advisers and Financial Institutions to undertake the contractual commitments to adhere to the Impartial Conduct Standards or adopt anti-conflict policies and procedures with respect to advice given on such products, as is proposed in the Best Interest Contract Exemption. However, some of the required disclosures proposed in the Best Interest Contract Exemption would likely be imposed in the streamlined exemption.

The Department has initially focused on mutual funds as the only type of investment widely held by Retirement Investors that would be readily susceptible to the type of expense calculations necessary to implement the low-fee streamlined exemption. This is due to the transparency associated with mutual fund investments and, in particular, the requirement that the mutual fund disclose its fees and operating expenses in its prospectus. Accordingly, data on mutual fund fees and expenses is widely available.

Within the category of mutual fund investments, the Department is considering whether the streamlined exemption would be available to funds with all-in fees below a certain amount. However, the Department lacks data regarding the characteristics of mutual funds with low all-in fees. Consequently, we are exploring whether the streamlined exemption should contain additional conditions to safeguard the interests of plans, participants and beneficiaries, and IRA owners. For example, the streamlined exemption could require that the investment product be ''broadly diversified to minimize risk for targeted return,'' or ''calibrated to provide a balance of risk and return appropriate to the investor's circumstances and preferences for the duration of the recommended holding period.'' However, we recognize that adding conditions might undercut the usefulness of the streamlined exemption.

Request for Comment. The Department requests comment on these possible initial terms of a streamlined exemption and other questions relating to the technical design of such an exemption and its likely utility to Advisers and Financial Institutions. Additionally, the Department requests public input on the likely consequences of the establishment of a low-fee streamlined exemption.

Design. The Department requests public input on the technical design challenges in defining high-quality low-fee investment products that would satisfy the policy goals of the streamlined exemption. We are concerned that there may be no single, objective way to evaluate fees and expenses associated with mutual funds (or other investments) and no single cut-off to determine when fees are sufficiently low. One cut-off could be too low for some investors' needs and too high for others'. A very low cut-off would strongly favor passively managed funds. A high cut-off would permit recommendations that may not be sound and free from bias. Multiple cut-offs for different product categories would be complex and would risk introducing bias between the categories. In addition, it is unclear whether mutual funds with the lowest fees necessarily represent the highest quality investments for Retirement Investors. As noted above, the streamlined exemption would not expressly contain a ''best interest'' standard.

To further aid in the design of the streamlined exemption, the Department requests comments on the questions below. The Regulatory Impact Analysis for the Proposed Regulation, published elsewhere in this issue of the **Federal Register**, describes additional questions the Department is considering regarding

the development of a low-fee streamlined exemption.

• *Should the streamlined exemption cover investment products other than mutual funds?* The streamlined exemption would be based on the premise that low-cost investment products distributed pursuant to relatively unconflicted fee structures present minimal risk of abuse to plans, participants and beneficiaries, and IRA owners. In order to design a streamlined exemption for the sale of such products, the products must have fee structures that are transparent, publicly available, and capable of being compared reliably. Are there other investments commonly held by Retirement Investors that meet these criteria?

• *How should the fee calculation be performed?* How should fees be defined for the fee calculation to ensure a useful metric? Should the fee calculation include both ongoing management/administrative fees and one-time distribution/transactional costs? What time period should the fee calculation cover? Should it cover fees as projected over future time periods (*e.g.,* one, five and ten year periods) to lower the impact of one-time transactional costs such as sales loads? If so, what discount rate should be used to determine the present value of future fees?

• *How should the Department determine the fee cut-off*? If the Department established a streamlined exemption for low-fee mutual funds and other products, how would the precise fee cut-off be determined? How often should it be updated? What are characteristics of mutual funds with very low fees? Should the cut-off be based on a percentage of the assets invested (*i.e.,* a specified number of basis points) or as a percentile of the market? If a percentile, how should reliable data be obtained to determine fund percentiles? Are there available and appropriate sources of industry benchmarking data? Should the Department collect data for this purpose? Is the range of fees in the market known? Are there data that would suggest that mutual funds with relatively low fees are (or are not) high quality investments for a wide variety of Retirement Investors?

• *Should the low-fee cutoff be applied differently to different types of funds?* Should a single fee cut-off apply broadly to all mutual funds, or would that exclude entire categories of funds with certain investment strategies? Would it be appropriate to develop sub-categories of funds for the fee cut-offs? If so, how should the sub-categories be defined?

• *Should ETFs be covered?* Within the category of mutual funds, should exchange-traded funds (ETFs) be covered under the streamlined exemption? If so, how would the commission associated with an ETF transaction be incorporated into the low-fee calculation?

• *What, if any, conditions other than low fees should be required as part of the streamlined exemption?* If the streamlined exemption covers only mutual funds, are conditions relating to their availability and transparent pricing unnecessary? Are conditions relating to liquidity necessary? Should funds covered by the streamlined exemption be required to be broadly diversified to minimize risk for targeted return? Should the streamlined exemption contain a requirement that the investment be calibrated to provide a balance of risk and return appropriate to the investor's circumstances and preferences for the duration of the recommended holding period? Should the funds be required to meet the requirements of a ''qualified default investment alternative,'' as described in 29 CFR 2550.404c–5?

• *How should the low-fee cut-off be communicated to Advisers and Financial Institutions?* Should the initial cut-off and subsequent updates be written as a condition of the exemption, or publicized through other formats? How would Advisers and Financial Institutions be sure that certain funds meet the low-fee cut-off? By what means and how frequently should Advisers and Financial Institutions be required to confirm that mutual funds that they recommend (or recommended in the past) continue to meet the low-fee cut-off?

• *How could consumers police the low-fee cut-off?* What enforcement mechanism could be used to assure that the Advisers taking advantage of such a safe harbor are correctly analyzing whether their products meet the cut-off?

Utility. In addition to seeking comment on the technical design of the streamlined exemption, the Department asks for information on whether the low-fee streamlined exemption would effectively reduce the compliance burden for a significant number of Advisers and Financial Institutions. Because of its design, the low-fee streamlined exemption would generally apply on a product-by-product basis rather than at the Financial Institution level, unless the Financial Institution and its Advisers exclusively advise retail customers to invest in the low-fee products. Therefore, the Department asks:

• *Would Advisers and Financial Institutions restrict their business models to offer only the low-fee mutual funds that the Department envisions covering in the streamlined exemption?* Or, would Advisers that offer products outside the streamlined exemption (higher-fee mutual funds as well as other investment products such as stocks and bonds) rely on the streamlined exemption for the low-fee mutual fund investments and the Best Interest Contract Exemption for the other investments? If Advisers and Financial Institutions had to implement the safeguards required by the Best Interest Contract Exemption for many of their Retirement Investor customers, would the availability of the streamlined exemption result in material cost savings to them?

• *How do low-fee investment products compensate Advisers for distribution?* Do low-fee funds tend to pay sales loads, revenue sharing and 12b–1 fees? If not, how would Advisers and Financial Institutions be compensated within the low-fee confines of the streamlined exemption?

• *What design features would be most likely to enhance the utility of the low-fee streamlined exemption?*

Consequences. The Department seeks the public's views on the potential consequences of granting a streamlined exemption for certain types of investments.

• *Would a streamlined exemption limited to low-fee mutual fund investments or other categories of investments be in the interests of plans and their participants and beneficiaries?* Would the availability of the streamlined exemption discourage Advisers and Financial Institutions from offering other types of investments, including higher-cost mutual funds, even if the offering of such other investments would be in the best interest of the plan, participant or beneficiary, or IRA owner? Would the streamlined exemption have the beneficial effect of reducing investment costs? On the other hand, could the streamlined exemption result in some of the lowest-cost investment products increasing their fees to the cut-off threshold? Would it expand the number of Financial Institutions that developed low-fee options, making them more widely available?

• *How would the streamlined exemption affect the marketplace for investment products?* Would a low-fee streamlined exemption have the unintended effect of unduly promoting certain investment styles? Which types of Advisers and Financial Institutions would be most affected and would they

be likely to revise their business models in response? Would there be increased competition among Advisers and Financial Institutions to offer investment products with lower fees? Would Retirement Investors have more choices to diversify while paying less in fees? Would Financial Institutions and Advisers offer other incentives to Retirement Investors in order to sell specific products?

Availability of Other Prohibited Transaction Exemptions

Certain existing exemptions, including amendments thereto and superseding exemptions, provide relief for specific types of transactions that are outside of the scope of this proposed exemption. A person seeking relief for a transaction covered by one of those existing exemptions would need to comply with its requirements and conditions. Those exemptions are as follows:

(1) PTE 75–1 (Part III),[38] which provides relief for a plan's acquisition of securities during an underwriting or selling syndicate from any person other than a fiduciary who is a member of the syndicate.

(2) PTE 75–1 (Part V),[39] which exempts an extension of credit to a plan from a party in interest.

(3) PTE 83–1,[40] which provides relief for certain transactions involving mortgage pool investment trusts and pass-through certificates evidencing interests therein.

(4) PTE 2004–16,[41] which provides relief for a fiduciary of the plan who is the employer of employees covered under the plan to establish individual retirement plans for certain mandatory distributions on behalf of separated employees at a financial institution that is itself or an affiliate, and also select a proprietary investment product as the initial investment for the plan.

(5) PTE 2006–16,[42] which exempts certain loans of securities by plans to broker-dealers and banks and provides relief for the receipt of compensation by a fiduciary for services rendered in connection with the securities loans.

Applicability Date

The Department is proposing that compliance with the final regulation defining a fiduciary under ERISA section 3(21)(A)(ii) and Code section 4975(e)(3)(B) will begin eight months after publication of the final regulation in the **Federal Register** (Applicability Date). The Department proposes to make this exemption, if granted, available on the Applicability Date. Further, the Department is proposing to revoke relief for transactions involving IRAs from two existing exemptions, PTEs 86–128 and 84–24, as of the Applicability Date.[43] As a result, Advisers and Financial Institutions, including those newly defined as fiduciaries, will generally have to comply with this exemption to receive many common forms of compensation in transactions involving IRAs.

The Department recognizes that complying with the requirements of the exemption may represent a significant adjustment for many Advisers and Financial Institutions, particularly in their dealings with IRA owners. At the same time, in the Department's view, it is essential that Advisers and Financial Institutions wishing to receive compensation under the exemption institute certain conditions for the protection of IRA customers as of the Applicability Date. These safeguards include: Acknowledging fiduciary status,[44] complying with the Impartial Conduct Standards,[45] adopting anti-conflict policies and procedures,[46] notifying EBSA of the use of the exemption,[47] and recordkeeping.[48] The Department requests comment on whether Financial Institutions anticipate that there will be existing contractual obligations or other barriers that would prevent them from implementing the exemption's policies and procedures requirement in this time frame.

The Department also specifically requests comment on whether it should delay certain other conditions of the exemption as applicable to IRA transactions for an additional period (*e.g.,* three months) following the Applicability Date. For example, one possibility would be to delay the requirement that Advisers and Financial Institutions execute a contract with their IRA customers for an additional three-month period, as well as the disclosure requirements in Sections III and the data collection requirements described in Section IX. This phased approach would give Financial Institutions additional time to review and refine their policies and procedures and to put new compliance systems in place, without exposure to contractual liability to the IRA owners.

The Department does not believe that such additional delay would be warranted for Advisers and Financial Institutions with respect to transactions involving ERISA plan sponsors and ERISA plan participants and beneficiaries. Advisers and Financial Institutions to ERISA plans and their participants and beneficiaries are accustomed to working within the existing exemptions, such as PTEs 86–128 and 84–24, and such exemptions would remain available to them while they develop systems for complying with this exemption.[49] Nevertheless, the Department also requests comments on the appropriate period for phasing in some or all of the exemption's conditions with respect to ERISA plans as well as IRAs.

The Department additionally notes that, elsewhere in this issue of the **Federal Register**, it has proposed to revoke another existing exemption, PTE 75–1, Part II(2), in its entirety in connection with a proposed amendment to PTE 86–128. The Department requests comment on whether this exemption is widely used and whether it should delay revocation for some period after the Applicability Date while Advisers and Financial Institutions develop systems for complying with PTE 86–128.

No Relief Proposed From ERISA Section 406(a)(1)(C) or Code Section 4975(c)(1)(C) for the Provision of Services

If granted, this proposed exemption will not provide relief from a transaction prohibited by ERISA section 406(a)(1)(C), or from the taxes imposed by Code section 4975(a) and (b) by reason of Code section 4975(c)(1)(C), regarding the furnishing of goods, services or facilities between a plan and a party in interest. The provision of investment advice to a plan under a contract with a plan fiduciary is a service to the plan and compliance with this exemption will not relieve an Adviser or Financial Institution of the need to comply with ERISA section 408(b)(2), Code section 4975(d)(2), and applicable regulations thereunder.

Paperwork Reduction Act Statement

As part of its continuing effort to reduce paperwork and respondent burden, the Department conducts a preclearance consultation program to provide the general public and Federal

[38] 40 FR 50845 (Oct. 31, 1975).

[39] Id., as amended at 71 FR 5883 (Feb. 3, 2006).

[40] 48 FR 895 (Jan. 7, 1983).

[41] 69 FR 57964 (Sept. 28, 2004).

[42] 71 FR 63786 (Oct. 31, 2006).

[43] See the notices with respect to these proposals, published elsewhere in this issue of the **Federal Register**.

[44] *See* Section II(b).

[45] *See* Section II(c).

[46] *See* Section II(d)(2)–(4).

[47] *See* Section V(a).

[48] *See* Section V(c).

[49] In this regard, the Department anticipates making the Impartial Conduct Standards amendments to PTEs 86–128 and 84–24 effective as of the Applicability Date.

agencies with an opportunity to comment on proposed and continuing collections of information in accordance with the Paperwork Reduction Act of 1995 (PRA) (44 U.S.C. 3506(c)(2)(A)). This helps to ensure that the public understands the Department's collection instructions, respondents can provide the requested data in the desired format, reporting burden (time and financial resources) is minimized, collection instruments are clearly understood, and the Department can properly assess the impact of collection requirements on respondents.

Currently, the Department is soliciting comments concerning the proposed information collection request (ICR) included in the Best Interest Contract Exemption (PTE) as part of its proposal to amend its 1975 rule that defines when a person who provides investment advice to an employee benefit plan or IRA becomes a fiduciary. A copy of the ICR may be obtained by contacting the PRA addressee shown below or at *http://www.RegInfo.gov.*

The Department has submitted a copy of the PTE to the Office of Management and Budget (OMB) in accordance with 44 U.S.C. 3507(d) for review of its information collections. The Department and OMB are particularly interested in comments that:

- Evaluate whether the collection of information is necessary for the proper performance of the functions of the agency, including whether the information will have practical utility;
- Evaluate the accuracy of the agency's estimate of the burden of the collection of information, including the validity of the methodology and assumptions used;
- Enhance the quality, utility, and clarity of the information to be collected; and
- Minimize the burden of the collection of information on those who are to respond, including through the use of appropriate automated, electronic, mechanical, or other technological collection techniques or other forms of information technology, *e.g.,* permitting electronic submission of responses.

Comments should be sent to the Office of Information and Regulatory Affairs, Office of Management and Budget, Room 10235, New Executive Office Building, Washington, DC 20503; Attention: Desk Officer for the Employee Benefits Security Administration. OMB requests that comments be received within 30 days of publication of the proposed PTE to ensure their consideration.

PRA Addressee: Address requests for copies of the ICR to G. Christopher Cosby, Office of Policy and Research, U.S. Department of Labor, Employee Benefits Security Administration, 200 Constitution Avenue NW., Room N–5718, Washington, DC 20210. Telephone (202) 693–8410; Fax: (202) 219–5333. These are not toll-free numbers. ICRs submitted to OMB also are available at *http://www.RegInfo.gov.*

As discussed in detail below, the PTE would require financial institutions and their advisers to enter into a contractual arrangement with retirement investors making investment decisions on behalf of the plan or IRA (*i.e.,* plan participants or beneficiaries, IRA owners, or small plan sponsors (or employees, officers or directors thereof)), and make certain disclosures to the retirement investors and the Department in order to receive relief from ERISA's prohibited transaction rules for the receipt of compensation as a result of a financial institution's and its adviser's advice (*i.e.,* prohibited compensation). Financial institutions would be required to maintain records necessary to prove that the conditions of the exemption have been met. These requirements are ICRs subject to the Paperwork Reduction Act.

The Department has made the following assumptions in order to establish a reasonable estimate of the paperwork burden associated with these ICRs:

- Disclosures distributed electronically will be distributed via means already used by respondents in the normal course of business and the costs arising from electronic distribution will be negligible;
- Financial institutions will use existing in-house resources to prepare the contracts and disclosures, adjust their IT systems, and maintain the recordkeeping systems necessary to meet the requirements of the exemption;
- A combination of personnel will perform the tasks associated with the ICRs at an hourly wage rate of $125.95 for a financial manager, $30.42 for clerical personnel, $79.67 for an IT professional, and $129.94 for a legal professional; [50]
- Approximately 2,800 financial institutions [51] will take advantage of this exemption and they will use this exemption in conjunction with transactions involving nearly all of their clients that are small defined benefit and defined plans, participant directed defined contribution plans, and IRA holders.[52] [53] Eight percent of financial institutions (approximately 224) will be new firms beginning use of this exemption each year.

Contract, Disclosures, and Notices

In order to receive prohibited compensation under this PTE, Section II requires financial institutions and advisers to enter into a written contract with retirement investors affirmatively stating that they are fiduciaries under ERISA or the Code with respect to any recommendations to the retirement investor to purchase, sell or hold specified assets, and that the financial institution and adviser will give advice that is in the best interest of the retirement investor.

Section III(a) requires the adviser to furnish the retirement investor with a disclosure prior to the execution of the purchase of the asset stating the total cost of investing in the asset. Section III(b) requires the adviser or financial institution to furnish the retirement investor with an annual statement listing all assets purchased or sold during the year, as well as the associated fees and expenses paid by the plan, participant or beneficiary account, or IRA, and the compensation received by the financial institution and the adviser. Section III(c) requires the financial institution to maintain a publicly available Web page displaying the compensation (including its source and how it varies within asset classes) that would be received by the adviser, the financial institution and any affiliate

[50] The Department's estimated 2015 hourly labor rates include wages, other benefits, and overhead, and are calculated as follows: mean wage from the 2013 National Occupational Employment Survey (April 2014, Bureau of Labor Statistics *http://www.bls.gov/news.release/pdf/ocwage.pdf*); wages as a percent of total compensation from the Employer Cost for Employee Compensation (June 2014, Bureau of Labor Statistics *http://www.bls.gov/news.release/ecec.t02.htm*); overhead as a multiple of compensation is assumed to be 25 percent of total compensation for paraprofessionals, 20 percent of compensation for clerical, and 35 percent of compensation for professional; annual inflation assumed to be 2.3 percent annual growth of total labor cost since 2013 (Employment Costs Index data for private industry, September 2014 *http://www.bls.gov/news.release/eci.nr0.htm*).

[51] As described in the regulatory impact analysis for the accompanying rule, the Department estimates that approximately 2,619 broker dealers service the retirement market. The Department anticipates that the exemption will be used primarily, but not exclusively, by broker-dealers. Further, the Department assumes that all broker-dealers servicing the retirement market will use the exemption. Beyond the 2,619 broker-dealers, the Department estimates that almost 200 other financial institutions will use the exemption.

[52] The Department welcomes comment on this estimate.

[53] For purposes of this analysis, ''IRA holders'' include rollovers from ERISA plans.

[54] The Department assumes that nearly all financial institutions already maintain Web sites and that updates to the disclosure required by Section III(c) could be automated. Therefore, the IT costs required by Section III(c) would be almost exclusively start-up costs. The Department invites comment on these assumptions.

with respect to any asset that a plan, participant or beneficiary account, or IRA could purchase through the adviser.

If the financial institution limits the assets available for sale, Section IV requires the financial institution to furnish the retirement investor with a written description of the limitations placed on the menu. The adviser must also notify the retirement investor if it does not recommend a sufficiently broad range of assets to meet the retirement investor's needs.

Finally, before the financial institution begins engaging in transactions covered under this PTE, Section V(a) requires the financial institution to provide notice to the Department of its intent to rely on this proposed PTE.

Legal Costs

The Department estimates that drafting the PTE's contractual provisions, the notice to the Department, and the limited menu disclosure will require 60 hours of legal time for financial institutions during the first year that the financial institution uses the PTE. This legal work results in approximately 168,000 hours of burden during the first year and approximately 13,000 hours of burden during subsequent years at an equivalent cost of $21.8 million and $1.7 million respectively.

IT Costs

The Department estimates that updating computer systems to create the required disclosures, insert the contract provisions into existing contracts, maintain the required records, and publish information on the Web site will require 100 hours of IT staff time for financial institutions during the first year that the financial institution uses the PTE.[54] This IT work results in approximately 280,000 hours of burden during the first year and approximately 22,000 hours of burden during subsequent years at an equivalent cost of $22.3 million and $1.8 million respectively.

Production and Distribution of Required Contract, Disclosures, and Notices

The Department estimates that approximately 21.3 million plans and IRAs have relationships with financial institutions and are likely to engage in transactions covered under this PTE.

The Department assumes that financial institutions already maintain contracts with their clients. Therefore, the required contractual provisions will be inserted into existing contracts with no additional cost for production or distribution.

The Department assumes that financial institutions will send approximately 24 point-of-sale transaction disclosures each year to 37,000 small defined benefit plans and small defined contribution plans that do not allow participants to direct investments. All of these disclosures will be sent electronically at de minimis cost. Financial institutions will send two point-of-sale transaction disclosures each year to 1.1 million defined contribution plans participants and 20.2 million IRA holders. These disclosures will be distributed electronically to 75 percent of defined contribution plan participants and IRA holders. Paper copies of the disclosure will be given to 25 percent of defined contribution plan participants and IRA holders. Further, 15 percent of the paper copies will be mailed, while the other 85 percent will be hand-delivered during in-person meetings. The Department estimates that electronic distribution will result in de minimis cost, while paper distribution will cost approximately $1.3 million. Paper distribution will also require one minute of clerical time to print the disclosure and one minute of clerical time to mail the disclosure, resulting in 204,000 hours at an equivalent cost of $6.2 million annually.

The Department estimates that 21.3 million plans and IRAs will receive an annual statement. Small defined benefit and defined contribution plans that do not allow participants to direct investments will receive a ten page statement electronically at de minimis cost. Defined contribution plan participants and IRA holders will receive a two page statement. This statement will be distributed electronically to 38 percent of defined contribution plan participants and 50 percent of IRA holders. Paper statements will be mailed to 62 percent of defined contribution plan participants and 50 percent of IRA holders. The Department estimates that electronic distribution will result in de minimis cost, while paper distribution will cost approximately $6.3 million. Paper distribution will also require two minutes of clerical time to print and mail the disclosure, resulting in 359,000 hours at an equivalent cost of $10.9 million annually.

For purposes of this estimate, the Department assumes that nearly all financial institutions using the PTE will limit their investment menus in some way and provide the limited menu disclosure. Accordingly, during the first year of the exemption the Department estimates that all of the 21.3 million plans and IRAs would receive the one-page limited menu disclosure. In subsequent years, approximately 1.7 million plans and IRAs would receive the one-page limited menu disclosure. Small defined benefit and defined contribution plans that do not allow participants to direct investments would receive the disclosure electronically at de minimis cost. The disclosure would be distributed electronically to 75 percent of defined contribution plan participants and IRA holders. Paper copies of the disclosure would be given to 25 percent of defined contribution plan participants and IRA holders. Further, 15 percent of the paper copies would be mailed, while the other 85 percent would be hand-delivered during in-person meetings. The Department estimates that electronic distribution would result in de minimis cost, while paper distribution would cost approximately $922,000 during the first year and approximately $74,000 in subsequent years. Paper distribution would also require one minute of clerical time to print the disclosure and one minute of clerical time to mail the disclosure, resulting in 244,000 hours in the first year and 20,000 hours in subsequent years at an equivalent cost of $7.4 million and $595,000 respectively. If, as seems likely, many financial institutions choose not to limit the universe of investment recommendations, we would expect the actual costs to be substantially smaller.

Finally, the Department estimates that all of the 2,800 financial institutions would mail the required one-page notice to the Department during the first year and approximately 224 new financial institutions would mail the required one-page notice to the Department in subsequent years. Producing and distributing this notice would cost approximately $1,500 during the first year and approximately $100 in subsequent years. Producing and distributing this notice would also require 2 minutes of clerical time resulting in a burden of approximately 93 hours during the first year and approximately 7 hours in subsequent years at an equivalent cost of $2,800 and $200 respectively.

Recordkeeping Requirement

Section V(b) requires financial institutions to maintain investment return data in a manner accessible for examination by the Department for six years. Section V(c) and (d) requires

[54] The Department assumes that nearly all financial institutions already maintain Web sites and that updates to the disclosure required by Section III(c) could be automated. Therefore, the IT costs required by Section III(c) would be almost exclusively start-up costs. The Department invites comment on these assumptions.

financial institutions to maintain or cause to be maintained for six years and disclosed upon request the records necessary for the Department, Internal Revenue Service, plan fiduciary, contributing employer or employee organization whose members are covered by the plan, and participants, beneficiaries and IRA owners to determine whether the conditions of this exemption have been met in a manner that is accessible for audit and examination.

Most of the data retention requirements in Section V(b) are consistent with data retention requirements made by the SEC and FINRA. In addition, the data retention requirements correspond to the six year statute of limitations in Section 413 of ERISA. Insofar as the data retention time requirements in Section V(b) are lengthier than those required by the SEC and FINRA, the Department assumes that retaining data for an additional time period is a de minimis additional burden.

The records required in Section V(c) and Section V(d) are generally kept as regular and customary business practices. Therefore, the Department has estimated that the additional time needed to maintain records consistent with the exemption will only require about one-half hour, on average, annually for a financial manager to organize and collate the documents or else draft a notice explaining that the information is exempt from disclosure, and an additional 15 minutes of clerical time to make the documents available for inspection during normal business hours or prepare the paper notice explaining that the information is exempt from disclosure. Thus, the Department estimates that a total of 45 minutes of professional time per Financial Institution would be required for a total hour burden of 2,100 hours at an equivalent cost of $198,000.

In connection with this recordkeeping and disclosure requirements discussed above, Section V(d)(2) and (3) provide that financial institutions relying on the exemption do not have to disclose trade secrets or other confidential information to members of the public (*i.e.,* plan fiduciaries, contributing employers or employee organizations whose members are covered by the plan, participants and beneficiaries and IRA owners), but that in the event a financial institution refuses to disclose information on this basis, it must provide a written notice to the requester advising of the reasons for the refusal and advising that the Department may request such information. The Department's experience indicates that this provision is not commonly invoked, and therefore, the written notice is rarely, if ever, generated. Therefore, the Department believes the cost burden associated with this clause is de minimis. No other cost burden exists with respect to recordkeeping.

Overall Summary

Overall, the Department estimates that in order to meet the conditions of this PTE, 2,800 financial institutions will produce 86 million disclosures and notices during the first year of this PTE and 66.4 million disclosures and notices during subsequent years. These disclosures and notices will result in 1.3 million burden hours during the first year and 620,000 burden hours in subsequent years, at an equivalent cost of $68.9 million and $21.4 million respectively. The disclosures and notices in this exemption will also result in a total cost burden for materials and postage of $8.6 million during the first year and $7.7 million during subsequent years.

These paperwork burden estimates are summarized as follows:

Type of Review: New collection (Request for new OMB Control Number).

Agency: Employee Benefits Security Administration, Department of Labor.

Titles: (1) Proposed Best Interest Contract Exemption.

OMB Control Number: 1210–NEW.

Affected Public: Business or other for-profit.

Estimated Number of Respondents: 2,800.

Estimated Number of Annual Responses: 85,985,156 in the first year and 66,394,985 in subsequent years.

Frequency of Response: Initially, Annually, and When engaging in exempted transaction.

Estimated Total Annual Burden Hours: 1,256,862 during the first year and 619,766 in subsequent years.

Estimated Total Annual Burden Cost: $8,582,764 during the first year and $7,733,247 in subsequent years.

General Information

The attention of interested persons is directed to the following:

(1) The fact that a transaction is the subject of an exemption under ERISA section 408(a) and Code section 4975(c)(2) does not relieve a fiduciary or other party in interest or disqualified person with respect to a plan or IRA from certain other provisions of ERISA and the Code, including any prohibited transaction provisions to which the exemption does not apply and the general fiduciary responsibility provisions of ERISA section 404 which require, among other things, that a fiduciary discharge his or her duties respecting the plan solely in the interests of the participants and beneficiaries of the plan. Additionally, the fact that a transaction is the subject of an exemption does not affect the requirement of Code section 401(a) that the plan must operate for the exclusive benefit of the employees of the employer maintaining the plan and their beneficiaries;

(2) Before an exemption may be granted under ERISA section 408(a) and Code section 4975(c)(2), the Department must find that the exemption is administratively feasible, in the interests of plans and their participants and beneficiaries and IRA owners, and protective of the rights of participants and beneficiaries of the plan and IRA owners;

(3) If granted, the proposed exemption is applicable to a particular transaction only if the transaction satisfies the conditions specified in the exemption; and

(4) The proposed exemption, if granted, will be supplemental to, and not in derogation of, any other provisions of ERISA and the Code, including statutory or administrative exemptions and transitional rules. Furthermore, the fact that a transaction is subject to an administrative or statutory exemption is not dispositive of whether the transaction is in fact a prohibited transaction.

Written Comments

The Department invites all interested persons to submit written comments on the proposed exemption to the address and within the time period set forth above. All comments received will be made a part of the record. Comments should state the reasons for the writer's interest in the proposed exemption. Comments received will be available for public inspection at the above address.

Proposed Exemption

Section I—Best Interest Contract Exemption

(a) *In general.* ERISA and the Internal Revenue Code prohibit fiduciary advisers to employee benefit plans (Plans) and individual retirement plans (IRAs) from receiving compensation that varies based on their investment recommendations. Similarly, fiduciary advisers are prohibited from receiving compensation from third parties in connection with their advice. This exemption permits certain persons who provide investment advice to Retirement Investors, and their associated financial institutions,

affiliates and other related entities, to receive such otherwise prohibited compensation as described below.

(b) *Covered transactions.* This exemption permits Advisers, Financial Institutions, and their Affiliates and Related Entities to receive compensation for services provided in connection with a purchase, sale or holding of an Asset by a Plan, participant or beneficiary account, or IRA, as a result of the Adviser's and Financial Institution's advice to any of the following ''Retirement Investors:''

(1) A participant or beneficiary of a Plan subject to Title I of ERISA with authority to direct the investment of assets in his or her Plan account or to take a distribution;

(2) The beneficial owner of an IRA acting on behalf of the IRA; or

(3) A plan sponsor as described in ERISA section 3(16)(B) (or any employee, officer or director thereof) of a non-participant-directed Plan subject to Title I of ERISA with fewer than 100 participants, to the extent it acts as a fiduciary who has authority to make investment decisions for the Plan.

As detailed below, parties seeking to rely on the exemption must contractually agree to adhere to Impartial Conduct Standards in rendering advice regarding Assets; warrant that they have adopted policies and procedures designed to mitigate the dangers posed by Material Conflicts of Interest; disclose important information relating to fees, compensation, and Material Conflicts of Interest; and retain documents and data relating to investment recommendations regarding Assets. The exemption provides relief from the restrictions of ERISA section 406(a)(1)(D) and 406(b) and the sanctions imposed by Code section 4975(a) and (b), by reason of Code section 4975(c)(1)(D), (E) and (F). The Adviser and Financial Institution must comply with the conditions of Sections II–V to rely on this exemption.

(c) *Exclusions.* This exemption does not apply if:

(1) The Plan is covered by Title I of ERISA, and (i) the Adviser, Financial Institution or any Affiliate is the employer of employees covered by the Plan, or (ii) the Adviser or Financial Institution is a named fiduciary or plan administrator (as defined in ERISA section 3(16)(A)) with respect to the Plan, or an affiliate thereof, that was selected to provide advice to the Plan by a fiduciary who is not Independent;

(2) The compensation is received as a result of a transaction in which the Adviser is acting on behalf of its own account or the account of the Financial Institution, or the account of a person directly or indirectly, through one or more intermediaries, controlling, controlled by, or under common control with the Financial Institution (*i.e.,* a principal transaction);

(3) The compensation is received as a result of investment advice to a Retirement Investor generated solely by an interactive Web site in which computer software-based models or applications provide investment advice based on personal information each investor supplies through the Web site without any personal interaction or advice from an individual Adviser (*i.e.,* ''robo advice''); or

(4) The Adviser (i) exercises any discretionary authority or discretionary control respecting management of the Plan or IRA assets involved in the transaction or exercises any authority or control respecting management or disposition of the assets, or (ii) has any discretionary authority or discretionary responsibility in the administration of the Plan or IRA.

Section II—Contract, Impartial Conduct, and Other Requirements

(a) *Contract.* Prior to recommending that the Plan, participant or beneficiary account, or IRA purchase, sell or hold the Asset, the Adviser and Financial Institution enter into a written contract with the Retirement Investor that incorporates the terms required by Section II(b)–(e).

(b) *Fiduciary.* The written contract affirmatively states that the Adviser and Financial Institution are fiduciaries under ERISA or the Code, or both, with respect to any investment recommendations to the Retirement Investor.

(c) *Impartial Conduct Standards.* The Adviser and the Financial Institution affirmatively agree to, and comply with, the following:

(1) When providing investment advice to the Retirement Investor regarding the Asset, the Adviser and Financial Institution will provide investment advice that is in the Best Interest of the Retirement Investor (*i.e.,* advice that reflects the care, skill, prudence, and diligence under the circumstances then prevailing that a prudent person would exercise based on the investment objectives, risk tolerance, financial circumstances, and needs of the Retirement Investor, without regard to the financial or other interests of the Adviser, Financial Institution or any Affiliate, Related Entity, or other party);

(2) When providing investment advice to the Retirement Investor regarding the Asset, the Adviser and Financial Institution will not recommend an Asset if the total amount of compensation anticipated to be received by the Adviser, Financial Institution, Affiliates and Related Entities in connection with the purchase, sale or holding of the Asset by the Plan, participant or beneficiary account, or IRA, will exceed reasonable compensation in relation to the total services they provide to the Retirement Investor; and

(3) The Adviser's and Financial Institution's statements about the Asset, fees, Material Conflicts of Interest, and any other matters relevant to a Retirement Investor's investment decisions, will not be misleading.

(d) *Warranties.* The Adviser and Financial Institution affirmatively warrant the following:

(1) The Adviser, Financial Institution, and Affiliates will comply with all applicable federal and state laws regarding the rendering of the investment advice, the purchase, sale and holding of the Asset, and the payment of compensation related to the purchase, sale and holding of the Asset;

(2) The Financial Institution has adopted written policies and procedures reasonably designed to mitigate the impact of Material Conflicts of Interest and ensure that its individual Advisers adhere to the Impartial Conduct Standards set forth in Section II(c);

(3) In formulating its policies and procedures, the Financial Institution has specifically identified Material Conflicts of Interest and adopted measures to prevent the Material Conflicts of Interest from causing violations of the Impartial Conduct Standards set forth in Section II(c); and

(4) Neither the Financial Institution nor (to the best of its knowledge) any Affiliate or Related Entity uses quotas, appraisals, performance or personnel actions, bonuses, contests, special awards, differential compensation or other actions or incentives to the extent they would tend to encourage individual Advisers to make recommendations that are not in the Best Interest of the Retirement Investor. Notwithstanding the foregoing, the contractual warranty set forth in this Section II(d)(4) does not prevent the Financial Institution or its Affiliates and Related Entities from providing Advisers with differential compensation based on investments by Plans, participant or beneficiary accounts, or IRAs, to the extent such compensation would not encourage advice that runs counter to the Best Interest of the Retirement Investor (*e.g.,* differential compensation based on such neutral factors as the difference in time and analysis necessary to provide prudent advice with respect to different types of investments would be permissible).

(e) *Disclosures.* The written contract must specifically:

(1) Identify and disclose any Material Conflicts of Interest;

(2) Inform the Retirement Investor that the Retirement Investor has the right to obtain complete information about all the fees currently associated with the Assets in which it is invested, including all of the direct and indirect fees paid payable to the Adviser, Financial Institution, and any Affiliates; and

(3) Disclose to the Retirement Investor whether the Financial Institution offers Proprietary Products or receives Third Party Payments with respect to the purchase, sale or holding of any Asset, and of the address of the Web site required by Section III(c) that discloses the compensation arrangements entered into by Advisers and the Financial Institution.

(f) *Prohibited Contractual Provisions.* The written contract shall not contain the following:

(1) Exculpatory provisions disclaiming or otherwise limiting liability of the Adviser or Financial Institution for a violation of the contract's terms; and

(2) A provision under which the Plan, IRA or Retirement Investor waives or qualifies its right to bring or participate in a class action or other representative action in court in a dispute with the Adviser or Financial Institution.

Section III—Disclosure Requirements

(a) *Transaction Disclosure.*

(1) *Disclosure.* Prior to the execution of the purchase of the Asset by the Plan, participant or beneficiary account, or IRA, the Adviser furnishes to the Retirement Investor a chart that provides, with respect to each Asset recommended, the Total Cost to the Plan, participant or beneficiary account, or IRA, of investing in the Asset for 1-, 5- and 10-year periods expressed as a dollar amount, assuming an investment of the dollar amount recommended by the Adviser and reasonable assumptions about investment performance that are disclosed.

The disclosure chart required by this section need not be provided with respect to a subsequent recommendation to purchase the same investment product if the chart was previously provided to the Retirement Investor within the past twelve months and the Total Cost has not materially changed.

(2) *Total Cost.* The ''Total Cost'' of investing in an Asset means the sum of the following, as applicable:

(A) *Acquisition costs.* Any costs of acquiring the Asset that are paid by direct charge to the Plan, participant or beneficiary account, or IRA, or that reduce the amount invested in the Asset (*e.g.,* any loads, commissions, or mark-ups on Assets bought from dealers, and account opening fees, if applicable).

(B) *Ongoing costs.* Any ongoing (*e.g.,* annual) costs attributable to fees and expenses charged for the operation of an Asset that is a pooled investment fund (*e.g.,* mutual fund, bank collective investment fund, insurance company pooled separate account) that reduces the Asset's rate of return (*e.g.,* amounts attributable to a mutual fund expense ratio and account fees). This includes amounts paid by the pooled investment fund to intermediaries, such as sub-TA fees, sub-accounting fees, etc.

(C) *Disposition costs.* Any costs of disposing of or redeeming an interest in the Asset that are paid by direct charge to the Plan, participant or beneficiary account, or IRA, or that reduce the amounts received by the Plan, participant or beneficiary account, or IRA (*e.g.,* surrender fees, back-end loads, etc., that are always applicable (*i.e.,* do not sunset), mark-downs on assets sold to dealers, and account closing fees, if applicable).

(D) *Others.* Any costs not described in (A)–(C) that reduce the Asset's rate of return, are paid by direct charge to the Plan, participant or beneficiary account, or IRA, or reduce the amounts received by the Plan, participant or beneficiary account, or IRA (*e.g.,* contingent fees, such as back-end loads that phase out over time (with such terms explained beneath the table)).

(3) *Model Chart.* Appendix II to this exemption contains a model chart that may be used to provide the information required under this Section III(a). Use of the model chart is not mandatory. However, use of an appropriately completed model chart will be deemed to satisfy the requirements of this Section III(a).

(b) *Annual Disclosure.* The Adviser or Financial Institution provides the following written information to the Retirement Investor, annually, within 45 days of the end of the applicable year, in a succinct single disclosure:

(1) A list identifying each Asset purchased or sold during the applicable period and the price at which the Asset was purchased or sold;

(2) A statement of the total dollar amount of all fees and expenses paid by the Plan, participant or beneficiary account, or IRA (directly and indirectly) with respect to each Asset purchased, held or sold during the applicable period; and

(3) A statement of the total dollar amount of all compensation received by the Adviser and Financial Institution, directly or indirectly, from any party, as a result of each Asset sold, purchased or held by the Plan, participant or beneficiary account, or IRA during the applicable period.

(c) *Web page.*

(1) The Financial Institution maintains a Web page, freely accessible to the public, which shows the following information:

(A) The direct and indirect material compensation payable to the Adviser, Financial Institution and any Affiliate for services provided in connection with each Asset (or, if uniform across a class of Assets, the class of Assets) that a Plan, participant or beneficiary account, or an IRA is able to purchase, hold, or sell through the Adviser or Financial Institution, and that a Plan, participant or beneficiary account, or an IRA has purchased, held, or sold within the last 365 days. The compensation may be expressed as a monetary amount, formula or percentage of the assets involved in the purchase, sale or holding; and

(B) The source of the compensation, and how the compensation varies within and among Assets.

(2) The Financial Institution's Web page provides access to the information in (1)(A) and (B) in a machine readable format.

Section IV—Range of Investment Options

(a) *General.* The Financial Institution offers for purchase, sale or holding, and the Adviser makes available to the Plan, participant or beneficiary account, or IRA for purchase, sale or holding, a range of Assets that is broad enough to enable the Adviser to make recommendations with respect to all of the asset classes reasonably necessary to serve the Best Interests of the Retirement Investor in light of its investment objectives, risk tolerance, and specific financial circumstances.

(b) *Limited Range of Investment Options.* Section (a) notwithstanding, a Financial Institution may limit the Assets available for purchase, sale or holding based on whether the Assets are Proprietary Products, generate Third Party Payments, or for other reasons, and still rely on the exemption, provided that:

(1) The Financial Institution makes a specific written finding that the limitations it has placed on the Assets made available to an Adviser for purchase, sale or holding by Plans, participant and beneficiary accounts, and IRAs do not prevent the Adviser

from providing advice that is in the Best Interest of the Retirement Investor (*i.e.,* advice that reflects the care, skill, prudence, and diligence under the circumstances then prevailing that a prudent person would exercise based on the investment objectives, risk tolerance, financial circumstances, and needs of the Retirement Investor, without regard to the financial or other interests of the Adviser, Financial Institution or any Affiliate, Related Entity, or other party) or otherwise adhering to the Impartial Conduct Standards;

(2) Any compensation received in connection with a purchase, sale or holding of the Asset by a Plan, participant or beneficiary account, or an IRA, is reasonable in relation to the value of the specific services provided to the Retirement Investor in exchange for the payments and not in excess of the services' fair market value;

(3) Before giving investment recommendations to Retirement Investors, the Adviser or Financial Institution gives the Retirement Investor clear written notice of the limitations placed on the Assets that the Adviser may offer for purchase, sale or holding by a Plan, participant or beneficiary account, or an IRA. Notice is insufficient if it merely states that the Financial Institution or Adviser ''may'' limit investment recommendations based on whether the Assets are Proprietary Products or generate Third Party Payments, or for other reasons, without specific disclosure of the extent to which recommendations are, in fact, limited on that basis; and

(4) The Adviser notifies the Retirement Investor if the Adviser does not recommend a sufficiently broad range of Assets to meet the Retirement Investor's needs.

(c) *ERISA plan participants and beneficiaries.* Some Advisers and Financial Institutions provide advice to participants in ERISA-covered participant directed individual account Plans in which the menu of investment options is selected by an Independent Plan fiduciary. In such cases, provided the Adviser and Financial Institution did not provide investment advice to the Plan fiduciary regarding the composition of the menu, the Adviser and Financial Institution do not have to comply with Section IV(a)–(c) in connection with their advice to individual participants and beneficiaries on the selection of Assets from the menu provided. This exception is not available for advice with respect to investments within open brokerage windows or otherwise outside the Plan's designated investment options.

Section V—Disclosure to the Department and Recordkeeping

(a) *EBSA Disclosure.* Before receiving compensation in reliance on the exemption in Section I, the Financial Institution notifies the Department of Labor of the intention to rely on this class exemption. The notice will remain in effect until revoked in writing by the Financial Institution. The notice need not identify any Plan or IRA.

(b) *Data Request.* The Financial Institution maintains the data that is subject to request pursuant to Section IX in a manner that is accessible for examination by the Department for six (6) years from the date of the transaction subject to relief hereunder. No party, other than the Financial Institution responsible for complying with this paragraph (b), will be subject to the taxes imposed by Code section 4975(a) and (b), if applicable, if the data is not maintained or not available for examination as required by paragraph (b).

(c) *Recordkeeping.* The Financial Institution maintains for a period of six (6) years, in a manner that is accessible for examination, the records necessary to enable the persons described in paragraph (d) of this Section to determine whether the conditions of this exemption have been met, except that:

(1) If such records are lost or destroyed, due to circumstances beyond the control of the Financial Institution, then no prohibited transaction will be considered to have occurred solely on the basis of the unavailability of those records; and

(2) No party, other than the Financial Institution responsible for complying with this paragraph (c), will be subject to the civil penalty that may be assessed under ERISA section 502(i) or the taxes imposed by Code section 4975(a) and (b), if applicable, if the records are not maintained or are not available for examination as required by paragraph (d), below.

(d) (1) Except as provided in paragraph (d)(2) of this Section, and notwithstanding any provisions of ERISA section 504(a)(2) and (b), the records referred to in paragraph (c) of this Section are unconditionally available at their customary location for examination during normal business hours by:

(A) Any authorized employee or representative of the Department or the Internal Revenue Service;

(B) Any fiduciary of a Plan that engaged in a purchase, sale or holding of an Asset described in this exemption, or any authorized employee or representative of such fiduciary;

(C) Any contributing employer and any employee organization whose members are covered by a Plan described in paragraph (d)(1)(B), or any authorized employee or representative of these entities; or

(D) Any participant or beneficiary of a Plan described in paragraph (B), IRA owner, or the authorized representative of such participant, beneficiary or owner; and

(2) None of the persons described in paragraph (d)(1)(B)–(D) of this Section are authorized to examine privileged trade secrets or privileged commercial or financial information, of the Financial Institution, or information identifying other individuals.

(3) Should the Financial Institution refuse to disclose information on the basis that the information is exempt from disclosure, the Financial Institution must, by the close of the thirtieth (30th) day following the request, provide a written notice advising the requestor of the reasons for the refusal and that the Department may request such information.

Section VI—Insurance and Annuity Contract Exemption

(a) *In general.* In addition to prohibiting fiduciaries from receiving compensation from third parties and compensation that varies on the basis of the fiduciaries' investment advice, ERISA and the Internal Revenue Code prohibit the purchase by a Plan, participant or beneficiary account, or IRA of an insurance or annuity product from an insurance company that is a service provider to the Plan or IRA. This exemption permits a Plan, participant or beneficiary account, or IRA to purchase an Asset that is an insurance or annuity contract in accordance with an Adviser's advice, from a Financial Institution that is an insurance company and that is a service provider to the Plan or IRA. This exemption is provided because purchases of insurance and annuity products are often prohibited purchases and sales involving insurance companies that have a pre-existing party in interest relationship to the Plan or IRA.

(b) *Covered transaction.* The restrictions of ERISA section 406(a)(1)(A) and (D), and the sanctions imposed by Code section 4975(a) and (b), by reason of Code section 4975(c)(1)(A) and (D), shall not apply to a fiduciary's causing the purchase of an Asset that is an insurance or annuity contract by a non-participant-directed Plan subject to Title I of ERISA that has fewer than 100 participants, participant or beneficiary account, or IRA, from a Financial Institution that is an

insurance company and that is a party in interest or disqualified person, if:

(1) The transaction is effected by the insurance company in the ordinary course of its business as an insurance company;

(2) The combined total of all fees and compensation received by the insurance company and any Affiliate is not in excess of reasonable compensation under the circumstances;

(3) The purchase is for cash only; and

(4) The terms of the purchase are at least as favorable to the Plan, participant or beneficiary account, or IRA as the terms generally available in an arm's length transaction with an unrelated party.

(c) *Exclusion:* The exemption in this Section VI does not apply if the Plan is covered by Title I of ERISA, and (i) the Adviser, Financial Institution or any Affiliate is the employer of employees covered by the Plan, or (ii) the Adviser and Financial Institution is a named fiduciary or plan administrator (as defined in ERISA section 3(16)(A)) with respect to the Plan, or an affiliate thereof, that was selected to provide advice to the plan by a fiduciary who is not Independent.

Section VII—Exemption for Pre-Existing Transactions

(a) *In general.* ERISA and the Internal Revenue Code prohibit Advisers, Financial Institutions and their Affiliates and Related Entities from receiving variable or third-party compensation as a result of the Adviser's and Financial Institution's advice to a Plan, participant or beneficiary, or IRA owner. Some Advisers and Financial Institutions did not consider themselves fiduciaries within the meaning of 29 CFR 2510–3.21 before the applicability date of the amendment to 29 CFR 2510–3.21 (the Applicability Date). Other Advisers and Financial Institutions entered into transactions involving Plans, participant or beneficiary accounts, or IRAs before the Applicability Date, in accordance with the terms of a prohibited transaction exemption that has since been amended. This exemption permits Advisers, Financial Institutions, and their Affiliates and Related Entities, to receive compensation, such as 12b–1 fees, in connection with the purchase, sale or holding of an Asset by a Plan, participant or beneficiary account, or an IRA, as a result of the Adviser's and Financial Institution's advice, that occurred prior to the Applicability Date, as described and limited below.

(b) *Covered transaction.* Subject to the applicable conditions described below, the restrictions of ERISA section 406(a)(1)(D) and 406(b) and the sanctions imposed by Code section 4975(a) and (b), by reason of Code section 4975(c)(1)(D), (E) and (F), shall not apply to the receipt of compensation by an Adviser, Financial Institution, and any Affiliate and Related Entity, for services provided in connection with the purchase, holding or sale of an Asset, as a result of the Adviser's and Financial Institution's advice, that was purchased, sold, or held by a Plan, participant or beneficiary account, or an IRA before the Applicability Date if:

(1) The compensation is not excluded pursuant to Section I(c) of the Best Interest Contract Exemption;

(2) The compensation is received pursuant to an agreement, arrangement or understanding that was entered into prior to the Applicability Date;

(3) The Adviser and Financial Institution do not provide additional advice to the Plan regarding the purchase, sale or holding of the Asset after the Applicability Date; and

(4) The purchase or sale of the Asset was not a non-exempt prohibited transaction pursuant to ERISA section 406 and Code section 4975 on the date it occurred.

Section VIII—Definitions

For purposes of these exemptions:

(a) ''Adviser'' means an individual who:

(1) Is a fiduciary of a Plan or IRA solely by reason of the provision of investment advice described in ERISA section 3(21)(A)(ii) or Code section 4975(e)(3)(B), or both, and the applicable regulations, with respect to the Assets involved in the transaction;

(2) Is an employee, independent contractor, agent, or registered representative of a Financial Institution; and

(3) Satisfies the applicable federal and state regulatory and licensing requirements of insurance, banking, and securities laws with respect to the covered transaction.

(b) ''Affiliate'' of an Adviser or Financial Institution means—

(1) Any person directly or indirectly through one or more intermediaries, controlling, controlled by, or under common control with the Adviser or Financial Institution. For this purpose, ''control'' means the power to exercise a controlling influence over the management or policies of a person other than an individual;

(2) Any officer, director, employee, agent, registered representative, relative (as defined in ERISA section 3(15)), member of family (as defined in Code section 4975(e)(6)) of, or partner in, the Adviser or Financial Institution; and

(3) Any corporation or partnership of which the Adviser or Financial Institution is an officer, director or employee or in which the Adviser or Financial Institution is a partner.

(c) An ''Asset,'' for purposes of this exemption, includes only the following investment products: Bank deposits, certificates of deposit (CDs), shares or interests in registered investment companies, bank collective funds, insurance company separate accounts, exchange-traded REITs, exchange-traded funds, corporate bonds offered pursuant to a registration statement under the Securities Act of 1933, agency debt securities as defined in FINRA Rule 6710(l) or its successor, U.S. Treasury securities as defined in FINRA Rule 6710(p) or its successor, insurance and annuity contracts, guaranteed investment contracts, and equity securities within the meaning of 17 CFR 230.405 that are exchange-traded securities within the meaning of 17 CFR 242.600. Excluded from this definition is any equity security that is a security future or a put, call, straddle, or other option or privilege of buying an equity security from or selling an equity security to another without being bound to do so.

(d) Investment advice is in the ''Best Interest'' of the Retirement Investor when the Adviser and Financial Institution providing the advice act with the care, skill, prudence, and diligence under the circumstances then prevailing that a prudent person would exercise based on the investment objectives, risk tolerance, financial circumstances, and needs of the Retirement Investor, without regard to the financial or other interests of the Adviser, Financial Institution or any Affiliate, Related Entity, or other party.

(e) ''Financial Institution'' means the entity that employs the Adviser or otherwise retains such individual as an independent contractor, agent or registered representative and that is:

(1) Registered as an investment adviser under the Investment Advisers Act of 1940 (15 U.S.C. 80b–1 *et seq.*) or under the laws of the state in which the adviser maintains its principal office and place of business;

(2) A bank or similar financial institution supervised by the United States or state, or a savings association (as defined in section 3(b)(1) of the Federal Deposit Insurance Act (12 U.S.C. 1813(b)(1)), but only if the advice resulting in the compensation is provided through a trust department of the bank or similar financial institution or savings association which is subject to periodic examination and review by federal or state banking authorities;

(3) An insurance company qualified to do business under the laws of a state, provided that such insurance company:

(A) Has obtained a Certificate of Authority from the insurance commissioner of its domiciliary state which has neither been revoked nor suspended,

(B) Has undergone and shall continue to undergo an examination by an Independent certified public accountant for its last completed taxable year or has undergone a financial examination (within the meaning of the law of its domiciliary state) by the state's insurance commissioner within the preceding 5 years, and

(C) Is domiciled in a state whose law requires that actuarial review of reserves be conducted annually by an Independent firm of actuaries and reported to the appropriate regulatory authority; or

(4) A broker or dealer registered under the Securities Exchange Act of 1934 (15 U.S.C. 78a *et seq.*).

(f) ''Independent'' means a person that:

(1) Is not the Adviser, the Financial Institution or any Affiliate relying on the exemption,

(2) Does not receive compensation or other consideration for his or her own account from the Adviser, the Financial Institution or Affiliate; and

(3) Does not have a relationship to or an interest in the Adviser, the Financial Institution or Affiliate that might affect the exercise of the person's best judgment in connection with transactions described in this exemption.

(g) ''Individual Retirement Account'' or ''IRA'' means any trust, account or annuity described in Code section 4975(e)(1)(B) through (F), including, for example, an individual retirement account described in section 408(a) of the Code and a health savings account described in section 223(d) of the Code.

(h) A ''Material Conflict of Interest'' exists when an Adviser or Financial Institution has a financial interest that could affect the exercise of its best judgment as a fiduciary in rendering advice to a Retirement Investor regarding an Asset.

(i) ''Plan'' means any employee benefit plan described in section 3(3) of the Act and any plan described in section 4975(e)(1)(A) of the Code.

(j) ''Proprietary Product'' means a product that is managed by the Financial Institution or any of its Affiliates.

(k) ''Related Entity'' means any entity other than an Affiliate in which the Adviser or Financial Institution has an interest which may affect the exercise of its best judgment as a fiduciary.

(l) ''Retirement Investor'' means—

(1) A participant or beneficiary of a Plan subject to Title I of ERISA with authority to direct the investment of assets in his or her Plan account or to take a distribution,

(2) The beneficial owner of an IRA acting on behalf of the IRA, or

(3) A plan sponsor as described in ERISA section 3(16)(B) (or any employee, officer or director thereof), of a non-participant-directed Plan subject to Title I of ERISA that has fewer than 100 participants, to the extent it acts as a fiduciary with authority to make investment decisions for the Plan.

(m) ''Third-Party Payments'' mean sales charges when not paid directly by the Plan, participant or beneficiary account, or IRA, 12b–1 fees and other payments paid to the Financial Institution or an Affiliate or Related Entity by a third party as a result of the purchase, sale or holding of an Asset by a Plan, participant or beneficiary account, or IRA.

Section IX—Data Request

Upon request by the Department, a Financial Institution that relies on the exemption in Section I shall provide, within a reasonable time, but in no event longer than six (6) months, after receipt of the request, the following information for the preceding six (6) year period:

(a) *Inflows.* At the Financial Institution level, for each Asset purchased, for each quarter:

(1) The aggregate number and identity of shares/units bought;

(2) The aggregate dollar amount invested and the cost to the Plan, participant or beneficiary account, or IRA associated with the purchase;

(3) The revenue received by the Financial Institution and any Affiliate in connection with the purchase of each Asset disaggregated by source; and

(4) The identity of each revenue source (*e.g.,* mutual fund, mutual fund adviser) and the reason the compensation was paid.

(b) *Outflows.* At the Financial Institution level for each Asset sold, for each quarter:

(1) The aggregate number of and identity of shares/units sold;

(2) The aggregate dollar amount received and the cost to the Plan, participant or beneficiary account, or IRA, associated with the sale;

(3) The revenue received by the Financial Institution and any Affiliate in connection with the sale of each Asset disaggregated by source; and

(4) The identity of each revenue source (*e.g.,* mutual fund, mutual fund adviser) and the reason the compensation was paid.

(c) *Holdings.* At the Financial Institution level for each Asset held at any time during each quarter:

(1) The aggregate number and identity of shares/units held at the end of such quarter;

(2) The aggregate cost incurred by the Plan, participant or beneficiary account, or IRA, during such quarter in connection with the holdings;

(3) The revenue received by the Financial Institution and any Affiliate in connection with the holding of each Asset during such quarter for each Asset disaggregated by source; and

(4) The identity of each revenue source (*e.g.,* mutual fund, mutual fund adviser) and the reason the compensation was paid.

(d) *Returns.* At the Retirement Investor level:

(1) The identity of the Adviser;

(2) The beginning-of-quarter value of the Retirement Investor's Portfolio;

(3) The end-of-quarter value of the Retirement Investor's Portfolio; and

(4) Each external cash flow to or from the Retirement Investor's Portfolio during the quarter and the date on which it occurred.

For purposes of this subparagraph (d), ''Portfolio'' means the Retirement Investor's combined holding of assets held in a Plan account or IRA advised by the Adviser.

(e) *Public Disclosure.* The Department reserves the right to publicly disclose information provided by the Financial Institution pursuant to subparagraph (d). If publicly disclosed, such information would be aggregated at the Adviser level, and the Department would not disclose any individually identifiable financial information regarding Retirement Investor accounts.

Signed at Washington, DC, this 14th day of April, 2015.

Phyllis C. Borzi,

Assistant Secretary, Employee Benefits Security Administration, Department of Labor.

APPENDIX I FINANCIAL INSTITUTION ABC—WEB SITE DISCLOSURE MODEL FORM

Type of investment	Provider, name, sub-type	Transactional			Ongoing			Affiliate	Special rules
		Charges to investor	Compensation to firm	Compensation to adviser	Charges to investor	Compensation to firm	Compensation to adviser		
Non-Proprietary Mutual Fund (Load Fund).	XYZ MF Large Cap Fund, Class A Class B Class C.	[•]% sales load as applicable.	[•]% dealer concession.	[•]% of transactional fee Extent considered in annual bonus.	[•]% expense ratio.	[•]% 12b–1 fee, revenue sharing (paid by fund/affiliate).	[•]% of ongoing fees. Extent considered in annual bonus.	N/A	Breakpoints (as applicable) Contingent deferred shares charge (as applicable)
Proprietary Mutual Fund (No load).	ABC MF Large Cap Fund.	No upfront charge.	N/A	N/A	[•]% expense ratio.	[•]% asset-based annual fee for shareholder servicing (paid by fund/affiliate).	[•]% of ongoing fees Extent considered in annual bonus.	[•]% asset-based investment advisory fee paid by fund to affiliate of Financial Institution.	N/A
Equities, ETFs, Fixed Income.	.....	$[•] commission per transaction.	$[•] commission per transaction.	[•]% of commission Extent considered in annual bonus.	N/A	N/A	N/A Extent considered in annual bonus.	N/A	N/A
Annuities (Fixed and Variable).	Insurance Company A.	No upfront charge on amount invested.	$[•] commission (paid by insurer).	[•]% of commission Extent considered in annual bonus.	[•]% M&E fee [•]% underlying expense ratio.	$[•] Ongoing trailing commission (paid by underlying investment providers).	[•]% of ongoing fees Extent considered in annual bonus.	N/A	Surrender charge

APPENDIX II FINANCIAL INSTITUTION XZY—TRANSACTION DISCLOSURE MODEL CHART

	Your investment	Total cost of your investment if held for:		
		1 year	5 years	10 years
Asset 1				
Asset 2				
Asset 3				
Account fees				
Total				

[FR Doc. 2015–08832 Filed 4–15–15; 11:15 am]

BILLING CODE 4510–29–P

DEPARTMENT OF LABOR

Employee Benefits Security Administration

29 CFR Part 2550

[Application Number D–11713]

ZRIN 1210–ZA25

Proposed Class Exemption for Principal Transactions in Certain Debt Securities between Investment Advice Fiduciaries and Employee Benefit Plans and IRAs

AGENCY: Employee Benefits Security Administration (EBSA), U.S. Department of Labor.

ACTION: Notice of Proposed Class Exemption.

SUMMARY: This document contains a notice of pendency before the U.S. Department of Labor of a proposed exemption from certain prohibited transactions provisions of the Employee Retirement Income Security Act of 1974 (ERISA) and the Internal Revenue Code (the Code). The provisions at issue generally prohibit fiduciaries with respect to employee benefit plans and individual retirement accounts (IRAs) from purchasing and selling securities when the fiduciaries are acting on behalf of their own accounts (principal transactions). The exemption proposed in this notice would permit principal transactions in certain debt securities between a plan, plan participant or beneficiary account, or an IRA, and a fiduciary that provides investment advice to the plan or IRA, under conditions to safeguard the interests of these investors. The proposed exemption would affect participants and beneficiaries of plans, IRA owners, and fiduciaries with respect to such plans and IRAs.

DATES: *Comments:* Written comments concerning the proposed class exemption must be received by the Department on or before July 6, 2015.

Applicability: The Department proposes to make this exemption available eight months after publication of the final exemption in the **Federal Register**.

ADDRESSES: All written comments concerning the proposed class exemption should be sent to the Office of Exemption Determinations by any of the following methods, identified by ZRIN: 1210–ZA25:

Federal eRulemaking Portal: http://www.regulations.gov at Docket ID number: EBSA–EBSA–2014–0016. Follow the instructions for submitting comments.

Email to: e-OED@dol.gov.

Fax to: (202) 693–8474.

Mail: Office of Exemption Determinations, Employee Benefits Security Administration, (Attention: D–11713), U.S. Department of Labor, 200 Constitution Avenue NW., Suite 400, Washington, DC 20210.

Hand Delivery/Courier: Office of Exemption Determinations, Employee Benefits Security Administration, (Attention: D–11713), U.S. Department of Labor, 122 C St. NW., Suite 400, Washington, DC 20001.

Instructions. All comments must be received by the end of the comment period. The comments received will be available for public inspection in the Public Disclosure Room of the Employee Benefits Security Administration, U.S. Department of Labor, Room N–1513, 200 Constitution Avenue NW., Washington, DC 20210. Comments will also be available online at *www.regulations.gov,* at Docket ID number: EBSA–2014–0016 and *www.dol.gov/ebsa,* at no charge.

Warning: All comments will be made available to the public. Do not include any personally identifiable information (such as Social Security number, name, address, or other contact information) or confidential business information that you do not want publicly disclosed. All comments may be posted on the Internet and can be retrieved by most Internet search engines.

FOR FURTHER INFORMATION CONTACT: Brian Shiker, Office of Exemption Determinations, Employee Benefits Security Administration, U.S. Department of Labor (202) 693–8824 (not a toll-free number).

SUPPLEMENTARY INFORMATION: The Department is proposing this class exemption on its own motion, pursuant to ERISA section 408(a) and Code section 4975(c)(2), and in accordance with the procedures set forth in 29 CFR part 2570, subpart B (76 FR 66637 (October 27, 2011)).

Public Hearing: The Department plans to hold an administrative hearing within 30 days of the close of the comment period. The Department will ensure ample opportunity for public comment by reopening the record following the hearing and publication of the hearing transcript. Specific information regarding the date, location and submission of requests to testify will be published in a notice in the **Federal Register**.

Executive Summary

Purpose of Regulatory Action

The Department is proposing this exemption in connection with its proposed regulation under ERISA section 3(21)(A)(ii) and Code section 4975(e)(3)(B) (Proposed Regulation), published elsewhere in this issue of the **Federal Register**. The Proposed Regulation specifies when an entity is a fiduciary by reason of the provision of investment advice for a fee or other compensation regarding assets of a plan or IRA. If adopted, the Proposed Regulation would replace an existing regulation that was adopted in 1975. The Proposed Regulation is intended to take into account the advent of 401(k) plans and IRAs, the dramatic increase in rollovers, and other developments that have transformed the retirement plan landscape and the associated investment market over the four decades since the existing regulation was issued. In light of the extensive changes in retirement investment practices and relationships, the Proposed Regulation would update existing rules to distinguish more appropriately between the sorts of advice relationships that should be treated as fiduciary in nature and those that should not.

The exemption proposed in this notice would allow investment advice fiduciaries to engage in purchases and sales of certain debt securities out of their inventory (*i.e.,* engage in principal transactions) with plans, participant or beneficiary accounts, and IRAs, under conditions designed to safeguard the interests of these investors. In the absence of an exemption, these transactions would be prohibited under ERISA and the Code. In this regard, ERISA and the Code generally prohibit fiduciaries with respect to plans and IRAs from purchasing or selling any property to plans, participant or beneficiary accounts, or IRAs. Fiduciaries also may not engage in self-dealing or, under ERISA, act in any transaction involving the plan on behalf of a party whose interests are adverse to the interests of the plan or the interests of its participants and beneficiaries. When a fiduciary sells a security out of its own inventory in a principal transaction, it violates these prohibitions.

ERISA section 408(a) specifically authorizes the Secretary of Labor to grant administrative exemptions from ERISA's prohibited transaction provisions.[1] Regulations at 29 CFR 2570.30 to 2570.52 describe the procedures for applying for an administrative exemption. Before granting an exemption, the Department must find that it is administratively feasible, in the interests of plans and their participants and beneficiaries and IRA owners, and protective of the rights of participants and beneficiaries of such plans and IRA owners. Interested parties are permitted to submit comments to the Department through July 6, 2015. The Department plans to hold an administrative hearing within 30 days of the close of the comment period.

Summary of the Major Provisions

The proposed exemption would allow an individual investment advice fiduciary (an adviser)[2] and the firm that employs or otherwise contracts with the adviser (a financial institution) to engage in principal transactions involving certain debt securities, with plans, participant and beneficiary accounts, and IRAs. The proposed exemption limits the type of debt securities that may be purchased or sold and contains conditions which the adviser and financial institution must satisfy in order to rely on the exemption. To safeguard the interests of plans, participants and beneficiaries, and IRA owners, the exemption would require the adviser and financial institution to contractually acknowledge fiduciary status and commit to adhere to certain ''Impartial Conduct Standards'' when providing investment advice regarding the principal transaction to the plan fiduciary with authority to make investment decisions for the plan, the participant or beneficiary of a plan, or the IRA owner (referred to herein as retirement investors), including providing advice that is in their best interest. The financial institution would further be required to warrant that it has adopted policies and procedures designed to mitigate the impact of material conflicts of interest and ensure that the individual advisers adhere to the Impartial Conduct Standards. The retirement investor would be required to consent to the principal transactions following disclosure of the material conflicts of interest associated with such transactions and of the debt security's pricing information. Financial institutions would be subject to recordkeeping requirements.

Executive Order 12866 and 13563 Statement

Under Executive Orders 12866 and 13563, the Department must determine whether a regulatory action is ''significant'' and therefore subject to the requirements of the Executive Order and subject to review by the Office of Management and Budget (OMB). Executive Orders 13563 and 12866 direct agencies to assess all costs and benefits of available regulatory alternatives and, if regulation is necessary, to select regulatory approaches that maximize net benefits (including potential economic, environmental, public health and safety effects, distributive impacts, and equity). Executive Order 13563 emphasizes the importance of quantifying both costs and benefits, of reducing costs, of harmonizing and streamlining rules, and of promoting flexibility. It also requires federal

[1] Code section 4975(c)(2) authorizes the Secretary of the Treasury to grant exemptions from the parallel prohibited transaction provisions of the Code. Reorganization Plan No. 4 of 1978 (5 U.S.C. app. at 214 (2000)) generally transferred the authority of the Secretary of the Treasury to grant administrative exemptions under Code section 4975 to the Secretary of Labor. This proposed exemption would provide relief from the indicated prohibited transaction provisions of both ERISA and the Code.

[2] By using the term ''adviser,'' the Department does not intend to limit the exemption to investment advisers registered under the Investment Advisers Act of 1940 or under state law. As explained herein, an adviser must be an investment advice fiduciary of a plan or IRA who is an employee, independent contractor, agent, or registered representative of a registered investment adviser, bank, or registered broker-dealer.

agencies to develop a plan under which the agencies will periodically review their existing significant regulations to make the agencies' regulatory programs more effective or less burdensome in achieving their regulatory objectives.

Under Executive Order 12866, ''significant'' regulatory actions are subject to the requirements of the Executive Order and review by the Office of Management and Budget (OMB). Section 3(f) of Executive Order 12866, defines a ''significant regulatory action'' as an action that is likely to result in a rule (1) having an annual effect on the economy of $100 million or more, or adversely and materially affecting a sector of the economy, productivity, competition, jobs, the environment, public health or safety, or State, local or tribal governments or communities (also referred to as ''economically significant'' regulatory actions); (2) creating serious inconsistency or otherwise interfering with an action taken or planned by another agency; (3) materially altering the budgetary impacts of entitlement grants, user fees, or loan programs or the rights and obligations of recipients thereof; or (4) raising novel legal or policy issues arising out of legal mandates, the President's priorities, or the principles set forth in the Executive Order. Pursuant to the terms of the Executive Order, OMB has determined that this action is ''significant'' within the meaning of Section 3(f)(4) of the Executive Order. Accordingly, the Department has undertaken an assessment of the costs and benefits of the proposed amendment, and OMB has reviewed this regulatory action.

Background

Proposed Regulation Defining a Fiduciary

As explained more fully in the preamble to Department's Proposed Regulation under ERISA section 3(21)(A)(ii) and Code section 4975(e)(3)(B), also published in this issue of the **Federal Register**, ERISA is a comprehensive statute designed to protect the interests of plan participants and beneficiaries, the integrity of employee benefit plans, and the security of retirement, health, and other critical benefits. The broad public interest in ERISA-covered plans is reflected in its imposition of stringent fiduciary responsibilities on parties engaging in important plan activities, as well as in the tax-favored status of plan assets and investments. One of the chief ways in which ERISA protects employee benefit plans is by requiring that plan fiduciaries comply with fundamental obligations rooted in the law of trusts. In particular, plan fiduciaries must manage plan assets prudently and with undivided loyalty to the plans and their participants and beneficiaries.[3] In addition, they must refrain from engaging in ''prohibited transactions,'' which ERISA forbids because of the dangers posed by the fiduciaries' conflicts of interest with respect to the transactions.[4] When fiduciaries violate ERISA's fiduciary duties or the prohibited transaction rules, they may be held personally liable for the breach.[5] In addition, violations of the prohibited transaction rules are subject to excise taxes under the Code.

The Code also has rules regarding fiduciary conduct with respect to tax-favored accounts that are not generally covered by ERISA, such as IRAs. Although ERISA's general fiduciary obligations of prudence and loyalty do not govern the fiduciaries of IRAs, these fiduciaries are subject to the prohibited transaction rules. In this context fiduciaries engaging in the prohibited transactions are subject to an excise tax enforced by the Internal Revenue Service. Unlike participants in plans covered by Title I of ERISA, under the Code, IRA owners cannot bring suit against fiduciaries under ERISA for violation of the prohibited transaction rules and fiduciaries are not personally liable to IRA owners for the losses caused by their misconduct, nor can the Secretary of Labor bring suit to enforce the prohibited transaction rules. The exemption proposed herein, as well as another exemption for the receipt of compensation by investment advice fiduciaries published elsewhere in this issue of the **Federal Register**, would create contractual obligations for the adviser to adhere to certain standards (the Impartial Conduct Standards). IRA owners would have a right to enforce these new contractual rights.

Under this statutory framework, the determination of who is a ''fiduciary'' is of central importance. Many of ERISA's protections, duties, and liabilities hinge on fiduciary status. In relevant part, section 3(21)(A) of ERISA and section 4975(e)(3) of the Code provide that a person is a fiduciary with respect to a plan or IRA to the extent he or she (1) exercises any discretionary authority or discretionary control with respect to management of such plan or IRA, or exercises any authority or control with respect to management or disposition of its assets; (2) renders investment advice for a fee or other compensation, direct or indirect, with respect to any moneys or other property of such plan or IRA, or has any authority or responsibility to do so; or, (3) has any discretionary authority or discretionary responsibility in the administration of such plan or IRA.

The statutory definition deliberately casts a wide net in assigning fiduciary responsibility with respect to plan and IRA assets. Thus, ''any authority or control'' over plan or IRA assets is sufficient to confer fiduciary status, and any persons who render ''investment advice for a fee or other compensation, direct or indirect'' are fiduciaries, regardless of whether they have direct control over the plan's or IRA's assets and regardless of their status as an investment adviser or broker under the federal securities laws. The statutory definition and associated fiduciary responsibilities were enacted to ensure that plans and IRAs can depend on persons who provide investment advice for a fee to provide recommendations that are untainted by conflicts of interest. In the absence of fiduciary status, the providers of investment advice would neither be subject to ERISA's fundamental fiduciary standards, nor accountable for imprudent, disloyal, or tainted advice under ERISA or the Code, no matter how egregious the misconduct or how substantial the losses. Plans, individual participants and beneficiaries, and IRA owners often are not financial experts and consequently must rely on professional advice to make critical investment decisions. In the years since then, the significance of financial advice has become still greater with increased reliance on participant-directed plans and IRAs for the provision of retirement benefits.

In 1975, the Department issued a regulation, at 29 CFR 2510.3–21(c)(1975) defining the circumstances under which a person is treated as providing ''investment advice'' to an employee benefit plan within the meaning of section 3(21)(A)(ii) of ERISA (the ''1975 regulation'').[6] The regulation narrowed the scope of the statutory definition of fiduciary investment advice by creating a five-part test that must be satisfied before a person can be treated as rendering investment advice for a fee. Under the regulation, for advice to constitute ''investment advice,'' an adviser who does not have discretionary authority or control with

[3] ERISA section 404(a).

[4] ERISA section 406. ERISA also prohibits certain transactions between a plan and a ''party in interest.''

[5] ERISA section 409; *see also* ERISA section 405.

[6] The Department of Treasury issued a virtually identical regulation, at 26 CFR 54.4975–9(c), which interprets Code section 4975(e)(3).

respect to the purchase or sale of securities or other property of the plan must—(1) render advice as to the value of securities or other property, or make recommendations as to the advisability of investing in, purchasing or selling securities or other property (2) on a regular basis (3) pursuant to a mutual agreement, arrangement or understanding, with the plan or a plan fiduciary that (4) the advice will serve as a primary basis for investment decisions with respect to plan assets, and that (5) the advice will be individualized based on the particular needs of the plan. The regulation provides that an adviser is a fiduciary with respect to any particular instance of advice only if he or she meets each and every element of the five-part test with respect to the particular advice recipient or plan at issue. A 1976 Department of Labor Advisory Opinion further limited the application of the statutory definition of ''investment advice'' by stating that valuations of employer securities in connection with employee stock ownership plan (ESOP) purchases would not be considered fiduciary advice.[7]

As the marketplace for financial services has developed in the years since 1975, the five-part test may now undermine, rather than promote, the statutes' text and purposes. The narrowness of the 1975 regulation allows professional advisers, consultants and valuation firms to play a central role in shaping plan investments, without ensuring the accountability that Congress intended for persons having such influence and responsibility when it enacted ERISA and the related Code provisions. Even when plan sponsors, participants, beneficiaries and IRA owners clearly rely on paid consultants for impartial guidance, the regulation allows consultants to avoid fiduciary status and disregard the accompanying obligations of care and prohibitions on disloyal and conflicted transactions. As a consequence, these advisers can steer customers to investments based on their own self-interest, give imprudent advice, and engage in transactions that would otherwise be categorically prohibited by ERISA and the Code without liability under ERISA or the Code.

In the Proposed Regulation, the Department seeks to replace the existing regulation with one that more appropriately distinguishes between the sorts of advice relationships that should be treated as fiduciary in nature and those that should not, in light of the legal framework and financial marketplace in which plans and IRAs currently operate.[8] The Proposed Regulation describes the types of advice that constitutes ''investment advice'' with respect to plan or IRA assets for purposes of the definition of a fiduciary at ERISA section 3(21)(A)(ii) and Code section 4975(e)(3)(B). The proposal provides, subject to certain carve-outs, that a person renders investment advice with respect to a plan or IRA if, among other things, the person provides, directly to a plan, a plan fiduciary, a plan participant or beneficiary, IRA or IRA owner one of the following types of advice:

(1) A recommendation as to the advisability of acquiring, holding, disposing or exchanging securities or other property, including a recommendation to take a distribution of benefits or a recommendation as to the investment of securities or other property to be rolled over or otherwise distributed from a plan or IRA;

(2) A recommendation as to the management of securities or other property, including recommendations as to the management of securities or other property to be rolled over or otherwise distributed from the plan or IRA;

(3) An appraisal, fairness opinion or similar statement, whether verbal or written, concerning the value of securities or other property, if provided in connection with a specific transaction or transactions involving the acquisition, disposition or exchange of such securities or other property by the plan or IRA; and

(4) A recommendation of a person who is also going to receive a fee or other compensation for providing any of the types of advice described in paragraphs (1) through (3), above.

In addition, to be a fiduciary, such person must either (1) represent or acknowledge that it is acting as a fiduciary within the meaning of ERISA (or the Code) with respect to the advice, or (2) render the advice pursuant to a written or verbal agreement, arrangement or understanding that the advice is individualized to, or that such advice is specifically directed to, the advice recipient for consideration in making investment or management decisions with respect to securities or other property of the plan or IRA.

In the Proposed Regulation, the Department refers to FINRA guidance on whether particular communications should be viewed as ''recommendations''[9] within the meaning of the fiduciary definition, and requests comment on whether the Proposed Regulation should adhere to or adopt some or all of the standards developed by FINRA in defining communications which rise to the level of a recommendation. For more detailed information regarding the Proposed Regulation, see the Notice of the Proposed Regulation published in this issue of the **Federal Register**.

For advisers who do not represent that they are acting as ERISA (or Code) fiduciaries, the Proposed Regulation provides that advice rendered in conformance with certain carve-outs will not cause the adviser to be treated as a fiduciary under ERISA or the Code. For example, under the seller's carve-out, counterparties in arm's-length transactions with plans may make investment recommendations without acting as fiduciaries if certain conditions are met.[10] Similarly, the proposal contains a carve-out from fiduciary status for providers of appraisals, fairness opinions, or statements of value in specified contexts (*e.g.,* with respect to ESOP transactions). The proposal additionally carves out from fiduciary status the marketing of investment alternative platforms to plans, certain assistance in selecting investment alternatives, and other activities. Finally, the Proposed Regulation contains a carve-out from fiduciary status for the provision of investment education.

Prohibited Transactions

The Department anticipates that the Proposed Regulation will cover many investment professionals who do not currently consider themselves to be fiduciaries under ERISA or the Code. If the Proposed Regulation is adopted, these entities will become subject to the prohibited transaction restrictions in ERISA and the Code that apply specifically to fiduciaries. ERISA section 406(b)(1) and Code section 4975(c)(1)(E) prohibit a fiduciary from dealing with the income or assets of a plan or IRA in his own interest or his own account. ERISA section 406(b)(2)

[7] Advisory Opinion 76–65A (June 7, 1976).

[8] The Department initially proposed an amendment to its regulation under ERISA section 3(21)(A)(ii) and Code section 4975(e)(3)(B) on October 22, 2010, at 75 FR 65263. It subsequently announced its intention to withdraw the proposal and propose a new rule, consistent with the President's Executive Orders 12866 and 13563, in order to give the public a full opportunity to evaluate and comment on the new proposal and updated economic analysis.

[9] *See* NASD Notice to Members 01–23 and FINRA Regulatory Notices 11–02, 12–25 and 12–55.

[10] Although the preamble adopts the phrase ''seller's carve-out'' as a shorthand way of referring to the carve-out and its terms, the regulatory carve-out is not limited to sellers but rather applies more broadly to counterparties in arm's length transactions with plan investors with financial expertise.

provides that a fiduciary shall not ''in his individual or in any other capacity act in any transaction involving the plan on behalf of a party (or represent a party) whose interests are adverse to the interests of the plan or the interests of its participants or beneficiaries.'' [11] ERISA section 406(b)(3) and Code section 4975(c)(1)(F) prohibit a fiduciary from receiving any consideration for his own personal account from any party dealing with the plan in connection with a transaction involving assets of the plan or IRA. Parallel regulations issued by the Departments of Labor and the Treasury explain that these provisions impose on fiduciaries of plans and IRAs a duty not to act on conflicts of interest that may affect the fiduciary's best judgment on behalf of the plan or IRA. Given these prohibitions, conferring fiduciary status on particular investment advice activities will have important implications for many investment professionals.

The purchase or sale of a security in a principal transaction between a plan or IRA and a fiduciary, resulting from the fiduciary's provision of investment advice, raises issues under ERISA section 406(b) and Code section 4975(c)(1)(E).[12] Nevertheless, the Department recognizes that certain investment advice fiduciaries view the ability to execute principal transactions as integral to the economically efficient distribution of fixed income securities. The Department has carefully considered requests for exemptive relief for principal transactions in connection with the development of the Proposed Regulation, in light of the existing legal framework. In this regard, as further discussed below, fiduciaries who engage in principal transactions under certain circumstances can avoid the ERISA and Code restrictions. Moreover, there are existing statutory and administrative exemptions, also discussed below, that already provide prohibited transaction relief for fiduciaries engaging in principal transactions with plans and IRAs. This notice proposes a new class exemption which would provide additional prohibited transaction relief for investment advice fiduciaries to engage in principal transactions with plans and IRAs.

1. Blind Transactions

Certain principal transactions between a plan or IRA and an investment advice fiduciary may not need exemptive relief because they are blind transactions executed on an exchange. The ERISA Conference Report states that a transaction will, generally, not be a prohibited transaction if the transaction is an ordinary ''blind'' purchase or sale of securities through an exchange where neither the buyer nor the seller (nor the agent of either) knows the identity of the other party involved.[13]

2. Principal Transactions Permitted Under an Exemption

ERISA and the Code counterbalance the broad proscriptive effect of the prohibited transaction provisions with numerous statutory exemptions. ERISA and the Code also provide for administrative exemptions that the Secretary of Labor may grant on an individual or class basis if the Secretary finds that the exemption is (1) administratively feasible, (2) in the interests of plans and their participants and beneficiaries, and (3) protective of the rights of the participants and beneficiaries of such plans.

A. Statutory Exemptions

ERISA section 408(b)(14) provides a statutory exemption for transactions entered into in connection with the provision of fiduciary investment advice to a participant or beneficiary of an individual account plan or an IRA owner. The exemption provides relief for, among other things, the acquisition, holding, or sale of a security or other property as an investment under the plan pursuant to the investment advice. As set forth in ERISA section 408(g), the exemption is available if the advice is provided under an ''eligible investment advice arrangement'' which either (1) ''provides that any fees (including any commission or other compensation) received by the fiduciary adviser for investment advice or with respect to the sale, holding or acquisition of any security or other property for purposes of investment of plan assets do not vary depending on the basis of any investment option selected'' or (2) ''uses a computer model under an investment advice program meeting the requirements of [ERISA section 408(g)(3)].'' Additional conditions apply. Code section 4975(d)(17) provides the same relief from the taxes imposed by Code section 4975(a) and (b).

ERISA section 408(b)(16) provides relief for transactions involving the purchase or sale of securities between a plan and a party in interest, including an investment advice fiduciary, if the transactions are executed through an electronic communication network, alternative trading system, or similar execution system or trading venue. Among other conditions, subparagraph (B) of the statutory exemption requires that either: (i) ''the transaction is effected pursuant to rules designed to match purchases and sales at the best price available through the execution system in accordance with applicable rules of the Securities and Exchange Commission or other relevant governmental authority,'' or (ii) ''neither the execution system nor the parties to the transaction take into account the identity of the parties in the execution of trades[.]'' The transactions covered by ERISA section 408(b)(16) include principal transactions between a plan and an investment advice fiduciary. Code section 4975(d)(19) provides the same relief from the taxes imposed by Code section 4975(a) and (b).

B. Administrative Exemptions

An administrative exemption for certain principal transactions will continue to be available through PTE 75–1.[14] Specifically, PTE 75–1, Part IV, provides an exemption that is available to investment advice fiduciaries who are ''market-makers.'' Relief is available from ERISA section 406 for the purchase or sale of securities by a plan or IRA, from or to a market-maker with respect to such securities who is also an investment advice fiduciary with respect to the plan or IRA, or an affiliate of such fiduciary.

Further, Part II(1) of PTE 75–1 currently provides relief from ERISA section 406(a) and Code section 4975(c)(1)(A) through (D) for the purchase or sale of a security in a principal transaction between a plan or IRA and a broker-dealer registered under the Securities Exchange Act of 1934. However, the exemption permits plans and IRAs to engage in principal transactions with broker-dealers only if they do not have or exercise any discretionary authority or control (except as a directed trustee) with respect to the investment of plan or IRA assets involved in the transaction, and *do not render investment advice (within the meaning of 29 CFR 2510.3–21(c)) with respect to the investment of those assets.* PTE 75–1, Part II(1) will continue to be available to parties in interest that are not fiduciaries and that satisfy its conditions.

[11] The Code does not contain this prohibition.

[12] The purchase or sale of a security in a principal transaction between a plan or IRA and a fiduciary also is prohibited by ERISA section 406(a)(1)(A) and (D) and Code section 4975(c)(1)(A) and (D).

[13] *See* H.R. Rep. 93–1280, 93rd Cong., 2d Sess. 307 (1974); *see also* ERISA Advisory Opinion 2004–05A (May 24, 2004).

[14] 40 FR 50845 (Oct. 31, 1975), as amended, 71 FR 5883 (Feb. 3, 2006).

C. New Exemption Proposed in This Notice

In response to public concerns, the Department is proposing in this notice additional relief for principal transactions in certain debt securities between a plan, participant or beneficiary account, or an IRA, and an investment advice fiduciary. While relief was informally requested with respect to a broad range of principal transactions (*e.g.,* those involving equities, debt securities, futures, derivatives, currencies, *etc.*), the Department has elected to propose relief solely with respect to certain widely-held debt securities. This limitation is based on the Department's view that principal transactions involve a potentially severe conflict of interest when engaged in by a fiduciary with respect to a plan, participant or beneficiary account, or an IRA. The Department is concerned that, when acting as a principal in a transaction involving a plan, participant or beneficiary account, or an IRA, a fiduciary may have difficulty reconciling its duty to avoid conflicts of interest with its concern for its own financial interests. Of primary concern are issues involving liquidity, pricing, transparency, and the fiduciary's possible incentive to ''dump'' unwanted assets. Accordingly, when crafting the exemption, the Department focused on debt securities as common investments of plans, participant or beneficiary accounts, and IRAs that may need to be sold on a principal basis because particular bond issues may be sold by only one or a limited number of financial institutions. Without an exemption, plans, participant or beneficiary accounts, and IRAs may face reduced choice in the market for these debt securities.

Under this rationale, however, the Department is not persuaded at this point that additional exemptive relief for principal transactions involving other types of assets would be in the interests of, and protective of, plans, their participants and beneficiaries and IRA owners. Equity securities, for example, are widely available through agency transactions that do not involve the particular conflicts of interest associated with principal transactions. Other assets such as futures, derivatives and currencies, may possess a level of complexity and risk that would require a retirement investor to rely heavily on a fiduciary's advice. In such cases, the Department is concerned that the class exemption proposed here would be insufficiently protective of plans, participants and beneficiaries, and IRA owners.

The Department requests comment on the limitation of the proposed exemption to debt securities. Public input is requested on whether there are additional assets that are commonly held by plans, participant or beneficiary accounts, and IRAs that are sold primarily in principal transactions. Commenters should provide specifics about the characteristics of such assets and the proposed safeguards that would apply to an exemption permitting their sale in a principal transaction. To the extent interested parties believe it is possible or appropriate to provide relief for additional transactions, the Department would also invite applications for additional exemptions tailored to the unique characteristics of those transactions and protective of the interests of plan participants and IRA owners.

Proposed Exemption for Principal Transactions in Certain Debt Securities

Section I of the proposed exemption would provide relief for ''Advisers'' and ''Financial Institutions'' to enter into ''principal transactions'' in ''debt securities'' with plans and IRAs. The proposed exemption uses the term ''Retirement Investor'' to describe the types of persons who can be investment advice recipients under the exemption, and the term ''Affiliate'' to describe people and entities with a connection to the Adviser or Financial Institution. These terms are defined in Section VI of this proposed exemption. The following sections discuss key definitional terms of the exemption as well as the scope and conditions of the proposed exemption.

Defined Terms

1. Adviser

The proposed exemption contemplates that an individual person, an Adviser, will provide advice to the Retirement Investor. An Adviser must be an investment advice fiduciary of a plan or IRA who is an employee, independent contractor, agent, or registered representative of a ''Financial Institution'' (discussed in the next section), and the Adviser must satisfy the applicable banking and securities laws with respect to the covered transaction.[15] Advisers may be, for example, registered representatives of broker-dealers registered under the Securities Exchange Act of 1934.

2. Financial Institutions

For purposes of the proposed exemption, a Financial Institution is the entity that employs an Adviser or otherwise retains the Adviser as an independent contractor, agent or registered representative.[16] Financial Institutions must be registered investment advisers, banks, or registered broker-dealers. This limitation is based on the Department's understanding that these entities may commonly sell debt securities out of inventory. The Department requests comment on whether there are other types of financial institutions that should be included in the definition.

3. Affiliates

The proposed exemption uses the term Affiliate to describe persons or entities with certain relationships to the Adviser and Financial Institution. An ''Affiliate'' means: (1) any person directly or indirectly, through one or more intermediaries, controlling, controlled by, or under common control with the Adviser or Financial Institution; (2) any officer, director, employee, relative (as defined in ERISA section 3(15)) or member of family (as defined in Code section 4975(e)(6)), agent or registered representative of, or partner in such Adviser or Financial Institution; and (3) any corporation or partnership of which the Adviser or Financial Institution is an officer, director, or employee, or in which the Adviser or Financial Institution is a partner. For purposes of this definition, the term ''control'' means the power to exercise a controlling influence over the management or policies of a person other than an individual.

4. Retirement Investor

The proposed exemption uses the term ''Retirement Investor,'' to mean a plan fiduciary of a non-participant directed ERISA plan with authority to make investment decisions for the plan, a plan participant or beneficiary with authority to direct the investment of assets in his or her plan account or to take a distribution, or, in the case of an IRA, the beneficial owner of the IRA (*i.e.,* the IRA owner).

5. Principal Transaction

For purposes of the proposed exemption, a principal transaction is a purchase or sale of a debt security where an Adviser or Financial Institution is purchasing from or selling to the plan, participant or beneficiary account, or IRA on behalf of the account of the Financial Institution or the

[15] *See* Section VI(a) of the proposed exemption.

[16] *See* Section VI(f) of the proposed exemption.

account of any person directly or indirectly, through one or more intermediaries, controlling, controlled by, or under common control with the Financial Institution. The Department requests comment as to whether, and on what grounds, relief is also necessary for the purchase or sale of a debt security from the Adviser's own account in addition to the Financial Institution's own account.

6. Debt Securities

The proposed exemption is limited to principal transactions in certain debt securities. For purposes of the exemption, the term ''debt security,'' is defined by reference to Rule 10b–10(d)(4) under the Securities Exchange Act of 1934. The categories of covered debt securities include securities that are (1) dollar denominated, issued by a U.S. corporation and offered pursuant to a registration statement under the Securities Act of 1933; (2) U.S. agency debt securities (as defined in FINRA Rule 6710(l)); and (3) U.S. Treasury securities (as defined in FINRA Rule 6710(p)).

The debt security may not have been issued by the Financial Institution or any Affiliate. Additionally, the debt security may not be purchased by the plan, participant or beneficiary account, or IRA, in an underwriting or underwriting syndicate in which the Financial Institution or any Affiliate is the underwriter or a member. Purchases by plans, participant or beneficiary accounts, or IRAs may occur, however, if a debt security originally underwritten by the Financial Institution or an Affiliate was later obtained for sale in the secondary market.

The debt security must also possess no greater than moderate credit risk and be sufficiently liquid that the debt security could be sold at or near its fair market value within a reasonably short period of time. Debt securities subject to a moderate credit risk should possess at least average credit-worthiness relative to other similar debt issues. Moderate credit risk would denote current low expectations of default risk, with an adequate capacity for payment of principal and interest. These securities have a level of creditworthiness similar to investment grade securities.[17]

[17] The U.S. Securities and Exchange Commission has similarly referred to securities that are 'subject to no greater than moderate credit risk' and sufficiently liquid that [the security] can be sold at or near its carrying value within a reasonably short period of time'' in setting standards of creditworthiness in its regulations. *See, e.g.,* Rule 6a–5 issued under Investment Company Act,17 CFR 270.6a–5 (77 FR 70117, November 23, 2012).

Scope of Relief in the Proposed Exemption

The proposed exemption provides relief for principal transactions in debt securities between a plan, participant or beneficiary account, or IRA and a Financial Institution or an entity in a control relationship with the Financial Institution, when the principal transaction is a result of the Adviser's and Financial Institution's provision of investment advice. Relief is proposed from ERISA sections 406(a)(1)(A) and (D), and 406(b)(1) and (2), and the taxes imposed by Code section 4975(a) and (b), by reason of Code section 4975(c)(1)(A), (D) and (E). Relief has not been proposed in this exemption from ERISA section 406(b)(3) and Code section 4975(c)(1)(F), which prohibit a plan fiduciary from receiving any consideration for its own personal account from any party dealing with the plan in connection with a transaction involving the assets of the plan. As a result, the proposed exemption does not include relief for the receipt by a fiduciary of consideration from a trading venue in connection with the execution of purchases and sales thereon (*e.g.,* payment for order flow).

Several limitations apply to the scope of the proposed exemption. First, relief is limited to Advisers whose fiduciary authority with respect to the plan, participant or beneficiary account, or IRA assets involved in the transaction is as a provider of investment advice.[18] Advisers who have full investment discretion with respect to the assets of a plan, participant or beneficiary account, or IRA or who have discretionary authority over the administration of the plan, participant or beneficiary account, or IRA, for example, may not take advantage of relief under the exemption.

Second, the exemption is not available to a transaction involving a plan covered by Title I of ERISA if the Adviser or Financial Institution, or any Affiliate is the employer of employees covered by the plan which is the recipient of the advice.[19] This restriction on employers does not apply in the case of an IRA or other similar plan that is not covered by Title I of ERISA. Accordingly, an Adviser or Financial Institution may provide advice to the beneficial owner of an IRA who is employed by the Adviser, its Financial Institution or an Affiliate, and receive compensation as a result, provided the IRA is not covered by Title I of ERISA.

[18] *See* Section I(c)(1) of the proposed exemption.

[19] *See* Section I(c)(2) of the proposed exemption.

Finally, the exemption does not apply if the Adviser or Financial Institution is a named fiduciary or plan administrator, as defined in ERISA section 3(16)(A) with respect to an ERISA plan, or an affiliate thereof, that was selected to provide advice to the plan by a fiduciary who is not independent of them.[20] This provision is intended to disallow selection of Advisers and Financial Institutions by named fiduciaries or plan administrators that have an interest in them.

Conditions of the Proposed Exemption

Sections II–V of the proposal set forth the conditions of the exemption. All applicable conditions must be satisfied in order to avoid application of the specified prohibited transaction provisions of ERISA and the Code. The Department believes that these conditions are necessary for the Secretary to find that the exemption is administratively feasible, in the interests of plans, their participants and beneficiaries and IRA owners, and protective of the rights of the participants and beneficiaries of such plans and IRA owners. Under ERISA section 408(a)(2), and Code section 4975(c)(2), the Secretary may not grant an exemption without making such findings. The proposed conditions are described below.

Contractual Obligations (Section II)

Section II(a) of the proposal requires that an Adviser and the Financial Institution enter into a written contract with the Retirement Investor prior to engaging in a principal transaction with a plan, participant or beneficiary account, or IRA. The contract must be executed by the Adviser and Financial Institution as well as the Retirement Investor, acting on behalf of the plan, participant or beneficiary account, or IRA. In the case of advice provided to a participant or beneficiary in a plan, the participant or beneficiary should be the Retirement Investor that is the party to the contract, on behalf of his or her individual account.

The contract may be part of a master agreement with the Retirement Investor and does not require execution prior to each additional principal transaction. The exemption does not, by its terms, mandate an ongoing or long-term advisory relationship, but rather leaves that to the parties. The terms of the contract, along with other representations, agreements, or understandings between the Adviser, Financial Institution and Retirement

[20] *See* Section VI(f), defining the term ''Independent.''

Investor, will govern the ongoing or transactional nature of the relationship between the parties.

The contract is the cornerstone of the proposed exemption, and the Department believes that by requiring a contract as a condition of the proposed exemption, it creates a mechanism by which a Retirement Investor can be alerted to the Adviser's and Financial Institution's obligations and be provided with a basis upon which its rights can be enforced. In order to comply with the exemption, the contract must contain every required element set forth in Section II(b)–(e) and also must not include any of the prohibited provisions described in Section II(f). It is intended that the contract creates actionable obligations with respect to both the Impartial Conduct Standards and the warranties, described below. In addition, failure to satisfy the Independent Conduct Standards will result in loss of the exemption.

1. Fiduciary Status

The proposal sets forth multiple contractual requirements. The first and most fundamental contractual requirement, which is set out in Section II(b) of proposal, is that both the Adviser and Financial Institution must acknowledge fiduciary status under ERISA or the Code, or both, with respect to the investment recommendations to the Retirement Investor regarding principal transactions. If this acknowledgment of fiduciary status does not appear in a contract with a Retirement Investor, the exemption is not satisfied with respect to principal transactions involving that Retirement Investor. This fiduciary acknowledgment is critical to ensuring that there is no uncertainty—before or after investment advice is given with regard to the principal transaction—that both the Adviser and Financial Institution are acting as fiduciaries under ERISA and the Code. Nevertheless, it is important to note that the contractual language is only required to apply to communications that are investment recommendations to the Retirement Investor regarding principal transactions. Compliance with all the exemption's conditions is necessary only with respect to transactions that otherwise would constitute prohibited transactions under ERISA and the Code.

2. Standards of Impartial Conduct

Building upon the required acknowledgment of fiduciary status, the proposal additionally requires that both the Adviser and the Financial Institution contractually commit to adhering to specifically delineated Impartial Conduct Standards when providing investment advice to the Retirement Investor regarding principal transactions, and that they in fact do adhere to such standards. Therefore, if an Adviser and/or Financial Institution fail to comply with the Impartial Conduct Standards, relief under the exemption is no longer available and the contract is violated.

Specifically, Section II(c)(1) of the proposal requires that under the contract the Adviser and Financial Institution provide advice regarding principal transactions that is in the ''best interest'' of the Retirement Investor. Best interest is defined to mean that the Adviser and Financial Institution act with the care, skill, prudence, and diligence under the circumstances then prevailing that a prudent person would exercise based on the investment objectives, risk tolerance, financial circumstances, and the needs of the Retirement Investor when providing investment advice to the Retirement Investor. Further, under the best interest standard, the Adviser and Financial Institution must act without regard to the financial or other interests of the Adviser, Financial Institution, their Affiliates or any other party. Under this standard, the Adviser and Financial Institution must put the interests of the Retirement Investor ahead of the financial interests of the Adviser, Financial Institution, their Affiliates or any other party.

The best interest standard set forth in this exemption is based on longstanding concepts derived from ERISA and the law of trusts. For example, ERISA section 404 requires a fiduciary to act ''solely in the interest of the participants . . . with the care, skill, prudence, and diligence under the circumstances then prevailing that a prudent man acting in a like capacity and familiar with such matters would use in the conduct of an enterprise of a like character and with like aims.'' Similarly, both ERISA section 404(a)(1)(A) and the trust-law duty of loyalty require fiduciaries to put the interests of trust beneficiaries first, without regard to the fiduciaries' own self-interest. Accordingly, the Department would expect the standard to be interpreted in light of forty years of judicial experience with ERISA's fiduciary standards and hundreds more with the duties imposed on trustees under the common law of trusts. In general, courts focus on the process the fiduciary used to reach its determination or recommendation—whether the fiduciaries, ''at the time they engaged in the challenged transactions, employed the proper procedures to investigate the merits of the investment and to structure the investment.'' *Donovan* v. *Mazzola,* 716 F.2d 1226, 1232 (9th Cir. 1983). Moreover, a fiduciary's investment recommendation is measured based on the circumstances prevailing at the time of the transaction, not on how the investment turned out with the benefit of hindsight.

In this regard, the Department notes that while fiduciaries of plans covered by ERISA are subject to the ERISA section 404 standards of prudence and loyalty, the Code contains no provisions that hold IRA fiduciaries to these standards. However, as a condition of relief under the proposed exemption, both IRA and plan fiduciaries would have to agree to, and uphold, the best interest requirement that is set forth in Section II(c). The best interest standard is defined to effectively mirror the ERISA section 404 duties of prudence and loyalty, as applied in the context of fiduciary investment advice.

The Impartial Conduct Standards continue in Section II(c) of the proposal. Section II(c)(2) requires that the Adviser and Financial Institution agree that they will not enter into a principal transaction with the plan, participant or beneficiary account, or IRA if the purchase or sales price of the debt security (including the mark-up or mark-down) is unreasonable under the circumstances. Finally, Section II(c)(3) requires that the Adviser's and Financial Institution's statements about the debt security, fees, material conflicts of interest, and any other matters relevant to a Retirement Investor's investment decisions, are not misleading.

Under ERISA section 408(a) and Code section 4975(c), the Department cannot grant an exemption unless it first finds that the exemption is administratively feasible, in the interests of plans and their participants and beneficiaries and IRA owners, and protective of the rights of participants and beneficiaries of plans and IRA owners. An exemption permitting transactions that violate the requirements of Section II(c) would be unlikely to meet these standards.

3. Warranty—Compliance With Applicable Law

Section II(d) of the proposal requires that contract include certain warranties intended to be protective of the rights of Retirement Investors. In particular, to satisfy the exemption, the Adviser, and Financial Institution must warrant that they and their Affiliates will comply with all applicable federal and state laws regarding the rendering of the investment advice and the purchase and

sale of debt securities. This warranty must be in the contract but the exemption is not conditioned on compliance with the warranty. Accordingly, the failure to comply with applicable federal or state law could result in contractual liability for breach of warranty, but it would not result in loss of the exemption, as long as the breach did not involve a violation of one of the exemption's other conditions (*e.g.,* the best interest standard). Thus, for example, de minimis violations of state or federal law would not result in the loss of the exemption.

4. Warranty—Policies and Procedures

The Financial Institution must also contractually warrant that it has adopted written policies and procedures that are reasonably designed to mitigate the impact of material conflicts of interest that exist with respect to the provision of investment advice to Retirement Investors regarding principal transactions and ensure that individual Advisers adhere to the Impartial Conduct Standards described above. For purposes of the exemption, a material conflict of interest is deemed to exist when an Adviser or Financial Institution has a financial interest that could affect the exercise of its best judgment as a fiduciary in rendering advice to a Retirement Investor.[21] Like the warranty on compliance with applicable law, discussed above, this warranty must be in the contract but the exemption is not conditioned on compliance with the warranty. Failure to comply with the warranty, however, could result in contractual liability for breach of warranty.

As part of the contractual warranty on policies and procedures, the Financial Institution must state that in formulating its policies and procedures, it specifically identified material conflict of interests and adopted measures to prevent those material conflicts of interest from causing violations of the Impartial Conduct Standards. Further, the Financial Institution must state that neither it nor (to the best of its knowledge) its Affiliates will use quotas, appraisals, performance or personnel actions, bonuses, contests, special awards, differentiated compensation or other actions or incentives to the extent they would tend to encourage individual Advisers to make recommendations regarding principal transactions that are not in the best interest of Retirement Investors.

While these warranties must be part of the contract between the Adviser and Financial Institution and the Retirement Investor, the proposal does not mandate the specific content of the policies and procedures. This flexibility is intended to allow Financial Institutions to develop policies and procedures that are effective for their particular business models, within the constraints of their fiduciary obligations and the Impartial Conduct Standards. A more detailed description of the policies and procedures requirement is included in the discussion of the similar requirement in the Proposed Exemption for the Receipt of Compensation by Investment Advice Fiduciaries, published in this same issue of the **Federal Register**.

5. Contractual Disclosures

Finally, Section II(e) of the proposal requires certain disclosures in the written contract. If the disclosures do not appear in a contract with a Retirement Investor, the exemption is not satisfied with respect to transactions involving that Retirement Investor. The written contract must (i) set forth the circumstances under which the Adviser and Financial Institution may engage in principal transactions with the plan, participant or beneficiary account, or IRA and (ii) identify and disclose the material conflicts of interest associated with principal transactions. The contract must also document the Retirement Investor's affirmative written consent, on a prospective basis, to principal transactions with the Adviser or Financial Institution. Finally, the contract must inform the Retirement Investor (i) that the consent to principal transactions is terminable at will by the Retirement Investor at any time, without penalty to the plan, participant or beneficiary account, or IRA, and (ii) of the right to obtain complete information about all the fees and other payments currently associated with its investments.

Enforcement of the Contractual Obligations

The contractual conditions set forth in Section II of the proposal are enforceable. Plans, plan participants and beneficiaries, IRA owners, and the Department may use the contract as a tool to ensure compliance with the exemption. The Department notes, however, that this contractual tool creates different rights with respect to plans, participant and beneficiaries, IRA owners and the Department.

1. IRA Owners

The contract between the IRA owner and the Adviser and Financial Institution forms the basis of the IRA owner's enforcement rights. As outlined above, the contract embodies obligations on the part of the Adviser and Financial Institution. The Department intends that all the contractual obligations (the Impartial Conduct Standards and the warranties) will be actionable by IRA owners. The most important of these contractual obligations for enforcement purposes is the obligation imposed on both the Adviser and the Financial Institution to comply with the Impartial Conduct Standards. Because these standards are contractually imposed, the IRA owner has a claim if, for example, the Adviser recommends an investment product that is not in fact in the best interest of the IRA owner.

2. Plans, Plan Participants and Beneficiaries

The protections of the exemption and contractual terms will also be enforceable by plans, plan participants and beneficiaries. Specifically, if an Adviser or Financial Institution receives compensation in a prohibited transaction but fails to satisfy any of the Impartial Conduct Standards or any other condition of the exemption, the Adviser and Financial Institution would be unable to qualify for relief under the exemption, and, as a result, could be liable under ERISA section 502(a)(2) and (3). An Adviser's failure to comply with the exemption or the Impartial Conduct Standards would result in a non-exempt prohibited transaction and would likely constitute a fiduciary breach. As a result, a plan, plan participant or beneficiary would be able to sue under ERISA section 502(a)(2) or (3) to recover any loss in value to the plan (including the loss in value to an individual account), or to obtain disgorgement of any wrongful profits or unjust enrichment. Additionally, plans, participants and beneficiaries could enforce their obligations in an action based on breach of the agreement.

3. The Department

In addition, the Department will be able to enforce ERISA's prohibited transaction provisions with respect to employee benefit plans, but not IRAs, in the event that the Adviser or Financial Institution receives compensation in a prohibited transaction but fails to comply with the Impartial Conduct Standards or any other conditions of the exemption. If any of the specific conditions of the exemption are not met, the Adviser and Financial Institution will have engaged in a non-exempt prohibited transaction, and the Department will be entitled to seek relief under ERISA section 502(a)(2) and (5).

[21] *See* Section VI(h) of the proposed exemption.

4. Excise Taxes Under the Code

In addition to the claims described above that may be brought by IRA owners, plans, plan participants and beneficiaries, and the Department, to enforce the contract and ERISA, Advisers and Financial Institutions that engage in prohibited transactions under the Code are subject to an excise tax. The excise tax is generally equal to 15% of the amount involved. Parties who have participated in a prohibited transaction for which an exemption is not available must pay the excise tax and file Form 5330 with the Internal Revenue Service.

Prohibited Provisions

Finally, in order to preserve these various enforcement rights, Section II(f) of the proposal provides that certain provisions may not be in the contract. If these provisions appear in a contract with a Retirement Investor, the exemption is not satisfied with respect to transactions involving that Retirement Investor. First, the proposal provides that the contract may not contain exculpatory provisions that disclaim or otherwise limit liability for an Adviser's or Financial Institution's violations of the contract's terms. Second, the contract may not require the plan, IRA or Retirement Investor to agree to waive its right to bring or participate in a class action or other representative action in court in a contract dispute with the Adviser or Financial Institution. The right of a Retirement Investor to bring a class-action claim in court (and the corresponding limitation on fiduciaries' ability to mandate class-action arbitration) is consistent with FINRA's position that its arbitral forum is not the correct venue for class-action claims. As proposed, this section would not impact the ability of a Financial Institution or Adviser, and a Retirement Investor, to enter into pre-dispute binding arbitration agreement with respect to individual contract claims. The Department expects that most such individual arbitration claims under this exemption will be subject to FINRA's arbitration procedures and consumer protections. The Department seeks comments on whether there are certain procedures and/or consumer protections that it should adopt or mandate for those contract disputes not covered by FINRA.

General Conditions Applicable to Each Transaction (Section III)

Section III of the proposal sets forth conditions that apply to the terms of each principal transaction entered into under the exemption. As noted above, Section III(a) of the proposal provides that the debt security being bought or sold must not have been issued or, at the time of the transaction, underwritten by the Financial Institution or any Affiliate. The debt security also must possess no greater than a moderate credit risk and be sufficiently liquid that the debt security could be sold at or near its fair market value within a reasonably short period of time.

Section III(b) provides that the principal transaction may not be part of an agreement, arrangement, or understanding designed to evade compliance with ERISA or the Code, or to otherwise impact the value of the debt security. Such a condition protects against the Adviser or Financial Institution manipulating the terms of the principal transaction, either as an isolated transaction or as a part of a series of transactions, to benefit themselves or their Affiliates. Further, this condition would also prohibit an Adviser or Financial Institution from engaging in principal transactions with Retirement Investors for the purpose of ridding inventory of unwanted or poorly performing debt securities.

Section III(c) of the proposal provides that the purchase or sale of the debt security must be for no consideration other than cash. By limiting a purchase or sale of debt securities to cash consideration, the Department intends that relief will not be provided for a principal transaction that is executed on an in-kind basis.

Finally, Section III(d) of the proposal addresses the pricing of the principal transaction. Section III(d)(1) provides that the purchase or sale of the debt security must be executed at a price that the Adviser and Financial Institution reasonably believe is at least as favorable to the plan, participant or beneficiary account, or IRA than the price available to the plan, participant or beneficiary account, or IRA in a transaction that is not a principal transaction. Section III(d)(2) provides that the purchase or sale of the debt security must be at least as favorable to the plan, participant or beneficiary account, or IRA as the contemporaneous price for the debt security, or a similar security if a price is not available with respect to the same debt security, offered by two ready and willing counterparties that are not Affiliates in agency transactions. When evaluating the price offered by the counterparties, the Adviser and Financial Institution may take into account the resulting price to the plan, participant or beneficiary account, or IRA, including commissions. The Department intends that the proposal should allow a comparison between the actual cost to the plan, participant or beneficiary account, or IRA of the principal transaction (including the mark-up or mark-down) and the actual cost to the plan, participant or beneficiary account, or IRA of a non-principal transaction (*e.g.,* an agency transaction) in the same or a similar debt security, including a commission.

For purposes of Section III(d)(2), the similarity of a debt security should be construed in accordance with FINRA Rule 2121, or its successor, and the guidance promulgated thereunder. Generally, such guidance has stated that a similar debt security is one which is sufficiently similar to the subject debt security that it would serve as a reasonable alternative investment for the applicable investor.

Disclosure Requirements (Section IV)

Prior to engaging in a principal transaction, Section IV(a) of the proposal provides that the Adviser or Financial Institution must provide a pre-transaction disclosure to the Retirement Investor, either orally or in writing. The disclosure must notify the Retirement Investor that the purchase or sale of the debt security will be executed as a principal transaction between the Adviser or Financial Institution and the plan, participant or beneficiary account, or the IRA. Further, the disclosure must also provide the Retirement Investor with any available pricing information regarding the debt security, including two quotes obtained from unaffiliated parties required by Section III(d)(2).

As proposed, the pre-transaction disclosure set forth in Section IV(a) would also include the mark-up or mark-down to be charged in connection with the principal transaction. The purpose of this requirement would be to permit the Retirement Investor to evaluate the compensation and other transaction costs associated with the principal transaction. The Department believes it is important that the Financial Institution and Adviser disclose the compensation they will receive before the Retirement Investor consents to engage in the principal transaction.

For purpose of Section IV, the Department is considering defining a mark-up as the amount in excess of the ''prevailing market price'' that a customer pays for the debt security. Mark-down would be defined as the amount by which the price of a debt security is reduced from the ''prevailing market price'' that a customer receives for the debt security. The Department is

further considering whether to define the ''prevailing market price'' by reference to FINRA Rule 2121 and Supplementary Material .02 thereunder, which sets forth a methodology for determining the prevailing market price.

We request comment on our proposed approach to the definition of mark-up and mark-down, and in particular, our potential reliance on the FINRA guidance in Rule 2121 for purposes of the disclosure requirement in this exemption. Would a disclosure of the mark-up/down as defined in this manner provide information that will be useful to Retirement Investors in evaluating the principal transaction? Are there practical difficulties with our approach? Are there other formulations of the mark-up mark-down definition that have advantages in these respects?

Section IV(b) of the proposal provides that the Financial Institution must provide a written confirmation of the principal transaction in accordance with Rule 10b–10 under the Securities Exchange Act of 1934 [22] that also includes disclosure of the mark-up, mark-down, or other payment to the Adviser, Financial Institution or Affiliate in connection with the Principal Transaction.

Section IV(c) of the proposal provides that the Adviser or the Financial Institution must provide the Retirement Investor with an annual statement that lists the principal transactions engaged in during the year, provides the prevailing market price at which the debt security was purchased or sold, and provides the applicable mark-up or mark-down or other payment for each debt security. The annual statement must also remind the Retirement Investor that it may withdraw its consent to principal transactions at any time, without penalty to the plan, participant or beneficiary account, or IRA. The annual statement may be provided in combination with other statements provided to the Retirement Investor by the Adviser or Financial Institution.

Finally, Section IV(d) of the proposal provides that, upon reasonable request, the Adviser or Financial Institution must provide the Retirement Investor with additional information regarding the debt security and the transaction for any principal transaction that has occurred within the past 6 years preceding the date of the request.

Recordkeeping (Section V) and Definitions (Section VI)

Section V of the proposal establishes a recordkeeping requirement, and Section VI sets forth definitions that are used in the proposed exemption.

Applicability Date

The Department is proposing that compliance with the final regulation defining a fiduciary under ERISA section 3(21)(A)(ii) and Code section 4975(e)(3)(B) will begin eight months after publication of the final regulation in the **Federal Register** (Applicability Date). The Department proposes to make this exemption, if granted, available on the Applicability Date.

No Relief Proposed From ERISA Section 406(a)(1)(C) or Code section 4975(c)(1)(C) for the Provision of Services

If granted, this proposed exemption will not provide relief from a transaction prohibited by ERISA section 406(a)(1)(C), or from the taxes imposed by Code section 4975(a) and (b) by reason of Code section 4975(c)(1)(C), regarding the furnishing of goods, services or facilities between a plan and a party in interest. The provision of investment advice to a plan under a contract with a fiduciary is a service to the plan and compliance with this exemption will not relieve an Adviser or Financial Institution of the need to comply with ERISA section 408(b)(2), Code section 4975(d)(2), and applicable regulations thereunder.

Paperwork Reduction Act Statement

As part of its continuing effort to reduce paperwork and respondent burden, the Department conducts a preclearance consultation program to provide the general public and Federal agencies with an opportunity to comment on proposed and continuing collections of information in accordance with the Paperwork Reduction Act of 1995 (PRA) (44 U.S.C. 3506(c)(2)(A)). This helps to ensure that the public understands the Department's collection instructions, respondents can provide the requested data in the desired format, reporting burden (time and financial resources) is minimized, collection instruments are clearly understood, and the Department can properly assess the impact of collection requirements on respondents.

Currently, the Department is soliciting comments concerning the proposed information collection request (ICR) included in the Proposed Class Exemption for Principal Transactions in Certain Debt Securities between Investment Advice Fiduciaries and Employee Benefit Plans and IRAs as part of its proposal to amend its 1975 rule that defines when a person who provides investment advice to an employee benefit plan, participant or beneficiary, or IRA owner, becomes a fiduciary. A copy of the ICR may be obtained by contacting the PRA addressee shown below or at *http://www.RegInfo.gov*.

The Department has submitted a copy of the Proposed Class Exemption for Principal Transactions in Certain Debt Securities between Investment Advice Fiduciaries and Employee Benefit Plans and IRAs to the Office of Management and Budget (OMB) in accordance with 44 U.S.C. 3507(d) for review of its information collections. The Department and OMB are particularly interested in comments that:

- Evaluate whether the collection of information is necessary for the proper performance of the functions of the agency, including whether the information will have practical utility;
- Evaluate the accuracy of the agency's estimate of the burden of the collection of information, including the validity of the methodology and assumptions used;
- Enhance the quality, utility, and clarity of the information to be collected; and
- Minimize the burden of the collection of information on those who are to respond, including through the use of appropriate automated, electronic, mechanical, or other technological collection techniques or other forms of information technology, *e.g.,* permitting electronic submission of responses.

Comments should be sent to the Office of Information and Regulatory Affairs, Office of Management and Budget, Room 10235, New Executive Office Building, Washington, DC 20503; Attention: Desk Officer for the Employee Benefits Security Administration. OMB requests that comments be received within 30 days of publication of the Proposed Investment Advice Initiative to ensure their consideration.

PRA Addressee: Address requests for copies of the ICR to G. Christopher Cosby, Office of Policy and Research, U.S. Department of Labor, Employee Benefits Security Administration, 200 Constitution Avenue NW, Room N–5718, Washington, DC 20210. Telephone (202) 693–8410; Fax: (202) 219–5333. These are not toll-free numbers. ICRs submitted to OMB also are available at *http://www.RegInfo.gov*.

As discussed in detail below, the proposed class exemption would permit principal transactions in certain debt securities between a plan, participant or beneficiary account, or an IRA, and a financial institution or certain of its affiliates. The proposed class exemption

[22] 17 CFR 240.10b–10.

would require financial institutions and their advisers to enter into a contractual arrangement with the retirement investor (*i.e.,* the plan fiduciary, participant or beneficiary, or the IRA owner), make certain disclosures to the retirement investors and maintain records necessary to prove that the conditions of the exemption have been met for a period of six (6) years from the date of each principal transaction. These requirements are ICRs subject to the PRA.

The Department has made the following assumptions in order to establish a reasonable estimate of the paperwork burden associated with these ICRs:

- Approximately 2,800 financial institutions [23] will utilize the proposed exemption to engage in principal transactions and eight percent will be new each year;
- Financial Institutions and advisers will use existing in-house resources to obtain the required quotes and maintain the recordkeeping systems necessary to meet the requirements of the exemption; and
- A combination of personnel will perform the tasks associated with the ICRs at an hourly wage rate of $125.95 for a financial manager, $30.42 for clerical personnel, $79.67 for an IT professional, and $129.94 for a legal professional.[24]

Obtaining Quotes

In order to engage in principal transactions, Section III(d) of the proposed class exemption requires financial institutions to obtain two price quotes from unaffiliated parties in agency transactions. The Department estimates that ten percent of defined benefit (DB) plans that obtain investment advice from fiduciaries will engage in principal transactions. These plans are assumed to engage in one transaction per year requiring a total of approximately 2,000 quotes annually. Similarly, the Department estimates that ten percent of defined contribution (DC) plans that do not allow participants to direct investments that obtain investment advice from fiduciaries will engage in principal transactions. These plans are assumed to engage in one transaction per year requiring a total of approximately 6,000 quotes annually. The Department estimates that one percent of DC plan participants, who direct their own investments and obtain investment advice from fiduciaries, will engage in 12 principal transactions annually (one per month) requiring approximately 261,000 quotes. Finally, the Department estimates that ten percent of IRA owners who obtain investment advice from fiduciaries will engage in principal transactions. They are assumed to engage in one transaction per year requiring a total of approximately 4 million quotes annually.

Overall, the terms of this exemption will result in financial institutions and advisers obtaining approximately 4.3 million quotes per year. The Department assumes that a financial manager will spend five minutes to obtain the quotes. Therefore, obtaining quotes will produce approximately 359,000 hours of burden annually at an equivalent cost of $45.2 million.

Contract

In order to engage in principal transactions under this proposed class exemption, Section II requires financial institutions and advisers to enter into a written contract with retirement investors affirmatively stating that the financial institution and adviser are fiduciaries under ERISA or the Code with respect to recommendations regarding principal transactions, and that the financial institution and adviser will act in the best interest of the retirement investor.

The Department assumes that financial institutions already maintain contracts with their clients. Drafting the contractual provisions required by Section II and inserting them into the existing contracts will require 24 hours of legal time during the first year that the financial institution uses the class exemption. This legal work results in approximately 67,000 hours of burden during the first year and approximately 5,000 hours of burden during subsequent years at an equivalent cost of $8.7 million and $699,000 respectively.

Because the Department assumes that financial institutions already maintain contracts with their clients, the required contractual provisions will not require any additional costs for production or distribution.

Disclosures and Statement

The conditions of this PTE require the financial institution and adviser to make certain disclosures to the retirement investor. These disclosures include the two price quotes obtained from unaffiliated parties in agency transactions, other available pre-transaction pricing information, as well as the mark-up/mark-down to be charged, and an annual statement describing all transactions made during the year. The quotes and pre-transaction pricing and mark-up disclosures may be made orally or in writing. The Department assumes that all financial institutions and advisers will use the oral option at no additional burden.

The Department estimates that 2 million plans and IRAs will receive a one-page annual statement. DB and DC plans that do not allow participants to direct investments will receive the statement electronically at de minimis cost. The statement will be distributed electronically to 38 percent of the 11,000 DC plan participants and 50 percent of 2 million IRA holders at de minimis cost. Paper statements will be mailed to 62 percent of DC plan participants and 50 percent of IRA owners. The Department estimates that electronic distribution will result in de minimis cost, while paper distribution will cost approximately $548,000. Paper distribution will also require two minutes of clerical time to print and mail the statement, resulting in 34,000 hours at an equivalent cost of $1 million annually.

Confirmation

The conditions of this PTE require the financial institution to provide a confirmation notice upon completion of each transaction. The Department believes that providing confirmation notices is a regular and customary business practice, and therefore no additional burden is imposed by this requirement.

Recordkeeping Requirement

Section V of the class exemption requires the financial institution to maintain or cause to be maintained for six years and disclosed upon request the records necessary for the Department, Internal Revenue Service, plan fiduciary, contributing employer or

[23] As described in the regulatory impact analysis for the accompanying rule, the Department estimates that approximately 2,619 broker-dealers service the retirement market. The Department anticipates that the exemption will be used primarily, but not exclusively, by broker-dealers. Further, the Department assumes that all broker-dealers servicing the retirement market will use the exemption. Beyond the 2,619 broker-dealers, the Department estimates that almost 200 other financial institutions will use the exemption.

[24] The Department's estimated 2015 hourly labor rates include wages, other benefits, and overhead, and are calculated as follows: Mean wage from the 2013 National Occupational Employment Survey (April 2014, Bureau of Labor Statistics *http://www.bls.gov/news.release/pdf/ocwage.pdf*); wages as a percent of total compensation from the Employer Cost for Employee Compensation (June 2014, Bureau of Labor Statistics *http://www.bls.gov/news.release/ecec.t02.htm*); overhead as a multiple of compensation is assumed to be 25 percent of total compensation for paraprofessionals, 20 percent of compensation for clerical, and 35 percent of compensation for professional; annual inflation assumed to be 2.3 percent annual growth of total labor cost since 2013 (Employment Costs Index data for private industry, September 2014 *http://www.bls.gov/news.release/eci.nr0.htm*).

employee organization whose members are covered by the plan, participants, beneficiaries and IRA owners to determine whether the conditions of this exemption have been met in a manner that is accessible for audit and examination.

The Department assumes that each financial institution will maintain these records in the normal course of business. Therefore, the Department has estimated that the additional time needed to maintain records consistent with the exemption will only require about one-half hour, on average, annually for a financial manager to organize and collate the documents or else draft a notice explaining that the information is exempt from disclosure, and an additional 15 minutes of clerical time to make the documents available for inspection during normal business hours or prepare the paper notice explaining that the information is exempt from disclosure. Thus, the Department estimates that a total of 45 minutes of professional time per firm would be required for a total hour burden of 2,100 hours at an equivalent cost of $198,000.

In connection with this recordkeeping and disclosure requirements discussed above, Section V(b)(2) and (3) provides that financial institutions relying on the exemption do not have to disclose trade secrets or other confidential information to members of the public (*i.e.,* plan fiduciaries, contributing employers or employee organizations whose members are covered by the plan, participants and beneficiaries and IRA owners), but that in the event they refuse to disclose information on this basis, they must provide a written notice to the requester advising of the reasons for the refusal and advising that the Department may request such information. The Department's experience indicates that this provision is not commonly invoked, and therefore, the written notice is rarely, if ever, generated. Therefore, the Department believes the cost burden associated with this clause is de minimis. No other cost burden exists with respect to recordkeeping.

IT Costs

The Department estimates that updating computer systems to insert the contract provisions into existing contracts, maintain the required records, and insert the required markup information into existing confirmation notices will require eight hours of IT staff time during the first year that the financial institution uses the PTE. This IT work results in approximately 22,000 hours of burden during the first year and approximately 1,800 hours of burden during subsequent years at an equivalent cost of $1.8 million and $142,000 respectively.

Overall Summary

Overall, the Department estimates that in order to meet the conditions of this class exemption, financial institutions and advisers will obtain approximately 4.3 million price quotes and distribute an additional 2 million statements annually. Obtaining these quotes, distributing statements, adjusting contracts, and maintaining records that the conditions of the exemption have been fulfilled will result in a total of 484,000 hours of burden during the first year and 402,000 hours of burden in subsequent years. The equivalent cost of this burden is $51.1million during the first year and $47.2 million in subsequent years. This exemption will result in a materials and postage cost burden of $548,000 annually.

These paperwork burden estimates are summarized as follows:

Type of Review: New collection (Request for new OMB Control Number).

Agency: Employee Benefits Security Administration, Department of Labor.

Titles: (1) Proposed Exemption for Principal Transactions in Certain Debt Securities between Investment Advice Fiduciaries and Employee Benefit Plans and IRAs and (2) Proposed Investment Advice Regulation.

OMB Control Number: 1210–NEW.

Affected Public: Business or other for-profit.

Estimated Number of Respondents: 2,800.

Estimated Number of Annual Responses: 6,333,921.

Frequency of Response: When engaging in exempted transaction; Annually.

Estimated Total Annual Burden Hours: 484,072 hours during the first year, 401,643 in subsequent years.

Estimated Total Annual Burden Cost: $548,079.

General Information

The attention of interested persons is directed to the following:

(1) The fact that a transaction is the subject of an exemption under ERISA section 408(a) and Code section 4975(c)(2) does not relieve a fiduciary or other party in interest or disqualified person with respect to a plan or IRA from certain other provisions of ERISA and the Code, including any prohibited transaction provisions to which the exemption does not apply and the general fiduciary responsibility provisions of ERISA section 404 which require, where applicable, among other things, that a fiduciary discharge his or her duties respecting the plan solely in the interests of the plan's participants and beneficiaries and in a prudent fashion in accordance with ERISA section 404(a)(1)(B);

(2) If granted, this class exemption does not extend to transactions prohibited under ERISA section 406(a)(1)(B) and (C), ERISA section 406(b)(3) and Code section 4975(c)(1)(B), (C), and (F);

(3) Before a class exemption may be granted under ERISA section 408(a) and Code section 4975(c)(2), the Department must find that the class exemption is administratively feasible, in the interests of plans and their participants and beneficiaries and IRA owners, and protective of the rights of the plan's participants and beneficiaries and IRA owners;

(4) If granted, this class exemption will be applicable to a particular transaction only if the transaction satisfies the conditions specified in the class exemption; and

(5) If granted, this class exemption will be supplemental to, and not in derogation of, any other provisions of ERISA and the Code, including statutory or administrative exemptions and transitional rules. Furthermore, the fact that a transaction is subject to an administrative or statutory exemption is not dispositive of whether the transaction is in fact a prohibited transaction.

Proposed Exemption

The Department is proposing the following exemption under the authority of ERISA section 408(a) and Code section 4975(c)(2), and in accordance with the procedures set forth in 29 CFR part 2570, subpart B (76 FR 66637, October 27, 2011).[25]

Section I—Exemption

(a) *In general.* ERISA and the Internal Revenue Code prohibit fiduciary advisers to employee benefit plans (Plans) and individual retirement plans (IRAs) from self-dealing, including receiving compensation that varies based on their investment recommendations. ERISA and the Code also prohibit fiduciaries from engaging in securities purchases and sales with Plans or IRAs on behalf of their own accounts (Principal Transactions). This exemption permits certain persons who provide investment advice to Retirement Investors (*i.e.,* fiduciaries of Plans, Plan participants or beneficiaries,

[25] For purposes of this proposed exemption, references to ERISA should be read to refer as well to the corresponding provisions of the Code.

or IRA owners) to engage in certain Principal Transactions as described below.

(b) *Exemption for Certain Principal Transactions.* This exemption permits an Adviser or Financial Institution to engage in the purchase or sale of a Debt Security in a Principal Transaction with a Plan, participant or beneficiary account, or IRA, and receive a mark-up, mark-down or other payment for themselves or any Affiliate, as a result of the Adviser's and Financial Institution's advice. As detailed below, parties seeking to rely on the exemption must contractually acknowledge fiduciary status, agree to adhere to Impartial Conduct Standards in rendering advice, disclose Material Conflicts of Interest associated with Principal Transactions and obtain the prospective written consent of the Plan or IRA; warrant that they have adopted policies and procedures designed to mitigate the dangers posed by Material Conflicts of Interest; disclose important information about the cost of the security in the Principal Transaction and retain certain records. This exemption provides relief from ERISA section 406(a)(1)(A) and (D) and section 406(b)(1) and (2), and the taxes imposed by Code section 4975(a) and (b), by reason of Code section 4975(c)(1)(A), (D), and (E). The Adviser and Financial Institution must comply with the conditions of Sections II–V.

(c) *Scope of this exemption:* This exemption does not apply if:

(1) The Adviser: (i) Exercises any discretionary authority or discretionary control respecting management of the assets of the Plan or IRA involved in the transaction or exercises any discretionary authority or control respecting management or the disposition of the assets; or (ii) has any discretionary authority or discretionary responsibility in the administration of the Plan or IRA; or

(2) The Plan is covered by Title I of ERISA and (i) the Adviser, Financial Institution or any Affiliate is the employer of employees covered by the Plan, or (ii) the Adviser or Financial Institution is a named fiduciary or plan administrator (as defined in ERISA section 3(16)(A)) with respect to the Plan, or an affiliate thereof, that was selected to provide investment advice to the plan by a fiduciary who is not Independent.

Section II—Contract, Impartial Conduct, and Other Requirements

(a) *Contract.* Prior to engaging in the Principal Transaction, the Adviser and Financial Institution enter into a written contract with the Retirement Investor, acting on behalf of the Plan, participant or beneficiary account, or IRA, that incorporates the terms required by Section II(b)–(e).

(b) *Fiduciary.* The written contract affirmatively states that the Adviser and Financial Institution are fiduciaries under ERISA or the Code, or both, with respect to any investment recommendation to the Retirement Investor regarding Principal Transactions.

(c) *Impartial Conduct Standards.* The Adviser and Financial Institution affirmatively agree to, and comply with, the following:

(1) When providing investment advice to a Retirement Investor regarding the Principal Transaction, the Adviser and Financial Institution will provide investment advice that is in the Best Interest of the Retirement Investor (*i.e.,* advice that reflects the care, skill, prudence, and diligence under the circumstances then prevailing that a prudent person would exercise based on the investment objectives, risk tolerance, financial circumstances, and needs of the Retirement Investor, without regard to the financial or other interests of the Adviser, Financial Institution, or any Affiliate or other party);

(2) The Adviser and Financial Institution will not enter into a Principal Transaction with the Plan, participant or beneficiary account, or IRA if the purchase or sales price of the Debt Security (including the mark-up or mark-down) is unreasonable under the circumstances; and

(3) The Adviser's and Financial Institution's statements about the Debt Security, fees, Material Conflicts of Interest, the Principal Transaction, and any other matters relevant to a Retirement Investor's investment decision in the Debt Security, are not misleading.

(d) *Warranty.* The Adviser and Financial Institution affirmatively warrant the following:

(1) The Adviser, Financial Institution and Affiliates will comply with all applicable federal and state laws regarding the rendering of the investment advice and the purchase and sale of the Debt Security;

(2) The Financial Institution has adopted written policies and procedures reasonably designed to mitigate the impact of Material Conflicts of Interest and to ensure that its individual Advisers adhere to the Impartial Conduct Standards set forth in Section II(c);

(3) In formulating its policies and procedures, the Financial Institution has specifically identified Material Conflicts of Interest and adopted measures to prevent the Material Conflicts of Interest from causing violations of the Impartial Conduct Standards set forth in Section II(c); and

(4) Neither the Financial Institution nor (to the best of its knowledge) any Affiliate uses quotas, appraisals, performance or personnel actions, bonuses, contests, special awards, differentiated compensation or other actions or incentives to the extent they would tend to encourage individual Advisers to make recommendations regarding Principal Transactions that are not in the Best Interest of the Retirement Investor.

(e) *Principal Transaction Disclosures.* The written contract must specifically:

(1) Set forth in writing (i) the circumstances under which the Adviser and Financial Institution may engage in Principal Transactions with the Plan, participant or beneficiary account, or IRA and (ii) identify and disclose the Material Conflicts of Interest associated with Principal Transactions;

(2) Document the Retirement Investor's affirmative written consent, on a prospective basis, to Principal Transactions between the Adviser or Financial Institution and the Plan, participant or beneficiary account, or IRA; and

(3) Inform the Retirement Investor (i) that the consent set forth in Section II(e)(2) is terminable at will by the Retirement Investor at any time, without penalty to the Plan or IRA, and (ii) of the right to obtain complete information about all the fees and other payments currently associated with its investments.

(f) *Prohibited Contractual Provisions.* The written contract shall not contain the following:

(1) Exculpatory provisions disclaiming or otherwise limiting liability of the Adviser or Financial Institution for a violation of the contract's terms; and

(2) A provision under which the Plan, IRA or the Retirement Investor waives or qualifies its right to bring or participate in a class action or other representative action in court in a dispute with the Adviser or Financial Institution.

Section III—General Conditions

(a) *Debt Security.* The Debt Security being purchased or sold:

(1) Was not issued by the Financial Institution or any Affiliate;

(2) Is not purchased by the Plan, participant or beneficiary account, or IRA in an underwriting or underwriting syndicate in which the Financial

Institution or any Affiliate is the underwriter or a member;

(3) Possesses no greater than a moderate credit risk; and

(4) Is sufficiently liquid that the Debt Security could be sold at or near its fair market value within a reasonably short period of time.

(b) *Arrangement.* The Principal Transaction is not part of an agreement, arrangement, or understanding designed to evade compliance with ERISA or the Code, or to otherwise impact the value of the Debt Security.

(c) *Cash.* The purchase or sale of the Debt Security is for cash.

(d) *Pricing.* The purchase or sale of the Debt Security is executed at a price that:

(1) The Adviser and Financial Institution reasonably believe is at least as favorable to the Plan, participant or beneficiary account, or IRA than the price available to the Plan, participant or beneficiary account, or IRA in a transaction that is not a Principal Transaction; and

(2) Is at least as favorable to the Plan, participant or beneficiary account, or IRA as the contemporaneous price for the Debt Security, or a similar security if a price is not available with respect to the same Debt Security, offered by two ready and willing counterparties that are not Affiliates.

When comparing the price offered by the counterparties referred to in (2), the Adviser and Financial Institution may take into account a commission as part of the resulting price to the Plan, participant or beneficiary account, or IRA, as compared to the price of the Debt Security, including any mark-up or mark-down.

Section IV—Disclosure Requirements

(a) *Pre-Transaction Disclosure.* Prior to engaging in the Principal Transaction, the Adviser or Financial Institution provides the following, orally or in writing, to the Retirement Investor:

(1) A statement that the purchase or sale of the Debt Security will be executed as a Principal Transaction between the Adviser or Financial Institution and the Plan, participant or beneficiary account, or IRA; and

(2) Any available pricing information regarding the Debt Security, including the two quotes obtained pursuant to Section III(d). The mark-up or mark-down or other payment that will be charged also must be disclosed.

(b) *Confirmation.* The Financial Institution provides a written confirmation of the Principal Transaction in accordance with Rule 10b–10 under the Securities Exchange Act of 1934 that also includes disclosure of the mark-up, mark-down, or other payment to the Adviser, Financial Institution or Affiliate in connection with the Principal Transaction.

(c) *Annual Disclosure.* The Adviser or Financial Institution provides the following written information to the Retirement Investor, annually, within 45 days of the end of the applicable year, in a single disclosure:

(1) A list identifying each Principal Transaction engaged in during the applicable period, the prevailing market price at which the Debt Security was purchased or sold, and the applicable mark-up or mark-down or other payment for each Debt Security; and

(2) A statement that the consent required pursuant to Section II(e)(2) is terminable at will, without penalty to the Plan or IRA.

(d) *Upon Request.* Upon the Retirement Investor's reasonable request, prior to or following the completion of a Principal Transaction, the Adviser or Financial Institution must provide the Retirement Investor with additional information regarding the Debt Security and its purchase or sale; provided that such request may not relate to a Principal Transaction that was executed more than six (6) years from the date of the request.

Section V—Recordkeeping

(a) The Financial Institution maintains for a period of six (6) years from the date of each Principal Transaction the records necessary to enable the persons described in Section V(b) to determine whether the conditions of this exemption have been met, except that:

(1) If such records are lost or destroyed, due to circumstances beyond the control of the Financial Institution, then no prohibited transaction will be considered to have occurred solely on the basis of the unavailability of those records; and

(2) No party other than the Financial Institution that is engaging in the Principal Transaction shall be subject to the civil penalty that may be assessed under ERISA section 502(i) or to the taxes imposed by Code sections 4975(a) and (b) if the records are not maintained or are not available for examination as required by Section V(b).

(b)

(1) Except as provided in Section V(b)(2) and notwithstanding any provisions of ERISA sections 504(a)(2) and 504(b), the records referred to in Section V(a) are unconditionally available at their customary location for examination during normal business hours by:

(i) Any duly authorized employee or representative of the Department or the Internal Revenue Service;

(ii) any fiduciary of the Plan or IRA that was a party to a Principal Transaction described in this exemption, or any duly authorized employee or representative of such fiduciary;

(iii) any employer of participants and beneficiaries and any employee organization whose members are covered by the Plan, or any authorized employee or representative of these entities; and

(iv) any participant or beneficiary of the Plan, or the beneficial owner of an IRA.

(2) None of the persons described in subparagraph (1)(ii) through (iv) are authorized to examine trade secrets of the Financial Institution, or commercial or financial information which is privileged or confidential; and

(3) Should the Financial Institution refuse to disclose information on the basis that such information is exempt from disclosure, the Financial Institution must by the close of the thirtieth (30th) day following the request, provide a written notice advising the requestor of the reasons for the refusal and that the Department may request such information.

Section VI—Definitions

(a) ''Adviser'' means an individual who:

(1) Is a fiduciary of a Plan or IRA solely by reason of the provision of investment advice described in ERISA section 3(21)(A)(ii) or Code section 4975(e)(3)(B), or both, and the applicable regulations, with respect to the Assets involved in the transaction;

(2) Is an employee, independent contractor, agent, or registered representative of a Financial Institution; and

(3) Satisfies the applicable banking, and securities laws with respect to the covered transaction.

(b) ''Affiliate'' of an Adviser or Financial Institution mean:

(1) Any person directly or indirectly, through one or more intermediaries, controlling, controlled by, or under common control with the Adviser or Financial Institution. For this purpose, the term ''control'' means the power to exercise a controlling influence over the management or policies of a person other than an individual;

(2) Any officer, director, employee, relative (as defined in ERISA section 3(15)) or member of family (as defined in Code section 4975(e)(6)), agent or registered representative of, or partner

in the Adviser or Financial Institution; and

(3) Any corporation or partnership of which the Adviser or Financial Institution is an officer, director, or employee, or in which the Adviser or Financial Institution is a partner.

(c) Investment advice is in the ''Best Interest'' of the Retirement Investor when the Adviser and Financial Institution providing the advice act with the care, skill, prudence, and diligence under the circumstances then prevailing that a prudent person would exercise based on the investment objectives, risk tolerance, financial circumstances, and needs of the Retirement Investor, without regard to the financial or other interests of the Adviser, Financial Institution, any Affiliate or other party.

(d) ''Debt Security'' means a ''debt security'' as defined in Rule 10b–10(d)(4) of the Exchange Act that is:

(1) U.S. dollar denominated, issued by a U.S. corporation and offered pursuant to a registration statement under the Securities Act of 1933;

(2) An ''Agency Debt Security'' as defined in FINRA Rule 6710(l) or its successor; or

(3) A ''U.S. Treasury Security'' as defined in FINRA Rule 6710(p) or its successor.

(e) ''Financial Institution'' means the entity that (i) employs the Adviser or otherwise retains such individual as an independent contractor, agent or registered representative, and (ii) customarily purchases or sells Debt Securities for its own account in the ordinary course of its business, and that is:

(1) Registered as an investment adviser under the Investment Advisers Act of 1940 (15 U.S.C. 80b–1 *et seq.*) or under the laws of the state in which the adviser maintains its principal office and place of business;

(2) A bank or similar financial institution supervised by the United States or state, or a savings association (as defined in section 3(b)(1) of the Federal Deposit Insurance Act (12 U.S.C. 1813(b)(1))), but only if the advice resulting in the compensation is provided through a trust department of the bank or similar financial institution or savings association which is subject to periodic examination and review by federal or state banking authorities; and

(3) A broker or dealer registered under the Securities Exchange Act of 1934 (15 U.S.C. 78a *et seq.*).

(f) ''Independent'' means a person that:

(1) Is not the Adviser or Financial Institution or an Affiliate;

(2) Does not receive compensation or other consideration for his or her own account from the Adviser, Financial Institution or an Affiliate; and

(3) Does not have a relationship to or an interest in the Adviser, Financial Institution or an Affiliate that might affect the exercise of the person's best judgment in connection with transactions described in this exemption.

(g) ''Individual Retirement Account'' or ''IRA'' means any trust, account or annuity described in Code section 4975(e)(1)(B) through (F), including, for example, an individual retirement account described in Code section 408(a) and a health savings account described in Code section 223(d).

(h) A ''Material Conflict of Interest'' exists when an Adviser or Financial Institution has a financial interest that could affect the exercise of its best judgment as a fiduciary in rendering advice to a Retirement Investor regarding Principal Transactions.

(i) ''Plan'' means an employee benefit plan described in ERISA section 3(3) and any plan described in Code section 4975(e)(1)(A).

(j) ''Principal Transaction'' means a purchase or sale of a Debt Security where an Adviser or Financial Institution is purchasing from or selling to a Plan, participant or beneficiary account, or IRA on behalf of the Financial Institution's own account or the account of a person directly or indirectly, through one or more intermediaries, controlling, controlled by, or under common control with the Financial Institution.

(k) ''Retirement Investor'' means:

(1) A fiduciary of a non-participant directed Plan subject to Title I of ERISA with authority to make investment decisions for the Plan;

(2) A participant or beneficiary of a Plan subject to Title I of ERISA with authority to direct the investment of assets in his or her Plan account or to take a distribution; or

(3) The beneficial owner of an IRA acting on behalf of the IRA.

Signed at Washington, DC, this 14th day of April, 2015.

Phyllis C. Borzi,

Assistant Secretary, Employee Benefits Security Administration, Department of Labor.

[FR Doc. 2015–08833 Filed 4–15–15; 11:15 am]

BILLING CODE 4510–29–P

DEPARTMENT OF LABOR

Employee Benefits Security Administration

29 CFR Part 2550

[Application Number D–11687]

ZRIN 1210–ZA25

Proposed Amendment to Prohibited Transaction Exemption (PTE) 75–1, Part V, Exemptions From Prohibitions Respecting Certain Classes of Transactions Involving Employee Benefit Plans and Certain Broker-Dealers, Reporting Dealers and Banks

AGENCY: Employee Benefits Security Administration (EBSA), U.S. Department of Labor.

ACTION: Notice of Proposed Amendment to PTE 75–1, Part V.

SUMMARY: This document contains a notice of pendency before the Department of Labor of a proposed amendment to PTE 75–1, Part V, a class exemption from certain prohibited transactions provisions of the Employee Retirement Income Security Act of 1974 (ERISA) and the Internal Revenue Code (the Code). The provisions at issue generally prohibit fiduciaries of employee benefit plans and individual retirement accounts (IRAs), from lending money or otherwise extending credit to the plans and IRAs and receiving compensation in return. PTE 75–1, Part V, permits the extension of credit to a plan or IRA by a broker-dealer in connection with the purchase or sale of securities; however, it does not permit the receipt of compensation for an extension of credit by broker-dealers that are fiduciaries with respect to the assets involved in the transaction. The amendment proposed in this notice would permit investment advice fiduciaries to receive compensation when they extend credit to plans and IRAs to avoid a failed securities transaction. The proposed amendment would affect participants and beneficiaries of plans, IRA owners, and fiduciaries with respect to such plans and IRAs.

DATES: *Comments:* Written comments concerning the proposed class exemption must be received by the Department on or before July 6, 2015.

Applicability: The Department proposes to make this amendment applicable eight months after publication of the final amendment in the **Federal Register**.

ADDRESSES: All written comments concerning the proposed amendment to the class exemption should be sent to

the Office of Exemption Determinations by any of the following methods, identified by ZRIN: 1210–ZA25:

Federal eRulemaking Portal: http://www.regulations.gov at Docket ID number: EBSA–2014–0016. Follow the instructions for submitting comments.

Email to: e-OED@dol.gov.

Fax to: (202) 693–8474.

Mail: Office of Exemption Determinations, Employee Benefits Security Administration, (Attention: D–11687), U.S. Department of Labor, 200 Constitution Avenue NW., Suite 400, Washington, DC 20210.

Hand Delivery/Courier: Office of Exemption Determinations, Employee Benefits Security Administration, (Attention: D–11687), U.S. Department of Labor, 122 C St. NW., Suite 400, Washington, DC 20001.

Instructions. All comments must be received by the end of the comment period. The comments received will be available for public inspection in the Public Disclosure Room of the Employee Benefits Security Administration, U.S. Department of Labor, Room N–1513, 200 Constitution Avenue NW., Washington, DC 20210. Comments will also be available online at *www.regulations.gov*, at Docket ID number: EBSA–2014–0016 and *www.dol.gov/ebsa*, at no charge.

Warning: All comments will be made available to the public. Do not include any personally identifiable information (such as Social Security number, name, address, or other contact information) or confidential business information that you do not want publicly disclosed. All comments may be posted on the Internet and can be retrieved by most Internet search engines.

FOR FURTHER INFORMATION CONTACT: Susan Wilker, Office of Exemption Determinations, Employee Benefits Security Administration, U.S. Department of Labor, (202) 693–8824 (this is not a toll-free number).

SUPPLEMENTARY INFORMATION: The Department is proposing this amendment on its own motion, pursuant to ERISA section 408(a) and Code section 4975(c)(2), and in accordance with the procedures set forth in 29 CFR part 2570, subpart B (76 FR 66637 (October 27, 2011)).

Public Hearing: The Department plans to hold an administrative hearing within 30 days of the close of the comment period. The Department will ensure ample opportunity for public comment by reopening the record following the hearing and publication of the hearing transcript. Specific information regarding the date, location and submission of requests to testify will be published in a notice in the **Federal Register**.

Executive Summary

Purpose of Regulatory Action

The Department is proposing this amendment to PTE 75–1, Part V, in connection with its proposed regulation under ERISA section 3(21)(A)(ii) and Code section 4975(e)(3)(B) (Proposed Regulation), published elsewhere in this issue of the **Federal Register**. The Proposed Regulation specifies when an entity is a fiduciary by reason of the provision of investment advice for a fee or other compensation regarding assets of a plan or IRA (*i.e.*, an investment advice fiduciary). If adopted, the Proposed Regulation would replace an existing regulation that was adopted in 1975. The Proposed Regulation is intended to take into account the advent of 401(k) plans and IRAs, the dramatic increase in rollovers, and other developments that have transformed the retirement plan landscape and the associated investment market over the four decades since the existing regulation was issued. In light of the extensive changes in retirement investment practices and relationships, the Proposed Regulation would update existing rules to distinguish more appropriately between the sorts of advice relationships that should be treated as fiduciary in nature and those that should not.

This notice proposes an amendment to PTE 75–1, Part V, that would allow broker-dealers that are investment advice fiduciaries to receive compensation when they extend credit to plans and IRAs to avoid failed securities transactions entered into by the plan or IRA. In the absence of an exemption, these transactions would be prohibited under ERISA and the Code. In this regard, ERISA and the Code generally prohibit fiduciaries from lending money or otherwise extending credit to plans and IRAs, and from receiving compensation in return.

ERISA section 408(a) specifically authorizes the Secretary of Labor to grant administrative exemptions from the prohibited transaction provisions.[1] Regulations at 29 CFR 2570.30 to 2570.52 describe the procedures for applying for an administrative exemption. Before granting an exemption, the Department must find that it is administratively feasible, in the interests of plans, their participants and beneficiaries and IRA owners, and protective of the rights of participants and beneficiaries of such plans and IRA owners. Interested parties are permitted to submit comments to the Department through July 6, 2015. The Department plans to hold an administrative hearing within 30 days of the close of the comment period.

Summary of the Major Provisions

The amendment to PTE 75–1, Part V, proposed in this notice would allow investment advice fiduciaries that are broker-dealers to receive compensation when they lend money or otherwise extend credit to plans or IRAs to avoid the failure of a purchase or sale of a security. The proposed exemption contains conditions that the broker-dealer lending money or otherwise extending credit must satisfy in order to take advantage of the exemption. In particular, the potential failure of the securities transaction may not be a result of the action or inaction of the fiduciary, and the terms of the extension of credit must be at least as favorable to the plan or IRA as terms the plan or IRA could obtain in an arm's length transaction with an unrelated party. Certain advance written disclosures must be made to the plan or IRA, in particular, with respect to the rate of interest or other fees charged for the loan or other extension of credit.

Regulatory Impact Analysis

Executive Order 12866 and 13563 Statement

Under Executive Orders 12866 and 13563, the Department must determine whether a regulatory action is ''significant'' and therefore subject to the requirements of the Executive Order and subject to review by the Office of Management and Budget (OMB). Executive Orders 13563 and 12866 direct agencies to assess all costs and benefits of available regulatory alternatives and, if regulation is necessary, to select regulatory approaches that maximize net benefits (including potential economic, environmental, public health and safety effects, distributive impacts, and equity). Executive Order 13563 emphasizes the importance of quantifying both costs and benefits, of reducing costs, of harmonizing and streamlining rules, and of promoting flexibility. It also requires federal agencies to develop a plan under which

[1] Code section 4975(c)(2) authorizes the Secretary of the Treasury to grant exemptions from the parallel prohibited transaction provisions of the Code. Reorganization Plan No. 4 of 1978 (5 U.S.C. app. at 214 (2000)) generally transferred the authority of the Secretary of the Treasury to issue administrative exemptions under Code section 4975 to the Secretary of Labor. This amendment to PTE 75–1, Part V, would provide relief from the indicated prohibited transaction provisions of both ERISA and the Code.

the agencies will periodically review their existing significant regulations to make the agencies' regulatory programs more effective or less burdensome in achieving their regulatory objectives.

Under Executive Order 12866, ''significant'' regulatory actions are subject to the requirements of the Executive Order and review by the Office of Management and Budget (OMB). Section 3(f) of Executive Order 12866, defines a ''significant regulatory action'' as an action that is likely to result in a rule (1) having an annual effect on the economy of $100 million or more, or adversely and materially affecting a sector of the economy, productivity, competition, jobs, the environment, public health or safety, or State, local or tribal governments or communities (also referred to as ''economically significant'' regulatory actions); (2) creating serious inconsistency or otherwise interfering with an action taken or planned by another agency; (3) materially altering the budgetary impacts of entitlement grants, user fees, or loan programs or the rights and obligations of recipients thereof; or (4) raising novel legal or policy issues arising out of legal mandates, the President's priorities, or the principles set forth in the Executive Order. Pursuant to the terms of the Executive Order, OMB has determined that this action is ''significant'' within the meaning of Section 3(f)(4) of the Executive Order. Accordingly, the Department has undertaken an assessment of the costs and benefits of the proposed amendment, and OMB has reviewed this regulatory action.

Background

Proposed Regulation

As explained more fully in the preamble to the Department's Proposed Regulation under ERISA section 3(21)(A)(ii) and Code section 4975(e)(3)(B), also published in this issue of the **Federal Register**, ERISA is a comprehensive statute designed to protect the interests of plan participants and beneficiaries, the integrity of employee benefit plans, and the security of retirement, health, and other critical benefits. The broad public interest in ERISA-covered plans is reflected in the imposition of stringent fiduciary responsibilities on parties engaging in important plan activities, as well as in the tax-favored status of plan assets and investments. One of the chief ways in which ERISA protects employee benefit plans is by requiring that plan fiduciaries comply with fundamental obligations rooted in the law of trusts. In particular, plan fiduciaries must manage plan assets prudently and with undivided loyalty to the plans and their participants and beneficiaries.[2] In addition, they must refrain from engaging in ''prohibited transactions,'' which ERISA forbids because of the dangers posed by the fiduciaries' conflicts of interest with respect to the transactions.[3] When fiduciaries violate ERISA's fiduciary duties or the prohibited transaction rules, they may be held personally liable for the breach.[4] In addition, violations of the prohibited transaction rules are subject to excise taxes under the Code.

The Code also has rules regarding fiduciary conduct with respect to tax-favored accounts that are not generally covered by ERISA, such as IRAs. Although ERISA's general fiduciary obligations of prudence and loyalty do not govern the fiduciaries of IRAs, these fiduciaries are subject to the prohibited transaction rules. In this context, fiduciaries engaging in the prohibited transactions are subject to an excise tax enforced by the Internal Revenue Service. Unlike participants in plans covered by Title I of ERISA, IRA owners do not have a statutory right to bring suit against fiduciaries for violation of the prohibited transaction rules and fiduciaries are not personally liable to IRA owners for the losses caused by their misconduct. Nor can the Secretary of Labor bring suit to enforce the prohibited transactions rules on behalf of IRA owners.

Under the statutory framework, the determination of who is a ''fiduciary'' is of central importance. Many of ERISA's protections, duties, and liabilities hinge on fiduciary status. In relevant part, section 3(21)(A) of ERISA and section 4975(e)(3) of the Code provide that a person is a fiduciary with respect to a plan or IRA to the extent he or she (i) exercises any discretionary authority or discretionary control with respect to management of such plan or IRA, or exercises any authority or control with respect to management or disposition of its assets; (ii) renders investment advice for a fee or other compensation, direct or indirect, with respect to any moneys or other property of such plan or IRA, or has any authority or responsibility to do so; or, (iii) has any discretionary authority or discretionary responsibility in the administration of such plan or IRA.

The statutory definition deliberately casts a wide net in assigning fiduciary responsibility with respect to plan and IRA assets. Thus, ''any authority or control'' over plan or IRA assets is sufficient to confer fiduciary status, and any persons who render ''investment advice for a fee or other compensation, direct or indirect'' are fiduciaries, regardless of whether they have direct control over the plan's or IRA's assets and regardless of their status as an investment adviser or broker under the federal securities laws. The statutory definition and associated fiduciary responsibilities were enacted to ensure that plans and IRAs can depend on persons who provide investment advice for a fee to provide recommendations that are untainted by conflicts of interest. In the absence of fiduciary status, the providers of investment advice would neither be subject to ERISA's fundamental fiduciary standards, nor accountable for imprudent, disloyal, or tainted advice under ERISA or the Code, no matter how egregious the misconduct or how substantial the losses. Plans, individual participants and beneficiaries, and IRA owners often are not financial experts and consequently must rely on professional advice to make critical investment decisions. The significance of financial advice has become still greater with increased reliance on participant-directed plans and IRAs for the provision of retirement benefits.

In 1975, the Department issued a regulation, at 29 CFR 2510.3–21(c)(1975) defining the circumstances under which a person is treated as providing ''investment advice'' to an employee benefit plan within the meaning of section 3(21)(A)(ii) of ERISA (the ''1975 regulation'').[5] The 1975 regulation narrowed the scope of the statutory definition of fiduciary investment advice by creating a five-part test that must be satisfied before a person can be treated as rendering investment advice for a fee. Under the 1975 regulation, for advice to constitute ''investment advice,'' an adviser who does not have discretionary authority or control with respect to the purchase or sale of securities or other property of the plan must—(1) render advice as to the value of securities or other property, or make recommendations as to the advisability of investing in, purchasing or selling securities or other property (2) on a regular basis (3) pursuant to a mutual agreement, arrangement or understanding, with the plan or a plan fiduciary that (4) the advice will serve as a primary basis for investment

[2] ERISA section 404(a).

[3] ERISA section 406. ERISA also prohibits certain transactions between a plan and a ''party in interest.''

[4] ERISA section 409; *see also* ERISA section 405.

[5] The Department of Treasury issued a virtually identical regulation, at 26 CFR 54.4975–9(c), which interprets Code section 4975(e)(3).

decisions with respect to plan assets, and that (5) the advice will be individualized based on the particular needs of the plan. The regulation provides that an adviser is a fiduciary with respect to any particular instance of advice only if he or she meets each and every element of the five-part test with respect to the particular advice recipient or plan at issue. A 1976 Department of Labor Advisory Opinion further limited the application of the statutory definition of ''investment advice'' by stating that valuations of employer securities in connection with employee stock ownership plan (ESOP) purchases would not be considered fiduciary advice.[6]

As the marketplace for financial services has developed in the years since 1975, the five-part test may now undermine, rather than promote, the statutes' text and purposes. The narrowness of the 1975 regulation allows professional advisers, consultants and valuation firms to play a central role in shaping plan investments, without ensuring the accountability that Congress intended for persons having such influence and responsibility when it enacted ERISA and the related Code provisions. Even when plan sponsors, participants, beneficiaries and IRA owners clearly rely on paid consultants for impartial guidance, the regulation allows consultants to avoid fiduciary status and the accompanying fiduciary obligations of care and prohibitions on disloyal and conflicted transactions. As a consequence, these advisers can steer customers to investments based on their own self-interest, give imprudent advice, and engage in transactions that would otherwise be categorically prohibited by ERISA and Code, without any liability under ERISA or the Code.

In the Department's Proposed Regulation defining a fiduciary under ERISA section 3(21)(A)(ii) and Code section 4975(e)(3)(B), the Department seeks to replace the existing regulation with one that more appropriately distinguishes between the sorts of advice relationships that should be treated as fiduciary in nature and those that should not, in light of the legal framework and financial marketplace in which plans and IRAs currently operate.[7] Under the Proposed Regulation, plans include IRAs.

The Proposed Regulation describes the types of advice that constitute ''investment advice'' with respect to plan or IRA assets for purposes of the definition of a fiduciary at ERISA section 3(21)(A)(ii) and Code section 4975(e)(3)(B). The proposal provides, subject to certain carve-outs, that a person renders investment advice with respect to a plan or IRA if, among other things, the person provides, directly to a plan, a plan fiduciary, a plan participant or beneficiary, IRA or IRA owner one of the following types of advice:

(1) A recommendation as to the advisability of acquiring, holding, disposing or exchanging securities or other property, including a recommendation to take a distribution of benefits or a recommendation as to the investment of securities or other property to be rolled over or otherwise distributed from a plan or IRA;

(2) A recommendation as to the management of securities or other property, including recommendations as to the management of securities or other property to be rolled over or otherwise distributed from the plan or IRA;

(3) An appraisal, fairness opinion or similar statement, whether verbal or written, concerning the value of securities or other property, if provided in connection with a specific transaction or transactions involving the acquisition, disposition or exchange of such securities or other property by the plan or IRA; and

(4) A recommendation of a person who is also going to receive a fee or other compensation for providing any of the types of advice described in paragraphs (1) through (3), above.

In addition, to be a fiduciary, such person must either (1) represent or acknowledge that it is acting as a fiduciary within the meaning of ERISA or the Code with respect to the advice, or (2) render the advice pursuant to a written or verbal agreement, arrangement or understanding that the advice is individualized to, or that such advice is specifically directed to, the advice recipient for consideration in making investment or management decisions with respect to securities or other property of the plan or IRA.

For advisers who do not represent that they are acting as ERISA or Code fiduciaries, the Proposed Regulation provides that advice rendered in conformance with certain carve-outs will not cause the adviser to be treated as a fiduciary under ERISA or the Code. For example, under the ''seller's carve-out,'' counterparties in arm's length transactions with plans may make investment recommendations without acting as fiduciaries if certain conditions are met.[8] Similarly, the proposal contains a carve-out from the fiduciary status for providers of appraisals, fairness opinions, or statements of value in specified contexts (*e.g.,* with respect to ESOP transactions). The proposal additionally carves out from fiduciary status the marketing of investment alternative platforms, certain assistance in selecting investment alternatives and other activities. Finally, the Proposed Regulation contains a carve-out from fiduciary status for the provision of investment education.

Prohibited Transactions

The Department anticipates that the Proposed Regulation will cover many broker-dealers who do not currently consider themselves to be fiduciaries under ERISA or the Code. If the Proposed Regulation is adopted, these entities will become subject to the prohibited transaction restrictions in ERISA and the Code that apply to fiduciaries. The lending of money or other extension of credit between a fiduciary and a plan or IRA, and the plan's or IRA's payment of compensation to the fiduciary in return may be prohibited by ERISA section 406(a)(1)(B) and Code section 4975(c)(1)(B) and (D).

As relevant to this notice, the Department understands that broker-dealers can be required, as part of their relationships with clearing houses, to complete securities transactions entered into by the broker-dealer's customers, even if a particular customer does not perform on its obligations. If a broker-dealer is required to advance funds to settle a trade entered into by a plan or IRA, or purchase a security for delivery on behalf of a plan or IRA, the result can potentially be viewed as a loan of money or other extension of credit to the plan or IRA. Further, in the event a broker-dealer steps into a plan's or IRA's shoes in any particular transaction, it may charge interest or other fees to the plan or IRA. These transactions potentially violate ERISA section 406(a)(1)(B) and Code section 4975(c)(1)(B) and (D).

[6] Advisory Opinion 76–65A (June 7, 1976).

[7] The Department initially proposed an amendment to its regulation under ERISA section 3(21)(A)(ii) and Code section 4975(e)(3)(B) on October 22, 2010, at 75 FR 65263. It subsequently announced its intention to withdraw the proposal and propose a new rule, consistent with the President's Executive Orders 12866 and 13563, in order to give the public a full opportunity to evaluate and comment on the new proposal and updated economic analysis.

[8] Although the preamble adopts the phrase ''seller's carve-out'' as a shorthand way of referring to the carve-out and its terms, the regulatory carve-out is not limited just to sellers but rather applies more broadly to counterparties in arm's length transactions with plan investors with financial expertise.

Prohibited Transaction Exemptions

ERISA and the Code counterbalance the broad proscriptive effect of the prohibited transaction provisions with numerous statutory exemptions. For example, ERISA section 408(b)(14) and Code section 4975(d)(17) specifically exempt transactions resulting from the provision of fiduciary investment advice to a participant or beneficiary of an individual account plan or IRA owner, including extensions of short term credit for settlements of securities trades, where the advice, resulting transaction, and the adviser's fees meet certain conditions. The Secretary of Labor may grant administrative exemptions under ERISA and the Code on an individual or class basis if the Secretary finds that the exemption is (1) administratively feasible, (2) in the interests of plans, their participants and beneficiaries and IRA owners, and (3) protective of the rights of the participants and beneficiaries of such plans and IRA owners.

Over the years, the Department has granted several conditional class exemptions from the prohibited transactions provisions of ERISA and the Code. The Department has, for example, permitted investment advice fiduciaries to receive compensation from a plan or IRA (*i.e.,* a commission) for executing or effecting securities transactions as agent for the plan.[9] Elsewhere in this issue of the **Federal Register**, a new ''Best Interest Contract Exemption'' is proposed for the receipt of compensation by fiduciaries who provide investment advice to IRAs, plan participants, and certain small plans. Receipt by fiduciaries of compensation that varies, or compensation from third parties, as a result of advice to plans, would otherwise violate ERISA section 406(b) and Code section 4975(c). As part of the re-proposal of the regulation defining a fiduciary, the Department is proposing to condition these existing and newly-proposed exemptions on the fiduciary's commitment to adhere to certain impartial professional conduct standards; in particular, when providing investment advice that results in varying or third-party compensation, investment advice fiduciaries will be required to act in the best interest of the plans and IRAs they are advising.

The class exemptions described above do not provide relief for any extensions of credit that may be related to a plan's or IRA's investment transactions. PTE 75–1, Part V,[10] permits such an extension of credit to a plan or IRA by a broker-dealer in connection with the purchase or sale of securities. Specifically, the Department has acknowledged that the exemption is available for extensions of credit for: the settlement of securities transactions; short sales of securities; the writing of option contracts on securities, and purchasing of securities on margin.[11]

Relief under PTE 75–1, Part V, is limited in that the broker-dealer extending credit may not have or exercise any discretionary authority or control (except as a directed trustee) with respect to the investment of the plan or IRA assets involved in the transaction, *nor render investment advice within the meaning of 29 CFR 2510.3–21(c) with respect to those plan assets,* unless no interest or other consideration is received by the broker-dealer or any affiliate of the broker-dealer in connection with the extension of credit. Therefore, broker-dealers that are deemed fiduciaries under the amended regulation would not be able to receive compensation for extending credit under PTE 75–1, Part V.

As part of its development of the Proposed Regulation, the Department has considered public input indicating the need for additional prohibited transaction exemptions for investment advice fiduciaries. The Department was informed that relief was needed for broker-dealers to extend credit to plans and IRAs to avoid failed securities transactions, and to receive compensation in return. In the Department's view, the extension of credit to avoid a failed securities transaction falls within the contours of the existing relief provided by PTE 75–1, Part V, for extensions of credit ''[i]n connection with the purchase or sale of securities.'' Accordingly, broker-dealers that are not fiduciaries may receive compensation for extending credit to avoid a failed securities transaction. The Department is proposing this amendment to extend such relief to investment advice fiduciaries.

Description of the Proposal

This proposed amendment would add a new Section (c) to PTE 75–1, Part V, that would provide an exception to the requirement that fiduciaries not receive compensation under the exemption. Section (c) would provide that a fiduciary within the meaning of ERISA section 3(21)(A)(ii) or Code section 4975(e)(3)(B) may receive reasonable compensation for extending credit to a plan or IRA to avoid a failed purchase or sale of securities involving the plan or IRA.

In conjunction with such relief, Section (c) includes several conditions. First, the potential failure of the purchase or sale of the securities may not be the result of the action or inaction by the broker-dealer or any affiliate.[12] Additionally, the terms of the extension of credit must be at least as favorable to the plan or IRA as the terms available in an arm's length transaction between unaffiliated parties.

Finally, the plan or IRA must receive written disclosure of certain terms prior to the extension of credit. This disclosure does not need to be made on a transaction by transaction basis, and can be part of an account opening agreement or a master agreement. The disclosure must include the rate of interest or other fees that will be charged on such extension of credit, and the method of determining the balance upon which interest will be charged. The plan or IRA must additionally be provided with prior written disclosure of any changes to these terms.

The required disclosures are intended to be consistent with the requirements of Securities and Exchange Act Rule 10b–16,[13] which governs broker-dealers' disclosure of credit terms in margin transactions. The Department understands that it is the practice of many broker-dealers to provide such disclosures to all customers, regardless of whether the customer is presently opening a margin account. To the extent such disclosure is provided, the disclosure terms of the proposed exemption would be satisfied.

The proposal would define the term ''IRA'' as any trust, account or annuity described in Code section 4975(e)(1)(B) through (F), including, for example, an individual retirement account described in section 408(a) of the Code and a health savings account described in section 223(d) of the Code.[14] The

[9] *See* PTE 86–128, Exemption for Securities Transactions Involving Employee Benefit Plans and Broker-Dealers, 51 FR 41686 (November 18, 1986), as amended, 67 FR 64137 (October 17, 2002).

[10] 40 FR 50845 (October 31, 1975), as amended, 71 FR 5883 (February 3, 2006).

[11] *See* Preamble to PTE 75–1, Part V, 40 FR 50845 (Oct. 31, 1975); ERISA Advisory Opinion 86–12A (March 19, 1986).

[12] Because of this limitation, the Department views it as unnecessary to condition this exemption on the fiduciary's adherence to the impartial conduct standards, including the best interest standard, that are incorporated into the newly proposed exemptions and proposed amendments to other existing exemptions.

[13] 17 CFR 240.10b-16.

[14] The Department has previously determined, after consulting with the Internal Revenue Service, that plans described in 4975(e)(1) of the Code are included within the scope of relief provided by PTE 75–1 because it was issued jointly by the Department and the Service. *See* PTE 2002–13, 67 FR 9483 (March 1, 2002) (preamble discussion). For simplicity and consistency with the other new proposed exemptions and proposed amendments to other existing exemptions published elsewhere in

proposed amendment also would revise the recordkeeping provisions of the exemption to require the broker-dealer engaging in the covered transaction, as opposed to the plan or IRA, to maintain the records. The proposed revision to the recordkeeping requirement would make it consistent with other existing class exemptions as well as the recordkeeping provisions of the other notices of proposed exemption published in this issue of the **Federal Register**.

Applicability Date

The Department is proposing that compliance with the final regulation defining a fiduciary under ERISA section 3(21)(A)(ii) and Code section 4975(e)(3)(B) will begin eight months after the publication of the final regulation in the **Federal Register** (Applicability Date). The Department proposes to make this amendment, if granted, applicable on the Applicability Date.

No Relief Proposed From ERISA Section 406(a)(1)(C) or Code Section 4975(c)(1)(C) for the Provision of Services

If the proposed amendment is granted, the exemption will not provide relief from a transaction prohibited by ERISA section 406(a)(1)(C), or from the taxes imposed by Code section 4975(a) and (b) by reason of Code section 4975(c)(1)(C), regarding the furnishing of goods, services or facilities between a plan and a party in interest or between an IRA and a disqualified person. The provision of investment advice to a plan or IRA is a service to the plan or IRA and compliance with this exemption will not relieve an investment advice fiduciary of the need to comply with ERISA section 408(b)(2), Code section 4975(d)(2), and applicable regulations thereunder.

Paperwork Reduction Act Statement

As part of its continuing effort to reduce paperwork and respondent burden, the Department of Labor conducts a preclearance consultation program to provide the general public and Federal agencies with an opportunity to comment on proposed and continuing collections of information in accordance with the Paperwork Reduction Act of 1995 (PRA) (44 U.S.C. 3506(c)(2)(A)). This helps to ensure that the public understands the Department's collection instructions; respondents can provide the requested data in the desired format; reporting burden (time and financial resources) is minimized; collection instruments are clearly understood; and the Department can properly assess the impact of collection requirements on respondents.

Currently, the Department is soliciting comments concerning the proposed information collection request (ICR) included in the Proposed Amendment to Prohibited Transaction Exemption (PTE) 75–1, Part V, Exemptions from Prohibitions Respecting Certain Classes of Transactions Involving Employee Benefit Plans and Certain Broker-Dealers, Reporting Dealers and Banks, as part of its proposal to amend its 1975 rule that defines when a person who provides investment advice to an employee benefit plan or IRA becomes a fiduciary. A copy of the ICR may be obtained by contacting the PRA addressee shown below or at *http://www.RegInfo.gov.*

The Department has submitted a copy of the Proposed Amendment to PTE 75–1, Part V, to the Office of Management and Budget (OMB) in accordance with 44 U.S.C. 3507(d) for review of its information collections. The Department and OMB are particularly interested in comments that:

- Evaluate whether the collection of information is necessary for the proper performance of the functions of the agency, including whether the information will have practical utility;
- Evaluate the accuracy of the agency's estimate of the burden of the collection of information, including the validity of the methodology and assumptions used;
- Enhance the quality, utility, and clarity of the information to be collected; and
- Minimize the burden of the collection of information on those who are to respond, including through the use of appropriate automated, electronic, mechanical, or other technological collection techniques or other forms of information technology, *e.g.,* permitting electronic submission of responses.

Comments should be sent to the Office of Information and Regulatory Affairs, Office of Management and Budget, Room 10235, New Executive Office Building, Washington, DC 20503; Attention: Desk Officer for the Employee Benefits Security Administration. OMB requests that comments be received within 30 days of publication of the Proposed Investment Advice Initiative to ensure their consideration.

PRA Addressee: Address requests for copies of the ICR to G. Christopher Cosby, Office of Policy and Research, U.S. Department of Labor, Employee Benefits Security Administration, 200 Constitution Avenue NW., Room N–5718, Washington, DC 20210. Telephone (202) 693–8410; Fax: (202) 219–5333. These are not toll-free numbers. ICRs submitted to OMB also are available at *http://www.RegInfo.gov.*

As discussed in detail below, Section (c)(3) of the proposed amendment requires that prior to the extension of credit, the plan must receive from the fiduciary written disclosure of (i) the rate of interest (or other fees) that will apply and (ii) the method of determining the balance upon which interest will be charged in the event that the fiduciary extends credit to avoid a failed purchase or sale of securities, as well as prior written disclosure of any changes to these terms. Section (d) requires broker-dealers engaging in the transactions to maintain records demonstrating compliance with the conditions of the PTE. These requirements are information collection requests (ICRs) subject to the Paperwork Reduction Act.

The Department believes that the disclosure requirement is consistent with the disclosure requirement mandated by the Securities and Exchange Commission (SEC) in 17 CFR 240.10b–16(1) for margin transactions. Although the SEC does not mandate any recordkeeping requirement, the Department believes that it would be a usual and customary business practice for financial institutions to maintain any records necessary to prove that required disclosures had been distributed in compliance with the SEC's rule. Therefore, the Department concludes that these ICRs produce no additional burden to the public.

General Information

The attention of interested persons is directed to the following:

(1) The fact that a transaction is the subject of an exemption under ERISA section 408(a) and Code section 4975(c)(2) does not relieve a fiduciary or other party in interest or disqualified person with respect to a plan from certain other provisions of ERISA and the Code, including any prohibited transaction provisions to which the exemption does not apply and the general fiduciary responsibility provisions of ERISA section 404 which require, among other things, that a fiduciary discharge his or her duties respecting the plan solely in the interests of the plan's participants and beneficiaries and in a prudent fashion in accordance with ERISA section 404(a)(1)(B);

(2) Before a class exemption amendment may be granted under

this issue of the **Federal Register**, the Department has proposed this specific definition of IRA.

ERISA section 408(a) and Code section 4975(c)(2), the Department must find that the class exemption as amended is administratively feasible, in the interests of the plan and of its participants and beneficiaries and IRA owners, and protective of the rights of the plan's participants and beneficiaries and IRA owners;

(3) If granted, a class exemption is applicable to a particular transaction only if the transaction satisfies the conditions specified in the class exemption; and

(4) If granted, this amended class exemption will be supplemental to, and not in derogation of, any other provisions of ERISA and the Code, including statutory or administrative exemptions and transitional rules. Furthermore, the fact that a transaction is subject to an administrative or statutory exemption is not dispositive of whether the transaction is in fact a prohibited transaction.

Proposed Amendment

Under the authority of ERISA section 408(a) and Code section 4975(c)(2), and in accordance with the procedures set forth in 29 CFR part 2570, subpart B (76 FR 66637, October 27, 2011),[15] the Department proposes to amend PTE 75–1, Part V, to read as follows:

The restrictions of section 406 of the Employee Retirement Income Security Act of 1974 (the Act) and the taxes imposed by section 4975(a) and (b) of the Internal Revenue Code of 1986 (the Code), by reason of section 4975(c)(1) of the Code, shall not apply to any extension of credit to an employee benefit plan or an individual retirement account (IRA) by a party in interest or a disqualified person with respect to the plan or IRA, provided that the following conditions are met:

(a) The party in interest or disqualified person:

(1) Is a broker or dealer registered under the Securities Exchange Act of 1934; and

(2) Does not have or exercise any discretionary authority or control (except as a directed trustee) with respect to the investment of the plan or IRA assets involved in the transaction, nor does it render investment advice (within the meaning of 29 CFR 2510.3–21) with respect to those assets, unless no interest or other consideration is received by the party in interest or disqualified person or any affiliate thereof in connection with such extension of credit.

(b) Such extension of credit:

(1) Is in connection with the purchase or sale of securities;

(2) Is lawful under the Securities Exchange Act of 1934 and any rules and regulations promulgated thereunder; and

(3) Is not a prohibited transaction within the meaning of section 503(b) of the Code.

(c) Notwithstanding section (a)(2), a fiduciary within the meaning of ERISA section 3(21)(A)(ii) or Code section 4975(e)(3)(B) may receive reasonable compensation for extending credit to a plan or IRA to avoid a failed purchase or sale of securities involving the plan or IRA if:

(1) The potential failure of the purchase or sale of the securities is not the result of action or inaction by such fiduciary or an affiliate;

(2) The terms of the extension of credit are at least as favorable to the plan or IRA as the terms available in an arm's length transaction between unaffiliated parties;

(3) Prior to the extension of credit, the plan or IRA receives written disclosure of (i) the rate of interest (or other fees) that will apply and (ii) the method of determining the balance upon which interest will be charged, in the event that the fiduciary extends credit to avoid a failed purchase or sale of securities, as well as prior written disclosure of any changes to these terms. This Section (c)(3) will be considered satisfied if the plan or IRA receives the disclosure described in the Securities and Exchange Act Rule 10b–16;[16] and

(d) The broker-dealer engaging in the covered transaction maintains or causes to be maintained for a period of six years from the date of such transaction such records as are necessary to enable the persons described in paragraph (e) of this exemption to determine whether the conditions of this exemption have been met, except that:

(1) No party other than the broker-dealer engaging in the covered transaction shall be subject to the civil penalty which may be assessed under section 502(i) of the Act, or to the taxes imposed by section 4975(a) and (b) of the Code, if such records are not maintained, or are not available for examination as required by paragraph (e) below; and

(2) A prohibited transaction will not be deemed to have occurred if, due to circumstances beyond the control of the broker-dealer, such records are lost or destroyed prior to the end of such six-year period.

(e) Notwithstanding anything to the contrary in subsections (a)(2) and (b) of section 504 of the Act, the records referred to in paragraph (d) are unconditionally available for examination during normal business hours by duly authorized employees of (1) the Department of Labor, (2) the Internal Revenue Service, (3) plan participants and beneficiaries and IRA owners, (4) any employer of plan participants and beneficiaries, and (5) any employee organization any of whose members are covered by such plan.

For purposes of this exemption, the terms ''party in interest,'' ''disqualified person'' and ''fiduciary'' shall include such party in interest, disqualified person, or fiduciary, and any affiliates thereof, and the term ''affiliate'' shall be defined in the same manner as that term is defined in 29 CFR 2510.3–21(e) and 26 CFR 54.4975–9(e). Also for the purposes of this exemption, the term ''IRA'' means any trust, account or annuity described in Code section 4975(e)(1)(B) through (F), including, for example, an individual retirement account described in section 408(a) of the Code and a health savings account described in section 223(d) of the Code.

Signed at Washington, DC, this 14th day of April, 2015.

Phyllis C. Borzi,

Assistant Secretary, Employee Benefits Security Administration, Department of Labor.

[FR Doc. 2015–08836 Filed 4–15–15; 11:15 am]

BILLING CODE 4510–29–P

[15] For purposes of this proposed amendment, references to ERISA should be read to refer as well to the corresponding provisions of the Code.

[16] 17 CFR 240.10b–16.

DEPARTMENT OF LABOR

Employee Benefits Security Administration

29 CFR Part 2550

[Application Number D–11850]

ZRIN: 1210–ZA25

Proposed Amendment to and Proposed Partial Revocation of Prohibited Transaction Exemption (PTE) 84–24 for Certain Transactions Involving Insurance Agents and Brokers, Pension Consultants, Insurance Companies and Investment Company Principal Underwriters

AGENCY: Employee Benefits Security Administration (EBSA), Department of Labor.

ACTION: Notice of Proposed Amendment to and Proposed Partial Revocation of PTE 84–24.

SUMMARY: This document contains a notice of pendency before the Department of Labor of a proposed amendment to Prohibited Transaction Exemption (PTE) 84–24, an exemption from certain prohibited transaction provisions of the Employee Retirement Income Security Act of 1974 (ERISA) and the Internal Revenue Code of 1986 (the Code). The ERISA and Code provisions at issue generally prohibit fiduciaries with respect to employee benefit plans and individual retirement accounts (IRAs) from engaging in self-dealing in connection with transactions involving these plans and IRAs. The exemption allows fiduciaries to receive compensation when plans and IRAs enter into certain insurance and mutual fund transactions recommended by the fiduciaries as well as certain related transactions. The proposed amendments would increase the safeguards of the exemption. This document also contains a notice of pendency before the Department of the proposed revocation of the exemption as it applies to IRA purchases of mutual fund shares and certain annuity contracts. The amendments and revocations would affect participants and beneficiaries of plans, IRA owners and certain fiduciaries of plans and IRAs.

DATES: *Comments:* Written comments must be received by the Department on or before July 6, 2015.

Applicability: The Department proposes to make this amendment and partial revocation applicable eight months after the publication of the final amendment and partial revocation in the **Federal Register**.

ADDRESSES: All written comments concerning the proposed amendment and proposed revocation to the class exemption should be sent to the Office of Exemption Determinations by any of the following methods, identified by ZRIN: 1210–ZA25:

Federal eRulemaking Portal: *http://www.regulations.gov* at Docket ID number: EBSA–2014–0016. Follow the instructions for submitting comments.

Email to: e-OED@dol.gov.

Fax to: (202) 693–8474.

Mail: Office of Exemption Determinations, Employee Benefits Security Administration, (Attention: D–11850), U.S. Department of Labor, 200 Constitution Avenue NW., Suite 400, Washington, DC 20210.

Hand Delivery/Courier: Office of Exemption Determinations, Employee Benefits Security Administration, (Attention: D–11850), U.S. Department of Labor, 122 C St. NW., Suite 400, Washington, DC 20001.

Instructions. All comments must be received by the end of the comment period. The comments received will be available for public inspection in the Public Disclosure Room of the Employee Benefits Security Administration, U.S. Department of Labor, Room N–1513, 200 Constitution Avenue NW., Washington, DC 20210. Comments will also be available online at *www.regulations.gov*, at Docket ID number: EBSA–2014–0016 and *www.dol.gov/ebsa*, at no charge.

Warning: All comments will be made available to the public. Do not include any personally identifiable information (such as Social Security number, name, address, or other contact information) or confidential business information that you do not want publicly disclosed. All comments may be posted on the Internet and can be retrieved by most Internet search engines.

FOR FURTHER INFORMATION CONTACT: Brian Shiker, Office of Exemption Determinations, Employee Benefits Security Administration, U.S. Department of Labor, 200 Constitution Avenue NW., Suite 400, Washington, DC 20210, (202) 693–8824 (not a toll-free number).

SUPPLEMENTARY INFORMATION: The Department is proposing the amendment to PTE 84–24 [1] on its own motion, pursuant to ERISA section 408(a) and Code section 4975(c)(2), and in accordance with the procedures set forth in 29 CFR part 2570, subpart B (76 FR 66637 (October 27, 2011)).

Public Hearing: The Department plans to hold an administrative hearing within 30 days of the close of the comment period. The Department will ensure ample opportunity for public comment by reopening the record following the hearing and publication of the hearing transcript. Specific information regarding the date, location and submission of requests to testify will be published in a notice in the **Federal Register**.

Executive Summary

Purpose of Regulatory Action

This proposal is being published in the same issue of the **Federal Register** as the Department's proposed regulation that would amend the definition of a ''fiduciary'' of an employee benefit plan or an IRA under ERISA and the Internal Revenue Code (Proposed Regulation). The Proposed Regulation specifies when an entity is a fiduciary by reason of the provision of investment advice for a fee or other compensation regarding assets of a plan or IRA. If adopted, the Proposed Regulation would replace an existing regulation that was adopted in 1975. The Proposed Regulation is intended to take into account the advent of 401(k) plans and IRAs, the dramatic increase in rollovers, and other developments that have transformed the retirement plan landscape and the associated investment market over the four decades since the existing regulation was issued. In light of the extensive changes in retirement investment practices and relationships, the Proposed Regulation would update existing rules to distinguish more appropriately between the sorts of advice relationships that should be treated as fiduciary in nature and those that should not.

PTE 84–24 permits certain investment advice fiduciaries to receive commissions in connection with the purchase and sale of recommended insurance and annuity products and mutual fund shares by the plans and IRAs, and certain related transactions. In the absence of an exemption, ERISA and the Code generally prohibit fiduciaries from using their authority to affect or increase their own compensation. This proposal would revoke the exemption for certain transactions and amend the conditions under which fiduciaries may receive such compensation.

The Secretary of Labor may grant and amend administrative exemptions from the prohibited transaction provisions of ERISA and the Code.[2] Before granting an amendment to an exemption, the Department must find that the amended exemption is administratively feasible, in the interests of plans, their participants and beneficiaries and IRA owners, and protective of the rights of participants and beneficiaries of such plans and IRA owners. Interested parties are permitted to submit comments to the Department through July 6, 2015. The Department plans to hold an administrative hearing within 30 days of the close of the comment period.

Summary of the Major Provisions

PTE 84–24 currently provides an exemption for certain prohibited transactions that occur when plans or IRAs purchase insurance and annuity contracts and shares in an investment

[1] PTE 84–24, 49 FR 13208 (Apr. 3, 1984), as corrected, 49 FR 24819 (June 15, 1984), as amended, 71 FR 5887 (Feb. 3, 2006).

[2] Regulations at 29 CFR 2570.30 to 2570.52 describe the procedures for applying for an administrative exemption under ERISA. Code section 4975(c)(2) authorizes the Secretary of the Treasury to grant exemptions from the parallel prohibited transaction provisions of the Code. Reorganization Plan No. 4 of 1978 (5 U.S.C. app. at 214 (2000)) generally transferred the authority of the Secretary of the Treasury to issue administrative exemptions under Code section 4975 to the Secretary of Labor.

company registered under the Investment Company Act of 1940 (a mutual fund). The exemption permits insurance agents, insurance brokers and pension consultants that are parties in interest or fiduciaries with respect to plans and IRAs to effect the purchase of the insurance or annuity contracts for the plans or IRAs and receive a commission on the sale. The exemption is also available for the prohibited transaction that occurs when the insurance company selling the insurance or annuity contract is a party in interest or disqualified person with respect to the plan or IRA. Likewise, with respect to mutual fund transactions, PTE 84–24 permits mutual fund principal underwriters that are parties in interest or fiduciaries to effect the sale of mutual fund shares to plans or IRAs, and receive a commission on the transaction.

This proposal would make several changes to PTE 84–24. First, it would increase the safeguards of the exemption by requiring fiduciaries that rely on the exemption to adhere to certain ''Impartial Conduct Standards,'' including acting in the best interest of the plans and IRAs when providing advice, and by more precisely defining the types of payments that are permitted under the exemption.

Second, on a going forward basis, the amendment would revoke relief for insurance agents, insurance brokers and pension consultants to receive a commission in connection with the purchase by IRAs of variable annuity contracts and other annuity contracts that are securities under federal securities laws and for mutual fund principal underwriters to receive a commission in connection with the purchase by IRAs of mutual fund shares.[3] A new exemption for the receipt of compensation by fiduciaries that provide investment advice to IRA owners is proposed elsewhere in this issue of the **Federal Register** in the ''Best Interest Contract Exemption.'' The Department believes that the provisions in the Best Interest Contract Exemption better protect the interests of IRAs with respect to investment advice regarding securities products.

[3] For purposes of this amendment, the terms ''Individual Retirement Account'' or ''IRA'' mean any trust, account or annuity described in Code section 4975(e)(1)(B) through (F), including, for example, an individual retirement account described in section 408(a) of the Code and a health savings account described in section 223(d) of the Code.

Executive Order 12866 and 13563 Statement

Under Executive Orders 12866 and 13563, the Department must determine whether a regulatory action is ''significant'' and therefore subject to the requirements of the Executive Order and subject to review by the Office of Management and Budget (OMB). Executive Orders 12866 and 13563 direct agencies to assess all costs and benefits of available regulatory alternatives and, if regulation is necessary, to select regulatory approaches that maximize net benefits (including potential economic, environmental, public health and safety effects, distributive impacts, and equity). Executive Order 13563 emphasizes the importance of quantifying both costs and benefits, of reducing costs, of harmonizing and streamlining rules, and of promoting flexibility. It also requires federal agencies to develop a plan under which the agencies will periodically review their existing significant regulations to make the agencies' regulatory programs more effective or less burdensome in achieving their regulatory objectives.

Under Executive Order 12866, ''significant'' regulatory actions are subject to the requirements of the Executive Order and review by the Office of Management and Budget (OMB). Section 3(f) of Executive Order 12866, defines a ''significant regulatory action'' as an action that is likely to result in a rule (1) having an annual effect on the economy of $100 million or more, or adversely and materially affecting a sector of the economy, productivity, competition, jobs, the environment, public health or safety, or State, local or tribal governments or communities (also referred to as ''economically significant'' regulatory actions); (2) creating serious inconsistency or otherwise interfering with an action taken or planned by another agency; (3) materially altering the budgetary impacts of entitlement grants, user fees, or loan programs or the rights and obligations of recipients thereof; or (4) raising novel legal or policy issues arising out of legal mandates, the President's priorities, or the principles set forth in the Executive Order. Pursuant to the terms of the Executive Order, OMB has determined that this action is ''significant'' within the meaning of Section 3(f)(4) of the Executive Order. Accordingly, the Department has undertaken an assessment of the costs and benefits of the proposal, and OMB has reviewed this regulatory action.

Background

As explained more fully in the preamble to the Department's Proposed Regulation on the definition of fiduciary under ERISA section 3(21)(A)(ii) and Code section 4975(e)(3)(B), also published in this issue of the **Federal Register**, ERISA is a comprehensive statute designed to protect the interests of plan participants and beneficiaries, the integrity of employee benefit plans, and the security of retirement, health, and other critical benefits. The broad public interest in ERISA-covered plans is reflected in its imposition of fiduciary responsibilities on parties engaging in important plan activities, as well as in the tax-favored status of plan assets and investments. One of the chief ways in which ERISA protects employee benefit plans is by requiring that plan fiduciaries comply with fundamental obligations rooted in the law of trusts. In particular, plan fiduciaries must manage plan assets prudently and with undivided loyalty to the plans and their participants and beneficiaries.[4] In addition, they must refrain from engaging in ''prohibited transactions,'' which ERISA does not permit because of the dangers posed by the fiduciaries' conflicts of interest with respect to the transactions.[5] When fiduciaries violate ERISA's fiduciary duties or the prohibited transaction rules, they may be held personally liable for the breach.[6] In addition, violations of the prohibited transaction rules are subject to excise taxes under the Code.

The Code also has rules regarding fiduciary conduct with respect to tax-favored accounts that are not generally covered by ERISA, such as IRAs. Although ERISA's general fiduciary obligations of prudence and loyalty do not govern the fiduciaries of IRAs, these fiduciaries are subject to the prohibited transaction rules. In this context fiduciaries engaging in the prohibited transactions are subject to an excise tax enforced by the Internal Revenue Service. Unlike participants in plans covered by Title I of ERISA, under the Code, IRA owners cannot bring suit against fiduciaries under ERISA for violation of the prohibited transaction rules and fiduciaries are not personally liable to IRA owners for the losses caused by their misconduct. Elsewhere in this issue of the **Federal Register**, however, the Department is proposing two new class exemptions that would create contractual obligations for the

[4] ERISA section 404(a).

[5] ERISA section 406. ERISA also prohibits certain transactions between a plan and a ''party in interest.''

[6] ERISA section 409; *see also* ERISA section 405.

adviser to adhere to certain standards (the Impartial Conduct Standards). IRA owners would have a right to enforce these new contractual obligations.

Under this statutory framework, the determination of who is a ''fiduciary'' is of central importance. Many of ERISA's and the Code's protections, duties, and liabilities hinge on fiduciary status. In relevant part, section 3(21)(A) of ERISA and section 4975(e)(3) of the Code provide that a person is a fiduciary with respect to a plan or IRA to the extent he or she (1) exercises any discretionary authority or discretionary control with respect to management of such plan or IRA, or exercises any authority or control with respect to management or disposition of its assets; (2) renders investment advice for a fee or other compensation, direct or indirect, with respect to any moneys or other property of such plan or IRA, or has any authority or responsibility to do so; or, (3) has any discretionary authority or discretionary responsibility in the administration of such plan or IRA.

ERISA section 406(a)(1)(A)–(D) and Code section 4975(c)(1)(A)–(D) prohibit certain transactions between plans or IRAs and ''parties in interest,'' as defined in ERISA section 3(14), or ''disqualified persons,'' as defined in Code section 4975(e)(2). Fiduciaries and other service providers are parties in interest and disqualified persons under ERISA and the Code. As a result, they are prohibited from engaging in (1) the sale, exchange or leasing of property with a plan or IRA, (2) the lending of money or other extension of credit to a plan or IRA, (3) the furnishing of goods, services or facilities to a plan or IRA and (4) the transfer to or use by or for the benefit of a party in interest of plan assets.

ERISA section 406(b) and Code section 4975(c)(1)(E) and (F) are aimed at fiduciaries only. These provisions generally prohibit a fiduciary from dealing with the income or assets of a plan or IRA in his or her own interest or his or her own account and from receiving payments from third parties in connection with transactions involving the plan or IRA. Parallel regulations issued by the Departments of Labor and the Treasury explain that these provisions impose on fiduciaries of plans and IRAs a duty not to act on conflicts of interest that may affect the fiduciary's best judgment on behalf of the plan or IRA. Under these provisions, a fiduciary may not cause a plan or IRA to pay an additional fee to such fiduciary, or to a person in which such fiduciary has an interest that may affect the exercise of the fiduciary's best judgment.

In the Department's view, the receipt of a commission on the sale of an insurance or annuity contract or mutual fund shares by a fiduciary that recommended the investment violates the prohibited transaction provisions of ERISA section 406(b) and Code section 4975(c)(1)(E) and (F). The effecting of the sale by a fiduciary or service provider is a service, potentially in violation of ERISA section 406(a)(1)(C) and Code section 4975(c)(1)(C). Finally, the purchase of an insurance or annuity contract by a plan or IRA from an insurance company that is a fiduciary, service provider or other party in interest or disqualified person, violates ERISA section 406(a)(1)(A) and (D) and Code section 4975(c)(1)(A) and (D).

PTE 84–24 provides an exemption for these transactions for the following parties: insurance agents, insurance brokers, pension consultants, insurance companies and mutual fund principal underwriters. Currently, PTE 84–24 provides relief to these parties in connection with transactions involving both employee benefit plans, as defined in ERISA section 3(3), as well as IRAs and other plans described in Code section 4975, such as Archer MSAs described in Code section 220(d), health savings accounts described in Code section 223(d) and Coverdell education savings accounts described in Code section 530.[7]

Specifically, PTE 84–24 permits insurance agents, insurance brokers and pension consultants to receive, directly or indirectly, a commission for selling insurance or annuity contracts to plans and IRAs. The exemption also permits the purchase by plans and IRAs of insurance and annuity contracts from insurance companies that are parties in interest or disqualified persons. The term ''insurance and annuity contract'' includes variable annuities.[8]

In the area of mutual fund transactions, PTE 84–24 permits the mutual fund's principal underwriter to receive commissions in connection with a plan's or IRA's purchase of mutual fund shares. The term ''principal underwriter'' is defined in the same manner as it is defined in section 2(a)(29) of the Investment Company Act of 1940 (15 U.S.C. 80a–2(a)(29)).[9]

PTE 84–24 contains conditions under which the transactions must occur in order for the exemption to apply. Generally, the exemption requires that the transaction involving the insurance or annuity contract or mutual fund shares be effected by the insurance agent, insurance broker, insurance company, pension consultant or mutual fund principal underwriter in the ordinary course of its business. The terms of the transaction must be at least as favorable to the plan or IRA as an arm's length transaction, and the party relying on the exemption must receive no more than reasonable compensation.

Additionally, the exemption restricts the parties that may use the exemption. Accordingly, the insurance agent, insurance broker, pension consultant, insurance company or investment company principal underwriter, and their affiliates, may not be a plan administrator (within the meaning of ERISA section 3(16) and Code section 414(g)), or an employer of employees covered by the plan.

Further, the insurance agent, insurance broker, pension consultant, insurance company or investment company principal underwriter may not be a trustee of the plan (other than a nondiscretionary trustee who does not render investment advice with respect to any assets of the plan) or a fiduciary who is expressly authorized in writing to manage, acquire or dispose of the assets of the plan on a discretionary basis (*i.e.*, an investment manager). However, these entities may be affiliated with discretionary trustees or investment managers if the trustee or investment manager affiliate has no discretionary authority or control over the plan assets involved in the transaction other than as a nondiscretionary trustee.

The exemption requires that certain disclosures be made to an independent fiduciary of the plan or IRA, following which the independent fiduciary must approve the transaction. In the case of the purchase of an insurance or annuity contract, the insurance agent, insurance broker or pension consultant must disclose its relationship with the insurance company, the sales commission it will receive (including for renewal years), and a description of any charges, fees, discounts, penalties or

[7] *See* PTE 2002–13, 67 FR 9483 (March 1, 2002) (preamble discussion of certain exemptions, including PTE 84–24, that apply to plans described in Code section 4975).

[8] *See* PTE 77–9, 42 FR 32395 (June 24, 1977) (predecessor to PTE 84–24).

[9] The exemption also provides relief for: (1) The purchase, with plan assets, of an insurance or annuity contract from an insurance company which is a fiduciary or a service provider (or both) with respect to the plan solely by reason of the sponsorship of a master or prototype plan, and (2) The purchase, with plan assets, of mutual fund shares from, or the sale of such securities to, a mutual fund or mutual fund principal underwriter, when such mutual fund or its principal underwriter or investment adviser is a fiduciary or a service provider (or both) with respect to the plan solely by reason of: the sponsorship of a master or prototype plan or the provision of nondiscretionary trust services to the plan; or both.

adjustments which may be imposed under the recommended contract in connection with the purchase, holding, exchange, termination or sale of such contract.

In the case of mutual fund shares, the principal underwriter similarly must disclose its relationship with the mutual fund, the sales commission it will receive, a description of any charges, fees, discounts, penalties, or adjustments which may be imposed under the recommended mutual fund shares in connection with the purchase, holding, exchange, termination or sale of such shares.

If granted, this proposal would make changes, discussed below, to PTE 84–24, as well as a re-ordering of the sections of the exemption and the definitions set forth in the exemption.

Description of the Proposal

I. Impartial Conduct Standards

This proposal would amend PTE 84–24 to require insurance agents, insurance brokers, pension consultants, insurance companies and mutual fund principal underwriters that are fiduciaries engaging in the exempted transactions to adhere to certain Impartial Conduct Standards. The Impartial Conduct Standards are set forth in a new proposed Section II.

Under the first conduct standard, the insurance agent, insurance broker, pension consultant, insurance company or mutual fund principal underwriter would be required to act in the plan's or IRA's best interest when providing investment advice regarding the purchase of the insurance or annuity contract or mutual fund shares. Best interest is defined as acting with the care, skill, prudence, and diligence under the circumstances then prevailing that a prudent person would exercise based on the investment objectives, risk tolerance, financial circumstances, and the needs of the plan or IRA. Further, under the best interest standard, the insurance agent, insurance broker, pension consultant, insurance company or mutual fund principal underwriter must act without regard to its own financial or other interests or those of any affiliate or other party. Under this standard, the fiduciary must put the interests of the plan or IRA ahead of the fiduciary's own financial interests or those of its affiliates or any other party.

In this regard, the Department notes that while fiduciaries of plans covered by ERISA are subject to the ERISA section 404 standards of prudence and loyalty, the Code contains no provisions that hold IRA fiduciaries to these standards. However, as a condition of relief under the proposed amendment, both IRA and plan fiduciaries would have to uphold the best interest and other Impartial Conduct Standards set forth in Section II. The best interest standard is defined to effectively mirror the ERISA section 404 duties of prudence and loyalty, as applied in the context of fiduciary investment advice.

The second conduct standard requires that the statements by the insurance agent, insurance broker, pension consultant, insurance company or mutual fund principal underwriter about recommended investments, fees, material conflicts of interest, and any other matters relevant to a plan's or IRA owner's investment decisions, are not misleading. For this purpose, the failure to disclose a material conflict of interest relevant to the services the entity is providing or other actions it is taking in relation to a plan's or IRA owner's investment decisions is deemed to be a misleading statement. Transactions that violate the requirements are not likely to be in the interests of or protective of plans and their participants and beneficiaries and IRA owners.

Unlike the new exemption proposals published elsewhere in the **Federal Register**, the Impartial Conduct Standards proposed herein do not include a requirement that the compensation received by the fiduciary and affiliates be reasonable. Such a requirement already exists under Section IV(c) of the exemption, and is therefore unnecessary in Section II.

Additionally, unlike the new exemption proposals, this proposed amendment does not require fiduciaries to contractually warrant compliance with applicable federal and state laws. However, the Department notes that significant violations of applicable federal or state law could also amount to violations of the Impartial Conduct Standards, such as the best interest standard, in which case, this exemption, as amended, would be deemed unavailable for transactions occurring in connection with such violations.

II. IRAs

Since PTE 84–24 was initially granted,[10] the amount of assets held in IRAs has grown dramatically. The financial services marketplace has become more complex, and compensation structures and the types of products offered have changed significantly beyond what the Department contemplated at the time. The fact that IRA owners generally do not benefit from the protections afforded by the fiduciary duties owed by plan sponsors to their employee benefit plans makes it all the more critical that their interests are protected by appropriate conditions in the Department's exemptions.

In connection with the Department's Proposed Regulation on the definition of fiduciary the Department has also proposed, elsewhere in this issue of the **Federal Register**, new class exemptions applicable to investment advice fiduciaries. The proposed ''Best Interest Contract Exemption'' would permit investment advice fiduciaries to receive compensation in a broad range of transactions commonly entered into by retail retirement investors (plan participants and beneficiaries, IRA owners and small plan sponsors) including investment in stocks, bonds, mutual funds and insurance and annuity contracts, and it contains safeguards specifically crafted for these investors.

The Best Interest Contract Exemption would require investment advice fiduciaries—including both the individual adviser and the firm that the adviser is employed by or otherwise the agent of—to contractually acknowledge fiduciary status, commit to adhere to basic standards of impartial conduct, adopt policies and procedures reasonably designed to minimize the harmful impact of conflicts of interest, and disclose basic information on their conflicts of interest. As a result, the exemption ensures that IRA owners have a contract-based claim to hold their fiduciary investment advisers accountable if they violate basic obligations of prudence and loyalty. Additionally, the Best Interest Contract Exemption would require detailed disclosure of fees associated with investments and the compensation received by investment advice fiduciaries in connection with the transactions.

As the Best Interest Contract Exemption was designed for IRA owners and other investors that rely on fiduciary investment advisers in the retail marketplace, the Department believes that some of the transactions involving IRAs that are currently permitted under PTE 84–24 should instead occur under the conditions of the Best Interest Contract Exemption, specifically, transactions involving variable annuity contracts and other annuity contracts that are securities under federal securities laws, and mutual fund shares. Therefore, this proposal would revoke relief in PTE 84–24 for such transactions. This change is

[10] PTE 84–24 was preceded by PTE 77–9, 42 FR 32395 (June 24, 1977), as corrected, 42 FR 33817 (July 1, 1977), and as amended, 44 FR 1479 (Jan. 5, 1979) and 44 FR 52365 (Sept. 7, 1979).

reflected in a proposed new Section I(b), setting forth the scope of the exemption. On the other hand, the Department has determined that transactions involving insurance and annuity contracts that are not securities can continue to occur under this exemption, with the added protections of the Impartial Conduct Standards.

In this proposal, therefore, the Department has distinguished between transactions that involve securities and those that involve insurance products that are not securities. The Department believes that annuity contracts that are securities and mutual fund shares are distributed through the same channels as many other investments covered by the Best Interest Contract Exemption, and such investment products all have similar disclosure requirements under existing regulations. In that respect, the conditions of the proposed Best Interest Contract Exemption are appropriately tailored for such transactions.

The Department is not certain that the conditions of the Best Interest Contract Exemption, including some of the disclosure requirements, would be readily applicable to insurance and annuity contracts that are not securities, or that the distribution methods and channels of insurance products that are not securities would fit within the exemption's framework. While the Best Interest Contract Exemption will be available for such products, the Department is seeking comment in that proposal on a number of issues related to use of that exemption for such insurance and annuity products.

The Department requests comment on this approach. In particular, the Department requests comment on whether the proposal to revoke relief for securities transactions involving IRAs (*i.e.*, annuities that are securities and mutual funds) but leave in place relief for IRA transactions involving insurance and annuity contracts that are not securities strikes the appropriate balance and is protective of the interests of the IRAs.

III. Commissions

While PTE 84–24 provides an exemption for the specified parties to receive commissions in connection with the purchase of the insurance or annuity contracts and mutual fund shares, it does not currently contain a definition of commission. To provide certainty with respect to the payments permitted by the exemption, specific definitions for both (1) insurance commissions and (2) mutual fund commissions are now proposed in Section VI.

Section VI(f) would define an insurance commission to mean a sales commission paid by the insurance company or an affiliate to the insurance agent, insurance broker or pension consultant for the service of effecting the purchase or sale of an insurance or annuity contract, including renewal fees and trailers that are paid in connection with the purchase or sale of the insurance or annuity contract. As proposed, insurance commissions would not include revenue sharing payments, administrative fees or marketing fees. Additionally, the term does not include payments from parties other than the insurance company or its affiliates, and it does not include payments that result from the underlying investments that are held pursuant to the insurance contract, such as payments derived from a variable annuity's investments.

Section VI(i) would define a mutual fund commission to mean a commission or sales load paid either by the plan or the mutual fund for the service of effecting or executing the purchase or sale of mutual fund shares, but not a 12b–1 fee, revenue sharing payment, administrative fee or marketing fee.

IV. Recordkeeping Requirements

A new proposed Section V to PTE 84–24 would require the fiduciary engaging in a transaction covered by the exemption to maintain records necessary to enable certain persons (described in proposed Section V(b)) to determine whether the conditions of this exemption have been met. This requirement would replace the more limited existing recordkeeping requirement in Section V(e). The proposed recordkeeping requirement is consistent with other existing class exemptions as well as the recordkeeping provisions of the other notices of proposed exemption published in this issue of the **Federal Register**, and is intended to be protective of rights of plan participants and beneficiaries and IRA owners by ensuring they and the Department can confirm the exemption has been satisfied.

V. Other

Finally, the proposed amendment makes several minor changes in order to update PTE 84–24. The definitions have been reordered in alphabetical order for ease of use. Section I has been deleted because retroactive relief is no longer necessary, and Section II and III have been combined in order to increase readability and clarity. Finally, the term ''Act'' has been replaced with ''ERISA'' to reflect modern usage.

Applicability Date

The Department is proposing that compliance with the final regulation defining a fiduciary under ERISA section 3(21)(A)(ii) and Code section 4975(e)(3)(B) will begin eight months after publication of the final regulation in the **Federal Register** (Applicability Date). The Department proposes to make the amendments to and partial revocation of this exemption, if granted, applicable on the Applicability Date.

Paperwork Reduction Act Statement

As part of its continuing effort to reduce paperwork and respondent burden, the Department of Labor conducts a preclearance consultation program to provide the general public and Federal agencies with an opportunity to comment on proposed and continuing collections of information in accordance with the Paperwork Reduction Act of 1995 (PRA) (44 U.S.C. 3506(c)(2)(A)). This helps to ensure that the public understands the Department's collection instructions, respondents can provide the requested data in the desired format, reporting burden (time and financial resources) is minimized, collection instruments are clearly understood, and the Department can properly assess the impact of collection requirements on respondents.

Currently, the Department is soliciting comments concerning the proposed information collection request (ICR) included in the Proposed Amendment to and Proposed Partial Revocation of Prohibited Transaction Exemption (PTE) 84–24 for Certain Transactions Involving Insurance Agents and Brokers, Pension Consultants, Insurance Companies, and Investment Company Principal Underwriters as part of its proposal to amend its 1975 rule that defines when a person who provides investment advice to an employee benefit plan or IRA becomes a fiduciary. A copy of the ICR may be obtained by contacting the PRA addressee shown below or at *http://www.RegInfo.gov.*

The Department has submitted a copy of the proposed amendment to and proposed partial revocation of PTE 84–24 to the Office of Management and Budget (OMB) in accordance with 44 U.S.C. 3507(d) for review of its information collections. The Department and OMB are particularly interested in comments that:

- Evaluate whether the collection of information is necessary for the proper performance of the functions of the agency, including whether the information will have practical utility;
- Evaluate the accuracy of the agency's estimate of the burden of the

collection of information, including the validity of the methodology and assumptions used;

• Enhance the quality, utility, and clarity of the information to be collected; and

• Minimize the burden of the collection of information on those who are to respond, including through the use of appropriate automated, electronic, mechanical, or other technological collection techniques or other forms of information technology, *e.g.,* permitting electronic submission of responses.

Comments should be sent to the Office of Information and Regulatory Affairs, Office of Management and Budget, Room 10235, New Executive Office Building, Washington, DC 20503; Attention: Desk Officer for the Employee Benefits Security Administration. OMB requests that comments be received within 30 days of publication of the Proposed Amendments to ensure their consideration.

PRA Addressee: Address requests for copies of the ICR to G. Christopher Cosby, Office of Policy and Research, U.S. Department of Labor, Employee Benefits Security Administration, 200 Constitution Avenue NW., Room N–5718, Washington, DC 20210. Telephone (202) 693–8410; Fax: (202) 219–5333. These are not toll-free numbers. ICRs submitted to OMB also are available at *http://www.RegInfo.gov.*

As discussed in detail below, PTE 84–24, as amended, would require insurance agents and brokers, pension consultants, insurance companies, and investment company Principal Underwriters to make certain disclosures to and receive an advance written authorization from plan fiduciaries in order to receive relief from ERISA's and the Code's prohibited transaction rules for the receipt of compensation when plans enter into certain insurance and mutual fund transactions recommended by the fiduciaries. The proposed amendment would require insurance agents and brokers, pension consultants, insurance companies, and investment company Principal Underwriters relying on PTE 84–24 to maintain records necessary to prove that the conditions of the exemption have been met. These requirements are information collection requests (ICRs) subject to the Paperwork Reduction Act.

The Department has made the following assumptions in order to establish a reasonable estimate of the paperwork burden associated with these ICRs:

• 38% of disclosures to and advance authorizations from plans, as well as 50% of disclosures to and advance authorizations from IRAs will be distributed electronically via means already used by respondents in the normal course of business and the costs arising from electronic distribution will be negligible;

• Insurance agents and brokers, pension consultants, insurance companies, investment company Principal Underwriters, and plans will use existing in-house resources to prepare the legal authorizations and disclosures, and maintain the recordkeeping systems necessary to meet the requirements of the exemption;

• A combination of personnel will perform the tasks associated with the ICRs at an hourly wage rate of $125.95 for a financial manager, $30.42 for clerical personnel, and $129.94 for a legal professional; and [11]

• Eight percent of plans and nine percent of IRAs have relationships with insurance agents and brokers, pension consultants, and insurance companies.

• Approximately 1,300 insurance agents and brokers, pension consultants, and insurance companies will take advantage of this exemption with all of their client plans and IRAs.[12]

• Ten investment company Principal Underwriters will take advantage of this exemption and each will do so once with one client plan annually.[13]

Disclosures and Consent Forms

In order to receive commissions in conjunction with the purchase of insurance or annuity contracts, section IV(b) of PTE 84–24 as amended requires the insurance agent or broker or pension consultant to obtain advance written authorization from a plan fiduciary or IRA holder independent of the insurance company (the independent fiduciary) following certain disclosures, including: if the agent, broker, or consultant is an Affiliate of the insurance company whose contract is being recommended, or if the ability of the agent, broker, or consultant to recommend insurance or annuity contracts is limited by any agreement with the insurance company, the nature of the affiliation, limitation, or relationship; the insurance commission; and a description of any charges, fees, discounts, penalties, or adjustments which may be imposed under the recommended contract.

In order to receive commissions in conjunction with the purchase of securities issued by an investment company, section IV(c) of PTE 84–24 as amended requires the investment company Principal Underwriter to obtain approval from an independent plan fiduciary following certain disclosures: if the person recommending securities issued by an investment company is the Principal Underwriter of the investment company whose securities are being recommended, the nature of the relationship and of any limitation it places upon the Principal Underwriter's ability to recommend investment company securities; the commission; and a description of any charges, fees, discounts, penalties, or adjustments which may be imposed under the recommended securities in connection with the purchase, holding, exchange, termination, or sale of the securities. Unless facts or circumstances would indicate the contrary, the approval required under section IV(c) may be presumed if the independent plan fiduciary permits the transaction to proceed after receipt of the written disclosure.

Legal Costs

According to 2012 Annual Return/Report of Employee Benefit (Form 5500) data and Internal Revenue Service Statistics of Income data, the Department estimates that there are approximately 677,000 ERISA covered pension plans and approximately 54.5 million individual retirement accounts (IRAs). Of these plans and IRAs, the Department assumes that 6.5 percent are new plans/IRAs or plans/IRAs entering into relationships with new financial institutions and, as stated previously, eight percent of these new plans and nine percent of these new IRAs will engage in transactions covered under PTE 84–24 with insurance agents or brokers and pension consultants. In the

[11] The Department's estimated 2015 hourly labor rates include wages, other benefits, and overhead, and are calculated as follows: mean wage from the 2013 National Occupational Employment Survey (April 2014, Bureau of Labor Statistics *http://www.bls.gov/news.release/pdf/ocwage.pdf*); wages as a percent of total compensation from the Employer Cost for Employee Compensation (June 2014, Bureau of Labor Statistics *http://www.bls.gov/news.release/ecec.t02.htm*); overhead as a multiple of compensation is assumed to be 25 percent of total compensation for paraprofessionals, 20 percent of compensation for clerical, and 35 percent of compensation for professional; annual inflation assumed to be 2.3 percent annual growth of total labor cost since 2013 (Employment Costs Index data for private industry, September 2014 *http://www.bls.gov/news.release/eci.nr0.htm*).

[12] As described in the regulatory impact analysis for the accompanying rule, the Department estimates that approximately 1,300 insurance agents and pension consultants service the retirement market.

[13] In the Department's experience, investment company Principal Underwriters almost never use PTE 84–24. Therefore, the Department assumes that ten investment company Principal Underwriters will engage in one transaction annually under PTE 84–24.

plan universe, the Department assumes that a legal professional will spend one hour per plan reviewing the disclosures and preparing an authorization form for each of the approximately 3,500 plans entering into new relationships each year. In the IRA universe, the Department assumes that a legal professional working on behalf of each of the 1,300 insurance agents or pension consultants will spend one hour drafting an authorization form for IRA holders to sign. The Department also estimates that it will take two hours of legal time for each of the approximately 1,300 insurance companies and pension consultants, and one hour of legal time for each of the ten investment company Principal Underwriters, to produce the disclosures.[14] This legal work results in a total of approximately 7,000 hours annually at an equivalent cost of $965,000.

Production and Distribution of Required Disclosures

The Department estimates that approximately 54,000 plans and 4.9 million IRAs have relationships with insurance agents or brokers and pension consultants and are likely to engage in transactions covered under this exemption. Of these 54,000 plans and 4.9 million IRAs, approximately 3,500 plans and 319,000 IRAs are new clients to the insurance agents or brokers and pension consultants each year. The Department assumes that ten plans have relationships with investment company Principal Underwriters that are new each year.

The Department estimates that 3,500 plans will send insurance agents or brokers and pension consultants a two page authorization letter and 319,000 IRAs will receive a two page authorization letter from insurance agents or brokers and pension consultants each year. Prior to obtaining authorization, insurance companies and pension consultants will send the same 3,500 plans and 319,000 IRAs a seven page pre-authorization disclosure. Paper copies of the authorization letter and the pre-authorization disclosure will be mailed for 62 percent of the plans and distributed electronically for the remaining 38 percent. Paper copies of the authorization letter and the pre-authorization disclosure will be mailed to 50 percent of the IRAs and distributed electronically to the remaining 50 percent. The Department estimates that electronic distribution will result in a de minimis cost, while paper distribution will cost approximately $231,000. Paper distribution of the letter and disclosure will also require two minutes of clerical preparation time resulting in a total of 11,000 hours at an equivalent cost of approximately $328,000.

The Department estimates that ten plans will receive the seven page pre-transaction disclosure from investment company Principal Underwriters; 38 percent will be distributed electronically and 62 percent will be mailed. The Department estimates that electronic distribution will result in a de minimis cost, while the paper distribution will cost $5. Paper distribution will also require two minutes of clerical preparation time resulting in a total of 12 minutes at an equivalent cost of $6. Approval to investment company Principal Underwriters will be granted orally at de minimis cost.

Recordkeeping Requirement

Section V of PTE 84–24, as amended, would require insurance agents and brokers, insurance companies, pension consultants, and investment company Principal Underwriters to maintain or cause to be maintained for six years and disclosed upon request the records necessary for the Department, Internal Revenue Service, plan fiduciary, contributing employer or employee organization whose members are covered by the plan, plan participant, beneficiary or IRA owner, to determine whether the conditions of this exemption have been met.

The Department assumes that each institution will maintain these records on behalf of their client plans in their normal course of business. Therefore, the Department has estimated that the additional time needed to maintain records consistent with the exemption will only require about one-half hour, on average, annually for a financial manager to organize and collate the documents or else draft a notice explaining that the information is exempt from disclosure, and an additional 15 minutes of clerical time to make the documents available for inspection during normal business hours or prepare the paper notice explaining that the information is exempt from disclosure. Thus, the Department estimates that a total of 45 minutes of professional time per financial institution per year would be required for a total hour burden of 1,000 hours at an equivalent cost of $92,000.

In connection with the recordkeeping and disclosure requirements discussed above, Section V(b) (2) and (3) of PTE 84–24 provides that parties relying on the exemption do not have to disclose trade secrets or other confidential information to members of the public (*i.e.,* plan fiduciaries, contributing employers or employee organizations whose members are covered by the plan, participants and beneficiaries and IRA owners), but that in the event a party refuses to disclose information on this basis, it must provide a written notice to the requester advising of the reasons for the refusal and advising that the Department may request such information. The Department's experience indicates that this provision is not commonly invoked, and therefore, the written notice is rarely, if ever, generated. Therefore, the Department believes the cost burden associated with this clause is de minimis. No other cost burden exists with respect to recordkeeping.

Overall Summary

Overall, the Department estimates that in order to meet the conditions of this amended class exemption, almost 5,000 financial institutions and plans will produce 645,000 disclosures and notices annually. These disclosures and notices will result in over 19,000 burden hours annually, at an equivalent cost of $1.4 million. This exemption will also result in a total annual cost burden of over $231,000.

These paperwork burden estimates are summarized as follows:

Type of Review: New collection (Request for new OMB Control Number).

Agency: Employee Benefits Security Administration, Department of Labor.

Titles: (1) Proposed Amendment to and Partial Revocation of Prohibited Transaction Exemption (PTE) 84–24 for Certain Transactions Involving Insurance Agents and Brokers, Pension Consultants, Insurance Companies and Investment Company Principal Underwriters.

OMB Control Number: 1210–NEW.

Affected Public: Business or other for-profit.

Estimated Number of Respondents: 4,828.

Estimated Number of Annual Responses: 644,669.

Frequency of Response: Initially, Annually, When engaging in exempted transaction.

Estimated Total Annual Burden Hours: 19,184 hours.

[14] The Department assumes that it will require one hour of legal time per financial institution to prepare plan-oriented disclosures and one hour of legal time per financial institution to prepare IRA-oriented disclosures. Because insurance agents and pension consultants are permitted to use PTE 84–24 in their transactions with both plans and IRAs, this totals two hours of legal burden each. Because investment company principal underwriters are only permitted to use PTE 84–24 in their transactions with plans, this totals one hour of legal burden each.

Estimated Total Annual Burden Cost: $231,074.

General Information

The attention of interested persons is directed to the following:

(1) The fact that a transaction is the subject of an exemption under ERISA section 408(a) and Code section 4975(c)(2) does not relieve a fiduciary or other party in interest or disqualified person with respect to a plan from certain other provisions of ERISA and the Code, including any prohibited transaction provisions to which the exemption does not apply and the general fiduciary responsibility provisions of ERISA section 404 which require, among other things, that a fiduciary discharge his or her duties respecting a plan solely in the interests of the participants and beneficiaries of the plan. Additionally, the fact that a transaction is the subject of an exemption does not affect the requirement of Code section 401(a) that the plan must operate for the exclusive benefit of the employees of the employer maintaining the plan and their beneficiaries;

(2) Before an exemption may be granted under ERISA section 408(a) and Code section 4975(c)(2), the Department must find that the exemption is administratively feasible, in the interests of plans and their participants and beneficiaries and IRA owners, and protective of the rights of plan participants and beneficiaries and IRA owners;

(3) If granted, an exemption is applicable to a particular transaction only if the transaction satisfies the conditions specified in the exemption; and

(4) This amended exemption, if granted, will be supplemental to, and not in derogation of, any other provisions of ERISA and the Code, including statutory or administrative exemptions and transitional rules. Furthermore, the fact that a transaction is subject to an administrative or statutory exemption is not dispositive of whether the transaction is in fact a prohibited transaction.

Written Comments

The Department invites all interested persons to submit written comments on the proposed amendment and proposed partial revocation to the address and within the time period set forth above. All comments received will be made a part of the public record for this proceeding and will be available for examination on the Department's Internet Web site. Comments should state the reasons for the writer's interest in the proposal. Comments received will be available for public inspection at the above address.

Proposed Amendment to PTE 84–24

Under section 408(a) of the Employee Retirement Income Security Act of 1974, as amended (ERISA) and section 4975(c)(2) of the Internal Revenue Code of 1986, as amended (the Code), and in accordance with the procedures set forth in 29 CFR part 2570, subpart B (76 FR 66637, 66644 (October 27, 2011)), the Department proposes to amend and restate PTE 84–24 as set forth below:

Section I. Covered Transactions

(a) *Exemptions.* The restrictions of ERISA section 406(a)(1)(A) through (D) and 406(b) and the taxes imposed by Code section 4975(a) and (b) by reason of Code section 4975(c)(1)(A) through (F), do not apply to any of the following transactions if the conditions set forth in Sections II, III, IV and V, as applicable, are met:

(1) The receipt, directly or indirectly, by an insurance agent or broker or a pension consultant of an Insurance Commission from an insurance company in connection with the purchase, with plan assets, of an insurance or annuity contract.

(2) The receipt of a Mutual Fund Commission by a Principal Underwriter for an investment company registered under the Investment Company Act of 1940 (an investment company) in connection with the purchase, with plan assets, of securities issued by an investment company.

(3) The effecting by an insurance agent or broker, pension consultant or investment company principal underwriter of a transaction for the purchase, with plan assets, of an insurance or annuity contract or securities issued by an investment company.

(4) The purchase, with plan assets, of an insurance or annuity contract from an insurance company.

(5) The purchase, with plan assets, of an insurance or annuity contract from an insurance company which is a fiduciary or a service provider (or both) with respect to the plan solely by reason of the sponsorship of a Master or Prototype Plan.

(6) The purchase, with plan assets, of securities issued by an investment company from, or the sale of such securities to, an investment company or an investment company Principal Underwriter, when the investment company, Principal Underwriter, or the investment company investment adviser is a fiduciary or a service provider (or both) with respect to the plan solely by reason of: (A) The sponsorship of a Master or Prototype Plan; or (B) the provision of Nondiscretionary Trust Services to the plan; or (C) both (A) and (B).

(b) *Scope of these Exemptions.* The exemptions set forth in Section I(a) do not apply to the purchase by an Individual Retirement Account as defined in Section VI, of (1) a variable annuity contract or other annuity contract that is a security under federal securities laws, or (2) mutual fund shares.

Section II. Impartial Conduct Standards

If the insurance agent or broker, pension consultant, insurance company or investment company Principal Underwriter is a fiduciary within the meaning of ERISA section 3(21)(A)(ii) or Code section 4975(e)(3)(B) with respect to the assets involved in the transaction, the following conditions must be satisfied with respect to the transaction to the extent they are applicable to the fiduciary's actions:

(a) When exercising fiduciary authority described in ERISA section 3(21)(A)(ii) or Code section 4975(e)(3)(B) with respect to the assets involved in the transaction, the insurance agent or broker, pension consultant, insurance company or investment company Principal Underwriter acts in the Best Interest of the plan or IRA; and

(b) The statements by the insurance agent or broker, pension consultant, insurance company or investment company Principal Underwriter about recommended investments, fees, Material Conflicts of Interest, and any other matters relevant to a plan's or IRA owner's investment decisions, are not misleading. For this purpose, the insurance agent's or broker's, pension consultant's, insurance company's or investment company Principal Underwriter's failure to disclose a Material Conflict of Interest relevant to the services it is providing or other actions it is taking in relation to a plan's or IRA owner's investment decisions is deemed to be a misleading statement.

Section III. General Conditions

(a) The transaction is effected by the insurance agent or broker, pension consultant, insurance company or investment company Principal Underwriter in the ordinary course of its business as such a person.

(b) The transaction is on terms at least as favorable to the plan or IRA as an arm's length transaction with an unrelated party would be.

(c) The combined total of all fees, Insurance Commissions, Mutual Fund Commissions and other consideration received by the insurance agent or broker, pension consultant, insurance company, or investment company Principal Underwriter:

(1) For the provision of services to the plan or IRA; and

(2) In connection with the purchase of insurance or annuity contracts or securities issued by an investment company is not in excess of ''reasonable compensation'' within the contemplation of ERISA section 408(b)(2) and 408(c)(2) and Code section 4975(d)(2) and 4975(d)(10). If the total is in excess of ''reasonable compensation,'' the ''amount involved'' for purposes of the civil penalties of ERISA section 502(i) and the excise taxes imposed by Code section 4975 (a) and (b) is the amount of compensation in excess of ''reasonable compensation.''

Section IV. Conditions for Transactions Described in Section I(a)(1) Through (4)

The following conditions apply solely to a transaction described in paragraphs (a)(1), (2), (3) or (4) of Section I:

(a) The insurance agent or broker, pension consultant, insurance company, or investment company Principal Underwriter is not (1) a trustee of the plan or IRA (other than a Nondiscretionary Trustee who does not render investment advice with respect to any assets of the plan), (2) a plan administrator (within the meaning of ERISA section 3(16)(A) and Code section 414(g)), (3) a fiduciary who is expressly authorized in writing to manage, acquire or dispose of the assets of the plan or IRA on a discretionary basis, or (4) an employer any of whose employees are covered by the plan. Notwithstanding the above, an insurance agent or broker, pension consultant, insurance company, or investment company Principal Underwriter that is Affiliated with a trustee or an investment manager (within the meaning of Section VI(e)) with respect to a plan or IRA may engage in a transaction described in Section I(a)(1)–(4) of this exemption (if permitted under Section I(b)) on behalf of the plan or IRA if the trustee or investment manager has no discretionary authority or control over the assets of the plan or IRA involved in the transaction other than as a Nondiscretionary Trustee.

(b)(1) With respect to a transaction involving the purchase with plan or IRA assets of an insurance or annuity contract or the receipt of an Insurance Commission thereon, the insurance agent or broker or pension consultant provides to an independent fiduciary with respect to the plan or IRA prior to the execution of the transaction the following information in writing and in a form calculated to be understood by a plan fiduciary who has no special expertise in insurance or investment matters:

(A) If the agent, broker, or consultant is an Affiliate of the insurance company whose contract is being recommended, or if the ability of the agent, broker or consultant to recommend insurance or annuity contracts is limited by any agreement with the insurance company, the nature of the affiliation, limitation, or relationship;

(B) The Insurance Commission, expressed as a percentage of gross annual premium payments for the first year and for each of the succeeding renewal years, that will be paid by the insurance company to the agent, broker or consultant in connection with the purchase of the recommended contract; and

(C) A description of any charges, fees, discounts, penalties or adjustments which may be imposed under the recommended contract in connection with the purchase, holding, exchange, termination or sale of the contract.

(2) Following the receipt of the information required to be disclosed in paragraph (b)(1), and prior to the execution of the transaction, the independent fiduciary acknowledges in writing receipt of the information and approves the transaction on behalf of the plan. The fiduciary may be an employer of employees covered by the plan, but may not be an insurance agent or broker, pension consultant or insurance company involved in the transaction. The fiduciary may not receive, directly or indirectly (*e.g.,* through an Affiliate), any compensation or other consideration for his or her own personal account from any party dealing with the plan in connection with the transaction.

(c)(1) With respect to a transaction involving the purchase with plan assets of securities issued by an investment company or the receipt of a Mutual Fund Commission thereon by an investment company Principal Underwriter, the investment company Principal Underwriter provides to an independent fiduciary with respect to the plan, prior to the execution of the transaction, the following information in writing and in a form calculated to be understood by a plan fiduciary who has no special expertise in insurance or investment matters:

(A) If the person recommending securities issued by an investment company is the Principal Underwriter of the investment company whose securities are being recommended, the nature of the relationship and of any limitation it places upon the Principal Underwriter's ability to recommend investment company securities;

(B) The Mutual Fund commission, expressed as a percentage of the dollar amount of the plan's gross payment and of the amount actually invested, that will be received by the Principal Underwriter in connection with the purchase of the recommended securities issued by the investment company; and

(C) A description of any charges, fees, discounts, penalties, or adjustments which may be imposed under the recommended securities in connection with the purchase, holding, exchange, termination or sale of the securities.

(2) Following the receipt of the information required to be disclosed in paragraph (c)(1), and prior to the execution of the transaction, the independent fiduciary approves the transaction on behalf of the plan. Unless facts or circumstances would indicate the contrary, the approval may be presumed if the fiduciary permits the transaction to proceed after receipt of the written disclosure. The fiduciary may be an employer of employees covered by the plan, but may not be a Principal Underwriter involved in the transaction. The fiduciary may not receive, directly or indirectly *(e.g.,* through an Affiliate), any compensation or other consideration for his or her own personal account from any party dealing with the plan in connection with the transaction.

(d) With respect to additional purchases of insurance or annuity contracts or securities issued by an investment company, the written disclosure required under paragraphs (b) and (c) of this Section IV need not be repeated, unless:

(1) More than three years have passed since the disclosure was made with respect to the same kind of contract or security, or

(2) The contract or security being recommended for purchase or the Insurance Commission or Mutual Fund Commission with respect thereto is materially different from that for which the approval described in paragraphs (b) and (c) of this Section was obtained.

Section V. Recordkeeping Requirements

(a) The insurance agent or broker, pension consultant, insurance company or investment company Principal Underwriter engaging in the covered transactions maintains or causes to be maintained for a period of six years, in a manner that is accessible for audit and

examination, the records necessary to enable the persons described in Section V(b) to determine whether the conditions of this exemption have been met, except that:

(1) If the records necessary to enable the persons described in Section V(b) below to determine whether the conditions of the exemption have been met are lost or destroyed, due to circumstances beyond the control of the insurance agent or broker, pension consultant, insurance company or investment company Principal Underwriter, then no prohibited transaction will be considered to have occurred solely on the basis of the unavailability of those records; and

(2) No party in interest, other than the insurance agent or broker, pension consultant, insurance company or investment company Principal Underwriter shall be subject to the civil penalty that may be assessed under ERISA section 502(i) or the taxes imposed by Code section 4975(a) and (b) if the records are not maintained or are not available for examination as required by paragraph (b) below; and

(b)(1) Except as provided below in subparagraph (2) and notwithstanding any provisions of ERISA section 504(a)(2) and (b), the records referred to in the above paragraph are unconditionally available at their customary location for examination during normal business hours by—

(A) Any duly authorized employee or representative of the Department or the Internal Revenue Service;

(B) Any fiduciary of the plan or any duly authorized employee or representative of the fiduciary;

(C) Any contributing employer and any employee organization whose members are covered by the plan, or any authorized employee or representative of these entities; or

(D) Any participant or beneficiary of the plan or the duly authorized representative of the participant or beneficiary or IRA owner; and

(2) None of the persons described in subparagraph (1)(B)–(D) above shall be authorized to examine trade secrets or commercial or financial information of the insurance agent or broker, pension consultant, insurance company or investment company Principal Underwriter which is privileged or confidential.

(3) Should the insurance agent or broker, pension consultant, insurance company or investment company Principal Underwriter refuse to disclose information on the basis that the information is exempt from disclosure, the insurance agent or broker, pension consultant, insurance company or investment company Principal Underwriter shall, by the close of the thirtieth (30th) day following the request, provide a written notice advising that person of the reasons for the refusal and that the Department may request the information.

Section VI. Definitions

For purposes of this exemption:

(a) The term ''Affiliate'' of a person means:

(1) Any person directly or indirectly controlling, controlled by, or under common control with the person;

(2) Any officer, director, employee (including, in the case of Principal Underwriter, any registered representative thereof, whether or not the person is a common law employee of the Principal Underwriter), or relative of any such person, or any partner in such person; or

(3) Any corporation or partnership of which the person is an officer, director, or employee, or in which the person is a partner.

(b) The insurance agent or broker, pension consultant, insurance company or investment company Principal Underwriter that is a fiduciary acts in the ''Best Interest'' of the plan or IRA is when the fiduciary acts with the care, skill, prudence, and diligence under the circumstances then prevailing that a prudent person would exercise based on the investment objectives, risk tolerance, financial circumstances and needs of the plan or IRA, without regard to the financial or other interests of the fiduciary, any affiliate or other party.

(c) The term ''control'' means the power to exercise a controlling influence over the management or policies of a person other than an individual.

(d) The terms ''Individual Retirement Account'' means any trust, account or annuity described in Code section 4975(e)(1)(B) through (F), including, for example, an individual retirement account described in section 408(a) of the Code and a health savings account described in section 223(d) of the Code.

(e) The terms ''insurance agent or broker,'' ''pension consultant,'' ''insurance company,'' ''investment company,'' and ''Principal Underwriter'' mean such persons and any Affiliates thereof.

(f) The term ''Insurance Commission'' mean a sales commission paid by the insurance company or an Affiliate to the insurance agent or broker or pension consultant for the service of effecting the purchase or sale of an insurance or annuity contract, including renewal fees and trailers, but not revenue sharing payments, administrative fees or marketing payments, or payments from parties other than the insurance company or its Affiliates.

(g) The term ''Master or Prototype Plan'' means a plan which is approved by the Service under Rev. Proc. 2011–49, 2011–44 I.R.B. 608 (10/31/2011), as modified, or its successors.

(h) A ''Material Conflict of Interest'' exists when a person has a financial interest that could affect the exercise of its best judgment as a fiduciary in rendering advice to a plan or IRA.

(i) The term ''Mutual Fund Commission'' means a commission or sales load paid either by the plan or the investment company for the service of effecting or executing the purchase or sale of investment company shares, but does not include a 12b-1 fee, revenue sharing payment, administrative fee or marketing fee.

(j) The term ''Nondiscretionary Trust Services'' means custodial services, services ancillary to custodial services, none of which services are discretionary, duties imposed by any provisions of the Code, and services performed pursuant to directions in accordance with ERISA section 403(a)(1). The term ''Nondiscretionary Trustee'' of a plan or IRA means a trustee whose powers and duties with respect to the plan are limited to the provision of Nondiscretionary Trust Services. For purposes of this exemption, a person who is otherwise a Nondiscretionary Trustee will not fail to be a Nondiscretionary Trustee solely by reason of his having been delegated, by the sponsor of a Master or Prototype Plan, the power to amend the plan.

(k) The term ''Principal Underwriter'' is defined in the same manner as that term is defined in section 2(a)(29) of the Investment Company Act of 1940 (15 U.S. C. 80a-2(a)(29)).

(l) The term ''relative'' means a ''relative'' as that term is defined in ERISA section 3(15) (or a ''member of the family'' as that term is defined in Code section 4975(e)(6)), or a brother, a sister, or a spouse of a brother or a sister.

Signed at Washington, DC, this 14th day of April, 2015.

Phyllis C. Borzi,

Assistant Secretary, Employee Benefits Security Administration, Department of Labor.

[FR Doc. 2015–08837 Filed 4–15–15; 11:15 am]

BILLING CODE 4510–29–P

DEPARTMENT OF LABOR

Employee Benefits Security Administration

29 CFR Part 2550

[Application Number D–11327]

ZRIN 1210–ZA25

Proposed Amendment to and Proposed Partial Revocation of Prohibited Transaction Exemption (PTE) 86–128 for Securities Transactions Involving Employee Benefit Plans and Broker-Dealers; Proposed Amendment to and Proposed Partial Revocation of PTE 75–1, Exemptions From Prohibitions Respecting Certain Classes of Transactions Involving Employee Benefits Plans and Certain Broker-Dealers, Reporting Dealers and Banks

AGENCY: Employee Benefits Security Administration (EBSA), Department of Labor.

ACTION: Notice of proposed amendments to and proposed partial revocation of PTEs 86–128 and 75–1.

SUMMARY: This document contains a notice of pendency before the Department of Labor of proposed amendments to Prohibited Transaction Exemptions (PTEs) 86–128 and 75–1, exemptions from certain prohibited transaction provisions of the Employee Retirement Income Security Act of 1974 (ERISA) and the Internal Revenue Code of 1986 (the Code). The ERISA and Code provisions at issue generally prohibit fiduciaries with respect to employee benefit plans and individual retirement accounts (IRAs) from engaging in self-dealing in connection with transactions involving plans and IRAs. The exemptions allow fiduciaries to receive compensation in connection with certain securities transactions entered into by plans and IRAs. The proposed amendments would increase the safeguards of the exemptions. This document also contains a notice of pendency before the Department of the proposed revocation of PTE 86–128 with respect to transactions involving investment advice fiduciaries and IRAs, and of PTE 75–1, Part II(2), and PTE 75–1, Parts I(b) and I(c), as duplicative in light of existing or newly proposed relief. The amendments and revocations would affect participants and beneficiaries of plans, IRA owners and certain fiduciaries of plans and IRAs.

DATES:

Comments: Written comments must be received by the Department on or before July 6, 2015.

Applicability: The Department proposes to make this amendment and partial revocation applicable eight months after the publication of the final amendment and partial revocation in the **Federal Register**.

ADDRESSES: All written comments concerning the proposed amendments to the class exemptions should be sent to the Office of Exemption Determinations by any of the following methods, identified by ZRIN: 1210–ZA25.

Federal eRulemaking Portal: http://www.regulations.gov at Docket ID number: EBSA–2014–0016. Follow the instructions for submitting comments.

Email to: e-OED@dol.gov.

Fax to: (202) 693–8474.

Mail: Office of Exemption Determinations, Employee Benefits Security Administration, (Attention: D–11327), U.S. Department of Labor, 200 Constitution Avenue NW., Suite 400, Washington, DC 20210.

Hand Delivery/Courier: Office of Exemption Determinations, Employee Benefits Security Administration, (Attention: D–11327), U.S. Department of Labor, 122 C St. NW., Suite 400, Washington, DC 20001.

Instructions. All comments must be received by the end of the comment period. The comments received will be available for public inspection in the Public Disclosure Room of the Employee Benefits Security Administration, U.S. Department of Labor, Room N–1513, 200 Constitution Avenue NW., Washington, DC 20210. Comments will also be available online at *www.regulations.gov,* at Docket ID number: EBSA–2014–0016 and *www.dol.gov/ebsa,* at no charge.

Warning: All comments will be made available to the public. Do not include any personally identifiable information (such as Social Security number, name, address, or other contact information) or confidential business information that you do not want publicly disclosed. All comments may be posted on the Internet and can be retrieved by most Internet search engines.

FOR FURTHER INFORMATION CONTACT: Brian Shiker, Office of Exemption Determinations, Employee Benefits Security Administration, U.S. Department of Labor, 200 Constitution Avenue NW., Suite 400, Washington, DC 20210, (202) 693–8824 (not a toll-free number).

SUPPLEMENTARY INFORMATION: The Department is proposing the amendments to and partial revocation of PTEs 86–128 and 75–1 on its own motion, pursuant to ERISA section 408(a) and Code section 4975(c)(2), and in accordance with the procedures set forth in 29 CFR part 2570, subpart B (76 FR 66637 (October 27, 2011)).

Public Hearing: The Department plans to hold an administrative hearing within 30 days of the close of the comment period. The Department will ensure ample opportunity for public comment by reopening the record following the hearing and publication of the hearing transcript. Specific information regarding the date, location and submission of requests to testify will be published in a notice in the **Federal Register**.

Executive Summary

Purpose of Regulatory Action

These proposed amendments and revocations are being published in the same issue of the **Federal Register** as the Department's proposed regulation that would amend the definition of a ''fiduciary'' of an employee benefit plan or an IRA under ERISA and the Internal Revenue Code (Proposed Regulation). The Proposed Regulation specifies when an entity is a fiduciary by reason of the provision of investment advice for a fee or other compensation regarding assets of a plan or IRA. If adopted, the Proposed Regulation would replace an existing regulation that was adopted in 1975. The Proposed Regulation is intended to take into account the advent of 401(k) plans and IRAs, the dramatic increase in rollovers, and other developments that have transformed the retirement plan landscape and the associated investment market over the four decades since the existing regulation was issued. In light of the extensive changes in retirement investment practices and relationships, the Proposed Regulation would update existing rules to distinguish more appropriately between the sorts of advice relationships that should be treated as fiduciary in nature and those that should not.

PTEs 86–128 and 75–1, Part II(2), permit fiduciaries to receive fees in connection with certain securities transactions entered into by plans and IRAs in accordance with the fiduciaries' advice. In the absence of an exemption, ERISA and the Code generally prohibit fiduciaries from using their authority to affect or increase their own compensation. These proposed amendments would affect the scope of the exemptions and conditions under which fiduciaries may receive such compensation.

The Secretary of Labor may grant and amend administrative exemptions from the prohibited transaction provisions of

ERISA and the Code.[1] Before granting an amendment to an exemption, the Department must find that the amended exemption is administratively feasible, in the interests of plans, their participants and beneficiaries and IRA owners, and protective of the rights of participants and beneficiaries of such plans and IRA owners. Interested parties are permitted to submit comments to the Department through July 6, 2015. The Department plans to hold an administrative hearing within 30 days of the close of the comment period.

Summary of the Major Provisions

PTE 86–128 currently provides an exemption for certain fiduciaries and their affiliates to receive a fee from a plan or IRA for effecting or executing securities transactions as an agent on behalf of the plan or IRA. It also allows a fiduciary to act in an ''agency cross transaction''—as an agent both for the plan or IRA and for another party—and receive reasonable compensation from the other party. The exemption generally requires compliance with certain conditions such as advance disclosures to and approval by an independent fiduciary, although such conditions are not currently applicable to transactions involving IRAs.

This proposed amendment to PTE 86–128 would increase the safeguards of the exemption in a number of ways. The amendment would require fiduciaries relying on the exemption to adhere to certain ''Impartial Conduct Standards,'' including acting in the best interest of the plans and IRAs when providing advice, and would define the types of payments that are permitted under the exemption. The amendment would restrict relief under this exemption to IRA fiduciaries that have discretionary authority or control over the management of the IRA's assets (*i.e.,* investment managers) and would take the additional step of imposing the exemption's conditions on investment management fiduciaries when they engage in transactions with IRAs. The proposal would revoke relief for fiduciaries who provide investment advice to IRAs. A new exemption for receipt of compensation by fiduciaries who provide investment advice to IRAs, plan participants, and certain small plans is proposed elsewhere in this issue of the **Federal Register** in the ''Best Interest Contract Exemption.'' In the Department's view, the provisions of the Best Interest Contract Exemption better protect the interests of IRAs with respect to investment advice regarding securities transactions.

This proposed amendment also would add a new transaction to the exemption for certain fiduciaries to act as principals (as opposed to agents for third parties) in selling mutual fund shares to plans and IRAs and to receive commissions for doing so. An exemption for this transaction is currently available in PTE 75–1, Part II(2), with few applicable safeguards.

Several changes are proposed with respect to PTE 75–1. The Department is proposing to revoke PTE 75–1, Part II(2), as that exemption would be incorporated within PTE 86–128 subject to additional safeguards. Part I(b) and (c) of PTE 75–1 also would be revoked. These provisions of PTE 75–1 provide relief for certain non-fiduciary services to plans and IRAs. If these provisions are revoked, persons seeking to engage in such transactions should look to the existing statutory exemptions provided in ERISA section 408(b)(2) and Code section 4975(d)(2), and the Department's implementing regulations at 29 CFR 2550.408b-2, for relief.

Finally, this document proposes to amend the remaining exemption of PTE 75–1, Part II, to revise the recordkeeping requirement of that exemption.

Executive Order 12866 and 13563 Statement

Under Executive Orders 12866 and 13563, the Department must determine whether a regulatory action is ''significant'' and therefore subject to the requirements of the Executive Order and subject to review by the Office of Management and Budget (OMB). Executive Orders 12866 and 13563 direct agencies to assess all costs and benefits of available regulatory alternatives and, if regulation is necessary, to select regulatory approaches that maximize net benefits (including potential economic, environmental, public health and safety effects, distributive impacts, and equity). Executive Order 13563 emphasizes the importance of quantifying both costs and benefits, of reducing costs, of harmonizing and streamlining rules, and of promoting flexibility. It also requires federal agencies to develop a plan under which the agencies will periodically review their existing significant regulations to make the agencies' regulatory programs more effective or less burdensome in achieving their regulatory objectives.

Under Executive Order 12866, ''significant'' regulatory actions are subject to the requirements of the Executive Order and review by the Office of Management and Budget (OMB). Section 3(f) of Executive Order 12866, defines a ''significant regulatory action'' as an action that is likely to result in a rule (1) having an annual effect on the economy of $100 million or more, or adversely and materially affecting a sector of the economy, productivity, competition, jobs, the environment, public health or safety, or State, local or tribal governments or communities (also referred to as ''economically significant'' regulatory actions); (2) creating serious inconsistency or otherwise interfering with an action taken or planned by another agency; (3) materially altering the budgetary impacts of entitlement grants, user fees, or loan programs or the rights and obligations of recipients thereof; or (4) raising novel legal or policy issues arising out of legal mandates, the President's priorities, or the principles set forth in the Executive Order. Pursuant to the terms of the Executive Order, OMB has determined that this action is ''significant'' within the meaning of Section 3(f)(4) of the Executive Order. Accordingly, the Department has undertaken an assessment of the costs and benefits of the proposed amendment, and OMB has reviewed this regulatory action.

Background

As explained more fully in the preamble to the Department's proposed regulation on the definition of fiduciary under ERISA section 3(21)(A)(ii) and Code section 4975(e)(3)(B), also published in this issue of the **Federal Register**, ERISA is a comprehensive statute designed to protect the interests of plan participants and beneficiaries, the integrity of employee benefit plans, and the security of retirement, health, and other critical benefits. The broad public interest in ERISA-covered plans is reflected in its imposition of stringent fiduciary responsibilities on parties engaging in important plan activities, as well as in the tax-favored status of plan assets and investments. One of the chief ways in which ERISA protects employee benefit plans is by requiring that plan fiduciaries comply with fundamental obligations rooted in the law of trusts. In particular, plan fiduciaries must manage plan assets prudently and with undivided loyalty to the plans and their participants and beneficiaries.[2] In

[1] Regulations at 29 CFR 2570.30 to 2570.52 describe the procedures for applying for an administrative exemption under ERISA. Code section 4975(c)(2) authorizes the Secretary of the Treasury to grant exemptions from the parallel prohibited transaction provisions of the Code. Reorganization Plan No. 4 of 1978 (5 U.S.C. app. at 214 (2000)) generally transferred the authority of the Secretary of the Treasury to issue administrative exemptions under Code section 4975 to the Secretary of Labor.

[2] ERISA section 404(a).

addition, they must refrain from engaging in ''prohibited transactions,'' which ERISA forbids because of the dangers posed by the fiduciaries' conflicts of interest with respect to the transactions.[3] When fiduciaries violate ERISA's fiduciary duties or the prohibited transaction rules, they may be held personally liable for the breach.[4] In addition, violations of the prohibited transaction rules are subject to excise taxes under the Code.

The Code also has rules regarding fiduciary conduct with respect to tax-favored accounts that are not generally covered by ERISA, such as IRAs. Although ERISA's general fiduciary obligations of prudence and loyalty do not govern the fiduciaries of IRAs, these fiduciaries are subject to the prohibited transaction rules. In this context fiduciaries engaging in the illegal transactions are subject to an excise tax enforced by the Internal Revenue Service. Unlike participants in plans covered by Title I of ERISA, under the Code, IRA owners cannot bring suit against fiduciaries under ERISA for violation of the prohibited transaction rules and fiduciaries are not personally liable to IRA owners for the losses caused by their misconduct. Elsewhere in this issue of the **Federal Register**, however, the Department is proposing two new class exemptions that would create contractual obligations for the adviser to adhere to certain standards (the Impartial Conduct Standards). IRA owners would have a right to enforce these new contractual rights.

Under this statutory framework, the determination of who is a ''fiduciary'' is of central importance. Many of ERISA's protections, duties, and liabilities hinge on fiduciary status. In relevant part, section 3(21)(A) of ERISA and section 4975(e)(3) of the Code provide that a person is a fiduciary with respect to a plan or IRA to the extent he or she (1) exercises any discretionary authority or discretionary control with respect to management of such plan or IRA, or exercises any authority or control with respect to management or disposition of its assets; (2) renders investment advice for a fee or other compensation, direct or indirect, with respect to any moneys or other property of such plan or IRA, or has any authority or responsibility to do so; or, (3) has any discretionary authority or discretionary responsibility in the administration of such plan or IRA.

ERISA section 406(b)(1) and Code section 4975(c)(1)(E) prohibit a fiduciary from dealing with the income or assets of a plan or IRA in his or her own interest or his or her own account. Parallel regulations issued by the Departments of Labor and the Treasury explain that these provisions impose on fiduciaries of plans and IRAs a duty not to act on conflicts of interest that may affect the fiduciary's best judgment on behalf of the plan or IRA. Accordingly, a fiduciary may not cause a plan or IRA to pay an additional fee to such fiduciary, or to a person in which such fiduciary has an interest that may affect the exercise of the fiduciary's best judgment as a fiduciary.

The Department understands that investment professionals are often compensated on a commission basis for effecting or executing securities transactions for plans, plan participants, and IRA owners. Because such payments vary based on the advice provided, the Department views a fiduciary that recommends to a plan or IRA a securities transaction and then receives a commission for itself or a related party as violating the prohibited transaction provisions of ERISA section 406(b) and Code section 4975(c)(1)(E).

PTE 86–128[5] provides an exemption from these prohibited transactions provisions for certain types of fiduciaries to use their authority to cause a plan or IRA to pay a fee to the fiduciary, or its affiliate, for effecting or executing securities transactions as agent for the plan. The exemption further provides relief for these types of fiduciaries to act as agent in an ''agency cross transaction'' for both a plan or IRA and one or more other parties to the transaction, and for such fiduciaries or their affiliates to receive fees from the other party(ies) in connection with the agency cross transaction. An agency cross transaction is defined in the exemption as a securities transaction in which the same person acts as agent for both any seller and any buyer for the purchase or sale of a security.

As originally granted, the exemption in PTE 86–128 could be used only by fiduciaries who were not discretionary trustees, plan administrators, or employers of any employees covered by the plan.[6] PTE 86–128 was amended in 2002 to permit use of the exemption by discretionary trustees, and their affiliates, without meeting the ''recapture of profits'' provisions, subject to certain additional requirements.[7] Additionally, in 2011 the Department clarified that PTE 86–128 provides relief for covered transactions engaged in by fiduciaries who provide investment advice.[8]

If granted, this proposed amendment would make additional changes, discussed below, to PTE 86–128, as well as a re-ordering of the sections of the exemption.[9] The Department notes that the relief provided under PTE 86–128 is limited to ERISA section 406(b) and Code section 4975(c)(1)(E) and (F), for self-dealing and other conflict of interest transactions involving fiduciaries. Relief from the prohibitions of ERISA section 406(a)(1)(C) or Code section 4975(c)(1)(C), for the provision of services to a plan, would be available only by meeting the requirements of the statutory exemptions of ERISA section 408(b)(2) and Code section 4975(d)(2) and the Department's regulations in 29 CFR 2550.408b–2.[10]

Description of the Proposed Amendments

I. Impartial Conduct Standards

This proposal would amend PTE 86–128 to require fiduciaries engaging in the exempted transactions to adhere to certain Impartial Conduct Standards. The Impartial Conduct Standards are set forth in a new proposed Section II. The standards would only be applicable to the extent they are applicable to the fiduciary's actions.

Under the first conduct standard, fiduciaries would be required to act in the plan's or IRA's best interest when providing investment advice to the plan or IRA, or managing the plan's or IRA's assets. Best interest is defined as acting with the care, skill, prudence, and diligence under the circumstances then prevailing that a prudent person would exercise based on the investment objectives, risk tolerance, financial

[3] ERISA section 406. ERISA also prohibits certain transactions between a plan and a ''party in interest.''

[4] ERISA section 409; *see also* ERISA section 405.

[5] PTE 86–128, 51 FR 41686 (November 18, 1986), replaced PTE 79–1, 44 FR 5963 (January 30, 1979) and PTE 84–46, 49 FR 22157 (May 25, 1984).

[6] Plan trustees, plan administrators and employers were permitted to rely on the exemption if they returned or credited to the plan all profits (recapture of profits) earned in connection with the transactions covered by the exemption.

[7] 67 FR 64137 (October 17, 2002).

[8] *See* Advisory Opinion 2011–08A (June 21, 2011).

[9] This proposal would move the definitions from Section I to Section VII. The other sections are re-ordered accordingly. Additionally, within the definitions section, the following definitions are new or revised: Independent (Section VII(f)), plan (Section VII(j)), individual retirement account (Section VII(k)), Related Entity (Section VII(l)), Best Interest (Section VII(m)), and Commission (VII(n)).

[10] These statutory exemptions provide relief for making reasonable arrangements between a plan and a party in interest (disqualified person) for, among other things, services necessary for operation of the plan, if no more than reasonable compensation is paid therefore. ERISA section 408(b)(2) and Code section 4975(d)(2) do not provide relief from ERISA section 406(b) or Code section 4975(c)(1)(E) and (F).

circumstances, and the needs of the plan or IRA. Further, under the best interest standard, fiduciaries must act without regard to their own financial or other interests or those of any affiliates or other party. Under this standard, fiduciaries must put the plan's or IRA's interests ahead of the fiduciaries' own financial interests or those of any other party.

In this regard, the Department notes that while fiduciaries of plans covered by ERISA are subject to the ERISA section 404 standards of prudence and loyalty, the Code contains no provisions that hold IRA fiduciaries to those standards. However, as a condition of relief under the proposed exemption, both IRA and plan fiduciaries would have to agree to, and uphold, the best interest requirement that is set forth in Section II(a). The best interest standard is defined to effectively mirror the ERISA section 404 duties of prudence and loyalty, as applied in the context of fiduciary investment advice. Failure to satisfy the best interest standard would render the exemption unavailable to the fiduciary with respect to compensation received in connection with the transaction.

The second conduct standard requires that all compensation received by the fiduciary and its affiliates in connection with the applicable transaction be reasonable in relation to the total services provided to the plan or IRA. The third conduct standard requires that statements about recommended investments, fees, material conflicts of interest, and any other matters relevant to a plan's or IRA's investment decisions, are not misleading. The Department notes in this regard that a fiduciary's *failure* to disclose a material conflict of interest may be considered a misleading statement. Transactions that violate the requirements are not likely to be in the interests of or protective of plans, their participants and beneficiaries, and IRA owners.

Unlike the new exemption proposals published elsewhere in the **Federal Register**, these proposed amendments do not require fiduciaries to contractually warrant compliance with applicable federal and state laws. However, the Department notes that significant violations of applicable federal or state law could also amount to violations of the Impartial Conduct Standards, such as the best interest standard, in which case, these exemptions, as amended, would be deemed unavailable for transactions occurring in connection with such violations.

II. IRAs

Currently, Section IV(a) of PTE 86–128 contains an exception from the conditions of the exemption for covered transactions engaged in on behalf of individual retirement accounts described in 29 CFR 2510.3–2(d) (IRAs), and plans, other than training programs, that cover no employees within the meaning of 29 CFR 2510.3–3. The exception was included in response to comments received on the original proposal of PTE 86–128's predecessor, PTE 79–1, suggesting that such plans and IRAs did not need the protection provided by the conditions of the exemption because the participants of such plans and IRAs directly exercise control over their accounts. Additionally, the comments suggested that imposing the conditions on these plans and IRAs would result in unnecessary costs.[11]

Upon reconsideration of the issue, however, the Department has determined that these policy reasons do not support a continued exception from the conditions of PTE 86–128 for IRAs. Since PTE 86–128 was granted, the amount of assets held in IRAs has grown dramatically. The financial services marketplace has become more complex, and compensation structures and the types of products offered have changed significantly beyond what the Department contemplated at the time. The fact that IRA owners generally do not benefit from the protections afforded by the fiduciary duties owed by plan sponsors to their employee benefit plans makes it all the more critical that appropriate safeguards in an exemption apply to IRAs.

The Department therefore is proposing to revise the exemption in several ways with respect to transactions involving IRAs. First, if the amendment is adopted, fiduciaries that exercise discretionary authority or control with respect to IRAs as described in Code section 4975(e)(3)(A) (*i.e.,* investment managers) will be required, among other things, to make the disclosures and receive approvals that are currently required by the exemption with respect to other types of plans. The Department believes that compliance with these conditions will enhance the ability of the authorizing fiduciary, which, in the case of an IRA would be the IRA owner, to monitor fees and compensation paid in connection with their accounts.

Further, if the amendment is adopted, the exemption will no longer provide relief to IRA fiduciaries engaging in the covered transactions if they are fiduciaries due to the provision of investment advice for a fee as described in Code section 4975(e)(3)(B). This change is reflected in a proposed new Section I(c), setting forth the scope of the exemption, which will apply on a prospective basis. Elsewhere in this issue of the **Federal Register**, the Department has proposed a new exemption that specifically provides relief for the receipt by such fiduciaries of a broad range of types of compensation (Best Interest Contract Exemption). The Best Interest Contract Exemption was crafted to protect the interests of retail retirement investors—plan participants and beneficiaries, IRA owners and small plan sponsors—that rely on fiduciary investment advisers to engage in securities transactions, and it contains safeguards specifically crafted for these investors. The exemption requires the investment advice fiduciary to contractually acknowledge fiduciary status, commit to adhere to basic standards of impartial conduct, adopt policies and procedures reasonably designed to minimize the harmful impact of conflicts of interest, and disclose basic information on their conflicts of interest and on the cost of their advice. As a result, the exemption ensures that IRA owners have a contract-based claim to hold their fiduciary investment advisers accountable if they violate basic obligations of prudence and loyalty.

The proposed definition of IRA in Section I(c) is ''any trust, account or annuity described in Code section 4975(e)(1)(B) through (F), including, for example, an individual retirement account described in section 408(a) of the Code and a health savings account described in section 223(d) of the Code.'' The Department notes that this is not identical to the definition currently in Section IV(a), the exception for IRAs, which is ''individual retirement accounts meeting the conditions of 29 CFR 2510.3–2(d), or plans, other than training programs, that cover no employees within the meaning of 29 CFR 2510.3–3.'' However, this new definition is identical to the definition of IRA used in the proposed Best Interest Contract Exemption. Accordingly, the Best Interest Contract Exemption will be available for transactions involving IRAs that are excluded from this exemption.

III. The Mutual Fund Exemption of PTE 75–1, Part II

PTE 75–1, granted October 31, 1975,[12] provides an exemption for broker-

[11] *See* preamble to PTE 79–1, 44 FR 5963, 5964 (Jan. 30, 1979).

[12] 40 FR 50845 (Oct. 31, 1975).

dealers, reporting dealers and banks to engage in certain classes of transactions with employee benefit plans and IRAs. The exemption has five parts, two of which (Part II and Part V) were amended in 2006.[13]

Part II of PTE 75–1 is captioned ''Principal transactions.'' Part II(1) of the exemption permits the purchase or sale of a security between an employee benefit plan or IRA and a broker-dealer registered under the Securities Exchange Act of 1934 (15 U.S.C. 78a *et. seq.*), a reporting dealer who makes primary markets in securities of the United States Government or of any agency of the United States Government and reports daily to the Federal Reserve Bank of New York its positions with respect to Government securities and borrowings thereon, or a bank supervised by the United States or a State. The exemption provided in Part II(1) does not extend to the fiduciary self-dealing and conflicts of interest prohibitions of ERISA and the Code.

PTE 75–1, Part II(2), contains a special exemption for mutual fund purchases (the mutual fund exemption) between fiduciaries and plans or IRAs. Although it does provide relief for fiduciary self-dealing and conflicts of interest, the exemption is only available if the fiduciary who decides on behalf of the plan or IRA to enter into the transaction is not a principal underwriter for, or affiliated with, the mutual fund.

In 2004, when proposing to amend Part II of PTE 75–1,[14] the Department sought public comments on the current utility of the mutual fund exemption. The Department was uncertain if the mutual fund exemption continued to provide meaningful relief to fiduciaries, insofar as many sales of mutual fund shares are made to and from the mutual fund itself. It was the Department's understanding that any broker-dealer involvement in these mutual fund transactions was as agent on behalf of a plan or IRA. Under such circumstances, the transactions would not appear to be properly characterized as ''principal'' transactions.

The Department received three comments on the continuing utility of the mutual fund exemption. The commenters stated that the mutual fund exemption continued to be widely used by the public. As background, the commenters noted that mutual fund transactions had some characteristics of principal transactions as well as agency transactions. In 1975, when the mutual fund exemption was originally granted, mutual funds typically entered into distribution agreements with principal underwriters, and the underwriters in turn entered into selling agreements designated as ''dealer'' agreements, with retail broker-dealers. However, sales of mutual funds under these dealer agreements exhibited many of the economic characteristics of agency transactions. For example, commenters stated that the selling broker-dealer was not at risk because it could not inventory mutual fund shares. Additionally, as mutual funds were required to be sold at net asset value (NAV), the broker-dealer usually received a fixed sales commission for effecting the transaction, rather than a negotiable dealer mark-up.

These commenters indicated that these features were still commonplace in mutual fund transactions. Additionally, the commenters indicated that this exemption was commonly understood to provide relief for the receipt of commissions by such broker-dealer fiduciaries in connection with the transactions.[15] In issuing the final amendment to PTE 75–1, Part II, the Department acknowledged these comments and stated that additional time was needed to fully consider the issues raised in these comments. Pending further action by the Department, the mutual fund exemption has remained in effect.[16]

After further consideration of these comments, the Department concurs that the relief provided by the mutual fund exemption remains relevant to broker-dealer fiduciaries that use their authority to cause plans and IRAs to purchase mutual fund shares. The Department believes that the transaction described in PTE 75–1, Part II(2), is most accurately described as a ''riskless principal'' transaction, in which the fiduciary that is providing investment advice purchases shares on its own account for the purpose of covering a purchase order previously received from a plan or IRA, and then sells the shares to the plan or IRA to satisfy the order.

However, the existing mutual fund exemption needs to be revised in a manner that would make it consistent with more recent exemptions that similarly provide broad relief from fiduciary self-dealing and conflicts of interest. PTE 86–128 covers transactions that are the most similar to those covered in the mutual fund exemption in that the relief it provides permits a fiduciary to use its authority to receive a commission for effecting or executing a plan's or IRA's securities transactions as agent for the plan or IRA, subject to a number of specific requirements designed to protect the interests of plan participants and beneficiaries and IRA owners.

The Department is therefore proposing a new Section I(b) of PTE 86–128 that would provide relief for the transaction currently covered in PTE 75–1, Part II(2). New Section I(b) would permit a broker-dealer fiduciary to use its authority to cause a plan (or IRA, as applicable) to purchase shares of a mutual fund from the broker-dealer fiduciary, acting as principal, where the shares were acquired solely to cover the plan's prior order, and for the receipt of a commission by such fiduciary in connection with the transaction.[17] Consistent with the exemption originally provided for this transaction in PTE 75–1, Part II(2), relief is not available if such fiduciary is a principal underwriter for, or affiliated with, such investment company. The Department intends that, with respect to this new proposed transaction, the compensation to the broker-dealer will be limited to the commission (*i.e.,* sales load) disclosed by the mutual fund, but may be paid either by the plan or the mutual fund.

To provide certainty with respect to the payments permitted by the exemption in both Section I(a) and newly proposed Section I(b), the Department is proposing a new defined term ''Commission.'' This term, used in Section I(b), will also replace the language currently in the exemption that permits a fiduciary to cause a plan or IRA to pay a ''fee for effecting or executing securities transactions.'' The term ''Commission'' is defined to mean a brokerage commission or sales load paid for the service of effecting or executing the transaction, but not a 12b–1 fee, revenue sharing payment,

[13] 71 FR 5883 (Feb. 3, 2006).

[14] 69 FR 23216 (April 28, 2004).

[15] Although PTE 75–1, Part II, is silent on the payment of commissions, the commenters point to the preamble to the proposal of PTE 77–9 (41 FR 56760, December 29, 1976)(final exemption superseded by PTE 84–24, 49 FR 13208, April 3, 1984, as amended, 71 FR 5887, February 3, 2006) which states that PTE 75–1, Part II, covers ''the purchase and sale of mutual fund shares by a plan from or to a broker-dealer which is a plan fiduciary, provided that such broker-dealer is not a principal underwriter for, or affiliated with, such mutual fund, and the receipt of commissions by such fiduciary/broker-dealer in connection with the purchase of mutual fund shares by plans.''

[16] 71 FR 5883, 5885 (Feb. 3, 2006).

[17] Section I(b) would provide relief from the restrictions of ERISA section 406(a)(1)(A) and (D) and 406(b) and the taxes imposed by Code section 4975(a) and (b), by reason of Code section 4975(c)(1)(A), (D), (E) and (F). The proposed new covered transaction, as a principal transaction, involves the purchase and sale of shares between a plan and a party in interest, and the transfer of a plan asset to a party in interest, which would violate the cited provisions of ERISA section 406(a) and Code section 4975(c)(1)(A) and (D) in the absence of an exemption.

marketing fee, administrative fee, sub-TA fee, or sub-accounting fee. Further, based on the language of Section I(a)(1), the term ''Commission'' as used in that section is limited to payments directly from the plan or IRA.[18] On the other hand, the Commission payment described in Section I(b) is not limited to payments directly from the plan or IRA and includes payments from the mutual fund. The Department understands that sales load payments in connection with mutual fund transactions are commonly made by the mutual fund.

The proposed new covered transaction in Section I(b) would be subject to the general prohibition in PTE 86–128 on churning, and the new proposed Impartial Conduct Standards in Section II. In addition, the Department is also proposing a new Section IV to PTE 86–128 which sets forth conditions applicable solely to the proposed new covered transaction. The proposed new Section IV incorporates conditions currently applicable to PTE 75–1, Part II(2).

Specifically, the conditions applicable to the proposed new covered transaction in Section I(b), as set forth in proposed Section IV, are: (1) The fiduciary customarily sells securities for its own account in the ordinary course of its business as a broker-dealer; (2) the transaction is at least as favorable to the plan or IRA as an arm's length transaction with an unrelated party would be; and (3) unless rendered inapplicable by Section V of the exemption, the requirements of Sections III(a) through III(f), III(h) and III(i) (if applicable), and III(j) are satisfied with respect to the transaction. The Department seeks comments as to whether any of the conditions described in Section IV(c) should be revised as applied to the proposed new covered transaction. The exceptions contained in Section V would be applicable to this proposed new covered transaction as well.[19]

Relief is not proposed in the new Section I(b) for sales by a plan or IRA to a fiduciary due to the Department's belief that it is not necessary for a plan or IRA to sell a mutual fund share to a fiduciary that is acting as a principal. The Department requests comment on this limitation, as well as on its understanding of this transaction and the related fee payments.

Additionally, in connection with the proposed new covered transaction, the Department is proposing to revoke the mutual fund exemption provisions from PTE 75–1, Part II(2). The Department is further proposing to revise the recordkeeping provisions of Section (e) of PTE 75–1, Part II. Section (e) currently provides that records demonstrating compliance with the exemption must be maintained by the plan or IRA involved in the transaction. The proposed amendment would place the responsibility for maintaining such records on the broker-dealer, reporting dealer, or bank engaging in the transaction with such plan or IRA.

IV. Relief for Related Entities

Currently, PTE 86–128 provides relief for a fiduciary to use its authority to cause a plan or IRA to pay a fee to *that person* for effecting or executing securities transactions. The term ''person'' is defined to include the person's affiliates, which are: (1) Any person directly or indirectly, through one or more intermediaries, controlling, controlled by, or under common control with, the person; (2) any officer, director, partner, employee, relative (as defined in ERISA section 3(15)), brother, sister, or spouse of a brother or sister, of the person; and (3) any corporation or partnership of which the person is an officer, director or employee or in which such person is a partner.

The Department understands that in some cases, fiduciaries are concerned that the relief provided by the exemption to persons (including their affiliates) is too narrow. In this regard, it is a prohibited transaction for a fiduciary to use the ''authority, control, or responsibility which makes such a person a fiduciary to cause a plan to pay an additional fee to such fiduciary (or to a person in which such fiduciary has an interest which may affect the exercise of such fiduciary's best judgment as a fiduciary) to provide a service.''[20] The concern expressed to the Department is that the definition of affiliate is not broad enough to cover all persons in whom a fiduciary has an interest that may affect its best judgment. Specifically, it is not necessary for a fiduciary to have control over or be under control by an entity in order for the fiduciary to have an interest in the entity that may affect the exercise of the fiduciary's best judgment as a fiduciary.

To address this concern, the amendment would add relief for covered transactions when fees are paid to a ''related entity.''[21] The term ''related entity'' is defined as an entity, other than an affiliate, in which a fiduciary has an interest that may affect the exercise of its best judgment as a fiduciary. Additionally, Section II(b) of the exemption would reflect this additional relief to related entities. Section II(b) would require that all compensation received by the person (*i.e.,* the fiduciary and its affiliates) and any related entity in connection with the transaction is reasonable in relation to the total services the person provides to the plan or IRA.

The Department requests comment on the necessity of incorporating relief for related entities in PTE 86–128, and the approach taken in this proposal to do so.

V. The 2002 Amendment and Clarification of Recapture of Profits Exception of PTE 86–128

As explained above, discretionary trustees were first permitted to rely on PTE 86–128 without meeting the ''recapture of profits'' provision pursuant to an amendment in 2002 (2002 Amendment). To effect this change, the 2002 Amendment revised Section III(a), which had provided that ''[t]he person engaging in the covered transaction [may not be] a trustee (other than a nondiscretionary trustee), or an administrator of the plan, or an employer any of whose employees are covered by the plan.'' Under the amendment, the reference to ''trustee (other than a nondiscretionary trustee)'' was deleted from Section III(a). Further, under the amendment, discretionary trustees had to satisfy certain additional conditions, set forth in Section III(h) and (i), in order to rely on the exemption. Section III(h) provides that discretionary trustees may engage in the covered transactions only with plans or IRAs with total net assets of at least $50 million.[22] Section III(i) requires discretionary trustees to provide additional disclosures.

The Department understands that subsequent to the 2002 Amendment, questions were raised as to whether discretionary trustees were permitted to rely on the ''recapture of profits''

[18] Section I(a)(2) of the proposed amended exemption clarifies that relief for plan fiduciaries acting as agents in agency cross transactions is limited to compensation paid in the form of Commissions, although the Commission may be paid by the other party to the transaction.

[19] The condition set forth in Section V(c)(1)(B) of the exemption requires the disclosure of information that the person seeking authorization ''reasonably believes to be necessary'' for the authorizing fiduciary to determine whether the authorization should be made. This condition is followed by a list of required items. To improve objectivity of the exemption, the Department is proposing to delete the language ''reasonably believes to be necessary'' from Section V(c)(1)(B) but leave the list of specified items in place.

[20] ERISA section 406(b); Code section 4975(c)(1)(E).

[21] See re-ordered Section VII(m).

[22] Special rules apply under Section III(h) for pooled funds and groups of plans maintained by a single employer or controlled group of employers.

provision of the exemption (redesignated in this proposal as Section V(b)) as an alternative to complying with Sections III(h) and (i). This provision allows persons identified in Section III(a) to engage the covered transactions if they return or credit to the plan or IRA all profits. By deleting the reference to discretionary trustees from Section III(a), the Department believes that the 2002 Amendment inadvertently may have prevented trustees of plans or IRAs from using the recapture of profits approach, and instead, has limited the exemption to trustees that satisfy Section III(h) and (i). As this result was not intended, the Department proposes to modify the exemption to permit all trustees, regardless of associated plan or IRA size, to utilize the exception as originally permitted in PTE 86–128 for the recapture of profits.

In order to achieve this result, the Department has proposed amendments to several different conditions of PTE 86–128. Section V(c), which is re-designated as Section V(b) in this proposal, provides that Sections III(a) and III(i) do not apply in any case where the person engaging in the covered transaction returns or credits to the plan or IRA all profits earned by that person in connection with the securities transaction associated with the covered transaction. In addition, the Department proposes to reinsert a reference to trustees (other than nondiscretionary trustees) in Section III(a) along with the existing references to plan administrators and employers. Finally, a sentence has been added to the end of Section III(a) stating: ''Notwithstanding the foregoing, this condition does not apply to a trustee that satisfies Section III(h) and (i).'' The purpose of these proposed amendments is to clarify that trustees may engage in covered transactions subject to the recapture of profits limitations in Section V(b) of the exemption.

VI. Recordkeeping Requirements

A proposed new Section VI to PTE 86–128 would require the fiduciary engaging in a transaction covered by the exemption to maintain records necessary to enable certain persons (described in proposed Section VI(b)) to determine whether the conditions of this exemption have been met. The proposed recordkeeping requirement is consistent with other existing class exemptions as well as the recordkeeping provisions of the other notices of proposed exemption published in this issue of the **Federal Register**.

Description of the Proposed Revocation of PTE 75–1, Part I(b) and (c), and II(2), and Proposed Amendment to and Restatement of PTE 75–1, Part II

Lastly, the Department proposes to revoke Part I(b) and I(c) of PTE 75–1, and Part II(2) of PTE 75–1. Part I(b) of PTE 75–1 provides relief from ERISA section 406 and the taxes imposed by Code section 4975(a) and (b), for the effecting of securities transactions, including clearance, settlement or custodial functions incidental to effecting the transactions, by parties in interest or disqualified persons other than fiduciaries. Part I(c) of PTE 75–1 provides relief from ERISA section 406 and Code section 4975(a) and (b) for the furnishing of advice regarding securities or other property to a plan or IRA by a party in interest or disqualified person under circumstances which do not make the party in interest or disqualified person a fiduciary with respect to the plan or IRA.

PTE 75–1 was granted shortly after ERISA's passage in order to provide certainty to the securities industry over the nature and extent to which ordinary and customary transactions between broker-dealers and plans or IRAs would be subject to the ERISA prohibited transaction rules. Paragraphs (b) and (c) in Part I of PTE 75–1, specifically, served to provide exemptive relief for certain non-fiduciary services provided by broker-dealers in securities transactions. Code section 4975(d)(2), ERISA section 408(b)(2) and regulations thereunder, have clarified the scope of relief for service providers to plans and IRAs.[23] The Department believes that the relief provided in Parts I(b) and I(c) of PTE 75–1 duplicates the relief available under the statutory exemptions. Therefore, the Department is proposing the revocation of these parts.

As noted earlier, the exemption in PTE 75–1, Part II(2), would, under this proposal, be incorporated into PTE 86–128. Accordingly, the Department is proposing herein the revocation of PTE 75–1, Part II(2). In connection with the proposed revocation of PTE 75–1, Part II(2), the Department is proposing to amend Section (e) of the remaining exemption in PTE 75–1, Part II, the recordkeeping provisions of the exemption, to place the recordkeeping responsibility on the broker-dealer, reporting dealer, or bank engaging in transactions with the plan or IRA, as opposed to the plan or IRA itself.

[23] See 29 CFR 2550.408b-2, 42 FR 32390 (June 24, 1977) and Reasonable Contract or Arrangement under Section 408(b)(2)—Fee Disclosure, Final Rule, 77 FR 5632 (Feb. 3, 2012).

Applicability Date

The Department is proposing that compliance with the final regulation defining a fiduciary under ERISA section 3(21)(A)(ii) and Code section 4975(e)(3)(B) will begin eight months after the final regulation is published in the **Federal Register** (Applicability Date). The Department proposes to make the amendments to and partial revocation of this exemption, if granted, applicable on the Applicability Date as well.

Paperwork Reduction Act Statement

As part of its continuing effort to reduce paperwork and respondent burden, the Department of Labor conducts a preclearance consultation program to provide the general public and Federal agencies with an opportunity to comment on proposed and continuing collections of information in accordance with the Paperwork Reduction Act of 1995 (PRA) (44 U.S.C. 3506(c)(2)(A)). This helps to ensure that the public understands the Department's collection instructions, respondents can provide the requested data in the desired format, reporting burden (time and financial resources) is minimized, collection instruments are clearly understood, and the Department can properly assess the impact of collection requirements on respondents.

Currently, the Department is soliciting comments concerning the proposed information collection request (ICR) included in the Proposed Amendment to and Proposed Partial Revocation of Prohibited Transaction Exemption (PTE) 86–128 for Securities Transactions Involving Employee Benefit Plans and Broker-Dealers; Proposed Amendment to and Partial Revocation of PTE 75–1, Exemptions From Prohibitions Respecting Certain Classes of Transactions Involving Employee Benefits Plans and Certain Broker-Dealers, Reporting Dealers and Banks as part of its proposal to amend its 1975 rule that defines when a person who provides investment advice to an employee benefit plan or IRA becomes a fiduciary. A copy of the ICR may be obtained by contacting the PRA addressee shown below or at *http://www.RegInfo.gov.*

The Department has submitted a copy of the proposed amendments to and partial revocation of PTEs 86–128 and 75–1 to the Office of Management and Budget (OMB) in accordance with 44 U.S.C. 3507(d) for review of its information collections. The Department and OMB are particularly interested in comments that:

• Evaluate whether the collection of information is necessary for the proper performance of the functions of the agency, including whether the information will have practical utility;

• Evaluate the accuracy of the agency's estimate of the burden of the collection of information, including the validity of the methodology and assumptions used;

• Enhance the quality, utility, and clarity of the information to be collected; and

• Minimize the burden of the collection of information on those who are to respond, including through the use of appropriate automated, electronic, mechanical, or other technological collection techniques or other forms of information technology, *e.g.,* permitting electronic submission of responses.

Comments should be sent to the Office of Information and Regulatory Affairs, Office of Management and Budget, Room 10235, New Executive Office Building, Washington, DC 20503; Attention: Desk Officer for the Employee Benefits Security Administration. OMB requests that comments be received within 30 days of publication of the Proposed Amendments to ensure their consideration.

PRA Addressee: Address requests for copies of the ICR to G. Christopher Cosby, Office of Policy and Research, U.S. Department of Labor, Employee Benefits Security Administration, 200 Constitution Avenue NW., Room N–5718, Washington, DC 20210. Telephone (202) 693–8410; Fax: (202) 219–5333. These are not toll-free numbers. ICRs submitted to OMB also are available at *http://www.RegInfo.gov.*

As discussed in detail below, as amended, PTE 86–128 would require financial firms to make certain disclosures to plan fiduciaries in order to receive relief from ERISA's and the Code's prohibited transaction rules for the receipt of commissions and to engage in riskless principal transactions involving mutual fund shares. Financial firms relying on either PTE 86–128 or PTE 75–1, as amended, would be required to maintain records necessary to prove that the conditions of these exemptions have been met. These requirements are information collection requests (ICRs) subject to the Paperwork Reduction Act.

The Department has made the following assumptions in order to establish a reasonable estimate of the paperwork burden associated with these ICRs:

• 38% of disclosures will be distributed electronically via means already used by respondents in the normal course of business and the costs arising from electronic distribution will be negligible;

• Financial institutions will use existing in-house resources to prepare the legal authorizations and disclosures, and maintain the recordkeeping systems necessary to meet the requirements of the exemption;

• A combination of personnel will perform the tasks associated with the ICRs at an hourly wage rate of $125.95 for a financial manager, $30.42 for clerical personnel, and $129.94 for a legal professional; and [24]

• Approximately 2,800 financial institutions [25] will take advantage of this exemption and they will use this exemption in conjunction with transactions involving 25.6 percent of their client plans.[26]

Disclosures and Consent Forms

In order to receive commissions in conjunction with the purchase of mutual fund shares or securities products, sections III(b) and III(d) of PTE 86–128 as amended require financial institutions to obtain advance written authorization from a plan fiduciary independent of the financial institutions (the authorizing fiduciary) and furnish the authorizing fiduciary with information necessary to determine whether an authorization should be made, including a copy of the exemption, a form for termination, a description of the financial institution's brokerage placement practices, and any other reasonably available information regarding the matter that the authorizing fiduciary requests.

Section III(c) requires financial institutions to obtain annual written reauthorization or provide the authorizing fiduciary with an annual termination form explaining that the authorization is terminable at will, without penalty to the plan, and that failure to return the form will result in continued authorization for the financial institution to engage in covered transactions on behalf of the plan. Furthermore, Section III(e) requires the financial institution to provide the authorizing fiduciary with either (a) a confirmation slip for each individual securities transaction within 10 days of the transaction containing the information described in Rule 10b–10(a)(1–7) under the Securities Exchange Act of 1934, 17 CFR 240.10b–10 or (b) a quarterly report containing certain financial information including the total of all transaction-related charges incurred by the plan. The Department assumes that financial institutions will meet this requirement for 40 percent of plans through the provision of a confirmation slip, which already is provided to their clients in the normal course of business, while financial institutions will meet this requirement for 60 percent of plans through provision of the quarterly report.

Finally, Section III(f) requires the financial institution to provide the authorizing fiduciary with an annual summary of the confirmation slips or quarterly reports. The summary must contain the following information: The total of all securities transaction-related charges incurred by the plan during the period in connection with the covered securities transactions, the amount of the securities transaction-related charges retained by the authorized person and the amount of these charges paid to other persons for execution or other services; a description of the financial institution's brokerage placement practices if such practices have materially changed during the period covered by the summary; and a portfolio turnover ratio calculated in a manner reasonable designed to provide the authorizing fiduciary the information needed to assist in discharging its duty of prudence. Section III(i) states that a financial institution that is a discretionary plan trustee who qualifies to use the exemption must provide the authorizing fiduciary with an annual report showing separately the commissions paid to affiliated brokers and non-affiliated brokers, on both a total dollar basis and a cents-per-share basis.

[24] The Department's estimated 2015 hourly labor rates include wages, other benefits, and overhead, and are calculated as follows: Mean wage from the 2013 National Occupational Employment Survey (April 2014, Bureau of Labor Statistics *http://www.bls.gov/news.release/pdf/ocwage.pdf*); wages as a percent of total compensation from the Employer Cost for Employee Compensation (June 2014, Bureau of Labor Statistics *http://www.bls.gov/news.release/ecec.t02.htm*); overhead as a multiple of compensation is assumed to be 25 percent of total compensation for paraprofessionals, 20 percent of compensation for clerical, and 35 percent of compensation for professional; annual inflation assumed to be 2.3 percent annual growth of total labor cost since 2013 (Employment Costs Index data for private industry, September 2014 *http://www.bls.gov/news.release/eci.nr0.htm*).

[25] As described in the regulatory impact analysis for the accompanying rule, the Department estimates that approximately 2,619 broker dealers service the retirement market. The Department anticipates that the exemption will be used primarily, but not exclusively, by broker-dealers. Further, the Department assumes that all broker-dealers servicing the retirement market will use the exemption. Beyond the 2,619 broker-dealers, the Department estimates that almost 200 other financial institutions will use the exemption.

[26] This is a weighted average of the Department's estimates of the share of DB plans and DC plans with broker-dealer relationships. The Department welcomes comment on this estimate.

Legal Costs

According to the 2012 Form 5500, approximately 677,000 plans exist in the United States that could enter into relationships with financial institutions. Of these plans, the Department assumes that 6.5 percent are new plans or plans entering into relationships with new financial institutions and, as stated previously, 25.6 percent of these plans will engage in transactions covered under this PTE. The Department estimates that granting written authorization to the financial institutions will require one hour of legal time for each of the approximately 11,000 plans entering into new relationships with financial institutions each year. The Department also estimates that it will take one hour of legal time for each of the approximately 2,800 financial institutions to produce the annual termination form. This legal work results in a total of approximately 14,000 hours annually at an equivalent cost of $1.8 million.

Production and Distribution of Required Disclosures

The Department estimates that approximately 173,000 plans have relationships with financial institutions and are likely to engage in transactions covered under this exemption. Of these 173,000 plans, approximately 11,000 are new clients to the financial institutions each year.

The Department estimates that 11,000 plans will send financial institutions a two page authorization letter each year. Prior to obtaining authorization, financial institutions will send the same 11,000 plans a seven page pre-authorization disclosure. Paper copies of the authorization letter and the pre-authorization disclosure will be mailed for 62 percent of the plans and distributed electronically for the remaining 38 percent. The Department estimates that electronic distribution will result in a de minimis cost, while paper distribution will cost approximately $10,000. Paper distribution of the letter and disclosure will also require two minutes of clerical preparation time resulting in a total of 500 hours at an equivalent cost of approximately $14,000.

The Department estimates that all of the 173,000 plans will receive a two-page annual termination form from financial institutions; 38 percent will be distributed electronically and 62 percent will be mailed. The Department estimates that electronic distribution will result in a de minimis cost, while the paper distribution will cost $63,000. Paper distribution will also require two minutes of clerical preparation time resulting in a total of 4,000 hours at an equivalent cost of $109,000.

The Department estimates that 60 percent of plans (approximately 104,000) will receive quarterly two-page transaction reports from financial institutions four times per year; 38 percent will be distributed electronically and 62 percent will be mailed. The Department estimates that electronic distribution will result in a de minimis cost, while paper distribution will cost $152,000. Paper distribution will also require two minutes of clerical preparation time resulting in a total of 9,000 hours at an equivalent cost of $261,000.

The Department estimates that all of the 173,000 plans will receive a five-page annual statement with a two-page summary of commissions paid from financial institutions; 38 percent will be distributed electronically and 62 percent will be mailed. The Department assumes that these disclosures will be distributed with the annual termination form, resulting in no further hour burden or postage cost. Electronic distribution will result in a de minimis cost, while the paper distribution will cost $38,000 in materials costs.

Finally, the Department estimates that it will cost financial institutions $3 per plan, for each of the 173,000 plans, to track all the transactions data necessary to populate the quarterly transaction reports, the annual statements, and the report of commissions paid. This results in an IT tracking cost of $520,000.

Recordkeeping Requirement

Section VI of PTE 86–128, as amended, and condition (e) of PTE 75–1, Part II, as amended, would require financial institutions to maintain or cause to be maintained for six years and disclosed upon request the records necessary for the Department, Internal Revenue Service, plan fiduciary, contributing employer or employee organization whose members are covered by the plan, participants and beneficiaries and IRA owners to determine whether the conditions of this exemption have been met.

The Department assumes that each financial institution will maintain these records on behalf of their client plans in their normal course of business. Therefore, the Department has estimated that the additional time needed to maintain records consistent with the exemption will only require about one-half hour, on average, annually for a financial manager to organize and collate the documents or else draft a notice explaining that the information is exempt from disclosure, and an additional 15 minutes of clerical time to make the documents available for inspection during normal business hours or prepare the paper notice explaining that the information is exempt from disclosure. Thus, the Department estimates that a total of 45 minutes of professional time per financial institution per year would be required for a total hour burden of 2,100 hours at an equivalent cost of $198,000.

In connection with this recordkeeping and disclosure requirements discussed above, Section VI(b) of PTE 86–128 and Section (f) of PTE 75–1, Part II, provide that parties relying on the exemption do not have to disclose trade secrets or other confidential information to members of the public (*i.e.,* plan fiduciaries, contributing employers or employee organizations whose members are covered by the plan, participants and beneficiaries and IRA owners), but that in the event a party refuses to disclose information on this basis, it must provide a written notice to the requester advising of the reasons for the refusal and advising that the Department may request such information. The Department's experience indicates that this provision is not commonly invoked, and therefore, the written notice is rarely, if ever, generated. Therefore, the Department believes the cost burden associated with this clause is de minimis. No other cost burden exists with respect to recordkeeping.

Overall Summary

Overall, the Department estimates that in order to meet the conditions of this amended class exemption, over 14,000 financial institutions and plans will produce 958,000 disclosures and notices annually. These disclosures and notices will result in almost 29,000 burden hours annually, at an equivalent cost of $2.4 million. This exemption will also result in a total annual cost burden of almost $783,000.

These paperwork burden estimates are summarized as follows:

Type of Review: Revision of a Currently Approved Information Collection.

Agency: Employee Benefits Security Administration, Department of Labor.

Titles: (1) Proposed Amendment to and Partial Revocation of Prohibited Transaction Exemption (PTE) 86–128 for Securities Transactions Involving Employee Benefit Plans and Broker-Dealers; Proposed Amendment to and Partial Revocation of PTE 75–1, and (2) Proposed Investment Advice Regulation.

OMB Control Number: 1210–0059.

Affected Public: Business or other for-profit.

Estimated Number of Respondents: 14.059.

Estimated Number of Annual Responses: 957,880.

Frequency of Response: Initially, Annually, When engaging in exempted transaction.

Estimated Total Annual Burden Hours: 28,795 hours.

Estimated Total Annual Burden Cost: $782,647.

General Information

The attention of interested persons is directed to the following:

(1) The fact that a transaction is the subject of an exemption under ERISA section 408(a) and Code section 4975(c)(2) does not relieve a fiduciary or other party in interest or disqualified person with respect to a plan from certain other provisions of ERISA and the Code, including any prohibited transaction provisions to which the exemption does not apply and the general fiduciary responsibility provisions of ERISA section 404 which require, among other things, that a fiduciary discharge his or her duties respecting a plan solely in the interests of the participants and beneficiaries of the plan. Additionally, the fact that a transaction is the subject of an exemption does not affect the requirement of Code section 401(a) that the plan must operate for the exclusive benefit of the employees of the employer maintaining the plan and their beneficiaries;

(2) Before an exemption may be granted under ERISA section 408(a) and Code section 4975(c)(2), the Department must find that the exemption is administratively feasible, in the interests of plans and their participants and beneficiaries and IRA owners, and protective of the rights of plan participants and beneficiaries and IRA owners;

(3) If granted, an exemption is applicable to a particular transaction only if the transaction satisfies the conditions specified in the exemption; and

(4) These amended exemptions, if granted, will be supplemental to, and not in derogation of, any other provisions of ERISA and the Code, including statutory or administrative exemptions and transitional rules. Furthermore, the fact that a transaction is subject to an administrative or statutory exemption is not dispositive of whether the transaction is in fact a prohibited transaction.

Written Comments

The Department invites all interested persons to submit written comments on the proposed amendments and proposed revocations to the address and within the time period set forth above. All comments received will be made a part of the public record for this proceeding and will be available for examination on the Department's Internet Web site. Comments should state the reasons for the writer's interest in the proposed amendment and revocation. Comments received will be available for public inspection at the above address.

Proposed Amendment to PTE 86–128

Under section 408(a) of the Employee Retirement Income Security Act of 1974, as amended (ERISA) and section 4975(c)(2) of the Internal Revenue Code of 1986, as amended (the Code), and in accordance with the procedures set forth in 29 CFR part 2570, subpart B (76 FR 66637, 66644 (October 27, 2011)), the Department proposes to amend and restate PTE 86–128 as set forth below:

Section I. Covered Transactions

(a) *Securities Transactions Exemptions.* If each of the conditions of Sections II and III of this exemption is either satisfied or not applicable under Section V, the restrictions of ERISA section 406(b) and the taxes imposed by Code section 4975(a) and (b) by reason of Code section 4975(c)(1)(E) or (F) shall not apply to—(1) A plan fiduciary's using its authority to cause a plan to pay a Commission to that person or a Related Entity as agent for the plan, but only to the extent that such transactions are not excessive, under the circumstances, in either amount or frequency; and (2) A plan fiduciary's acting as the agent in an agency cross transaction for both the plan and one or more other parties to the transaction and the receipt by such person of a Commission from one or more other parties to the transaction.

(b) *Mutual Fund Transactions Exemption.* If each condition of Sections II and IV is either satisfied or not applicable under Section V, the restrictions of ERISA sections 406(a)(1)(A), 406(a)(1)(D) and 406(b) and the taxes imposed by Code section 4975(a) and (b), by reason of Code section 4975(c)(1)(A), (D), (E) and (F), shall not apply to a plan fiduciary's using its authority to cause the plan to purchase shares of an open end investment company registered under the Investment Company Act of 1940 (15 U.S.C. 80a–1 *et seq.*) (Mutual Fund) from such fiduciary, acting as principal, and to the receipt of a Commission by such person in connection with such transaction, but only to the extent that such transactions are not excessive, under the circumstances, in either amount or frequency; provided that, the fiduciary (1) is a broker-dealer registered under the Securities Exchange Act of 1934 (15 U.S.C. 78a *et seq.*), and (2) is not a principal underwriter for, or affiliated with, such Mutual Fund, within the meaning of sections 2(a)(29) and 2(a)(3) of the Investment Company Act of 1940.

(c) *Scope of these Exemptions.* The exemptions set forth in Section I(a) and (b) do not apply to a transaction if (1) the plan is an Individual Retirement Account and (2) the fiduciary engaging in the transaction is a fiduciary by reason of the provision of investment advice for a fee, described in Code section 4975(e)(3)(B) and the applicable regulations.

Section II. Impartial Conduct Standards

If the fiduciary engaging in the covered transaction is a fiduciary within the meaning of ERISA section 3(21)(A)(i) or (ii), or Code section 4975(e)(3)(A) or (B), with respect to the assets involved in the transaction, the following conditions must be satisfied with respect to such transaction to the extent they are applicable to the fiduciary's actions:

(a) When exercising fiduciary authority described in ERISA section 3(21)(A)(i) or (ii), or Code section 4975(e)(3)(A) or (B), with respect to the assets involved in the transaction, the fiduciary acts in the Best Interest of the plan.

(b) All compensation received by the person and any Related Entity in connection with the transaction is reasonable in relation to the total services the person and any Related Entity provide to the plan.

(c) The fiduciary's statements about recommended investments, fees, material conflicts of interest, and any other matters relevant to a plan's investment decisions, are not misleading. For this purpose, a fiduciary's failure to disclose a Material Conflict of Interest relevant to the services the fiduciary is providing or other actions it is taking in relation to a plan's investment decisions is deemed to be a misleading statement

III. Conditions Applicable to Transactions Described in Section I(a)

Except to the extent otherwise provided in Section V of this exemption, Section I of this exemption

applies only if the following conditions are satisfied:

(a) The person engaging in the covered transaction is not a trustee (other than a nondiscretionary trustee), an administrator of the plan, or an employer any of whose employees are covered by the plan. Notwithstanding the foregoing, this condition does not apply to a trustee that satisfies Section III(h) and (i).

(b) The covered transaction is performed under a written authorization executed in advance by a fiduciary of each plan whose assets are involved in the transaction, which plan fiduciary is independent of the person engaging in the covered transaction. The authorization is terminable at will by the plan, without penalty to the plan, upon receipt by the authorized person of written notice of termination.

(c) The authorized person obtains annual reauthorization to engage in transactions pursuant to the exemption in the method set forth in Section III(b). Alternatively, the authorized person may supply a form expressly providing an election to terminate the authorization described in Section III(b) with instructions on the use of the form to the authorizing fiduciary no less than annually. The instructions for such form must include the following information:

(1) The authorization is terminable at will by the plan, without penalty to the plan, when the authorized person receives (via first class mail, personal delivery, or email) from the authorizing fiduciary or other plan official having authority to terminate the authorization, a written notice of the intent of the plan to terminate authorization; and

(2) Failure to return the form or some other written notification of the plan's intent to terminate the authorization within thirty (30) days from the date the termination form is sent to the authorizing fiduciary will result in the continued authorization of the authorized person to engage in the covered transactions on behalf of the plan.

(d) Within three months before an initial authorization is made pursuant to Section III(b), the authorizing fiduciary is furnished with a copy of this exemption, the form for termination of authorization described in Section III(c), a description of the person's brokerage placement practices, and any other reasonably available information regarding the matter that the authorizing fiduciary requests.

(e) The person engaging in a covered transaction furnishes the authorizing fiduciary with either:

(1) A confirmation slip for each securities transaction underlying a covered transaction within ten business days of the securities transaction containing the information described in Rule 10b–10(a)(1–7) under the Securities Exchange Act of 1934; or

(2) at least once every three months and not later than 45 days following the period to which it relates, a report disclosing:

(A) A compilation of the information that would be provided to the plan pursuant to Section III(e)(1) during the three-month period covered by the report;

(B) the total of all securities transaction-related charges incurred by the plan during such period in connection with such covered transactions; and

(C) the amount of the securities transaction-related charges retained by such person, and the amount of such charges paid to other persons for execution or other services. For purposes of this paragraph (e), the words ''incurred by the plan'' shall be construed to mean ''incurred by the pooled fund'' when such person engages in covered transactions on behalf of a pooled fund in which the plan participates.

(f) The authorizing fiduciary is furnished with a summary of the information required under Section III(e)(1) at least once per year. The summary must be furnished within 45 days after the end of the period to which it relates, and must contain the following:

(1) The total of all securities transaction-related charges incurred by the plan during the period in connection with covered securities transactions.

(2) The amount of the securities transaction-related charges retained by the authorized person and the amount of these charges paid to other persons for execution or other services.

(3) A description of the brokerage placement practices of the person that is engaging in the covered transaction, if such practices have materially changed during the period covered by the summary.

(4)(A) A portfolio turnover ratio, calculated in a manner which is reasonably designed to provide the authorizing fiduciary with the information needed to assist in making a prudent determination regarding the amount of turnover in the portfolio. The requirements of this paragraph (f)(4)(A) will be met if the ''annualized portfolio turnover ratio,'' calculated in the manner described in paragraph (f)(4)(B), is contained in the summary.

(B) The ''annualized portfolio turnover ratio'' shall be calculated as a percentage of the plan assets consisting of securities or cash over which the authorized person had discretionary investment authority, or with respect to which such person rendered, or had any responsibility to render, investment advice within the meaning of ERISA section 3(21)(A)(ii), (the portfolio) at any time or times (management period(s)) during the period covered by the report. First, the ''portfolio turnover ratio'' (not annualized) is obtained by dividing (i) the lesser of the aggregate dollar amounts of purchases or sales of portfolio securities during the management period(s) by (ii) the monthly average of the market value of the portfolio securities during all management period(s). Such monthly average is calculated by totaling the market values of the portfolio securities as of the beginning and end of each management period and as of the end of each month that ends within such period(s), and dividing the sum by the number of valuation dates so used. For purposes of this calculation, all debt securities whose maturities at the time of acquisition were one year or less are excluded from both the numerator and the denominator. The ''annualized portfolio turnover ratio'' is then derived by multiplying the ''portfolio turnover ratio'' by an annualizing factor. The annualizing factor is obtained by dividing (iii) the number twelve by (iv) the aggregate duration of the management period(s) expressed in months (and fractions thereof). Examples of the use of this formula are provided in Section VII.

(C) The information described in this paragraph (f)(4) is not required to be furnished in any case where the authorized person has not exercised discretionary authority over trading in the plan's account, nor provided investment advice within the meaning of ERISA section 3(21)(A)(ii), during the period covered by the report.

For purposes of this paragraph (f), the words ''incurred by the plan'' shall be construed to mean ''incurred by the pooled fund'' when such person engages in covered transactions on behalf of a pooled fund in which the plan participates.

(g) If an agency cross transaction to which Section V(a) does not apply is involved, the following conditions must also be satisfied:

(1) The information required under Section III(d) or Section V(c)(1)(B) of this exemption includes a statement to the effect that with respect to agency cross transactions, the person effecting or executing the transactions will have a potentially conflicting division of

loyalties and responsibilities regarding the parties to the transactions;

(2) The summary required under Section III(f) of this exemption includes a statement identifying the total number of agency cross transactions during the period covered by the summary and the total amount of all commissions or other remuneration received or to be received from all sources by the person engaging in the transactions in connection with the transactions during the period;

(3) The person effecting or executing the agency cross transaction has the discretionary authority to act on behalf of, and/or provide investment advice to, either (A) one or more sellers or (B) one or more buyers with respect to the transaction, but not both.

(4) The agency cross transaction is a purchase or sale, for no consideration other than cash payment against prompt delivery of a security for which market quotations are readily available; and

(5) The agency cross transaction is executed or effected at a price that is at or between the independent bid and independent ask prices for the security prevailing at the time of the transaction.

(h) Except pursuant to Section V(b), a trustee (other than a non-discretionary trustee) may engage in a covered transaction only with a plan that has total net assets with a value of at least $50 million and in the case of a pooled fund, the $50 million requirement will be met if 50 percent or more of the units of beneficial interest in such pooled fund are held by plans having total net assets with a value of at least $50 million.

For purposes of the net asset tests described above, where a group of plans is maintained by a single employer or controlled group of employers, as defined in ERISA section 407(d)(7), the $50 million net asset requirement may be met by aggregating the assets of such plans, if the assets are pooled for investment purposes in a single master trust.

(i) The trustee described in Section III(h) engaging in a covered transaction furnishes, at least annually, to the authorizing fiduciary of each plan the following:

(1) The aggregate brokerage commissions, expressed in dollars, paid by the plan to brokerage firms affiliated with the trustee;

(2) the aggregate brokerage commissions, expressed in dollars, paid by the plan to brokerage firms unaffiliated with the trustee;

(3) the average brokerage commissions, expressed as cents per share, paid by the plan to brokerage firms affiliated with the trustee; and

(4) the average brokerage commissions, expressed as cents per share, paid by the plan (to brokerage firms unaffiliated with the trustee.

For purposes of this paragraph (i), the words ''paid by the plan'' shall be construed to mean ''paid by the pooled fund'' when the trustee engages in covered transactions on behalf of a pooled fund in which the plan participates.

(j) In the case of securities transactions involving shares of Mutual Funds, other than exchange traded funds, at the time of the transaction, the shares are purchased or sold at net asset value (NAV) plus a commission, in accordance with applicable securities laws and regulations.

Section IV. Conditions Applicable to Transactions Described in Section I(b)

Section I(b) of this exemption applies only if the following conditions are satisfied:

(a) The fiduciary engaging in the covered transaction customarily purchases and sells securities for its own account in the ordinary course of its business as a broker-dealer.

(b) At the time the transaction is entered into, the terms are at least as favorable to the plan as the terms generally available in an arm's length transaction with an unrelated party.

(c) Except to the extent otherwise provided in Section V, the requirements of Section III(a) through III(f), III(h) and III(i) (if applicable), and III(j) are satisfied with respect to the transaction.

Section V. Exceptions From Conditions

(a) Certain agency cross transactions. Section III of this exemption does not apply in the case of an agency cross transaction, provided that the person effecting or executing the transaction:

(1) Does not render investment advice to any plan for a fee within the meaning of ERISA section 3(21)(A)(ii) with respect to the transaction;

(2) is not otherwise a fiduciary who has investment discretion with respect to any plan assets involved in the transaction, *see* 29 CFR 2510.3–21(d); and

(3) does not have the authority to engage, retain or discharge any person who is or is proposed to be a fiduciary regarding any such plan assets.

(b) Recapture of profits. Sections III(a) and III(i) do not apply in any case where the person who is engaging in a covered transaction returns or credits to the plan all profits earned by that person and any Related Entity in connection with the securities transactions associated with the covered transaction.

(c) Special rules for pooled funds. In the case of a person engaging in a covered transaction on behalf of an account or fund for the collective investment of the assets of more than one plan (a pooled fund):

(1) Sections III(b), (c) and (d) of this exemption do not apply if—

(A) the arrangement under which the covered transaction is performed is subject to the prior and continuing authorization, in the manner described in this paragraph (c)(1), of a plan fiduciary with respect to each plan whose assets are invested in the pooled fund who is independent of the person. The requirement that the authorizing fiduciary be independent of the person shall not apply in the case of a plan covering only employees of the person, if the requirements of Section V(c)(2)(A) and (B) are met.

(B) The authorizing fiduciary is furnished with any information that is reasonably necessary to determine whether the authorization should be given or continued, not less than 30 days prior to implementation of the arrangement or material change thereto, including (but not limited to) a description of the person's brokerage placement practices, and, where requested any other reasonably available information regarding the matter upon the reasonable request of the authorizing fiduciary at any time.

(C) In the event an authorizing fiduciary submits a notice in writing to the person engaging in or proposing to engage in the covered transaction objecting to the implementation of, material change in, or continuation of, the arrangement, the plan on whose behalf the objection was tendered is given the opportunity to terminate its investment in the pooled fund, without penalty to the plan, within such time as may be necessary to effect the withdrawal in an orderly manner that is equitable to all withdrawing plans and to the nonwithdrawing plans. In the case of a plan that elects to withdraw under this subparagraph (c)(1)(C), the withdrawal shall be effected prior to the implementation of, or material change in, the arrangement; but an existing arrangement need not be discontinued by reason of a plan electing to withdraw.

(D) In the case of a plan whose assets are proposed to be invested in the pooled fund subsequent to the implementation of the arrangement and that has not authorized the arrangement in the manner described in Section V(c)(1)(B) and (C), the plan's investment in the pooled fund is subject to the prior written authorization of an authorizing

fiduciary who satisfies the requirements of subparagraph (c)(1)(A).

(2) Section III(a) of this exemption, to the extent that it prohibits the person from being the employer of employees covered by a plan investing in a pool managed by the person, does not apply if—

(A) The person is an ''investment manager'' as defined in section 3(38) of ERISA, and

(B) Either (i) the person returns or credits to the pooled fund all profits earned by the person and any Related Entity in connection with all covered transactions engaged in by the fund, or (ii) the pooled fund satisfies the requirements of paragraph V(c)(3).

(3) A pooled fund satisfies the requirements of this paragraph for a fiscal year of the fund if—

(A) On the first day of such fiscal year, and immediately following each acquisition of an interest in the pooled fund during the fiscal year by any plan covering employees of the person, the aggregate fair market value of the interests in such fund of all plans covering employees of the person does not exceed twenty percent of the fair market value of the total assets of the fund; and

(B) The aggregate brokerage commissions received by the person and any Related Entity, in connection with covered transactions engaged in by the person on behalf of all pooled funds in which a plan covering employees of the person participates, do not exceed five percent of the total brokerage commissions received by the person and any Related Entity from all sources in such fiscal year.

Section VI. Recordkeeping Requirements

(a) The plan fiduciary engaging in the covered transactions maintains or causes to be maintained for a period of six years, in a manner that is accessible for audit and examination, the records necessary to enable the persons described in Section VI(b) to determine whether the conditions of this exemption have been met, except that:

(1) If the records necessary to enable the persons described in Section VI(b) below to determine whether the conditions of the exemption have been met are lost or destroyed, due to circumstances beyond the control of the such plan fiduciary, then no prohibited transaction will be considered to have occurred solely on the basis of the unavailability of those records; and

(2) No party in interest, other than such plan fiduciary who is responsible for record-keeping, shall be subject to the civil penalty that may be assessed under ERISA section 502(i) or the taxes imposed by Code section 4975(a) and (b) if the records are not maintained or are not available for examination as required by paragraph (b) below; and

(b)(1) Except as provided below in subparagraph (2) and notwithstanding any provisions of ERISA section 504(a)(2) and (b), the records referred to in the above paragraph are unconditionally available at their customary location for examination during normal business hours by—

(A) Any duly authorized employee or representative of the Department or the Internal Revenue Service;

(B) Any fiduciary of the plan or any duly authorized employee or representative of such fiduciary;

(C) Any contributing employer and any employee organization whose members are covered by the plan, or any authorized employee or representative of these entities; or

(D) Any participant or beneficiary of the plan or the duly authorized representative of such participant or beneficiary; and

(2) None of the persons described in subparagraph (1)(B)–(D) above shall be authorized to examine trade secrets or commercial or financial information of such fiduciary which is privileged or confidential.

(3) Should such plan fiduciary refuse to disclose information on the basis that such information is exempt from disclosure, such plan fiduciary shall, by the close of the thirtieth (30th) day following the request, provide a written notice advising that person of the reasons for the refusal and that the Department may request such information.

Section VII. Definitions

The following definitions apply to this exemption:

(a) The term ''person'' includes the person and affiliates of the person.

(b) An ''affiliate'' of a person includes the following:

(1) Any person directly or indirectly, through one or more intermediaries, controlling, controlled by, or under common control with, the person;

(2) Any officer, director, partner, employee, relative (as defined in ERISA section 3(15)), brother, sister, or spouse of a brother or sister, of the person; and

(3) Any corporation or partnership of which the person is an officer, director or employee or in which such person is a partner.

A person is not an affiliate of another person solely because one of them has investment discretion over the other's assets. The term ''control'' means the power to exercise a controlling influence over the management or policies of a person other than an individual.

(c) An ''agency cross transaction'' is a securities transaction in which the same person acts as agent for both any seller and any buyer for the purchase or sale of a security.

(d) The term ''covered transaction'' means an action described in Section I of this exemption.

(e) The term ''effecting or executing a securities transaction'' means the execution of a securities transaction as agent for another person and/or the performance of clearance, settlement, custodial or other functions ancillary thereto.

(f) A plan fiduciary is ''independent'' of a person if it (1) is not the person, (2) does not receive compensation or other consideration for his or her own account from the person, and (3) does not have a relationship to or an interest in the person that might affect the exercise of the person's best judgment in connection with transactions described in this exemption. Notwithstanding the foregoing, if the plan is an individual retirement account not subject to title I of ERISA, and is beneficially owned by an employee, officer, director or partner of the person engaging in covered transactions with the IRA pursuant to this exemption, such beneficial owner is deemed ''independent'' for purposes of this definition.

(g) The term ''profit'' includes all charges relating to effecting or executing securities transactions, less reasonable and necessary expenses including reasonable indirect expenses (such as overhead costs) properly allocated to the performance of these transactions under generally accepted accounting principles.

(h) The term ''securities transaction'' means the purchase or sale of securities.

(i) The term ''nondiscretionary trustee'' of a plan means a trustee or custodian whose powers and duties with respect to any assets of the plan are limited to (1) the provision of nondiscretionary trust services to the plan, and (2) duties imposed on the trustee by any provision or provisions of ERISA or the Code. The term ''nondiscretionary trust services'' means custodial services and services ancillary to custodial services, none of which services are discretionary. For purposes of this exemption, a person does not fail to be a nondiscretionary trustee solely by reason of having been delegated, by the sponsor of a master or prototype plan, the power to amend such plan.

(j) The term ''plan'' means an employee benefit plan described in ERISA section 3(3) and any plan

described in Code section 4975(e)(1) (including an Individual Retirement Account as defined in VII(k)).

(k) The terms ''Individual Retirement Account'' or ''IRA'' mean any trust, account or annuity described in Code section 4975(e)(1)(B) through (F), including, for example, an individual retirement account described in section 408(a) of the Code and a health savings account described in section 223(d) of the Code.

(l) The term ''Related Entity'' means an entity, other than an affiliate, in which a person has an interest which may affect the person's exercise of its best judgment as a fiduciary.

(m) A fiduciary acts in the ''Best Interest'' of the plan when the fiduciary acts with the care, skill, prudence, and diligence under the circumstances then prevailing that a prudent person would exercise based on the investment objectives, risk tolerance, financial circumstances, and needs of the plan, without regard to the financial or other interests of the fiduciary, its affiliate, a Related Entity or any other party.

(n) The term ''Commission'' means a brokerage commission or sales load paid for the service of effecting or executing the transaction, but not a 12b–1 fee, revenue sharing payment, marketing fee, administrative fee, sub-TA fee or sub-accounting fee.

(o) A ''Material Conflict of Interest'' exists when person has a financial interest that could affect the exercise of its best judgment as a fiduciary in rendering advice to a Plan or IRA.

Section VIII. Examples Illustrating the Use of the Annualized Portfolio Turnover Ratio Described in Section III(f)(4)(B)

(a) M, an investment manager affiliated with a broker dealer that M uses to effect securities transactions for the accounts that it manages, exercises investment discretion over the account of plan P for the period January 1, 2014, though June 30, 2014, after which the relationship between M and P ceases. The market values of P's account with A at the relevant times (excluding debt securities having a maturity of one year or less at the time of acquisition) are:

Date	Market value ($ millions)
January 1, 2014	10.4
January 31, 2014	10.2
February 28, 2014	9.9
March 31, 2014	10.0
April 30, 2014	10.6
May 31, 2014	11.5
June 30, 2014	12.0
Sum of market value	74.6

Aggregate purchases during the 6-month period were $850,000; aggregate sales were $1,000,000, excluding in each case debt securities having a maturity of one year or less at the time of acquisition.

For purposes of Section III(f)(4) of this exemption, M computes the annualized portfolio turnover as follows:

A = $850,000 (lesser of purchases or sales)

B = $10,657,143 ($74.6 million divided by 7, *i.e.,* number of valuation dates)

Annualizing factor = C/D = 12/6 = 2

Annualized portfolio turnover ratio = 2 × (850,000/10,657,143) = 0.160 = 16.0 percent

(b) Same facts as (a), except that M manages the portfolio through July 15, 2014, and, in addition, resumes management of the portfolio on November 10, 2014, through the end of the year. The additional relevant valuation dates and portfolio values are:

Dates	Market value ($ millions)
July 15, 2014	12.2
November 10, 2014	9.4
November 30, 2014	9.6
December 31, 2014	9.8
Sum of market values	41.0

During the periods July 1, 2014, through July 15, 2014, and November 10, 2014, through December 31, 2014, there were an additional $650,000 of purchases and $400,000 of sales. Thus, total purchases were $1,500,000 (*i.e.,* $850,000 + $650,000) and total sales were $1,400,000 (*i.e.,* $1,000,000 + $400,000) for the management periods.

M now computes the annualized portfolio turnover as follows:

A = $1,400,000 (lesser of aggregate purchases or sales)

B = $10,509,091 ($10,509,091 ($115.6 million divided by 11)

Annualizing factor = C/D = 12/ (6.5 + 1.67) = 1.47

Annualized portfolio turnover ratio = 1.47 × (1,400,000/10,509,091) = 0.196 = 19.6 percent.

Proposed Revocation of Parts I(b), I(c) and II(2) of PTE 75–1 and Restatement of PTE 75–1

The Department is proposing to revoke Parts I(b), I(c) and II(2) of PTE 75–1. In connection with the proposed revocation of Part II(2), the Department is republishing Part II of PTE 75–1. Part II of PTE 75–1 shall read as follows:

The restrictions of section 406(a) of the Employee Retirement Income Security Act of 1974 (the Act) and the taxes imposed by section 4975(a) and (b) of the Internal Revenue Code of 1986 (the Code), by reason of section 4975(c)(1)(A) through (D) of the Code, shall not apply to any purchase or sale of a security between an employee benefit plan and a broker-dealer registered under the Securities Exchange Act of 1934 (15 U.S.C. 78a *et seq.*), a reporting dealer who makes primary markets in securities of the United States Government or of any agency of the United States Government (Government securities) and reports daily to the Federal Reserve Bank of New York its positions with respect to Government securities and borrowings thereon, or a bank supervised by the United States or a State if the following conditions are met:

(a) In the case of such broker-dealer, it customarily purchases and sells securities for its own account in the ordinary course of its business as a broker-dealer.

(b) In the case of such reporting dealer or bank, it customarily purchases and sells Government securities for its own account in the ordinary course of its business and such purchase or sale between the plan and such reporting dealer or bank is a purchase or sale of Government securities.

(c) Such transaction is at least as favorable to the plan as an arm's length transaction with an unrelated party would be, and it was not, at the time of such transaction, a prohibited transaction within the meaning of section 503(b) of the Code.

(d) Neither the broker-dealer, reporting dealer, bank, nor any affiliate thereof has or exercises any discretionary authority or control (except as a directed trustee) with respect to the investment of the plan assets involved in the transaction, or renders investment advice (within the meaning of 29 CFR 2510.3–21(c)) with respect to those assets.

(e) The broker-dealer, reporting dealer, or bank engaging in the covered transaction maintains or causes to be maintained for a period of six years from the date of such transaction such records as are necessary to enable the persons described in paragraph (f) of this exemption to determine whether the conditions of this exemption have been met, except that:

(1) No party in interest other than the broker-dealer, reporting dealer, or bank engaging in the covered transaction, shall be subject to the civil penalty, which may be assessed under section 502(i) of the Act, or to the taxes imposed by section 4975(a) and (b) of the Code, if such records are not maintained, or are not available for examination as required by paragraph (f) below; and

(2) A prohibited transaction will not be deemed to have occurred if, due to circumstances beyond the control of the broker-dealer, reporting dealer, or bank, such records are lost or destroyed prior to the end of such six year period.

(f)(1) Notwithstanding anything to the contrary in subsections (a)(2) and (b) of section 504 of the Act, the records referred to in paragraph (e) are unconditionally available for examination during normal business hours by:

A. Any duly authorized employee or representative of the Department or the Internal Revenue Service;

B. Any fiduciary of the plan or any duly authorized employee or representative of such fiduciary;

C. Any contributing employer and any employee organization whose members are covered by the plan, or any authorized employee or representative of these entities; or

D. Any participant or beneficiary of the plan or the duly authorized representative of such participant or beneficiary; and

(2) None of the persons described in subparagraph (1)(B)–(D) above shall be authorized to examine trade secrets or commercial or financial information of the broker-dealer, reporting dealer, or bank which is privileged or confidential.

(3) Should such broker-dealer, reporting dealer, or bank refuse to disclose information on the basis that such information is exempt from disclosure, the broker-dealer, reporting dealer, or bank shall, by the close of the thirtieth (30th) day following the request, provide a written notice advising that person of the reasons for the refusal and that the Department may request such information.

For purposes of this exemption, the terms ''broker-dealer,'' ''reporting dealer'' and ''bank'' shall include such persons and any affiliates thereof, and the term ''affiliate'' shall be defined in the same manner as that term is defined in 29 CFR 2510.3–21(e) and 26 CFR 54.4975–9(e).

Signed at Washington, DC, this 14th day of April, 2015.

Phyllis C. Borzi,

Assistant Secretary, Employee Benefits Security Administration, Department of Labor.

[FR Doc. 2015–08838 Filed 4–15–15; 11:15 am]

BILLING CODE 4510–29–P

DEPARTMENT OF LABOR

Employee Benefits Security Administration

29 CFR Part 2550

[Application Number D–11820]

ZRIN 1210–ZA25

Proposed Amendments to Class Exemptions 75–1, 77–4, 80–83 and 83–1

AGENCY: Employee Benefits Security Administration (EBSA), U.S. Department of Labor.

ACTION: Notice of proposed amendments to class exemptions.

SUMMARY: This document contains a notice of pendency before the Department of Labor of proposed amendments to prohibited transaction exemptions (PTEs) 75–1, 77–4, 80–83 and 83–1. Generally, the Employee Retirement Income Security Act of 1974 (ERISA) and the Internal Revenue Code (the Code) prohibit fiduciaries with respect to employee benefit plans and individual retirement accounts (IRAs) from engaging in self-dealing, including using their authority, control or responsibility to affect or increase their own compensation. These existing exemptions generally permit fiduciaries to receive compensation or other benefits as a result of the use of their fiduciary authority, control or responsibility in connection with investment transactions involving plans or IRAs. The proposed amendments would require the fiduciaries to satisfy uniform Impartial Conduct Standards in order to obtain the relief available under each exemption. The proposed amendments would affect participants and beneficiaries of plans, IRA owners, and fiduciaries with respect to such plans and IRAs.

DATES: *Comments:* Written comments must be received by the Department on or before July 6, 2015.

Applicability: The Department proposes to make these amendments applicable eight months after publication of the final exemption in the **Federal Register**.

ADDRESSES: All written comments concerning the proposed amendments to the class exemptions should be sent to the Office of Exemption Determinations by any of the following methods, identified by ZRIN: 1210–ZA25:

Federal eRulemaking Portal: http://www.regulations.gov at Docket ID number: EBSA–2014–0016. Follow the instructions for submitting comments.

Email to: e-OED@ dol.gov.

Fax to: (202) 693–8474.

Mail: Office of Exemption Determinations, Employee Benefits Security Administration, (Attention: D–11820), U.S. Department of Labor, 200 Constitution Avenue NW., Suite 400, Washington, DC 20210.

Hand Delivery/Courier: Office of Exemption Determinations, Employee Benefits Security Administration, (Attention: D–11820), U.S. Department of Labor, 122 C St. NW., Suite 400, Washington, DC 20001. *Instructions.* All comments must be received by the end of the comment period. The comments received will be available for public inspection in the Public Disclosure Room of the Employee Benefits Security Administration, U.S. Department of Labor, Room N–1513, 200 Constitution Avenue NW., Washington, DC 20210. Comments will also be available online at *www.regulations.gov,* at Docket ID number: EBSA–2014–0016 and *www.dol.gov/ebsa,* at no charge.

Warning: All comments will be made available to the public. Do not include any personally identifiable information (such as Social Security number, name, address, or other contact information) or confidential business information that you do not want publicly disclosed. All comments may be posted on the Internet and can be retrieved by most Internet search engines.

FOR FURTHER INFORMATION CONTACT: Brian Shiker, Office of Exemption Determinations, Employee Benefits Security Administration, U.S. Department of Labor, (202) 693–8854 (this is not a toll-free number).

SUPPLEMENTARY INFORMATION: The Department is proposing the amendments to the class exemptions on its own motion, pursuant to ERISA section 408(a) and Code section 4975(c)(2), and in accordance with the procedures set forth in 29 CFR part 2570, subpart B (76 FR 66637 (October 27, 2011)).

Executive Summary

Purpose of Regulatory Action

The Department is proposing these amendments to existing class exemptions in connection with its proposed regulation defining a fiduciary under ERISA section 3(21)(A)(ii) and Code section 4975(e)(3)(B) (Proposed Regulation), published elsewhere in this issue of the **Federal Register**. The Proposed Regulation specifies when an entity is a fiduciary by reason of the provision of investment advice for a fee or other compensation regarding assets of a plan or IRA. If adopted, the Proposed Regulation would replace an

existing regulation that was adopted in 1975. The Proposed Regulation is intended to take into account the advent of 401(k) plans and IRAs, the dramatic increase in rollovers, and other developments that have transformed the retirement plan landscape and the associated investment market over the four decades since the existing regulation was issued. In light of the extensive changes in retirement investment practices and relationships, the Proposed Regulation would update existing rules to distinguish more appropriately between the sorts of advice relationships that should be treated as fiduciary in nature and those that should not.

This notice proposes that new ''Impartial Conduct Standards'' be made conditions of the following exemptions: PTEs 75–1, Part III, 75–1, Part IV, 77–4, 80–83 and 83–1. Fiduciaries would be required to act in accordance with these standards in transactions permitted by the exemptions. The standards will be uniformly imposed in multiple class exemptions, including new proposed exemptions published elsewhere in this issue of the **Federal Register**, to ensure that fiduciaries relying on the exemptions are held to a uniform set of standards and that these standards are applicable to transactions involving both plans and IRAs. The proposed amendments, if granted, would apply prospectively to fiduciaries relying on the exemptions.

Section 408(a) of ERISA specifically authorizes the Secretary of Labor to grant administrative exemptions from ERISA's prohibited transaction provisions.[1] Regulations at 29 CFR 2570.30 to 2570.52 describe the procedures for applying for an administrative exemption. Before granting an exemption, the Department must find that it is administratively feasible, in the interests of plans and their participants and beneficiaries and IRA owners, and protective of the rights of participants and beneficiaries of such plans and IRA owners. Interested parties are permitted to submit comments to the Department on these proposed amendments, through July 6, 2015. Additionally, the Department plans to hold an administrative hearing within 30 days of the close of the comment period. The Department will ensure ample opportunity for public comment by reopening the record following the hearing and publication of the hearing transcript. Specific information regarding the date, location and submission of requests to testify will be published in a notice in the **Federal Register**.

Summary of the Major Provisions

The proposal would amend prohibited transaction exemptions 75–1, Part III, 75–1, Part IV, 77–4, 80–83 and 83–1. Each proposed amendment would apply the same Impartial Conduct Standards. The amendments would require a fiduciary that satisfies ERISA section 3(21)(A)(i) or (ii), or the corresponding provisions of Code section 4975(e)(3)(A) or (B), with respect to the assets involved in the investment transaction, to meet the standards with respect to the investment transactions described in the applicable exemption.

Regulatory Impact Analysis

Executive Order 12866 and 13563 Statement

Under Executive Orders 12866 and 13563, the Department must determine whether a regulatory action is ''significant'' and therefore subject to the requirements of the Executive Order and subject to review by the Office of Management and Budget (OMB). Executive Orders 13563 and 12866 direct agencies to assess all costs and benefits of available regulatory alternatives and, if regulation is necessary, to select regulatory approaches that maximize net benefits (including potential economic, environmental, public health and safety effects, distributive impacts, and equity). Executive Order 13563 emphasizes the importance of quantifying both costs and benefits, of reducing costs, of harmonizing and streamlining rules, and of promoting flexibility. It also requires federal agencies to develop a plan under which the agencies will periodically review their existing significant regulations to make the agencies' regulatory programs more effective or less burdensome in achieving their regulatory objectives.

Under Executive Order 12866, ''significant'' regulatory actions are subject to the requirements of the Executive Order and review by the Office of Management and Budget (OMB). Section 3(f) of Executive Order 12866, defines a ''significant regulatory action'' as an action that is likely to result in a rule (1) having an annual effect on the economy of $100 million or more, or adversely and materially affecting a sector of the economy, productivity, competition, jobs, the environment, public health or safety, or State, local or tribal governments or communities (also referred to as ''economically significant'' regulatory actions); (2) creating serious inconsistency or otherwise interfering with an action taken or planned by another agency; (3) materially altering the budgetary impacts of entitlement grants, user fees, or loan programs or the rights and obligations of recipients thereof; or (4) raising novel legal or policy issues arising out of legal mandates, the President's priorities, or the principles set forth in the Executive Order. Pursuant to the terms of the Executive Order, OMB has determined that this action is ''significant'' within the meaning of Section 3(f)(4) of the Executive Order. Accordingly, the Department has undertaken an assessment of the costs and benefits of the proposed amendment, and OMB has reviewed this regulatory action.

Background

Proposed Regulation

As explained more fully in the preamble to the Department's Proposed Regulation on the definition of fiduciary under ERISA section 3(21)(A)(ii) and Code section 4975(e)(3)(B), also published in this issue of the **Federal Register**, ERISA is a comprehensive statute designed to protect the interests of plan participants and beneficiaries, the integrity of employee benefit plans, and the security of retirement, health, and other critical benefits. The broad public interest in ERISA-covered plans is reflected in its imposition of stringent fiduciary responsibilities on parties engaging in important plan activities, as well as in the tax-favored status of plan assets and investments. One of the chief ways in which ERISA protects employee benefit plans is by requiring that plan fiduciaries comply with fundamental obligations rooted in the law of trusts. In particular, plan fiduciaries must manage plan assets prudently and with undivided loyalty to the plans and their participants and beneficiaries.[2] In addition, they must refrain from engaging in ''prohibited transactions,'' which ERISA forbids because of the dangers posed by the fiduciaries' conflicts of interest with respect to the transactions.[3] When fiduciaries violate

[1] Code section 4975(c)(2) authorizes the Secretary of the Treasury to grant exemptions from the parallel prohibited transaction provisions of the Code. Reorganization Plan No. 4 of 1978 (5 U.S.C. app. at 214 (2000)) generally transferred the authority of the Secretary of the Treasury to grant administrative exemptions under Code section 4975 to the Secretary of Labor. References in this document to sections of ERISA should be read to refer also to the corresponding sections of the Code. These proposed amendments to the class exemptions would apply to relief from the indicated prohibited transaction provisions of both ERISA and the Code.

[2] ERISA section 404(a).

[3] ERISA section 406. ERISA also prohibits certain transactions between a plan and a ''party in interest.''

ERISA's fiduciary duties or the prohibited transaction rules, they may be held personally liable for the breach.[4] In addition, violations of the prohibited transaction rules are subject to excise taxes under the Code.

The Code also has rules regarding fiduciary conduct with respect to tax-favored accounts that are not generally covered by ERISA, such as IRAs. Although ERISA's general fiduciary obligations of prudence and loyalty do not govern the fiduciaries of IRAs, these fiduciaries are subject to the prohibited transaction rules. In this context, fiduciaries engaging in the illegal transactions are subject to an excise tax enforced by the Internal Revenue Service. Unlike participants in plans covered by Title I of ERISA, under the Code, IRA owners cannot bring suit against fiduciaries under ERISA for violation of the prohibited transaction rules and fiduciaries are not personally liable to IRA owners for the losses caused by their misconduct. Elsewhere in this issue of the **Federal Register**, however, the Department is proposing two new class exemptions that would create contractual obligations for the adviser to adhere to certain standards (the Impartial Conduct Standards). IRA owners would have a right to enforce these new contractual rights.

Under this statutory framework, the determination of who is a ''fiduciary'' is of central importance. Many of ERISA's protections, duties, and liabilities hinge on fiduciary status. In relevant part, section 3(21)(A) of ERISA and section 4975(e)(3) of the Code provide that a person is a fiduciary with respect to a plan or IRA to the extent he or she (1) exercises any discretionary authority or discretionary control with respect to management of such plan or IRA, or exercises any authority or control with respect to management or disposition of its assets; (2) renders investment advice for a fee or other compensation, direct or indirect, with respect to any moneys or other property of such plan or IRA, or has any authority or responsibility to do so; or, (3) has any discretionary authority or discretionary responsibility in the administration of such plan or IRA.

The statutory definition deliberately casts a wide net in assigning fiduciary responsibility with respect to plan and IRA assets. Thus, ''any authority or control'' over plan or IRA assets is sufficient to confer fiduciary status, and any persons who render ''investment advice for a fee or other compensation, direct or indirect'' are fiduciaries, regardless of whether they have direct control over the plan's or IRA's assets and regardless of their status as an investment adviser or broker under the federal securities laws. The statutory definition and associated fiduciary responsibilities were enacted to ensure that plans and IRAs can depend on persons who provide investment advice for a fee to provide recommendations that are untainted by conflicts of interest. In the absence of fiduciary status, persons who provide investment advice would neither be subject to ERISA's fundamental fiduciary standards, nor accountable for imprudent, disloyal, or tainted advice under ERISA or the Code, no matter how egregious the misconduct or how substantial the losses. Plans, individual participants and beneficiaries, and IRA owners often are not financial experts and consequently must rely on professional advice to make critical investment decisions. The statutory definition, prohibitions on conflicts of interest, and core fiduciary obligations of prudence and loyalty, all reflect Congress' recognition in 1974 of the fundamental importance of such advice. In the years since then, the significance of financial advice has become still greater with increased reliance on participant-directed plans and IRAs for the provision of retirement benefits.

In 1975, the Department issued a regulation, at 29 CFR 2510.3–21(c) defining the circumstances under which a person is treated as providing ''investment advice'' to an employee benefit plan within the meaning of section 3(21)(A)(ii) of ERISA (the ''1975 regulation'').[5] The regulation narrowed the scope of the statutory definition of fiduciary investment advice by creating a five-part test that must be satisfied before a person can be treated as rendering investment advice for a fee. Under the regulation, for advice to constitute ''investment advice,'' an adviser who does not have discretionary authority or control with respect to the purchase or sale of securities or other property of the plan must—(1) render advice as to the value of securities or other property, or make recommendations as to the advisability of investing in, purchasing or selling securities or other property (2) on a regular basis (3) pursuant to a mutual agreement, arrangement or understanding, with the plan or a plan fiduciary that (4) the advice will serve as a primary basis for investment decisions with respect to plan assets, and that (5) the advice will be individualized based on the particular needs of the plan. The regulation provides that an adviser is a fiduciary with respect to any particular instance of advice only if he or she meets each and every element of the five-part test with respect to the particular advice recipient or plan at issue. A 1976 Department of Labor Advisory Opinion further limited the application of the statutory definition of ''investment advice'' by stating that valuations of employer securities in connection with employee stock ownership plan (ESOP) purchases would not be considered fiduciary advice.[6]

As the marketplace for financial services has developed in the years since 1975, the five-part test may now undermine, rather than promote, the statutes' text and purposes. The narrowness of the 1975 regulation allows professional advisers, consultants and valuation firms to play a central role in shaping plan investments, without ensuring the accountability that Congress intended for persons having such influence and responsibility when it enacted ERISA and the related Code provisions. Even when plan sponsors, participants, beneficiaries and IRA owners clearly rely on paid consultants for impartial guidance, the regulation allows consultants to avoid fiduciary status and disregard ERISA's fiduciary obligations of care and prohibitions on disloyal and conflicted transactions. As a consequence, these advisers can steer customers to investments based on their own self-interest, give imprudent advice, and engage in transactions that would otherwise be categorically prohibited by ERISA and Code, without any liability under ERISA or the Code. In the Proposed Regulation, the Department seeks to replace the existing regulation with one that more appropriately distinguishes between the sorts of advice relationships that should be treated as fiduciary in nature and those that should not, in light of the legal framework and financial marketplace in which plans and IRAs currently operate.[7]

The Proposed Regulation describes the types of advice that constitute ''investment advice'' with respect to plan or IRA assets for purposes of the

[4] ERISA section 409; *see also* ERISA section 405.

[5] The Department of Treasury issued a virtually identical regulation, at 26 CFR 54.4975–9(c), which interprets Code section 4975(e)(3).

[6] Advisory Opinion 76–65A (June 7, 1976).

[7] The Department initially proposed an amendment to its regulation under ERISA section 3(21)(A)(ii) and Code section 4975(e)(3)(B) on October 22, 2010, at 75 FR 65263. It subsequently announced its intention to withdraw the proposal and propose a new rule, consistent with the President's Executive Orders 12866 and 13563, in order to give the public a full opportunity to evaluate and comment on the new proposal and updated economic analysis.

definition of a fiduciary at ERISA section 3(21)(A)(ii) and Code section 4975(e)(3)(B). The proposal provides, subject to certain carve-outs, that a person renders investment advice with respect to a plan or IRA if, among other things, the person provides, directly to a plan, a plan fiduciary, a plan participant or beneficiary, IRA or IRA owner one of the following types of advice:

(1) A recommendation as to the advisability of acquiring, holding, disposing or exchanging securities or other property, including a recommendation to take a distribution of benefits or a recommendation as to the investment of securities or other property to be rolled over or otherwise distributed from a plan or IRA;

(2) A recommendation as to the management of securities or other property, including recommendations as to the management of securities or other property to be rolled over or otherwise distributed from the plan or IRA;

(3) An appraisal, fairness opinion or similar statement, whether verbal or written, concerning the value of securities or other property, if provided in connection with a specific transaction or transactions involving the acquisition, disposition or exchange of such securities or other property by the plan or IRA; and

(4) A recommendation of a person who is also going to receive a fee or other compensation for providing any of the types of advice described in paragraphs (1) through (3), above.

In addition, to be a fiduciary, such person must either (1) represent or acknowledge that it is acting as a fiduciary within the meaning of ERISA (or the Code) with respect to the advice, or (2) render the advice pursuant to a written or verbal agreement, arrangement or understanding that the advice is individualized to, or that such advice is specifically directed to, the advice recipient for consideration in making investment or management decisions with respect to securities or other property of the plan or IRA.

For advisers who do not represent that they are acting as ERISA (or Code) fiduciaries, the Proposed Regulation provides that advice rendered in conformance with certain carve-outs will not cause the adviser to be treated as a fiduciary under ERISA or the Code. For example, under the seller's carve-out, counterparties in arm's length transactions with plans may make investment recommendations without acting as fiduciaries if certain conditions are met.[8] Similarly, the proposal contains a carve-out from fiduciary status for persons who provide appraisals, fairness opinions, or statements of value in specified contexts (*e.g.,* with respect to ESOP transactions). The proposal additionally carves out from fiduciary status the marketing of investment alternative platforms, certain assistance in selecting investment alternatives and other activities. Finally, the Proposed Regulation contains a carve-out from fiduciary status for the provision of investment education.

Prohibited Transactions

Fiduciaries under ERISA and the Code are subject to certain prohibited transaction restrictions. ERISA section 406(b)(1) and Code section 4975(c)(1)(E) prohibit a fiduciary from dealing with the income or assets of a plan or IRA in his own interest or his own account. ERISA section 406(b)(2) provides that a fiduciary with respect to an employee benefit plan shall not ''in his individual or in any other capacity act in any transaction involving the plan on behalf of a party (or represent a party) whose interests are adverse to the interests of the plan or the interests of its participants or beneficiaries.'' [9] ERISA section 406(b)(3) and Code section 4975(c)(1)(F) prohibit a fiduciary from receiving any consideration for his own personal account from any party dealing with the plan or IRA in connection with a transaction involving the plan or IRA. Parallel regulations issued by the Departments of Labor and the Treasury explain that these provisions impose on fiduciaries a duty not to act on conflicts of interest that may affect the fiduciary's best judgment on behalf of the plan or IRA.[10]

Prohibited Transaction Exemptions

ERISA and the Code counterbalance the broad proscriptive effect of the prohibited transaction provisions with numerous statutory exemptions. For example, ERISA section 408(b)(14) and Code section 4975(d)(17) specifically exempt transactions in connection with the provision of fiduciary investment advice to a participant or beneficiary of an individual account plan or IRA owner, where the advice, resulting transaction, and the adviser's fees meet certain conditions. ERISA and the Code also provide for administrative exemptions that the Secretary of Labor may grant on an individual or class basis if the Secretary finds that the exemption is (1) administratively feasible, (2) in the interests of plans and of their participants and beneficiaries and IRA owners and (3) protective of the rights of the participants and beneficiaries of such plans and IRA owners.

Over the years, the Department has granted several conditional administrative class exemptions from the prohibited transactions provisions of ERISA and the Code pursuant to which fiduciaries may receive compensation or other benefits in connection with investment transactions by plans and IRAs, under circumstances that would otherwise violate ERISA section 406(b) and Code section 4975(c)(1)(E) and (F). The exemptions focus on specific types of transactions or specific types of compensation arrangements. Reliance on these exemptions is subject to certain conditions that the Department has found necessary to protect the interests of plans and IRAs.

In connection with the development of the Department's proposed definition of fiduciary under ERISA section 3(21)(A)(ii) and Code section 4975(e)(3)(B), the Department has considered public input indicating the need for additional prohibited transaction relief for the wide variety of compensation structures that exist today in the marketplace for investment transactions. After consideration of the issue, the Department determined to propose, elsewhere in this issue of the **Federal Register**, two new class exemptions as well as amendments to two other existing class exemptions. These new and amended class exemptions provide relief for a fiduciary's receipt of compensation or other benefit resulting from its provision of investment advice to plans and IRAs in the context of many different types of investment transactions.

While each of the proposed new and amended class exemptions sets forth conditions that are tailored to their respective transactions, each also conditions relief on a fiduciary's compliance with certain Impartial Conduct Standards. The Department has determined that the Impartial Conduct Standards comprise important baseline safeguards that should be required of fiduciaries relying on other existing exemptions providing relief for plan and IRA investment transactions. Accordingly, this notice proposes that the Impartial Conduct Standards be made conditions of the following

[8] Although the preamble adopts the phrase ''seller's carve-out'' as a shorthand way of referring to the carve-out and its terms, the regulatory carve-out is not limited to sellers but rather applies more broadly to counterparties in arm's length transactions with plan investors with financial expertise.

[9] The Code does not contain a parallel provision.

[10] *See* 29 CFR 2550.408b–2(e); 26 CFR 54.4975–6(a)(5).

existing exemptions: PTEs 75–1, Part III, 75–1, Part IV, 77–4, 80–83 and 83–1.

Under the amendments, fiduciaries would be required to act in accordance with the Impartial Conduct Standards in transactions governed by the exemptions. This will result in additional protections for all plans, but most particularly for IRA owners. That is because fiduciaries' dealings with IRAs are governed by the Code, not by ERISA,[11] and the Code, unlike ERISA, does not directly impose responsibilities of prudence and loyalty on fiduciaries. The amendments to the exemptions would condition relief under the exemptions on the satisfaction of these responsibilities. For purposes of these amendments, the term IRA means any trust, account or annuity described in Code section 4975(e)(1)(B) through (F), including, for example, an individual retirement account described in section 408(a) of the Code and a health savings account described in section 223(d) of the Code.[12] The impartial conduct standards will work across multiple class exemptions to ensure that these fiduciaries are held to a single set of standards and that these standards are applicable to both plans and IRAs. The proposed amendments, if granted, will apply prospectively to fiduciaries relying on the exemptions.

Description of the Proposal

The proposal would amend prohibited transaction exemptions 75–1, Part III, 75–1, Part IV, 77–4, 80–83 and 83–1. Specifically, these exemptions provide the following relief:

- PTE 75–1, Part III [13] permits a fiduciary to cause a plan or IRA to purchase securities from a member of an underwriting syndicate other than the fiduciary, when the fiduciary is also a member of the syndicate;
- PTE 75–1, Part IV [14] permits a plan or IRA to purchase securities in a principal transaction from a fiduciary that is a market maker with respect to such securities;
- PTE 77–4 [15] provides relief for a plan's or IRA's purchase or sale of open-end investment company shares where the investment adviser for the open-end investment company is also a fiduciary to the plan or IRA;
- PTE 80–83 [16] provides relief for a fiduciary causing a plan or IRA to purchase a security when the proceeds of the securities issuance may be used by the issuer to retire or reduce indebtedness to the fiduciary or an affiliate; and
- PTE 83–1 [17] provides relief for the sale of certificates in an initial issuance of certificates, by the sponsor of a mortgage pool to a plan or IRA, when the sponsor, trustee or insurer of the mortgage pool is a fiduciary with respect to the plan or IRA assets invested in such certificates.

This proposal sets forth an amendment to each of these exemptions. Each of the amendments is tailored to the structure and language of the applicable exemption. Therefore, the terminology and numbering varies from amendment to amendment. Despite such variation, each amendment would apply the same Impartial Conduct Standards uniformly across each exemption.

More specifically, the amendments would require a fiduciary that satisfies ERISA section 3(21)(A)(i) or (ii), or the corresponding provisions of Code section 4975(e)(3)(A) or (B), with respect to the assets involved in the investment transaction, to meet the Impartial Conduct Standards described in the applicable exemption. Under the proposed amendments' first conduct standard, the fiduciary must act in the best interest of the plan or IRA. Best interest is defined to mean acting with the care, skill, prudence, and diligence under the circumstances then prevailing that a prudent person would exercise based on the investment objectives, risk tolerance, financial circumstances, and the needs of the plan or IRA when providing investment advice to the plan or IRA or managing the plan's or IRA's assets. Further, under the best interest standard, the fiduciary must act without regard to the financial or other interests of the fiduciary or its affiliates or any other party. Under this standard, the fiduciary must put the interests of the plan or IRA ahead of its own financial interests or those of any affiliate or other party.

In this regard, the Department notes that while fiduciaries of plans covered by ERISA are subject to the ERISA section 404 standards of prudence and loyalty, the Code contains no provisions that hold IRA fiduciaries to those standards. However, as a condition of relief under the proposed amendments, both IRA and plan fiduciaries would have to agree to, and uphold, the best interest requirement. The best interest standard is defined to effectively mirror the ERISA section 404 duties of prudence and loyalty, as applied in the context of fiduciary investment advice. Failure to satisfy the best interest standard would render the exemption unavailable to the fiduciary with respect to compensation received in connection with the transaction.

The second conduct standard requires that all compensation received by the fiduciary and its affiliates in connection with the applicable transaction be reasonable in relation to the total services they provide to the plan or IRA. The third conduct standard requires that statements about recommended investments, fees, material conflicts of interest, and any other matters relevant to a plan's or IRA owner's investment decisions, not be misleading. The Department notes in this regard that a fiduciary's *failure* to disclose a material conflict of interest may be considered a misleading statement. Transactions that violate these requirements are not likely to be in the interests of plans, their participants and beneficiaries, or IRA owners, or protective of their rights.

Unlike the new exemption proposals published elsewhere in the **Federal Register**, these proposed amendments do not require fiduciaries to contractually warrant compliance with applicable federal and state laws. However, the Department notes that significant violations of applicable federal or state law could also amount to violations of the Impartial Conduct Standards, such as the best interest standard, in which case these exemptions, as amended, would be deemed unavailable for transactions occurring in connection with such violations.

[11] *See* ERISA section 404.

[12] The Department notes that PTE 2002–13 amended PTEs 80–83 and 83–1 so that the terms ''employee benefit plan'' and ''plan'' refer to an employee benefit plan described in ERISA section 3(3) and/or a plan described in section 4975(e)(1) of the Code. *See* 67 FR 9483 (March 1, 2002). At the same time, in the preamble to PTE 2002–13, the Department explained that it had determined, after consulting with the Internal Revenue Service, that plans described in 4975(e)(1) of the Code are included within the scope of relief provided by PTEs 75–1 and 77–4, because they were issued jointly by the Department and the Service. For simplicity and consistency with the other new proposed exemptions and proposed amendments to existing exemptions published elsewhere in this issue of the **Federal Register**, the Department has proposed this specific definition of IRA.

[13] Exemptions from Prohibitions Respecting Certain Classes of Transactions Involving Employee Benefit Plans and Certain Broker-Dealers, Reporting Dealers and Banks, 40 FR 50845 (Oct. 31, 1975), as amended at 71 FR 5883 (Feb. 3, 2006).

[14] Exemptions from Prohibitions Respecting Certain Classes of Transactions Involving Employee Benefit Plans and Certain Broker-Dealers, Reporting Dealers and Banks, 40 FR 50845 (Oct. 31, 1975), as amended at 71 FR 5883 (Feb. 3, 2006).

[15] Class Exemption for Certain Transactions Between Investment Companies and Employee Benefit Plans, 42 FR 18732 (Apr. 8, 1977).

[16] Class Exemption for Certain Transactions Involving Purchase of Securities Where Issuer May Use Proceeds to Reduce or Retire Indebtedness to Parties in Interest, 45 FR 73189 (Nov. 4, 1980), as amended at 67 FR 9483 (March 1, 2002).

[17] Class Exemption for Certain Transactions Involving Mortgage Pool Investment Trusts, 48 FR 895 (Jan. 7, 1983), as amended at 67 FR 9483 (March 1, 2002).

Applicability Date

The Department is proposing that compliance with the final regulation defining a fiduciary under ERISA section 3(21)(A)(ii) and Code section 4975(e)(3)(B) will begin eight months after publication of the final regulation in the **Federal Register** (Applicability Date). The Department proposes to make these amendments, if granted, applicable on the Applicability Date.

General Information

The attention of interested persons is directed to the following:

(1) The fact that a transaction is the subject of an exemption under ERISA section 408(a) and Code section 4975(c)(2) does not relieve a fiduciary or other party in interest or disqualified person with respect to a plan from certain other provisions of ERISA and the Code, including any prohibited transaction provisions to which the exemption does not apply and the general fiduciary responsibility provisions of ERISA section 404 which require, among other things, that a fiduciary discharge his or her duties respecting the plan solely in the interests of the plan's participants and beneficiaries and in a prudent fashion in accordance with ERISA section 404(a)(1)(B);

(2) Before an exemption may be granted under ERISA section 408(a) and Code section 4975(c)(2), the Department must find that the exemption is administratively feasible, in the interests of plans and their participants and beneficiaries and IRA owners, and protective of the rights of plans' participants and beneficiaries and IRA owners;

(3) If granted, an exemption will be applicable to a particular transactions only if the transactions satisfy the conditions specified in the amendments; and

(4) If granted, the amended exemptions will be supplemental to, and not in derogation of, any other provisions of ERISA and the Code, including statutory or administrative exemptions and transitional rules. Furthermore, the fact that a transaction is subject to an administrative or statutory exemption is not dispositive of whether the transaction is in fact a prohibited transaction.

Proposed Amendments to Class Exemptions

I. Prohibited Transaction Exemption 75–1, Part III

The Department proposes to amend Prohibited Transaction Exemption 75–1, Part III, under the authority of ERISA section 408(a) and Code section 4975(c)(2), and in accordance with the procedures set forth in 29 CFR part 2570, subpart B (76 FR 66637, October 27, 2011).

A. A new section III(f) is inserted to read as follows:

(f) *Standards of Impartial Conduct.* If the fiduciary is a fiduciary within the meaning of ERISA section 3(21)(A)(i) or (ii), or Code section 4975(e)(3)(A) or (B), with respect to the assets of a plan or IRA involved in the transaction, the fiduciary must comply with the following conditions with respect to the transaction:

(1) The fiduciary acts in the Best Interest of the plan or IRA.

(2) All compensation received by the fiduciary in connection with the transaction is reasonable in relation to the total services the fiduciary provides to the plan or IRA.

(3) The fiduciary's statements about recommended investments, fees, material conflicts of interest, and any other matters relevant to a plan's or IRA owner's investment decisions, are not misleading. A ''material conflict of interest'' exists when a fiduciary has a financial interest that could affect the exercise of its best judgment as a fiduciary in rendering advice to a plan or IRA owner. For this purpose, a fiduciary's failure to disclose a material conflict of interest relevant to the services the fiduciary is providing or other actions it is taking in relation to a plan's or IRA owner's investment decisions is deemed to be a misleading statement.

For purposes of this section, a fiduciary acts in the ''Best Interest'' of the plan or IRA when the fiduciary acts with the care, skill, prudence, and diligence under the circumstances then prevailing that a prudent person would exercise based on the investment objectives, risk tolerance, financial circumstances, and needs of the plan or IRA, without regard to the financial or other interests of the fiduciary or any other party. Also for the purposes of this section, the term IRA means any trust, account or annuity described in Code section 4975(e)(1)(B) through (F), including, for example, an individual retirement account described in section 408(a) of the Code and a health savings account described in section 223(d) of the Code.

B. Sections III(f) and III(g) are redesignated, respectively, as sections III(g) and III(h).

II. Prohibited Transaction Exemption 75–1, Part IV

The Department proposes to amend Prohibited Transaction Exemption 75–1, Part IV, under the authority of ERISA section 408(a) and Code section 4975(c)(2), and in accordance with the procedures set forth in 29 CFR part 2570, subpart B (76 FR 66637, October 27, 2011).

A. A new section IV(e) is inserted to read as follows:

(e) *Standards of Impartial Conduct.* If the fiduciary is a fiduciary within the meaning of ERISA section 3(21)(A)(i) or (ii), or Code section 4975(e)(3)(A), or (B), with respect to the assets of a plan or IRA involved in the transaction, the fiduciary must comply with the following conditions with respect to the transaction:

(1) The fiduciary acts in the Best Interest of the plan or IRA.

(2) All compensation received by the fiduciary in connection with the transaction is reasonable in relation to the total services the fiduciary provides to the plan or IRA.

(3) The fiduciary's statements about recommended investments, fees, material conflicts of interest, and any other matters relevant to a plan's or IRA owner's investment decisions, are not misleading. A ''material conflict of interest'' exists when a fiduciary has a financial interest that could affect the exercise of its best judgment as a fiduciary in rendering advice to a plan or IRA owner. For this purpose, a fiduciary's failure to disclose a material conflict of interest relevant to the services the fiduciary is providing or other actions it is taking in relation to a plan's or IRA owner's investment decisions is deemed to be a misleading statement.

For purposes of this section, a fiduciary acts in the ''Best Interest'' of the plan or IRA when the fiduciary acts with the care, skill, prudence, and diligence under the circumstances then prevailing that a prudent person would exercise based on the investment objectives, risk tolerance, financial circumstances, and needs of the plan or IRA, without regard to the financial or other interests of the fiduciary or any other party. Also for the purposes of this section, the term IRA means any trust, account or annuity described in Code section 4975(e)(1)(B) through (F), including, for example, an individual retirement account described in section 408(a) of the Code and a health savings account described in section 223(d) of the Code.

B. Sections IV(e) and IV(f) are redesignated, respectively, as sections IV(f) and IV(g).

III. Prohibited Transaction Exemption 77–4

The Department proposes to amend Prohibited Transaction Exemption 77–4 under the authority of ERISA section 408(a) and Code section 4975(c)(2), and in accordance with the procedures set forth in 29 CFR part 2570, subpart B (76 FR 66637, October 27, 2011).

A new section II(g) is inserted to read as follows:

(g) *Standards of Impartial Conduct.* If the fiduciary is a fiduciary within the meaning of ERISA section 3(21)(A)(i) or (ii), or Code section 4975(e)(3)(A), or (B), with respect to the assets of a plan or IRA involved in the transaction, the fiduciary must comply with the following conditions with respect to the transaction:

(1) The fiduciary acts in the Best Interest of the plan or IRA.

(2) All compensation received by the fiduciary and its affiliates in connection with the transaction is reasonable in relation to the total services the fiduciary provides to the plan or IRA.

(3) The fiduciary's statements about recommended investments, fees, material conflicts of interest, and any other matters relevant to a plan's or IRA owner's investment decisions, are not misleading. A ''material conflict of interest'' exists when a fiduciary has a financial interest that could affect the exercise of its best judgment as a fiduciary in rendering advice to a plan or IRA owner. For this purpose, a fiduciary's failure to disclose a material conflict of interest relevant to the services the fiduciary is providing or other actions it is taking in relation to a plan's or IRA owner's investment decisions is deemed to be a misleading statement.

For purposes of this section, a fiduciary acts in the ''Best Interest'' of the plan or IRA when the fiduciary acts with the care, skill, prudence, and diligence under the circumstances then prevailing that a prudent person would exercise based on the investment objectives, risk tolerance, financial circumstances, and needs of the plan or IRA, without regard to the financial or other interests of the fiduciary, any affiliate or other party. Also for the purposes of this section, the term IRA means any trust, account or annuity described in Code section 4975(e)(1)(B) through (F), including, for example, an individual retirement account described in section 408(a) of the Code and a health savings account described in section 223(d) of the Code.

IV. Prohibited Transaction Exemption 80–83

The Department proposes to amend Prohibited Transaction Exemption 80–83 under the authority of ERISA section 408(a) and Code section 4975(c)(2), and in accordance with the procedures set forth in 29 CFR part 2570, subpart B (76 FR 66637, October 27, 2011).

A. A new section II(A)(2) is inserted to read as follows:

(2) *Standards of Impartial Conduct.* If the fiduciary is a fiduciary within the meaning of ERISA section 3(21)(A)(i) or (ii), or Code section 4975(e)(3)(A), or (B), with respect to the assets of a plan or IRA involved in the transaction, the fiduciary must comply with the following conditions with respect to the transaction:

(a) The fiduciary acts in the Best Interest of the plan or IRA.

(b) All compensation received by the fiduciary and its affiliates in connection with the transaction is reasonable in relation to the total services the fiduciary provides to the plan or IRA.

(c) The fiduciary's statements about recommended investments, fees, material conflicts of interest, and any other matters relevant to a plan's or IRA owner's investment decisions, are not misleading. A ''material conflict of interest'' exists when a fiduciary has a financial interest that could affect the exercise of its best judgment as a fiduciary in rendering advice to a plan or IRA owner. For this purpose, a fiduciary's failure to disclose a material conflict of interest relevant to the services the fiduciary is providing or other actions it is taking in relation to a plan's or IRA owner's investment decisions is deemed to be a misleading statement.

For purposes of this section, a fiduciary acts in the ''Best Interest'' of the employee benefit plan or IRA when the fiduciary acts with the care, skill, prudence, and diligence under the circumstances then prevailing that a prudent person would exercise based on the investment objectives, risk tolerance, financial circumstances, and needs of the employee benefit plan or IRA, without regard to the financial or other interests of the fiduciary, any affiliate or other party. Also for the purposes of this section, the term IRA means any trust, account or annuity described in Code section 4975(e)(1)(B) through (F), including, for example, an individual retirement account described in section 408(a) of the Code and a health savings account described in section 223(d) of the Code.

B. Section II(A)(2) is redesignated as section II(A)(3).

V. Prohibited Transaction Exemption 83–1

The Department proposes to amend Prohibited Transaction Exemption 83–1 under the authority of ERISA section 408(a) and Code section 4975(c)(2), and in accordance with the procedures set forth in 29 CFR part 2570, subpart B (76 FR 66637, October 27, 2011).

A. A new section II(B) is inserted to read as follows:

(B) *Standards of Impartial Conduct.* Solely with respect to the relief provided under section I(B), if the sponsor, trustee or insurer of such pool who is a fiduciary is a fiduciary within the meaning of ERISA section 3(21)(A)(i) or (ii), or Code section 4975(e)(3)(A), or (B), with respect to the assets of a plan or IRA involved in the transaction, the fiduciary must comply with the following conditions with respect to the transaction:

(1) The fiduciary acts in the Best Interest of the plan or IRA.

(2) All compensation received by the fiduciary and its affiliates in connection with the transaction is reasonable in relation to the total services the fiduciary and its affiliates provide to the plan or IRA.

(3) The fiduciary's statements about recommended investments, fees, material conflicts of interest, and any other matters relevant to a plan's or IRA owner's investment decisions, are not misleading. A ''material conflict of interest'' exists when a fiduciary has a financial interest that could affect the exercise of its best judgment as a fiduciary in rendering advice to a plan or IRA owner. For this purpose, a fiduciary's failure to disclose a material conflict of interest relevant to the services the fiduciary is providing or other actions it is taking in relation to a plan's or IRA owner's investment decisions is deemed to be a misleading statement.

For purposes of this section, a fiduciary acts in the ''Best Interest'' of the plan or IRA when the fiduciary acts with the care, skill, prudence, and diligence under the circumstances then prevailing that a prudent person would exercise based on the investment objectives, risk tolerance, financial circumstances, and needs of the plan or IRA, without regard to the financial or other interests of the plan or IRA to the financial interests of the fiduciary, any affiliate or other party. Also for the purposes of this section, the term IRA means any trust, account or annuity described in Code section 4975(e)(1)(B) through (F), including, for example, an individual retirement account described in section 408(a) of the Code and a health savings account described in section 223(d) of the Code.

Signed at Washington, DC, this 14th day of April, 2015.

Phyllis C. Borzi,

Assistant Secretary, Employee Benefits Security Administration, Department of Labor.

[FR Doc. 2015–08839 Filed 4–15–15; 11:15 am]

BILLING CODE 4510–29–P

FEDERAL REGISTER

Vol. 80 Monday,

No. 75 April 20, 2015

Part IV

Department of Health and Human Services

Centers for Medicare & Medicaid Services

42 CFR Part 483

Medicare Program; Prospective Payment System and Consolidated Billing for Skilled Nursing Facilities (SNFs) for FY 2016, SNF Value-Based Purchasing Program, SNF Quality Reporting Program, and Staffing Data Collection; Proposed Rule

DEPARTMENT OF HEALTH AND HUMAN SERVICES

Centers for Medicare & Medicaid Services

42 CFR Part 483

[CMS–1622–P]

RIN 0938–AS44

Medicare Program; Prospective Payment System and Consolidated Billing for Skilled Nursing Facilities (SNFs) for FY 2016, SNF Value-Based Purchasing Program, SNF Quality Reporting Program, and Staffing Data Collection

AGENCY: Centers for Medicare & Medicaid Services (CMS), HHS.

ACTION: Proposed rule.

SUMMARY: This proposed rule would update the payment rates used under the prospective payment system (PPS) for skilled nursing facilities (SNFs) for fiscal year (FY) 2016. In addition, it includes a proposal to specify a SNF all-cause all-condition hospital readmission measure, as well as a proposal to adopt that measure for a new SNF Value-Based Purchasing (VBP) Program and a discussion of SNF VBP Program policies we are considering for future rulemaking to promote higher quality and more efficient health care for Medicare beneficiaries. Additionally, this proposed rule proposes to implement a new quality reporting program for SNFs as specified in the Improving Medicare Post-Acute Care Transformation Act of 2014 (IMPACT Act). It also would amend the requirements that a long-term care (LTC) facility must meet to qualify to participate as a skilled nursing facility (SNF) in the Medicare program, or a nursing facility (NF) in the Medicaid program. These requirements implement the provision in the Affordable Care Act regarding the submission of staffing information based on payroll data.

DATES: To be assured consideration, comments must be received at one of the addresses provided below, no later than 5 p.m. on June 19, 2015.

ADDRESSES: In commenting, please refer to file code CMS–1622–P. Because of staff and resource limitations, we cannot accept comments by facsimile (FAX) transmission.

You may submit comments in one of four ways (please choose only one of the ways listed):

1. *Electronically.* You may submit electronic comments on this regulation to *http://www.regulations.gov.* Within the search bar, enter the Regulation Identifier Number associated with this regulation, 0938–AS44, and then click on the ''Comment Now'' box

2. *By regular mail.* You may mail written comments to the following address ONLY: Centers for Medicare & Medicaid Services, Department of Health and Human Services, Attention: CMS–1622–P, P.O. Box 8016, Baltimore, MD 21244–8016.

Please allow sufficient time for mailed comments to be received before the close of the comment period.

3. *By express or overnight mail.* You may send written comments to the following address ONLY: Centers for Medicare & Medicaid Services, Department of Health and Human Services, Attention: CMS–1622–P, Mail Stop C4–26–05, 7500 Security Boulevard, Baltimore, MD 21244–1850.

4. *By hand or courier.* If you prefer, you may deliver (by hand or courier) your written comments before the close of the comment period to either of the following addresses:

a. Centers for Medicare & Medicaid Services, Department of Health and Human Services, Room 445–G, Hubert H. Humphrey Building, 200 Independence Avenue SW., Washington, DC 20201.

(Because access to the interior of the Hubert H. Humphrey Building is not readily available to persons without Federal Government identification, commenters are encouraged to leave their comments in the CMS drop slots located in the main lobby of the building. A stamp-in clock is available for persons wishing to retain a proof of filing by stamping in and retaining an extra copy of the comments being filed.)

b. Centers for Medicare & Medicaid Services, Department of Health and Human Services, 7500 Security Boulevard, Baltimore, MD 21244–1850.

If you intend to deliver your comments to the Baltimore address, please call telephone number (410) 786–7195 in advance to schedule your arrival with one of our staff members.

Comments mailed to the addresses indicated as appropriate for hand or courier delivery may be delayed and received after the comment period.

For information on viewing public comments, see the beginning of the **SUPPLEMENTARY INFORMATION** section.

FOR FURTHER INFORMATION CONTACT:

Penny Gershman, (410) 786–6643, for information related to SNF PPS clinical issues (excluding any issues raised in Section V of this proposed rule).

John Kane, (410) 786–0557, for information related to the development of the payment rates and case-mix indexes.

Kia Sidbury, (410) 786–7816, for information related to the wage index.

Bill Ullman, (410) 786–5667, for information related to level of care determinations, consolidated billing, and general information.

Shannon Kerr, (410) 786–0666, for information related to skilled nursing facility value-based purchasing.

Camillus Ezeike, (410) 786–8614, for information related to skilled nursing facility quality reporting.

Lorelei Chapman, (410) 786–9254, for information related to staffing data collection.

SUPPLEMENTARY INFORMATION:

Inspection of Public Comments: All comments received before the close of the comment period are available for viewing by the public, including any personally identifiable or confidential business information that is included in a comment. We post all comments received before the close of the comment period on the following Web site as soon as possible after they have been received: *http://www.regulations.gov.* Follow the search instructions on that Web site to view public comments.

Comments received timely will also be available for public inspection as they are received, generally beginning approximately 3 weeks after publication of a document, at the headquarters of the Centers for Medicare & Medicaid Services, 7500 Security Boulevard, Baltimore, Maryland 21244, Monday through Friday of each week from 8:30 a.m. to 4 p.m. To schedule an appointment to view public comments, phone 1–800–743–3951.

Availability of Certain Tables Exclusively Through the Internet on the CMS Web Site

As discussed in the FY 2015 SNF PPS final rule (79 FR 45628), tables setting forth the Wage Index for Urban Areas Based on CBSA Labor Market Areas and the Wage Index Based on CBSA Labor Market Areas for Rural Areas are no longer published in the **Federal Register**. Instead, these tables are available exclusively through the Internet on the CMS Web site. The wage index tables for this proposed rule can be accessed on the SNF PPS Wage Index home page, at *http://www.cms.gov/Medicare/Medicare-Fee-for-Service-Payment/SNFPPS/WageIndex.html.*

Readers who experience any problems accessing any of these online SNF PPS wage index tables should contact Kia Sidbury at (410) 786–7816.

To assist readers in referencing sections contained in this document, we are providing the following Table of Contents.

Table of Contents

I. Executive Summary
A. Purpose
B. Summary of Major Provisions
C. Summary of Cost and Benefits
II. Background on SNF PPS
A. Statutory Basis and Scope
B. Initial Transition for the SNF PPS
C. Required Annual Rate Updates
III. SNF PPS Rate Setting Methodology and FY 2016 Update
A. Federal Base Rates
B. SNF Market Basket Update
1. SNF Market Basket Index
2. Use of the SNF Market Basket Percentage
3. Forecast Error Adjustment
4. Multifactor Productivity Adjustment
a. Incorporating the Multifactor Productivity Adjustment Into the Market Basket Update
5. Market Basket Update Factor for FY 2016
C. Case-Mix Adjustment
D. Wage Index Adjustment
E. Adjusted Rate Computation Example
IV. Additional Aspects of the SNF PPS
A. SNF Level of Care—Administrative Presumption
B. Consolidated Billing
C. Payment for SNF-Level Swing-Bed Services
V. Other Issues
A. Skilled Nursing Facility Value-Based Purchasing Program (SNF VBP)
1. Background
a. Overview
b. SNF VBP Report to Congress
2. Statutory Basis for the SNF VBP Program
3. Skilled Nursing Facility 30-Day All-Cause Readmission Measure (SNFRM)
a. Overview
b. Measure Calculation
c. Exclusions
d. Eligible Readmissions
e. Risk Adjustment
f. Measurement Period
g. Stakeholder/MAP Input
h. Feedback Reports to SNFs
4. Performance Standards
a. Background
i. Hospital Value Based Purchasing Program
ii. Hospital-Acquired Conditions Reduction Program
iii. Hospital Readmissions Reduction Program (HRRP)
iv. End-Stage Renal Disease Quality Incentive Program (ESRD QIP)
b. Measuring Improvement
i. Improvement Points
ii. Measure Rate Increases
iii. Ranking Increases
iv. Performance Score Increases
5. FY 2019 Performance Period and Baseline Period Considerations
a. Performance Period
b. Baseline Period
6. SNF Performance Scoring
a. Considerations
i. Hospital Value-Based Purchasing
ii. Hospital-Acquired Conditions Reduction Program
iii. Other Considerations
b. Notification Procedures
c. Exchange Function
7. SNF Value-Based Incentive Payments
8. SNF VBP Public Reporting
a. SNF-specific Performance Information
b. Aggregate Performance Information
B. Advancing Health Information Exchange
C. Skilled Nursing Facility (SNF) Quality Reporting Program (QRP)
1. Background and Statutory Authority
2. General Considerations Used for Selection of Quality Measures for the SNF QRP
3. Policy for Retaining SNF QRP Measures for Future Payment Determinations
4. Proposed Process for Adoption of Changes to SNF QRP Program Measures
5. Proposed New Quality Measures for FY 2018 and Subsequent Payment Determinations
a. Quality Measure Addressing the Domain of Skin Integrity and Changes in Skin Integrity
b. Quality Measure Addressing the Domain of the Incidence of Major Falls
c. Quality Measure Addressing the Domain of Functional Status, Cognitive Function, and Changes in Function and Cognitive Function
6. SNF QRP Quality Measures and Under Consideration for Future Years
7. Form, Manner, and Timing of Quality Data Submission
a. Participation/Timing for New SNFs
b. Data Collection Timelines and Requirements for FY 2018 Payment Determination and Subsequent Years
8. SNF QRP Data Completion Thresholds for FY 2018 Payment Determination and Subsequent Years
9. SNF QRP Data Validation Requirements for the FY 2018 Payment Determination and Subsequent Years
10. SNF QRP Submission Exception and Extension Requirements for the FY 2018 Payment Determination and Subsequent Years
11. SNF QRP Reconsideration and Appeals Procedures for the FY 2018 Payment Determination and Subsequent Years
12. Public Display of Quality Measure Data for the SNF QRP
13. Mechanism for Providing Feedback Reports to SNFs
D. Staffing Data Collection
1. Background and Statutory Authority
2. Consultation on Specifications
3. Provisions of the Proposed Rule
a. Submission Requirements
b. Distinguishing Employee From Agency and Contract Staff
c. Data Format
d. Submission Schedule
4. Compliance and Enforcement
5. Conclusion
VI. Collection of Information Requirements
VII. Response to Comments
VIII. Economic Analyses
Regulation Text

Acronyms

In addition, because of the many terms to which we refer by acronym in this proposed rule, we are listing these abbreviations and their corresponding terms in alphabetical order below:

AIDS Acquired Immune Deficiency Syndrome
ARD Assessment reference date
BBA Balanced Budget Act of 1997, Pub. L. 105–33
BBRA Medicare, Medicaid, and SCHIP Balanced Budget Refinement Act of 1999, Pub. L. 106–113
BIPA Medicare, Medicaid, and SCHIP Benefits Improvement and Protection Act of 2000, Pub. L. 106–554
CAH Critical access hospital
CASPER Certification and Survey Provider Enhanced Reports
CBSA Core-based statistical area
CCN CMS Certification Number
CFR Code of Federal Regulations
CMI Case-mix index
CMS Centers for Medicare & Medicaid Services
COT Change of therapy
ECI Employment Cost Index
EHR Electronic health record
EOT End of therapy
EOT–R End of therapy—resumption
ESRD–QIP End-Stage Renal Disease Quality Incentive Program
FAQ Frequently Asked Questions
FFS Fee-for-service
FR Federal Register
FY Fiscal year
GAO Government Accountability Office
HAC Hospital-Acquired Conditions
HACRP Hospital-Acquired Condition Reduction Program
HCPCS Healthcare Common Procedure Coding System
HIQR Hospital Inpatient Quality Reporting
HOQR Hospital Outpatient Quality Reporting
HRRP Hospital Readmissions Reduction Program
HVBP Hospital Value-Based Purchasing
ICR Information Collection Requirements
IGI IHS (Information Handling Services) Global Insight, Inc.
IMPACT Improving Medicare Post-Acute Care Transformation Act of 2014
IPPS Inpatient prospective payment system
IRF Inpatient Rehabilitation Facility
LTC Long-term care
LTCH Long-term care hospital
MAP Measures Application Partnership
MDS Minimum data set
MFP Multifactor productivity
MMA Medicare Prescription Drug, Improvement, and Modernization Act of 2003, Pub. L. 108–173
MSA Metropolitan statistical area
NAICS North American Industrial Classification System
NF Nursing facility
NH Nursing Homes
NQF National Quality Forum
OMB Office of Management and Budget
OMRA Other Medicare Required Assessment
PAC Post-acute care
PAMA Protecting Access to Medicare Act of 2014, Pub. L 113–93
PPS Prospective Payment System
PQRS Physician Quality Reporting System
QIES Quality Improvement Evaluation System
QIES ASAP Quality Improvement and Evaluation System Assessment Submission and Processing
QRP Quality Reporting Program

RAI Resident assessment instrument
RAVEN Resident assessment validation entry
RFA Regulatory Flexibility Act, Pub. L. 96–354
RIA Regulatory impact analysis
RUG–III Resource Utilization Groups, Version 3
RUG–IV Resource Utilization Groups, Version 4
RUG–53 Refined 53-Group RUG–III Case-Mix Classification System
SCHIP State Children's Health Insurance Program
sDTI Suspected deep tissue injuries
SNF Skilled nursing facility
SNFRM Skilled Nursing Facility 30-Day All-Cause Readmission Measure
STM Staff time measurement
STRIVE Staff time and resource intensity verification
TEP Technical expert panel
UMRA Unfunded Mandates Reform Act, Pub. L. 104–4
VBP Value-based purchasing

I. Executive Summary

A. Purpose

This proposed rule would update the SNF prospective payment rates for FY 2016 as required under section 1888(e)(4)(E) of the Social Security Act (the Act). It would also respond to section 1888(e)(4)(H) of the Act, which requires the Secretary to provide for publication in the **Federal Register** before the August 1 that precedes the start of each fiscal year, certain specified information relating to the payment update (see section II.C.). In addition, it proposes to implement a new quality reporting program for SNFs under section 1888(e)(6) of the Act. Furthermore, this proposed rule would establish new regulatory reporting requirements for SNFs and NFs to implement the statutory obligation to submit staffing information based on payroll data under section 1128I(g) of the Act, specify a SNF all-cause all-condition hospital readmission measure under section 1888(g)(1) of the Act and adopt that measure for a new SNF value-based purchasing (VBP) program under section 1888(h) of the Act. The proposed rule also seeks comment on other policies under consideration for a SNF VBP Program, under which value-based incentive payments will be made in a fiscal year to SNFs beginning with payment for services furnished on or after October 1, 2018.

B. Summary of Major Provisions

In accordance with sections 1888(e)(4)(E)(ii)(IV) and 1888(e)(5) of the Act, the federal rates in this proposed rule would reflect an update to the rates that we published in the SNF PPS final rule for FY 2015 (79 FR 45628) which reflects the SNF market basket index, as adjusted by the applicable forecast error correction and by the multifactor productivity adjustment for FY 2016. We also propose to specify a SNF all-cause all-condition hospital readmission measure under section 1888(g) of the Act, as well as adopt that measure for a new SNF Value-Based Purchasing (VBP) Program under section 1888(h) of the Act. We also seek comment on other policies for the SNF VBP Program that we are considering for adoption in future rulemaking to promote higher quality and more efficient health care for Medicare beneficiaries. We are also proposing to implement a new quality reporting program for SNFs under section 1888(e)(6) of the Act, which was added by section 2(c)(4) of the IMPACT Act of 2014 (Pub. L. 113–85).

For payment determinations beginning with FY 2018, we propose to adopt measures meeting three quality domains specified in section 1899B(c)(1) of the Act: Functional status, skin integrity, and incidence of major falls.

In addition, we propose adding new language at 42 CFR part 483 to implement section 1128I(g) of the Act. Specifically, we propose that, beginning on July 1, 2016, LTC facilities that participate in Medicare or Medicaid will be required to electronically submit direct care staffing information (including information for agency and contract staff) based on payroll and other verifiable and auditable data in a uniform format. We invite public comment on CMS' proposed changes to 42 CFR part 483 to ensure compliance with this requirement.

C. Summary of Cost and Benefits

Provision description	Total transfers
Proposed FY 2016 SNF PPS payment rate update.	The overall economic impact of this proposed rule would be an estimated increase of $500 million in aggregate payments to SNFs during FY 2016.

II. Background on SNF PPS

A. Statutory Basis and Scope

As amended by section 4432 of the Balanced Budget Act of 1997 (BBA, Pub. L. 105–33, enacted on August 5, 1997), section 1888(e) of the Act provides for the implementation of a PPS for SNFs. This methodology uses prospective, case-mix adjusted per diem payment rates applicable to all covered SNF services defined in section 1888(e)(2)(A) of the Act. The SNF PPS is effective for cost reporting periods beginning on or after July 1, 1998, and covers all costs of furnishing covered SNF services (routine, ancillary, and capital-related costs) other than costs associated with approved educational activities and bad debts. Under section 1888(e)(2)(A)(i) of the Act, covered SNF services include post-hospital extended care services for which benefits are provided under Part A, as well as those items and services (other than a small number of excluded services, such as physician services) for which payment may otherwise be made under Part B and which are furnished to Medicare beneficiaries who are residents in a SNF during a covered Part A stay. A comprehensive discussion of these provisions appears in the May 12, 1998 interim final rule (63 FR 26252). In addition, a detailed discussion of the legislative history of the SNF PPS is available online at *http://www.cms.gov/Medicare/Medicare-Fee-for-Service-Payment/SNFPPS/Downloads/Legislative_History_07302013.pdf.*

Section 215(a) of PAMA added section 1888(g) to the Act requiring the Secretary to specify certain quality measures for the skilled nursing facility setting. Additionally, section 215(b) of PAMA added section 1888(h) to the Act requiring the Secretary to implement a value-based purchasing program for skilled nursing facilities. Finally, section 2(a) of the IMPACT Act added section 1899B to the Act that, among other things, requires SNFs to report standardized data for measures in specified quality and resource use domains. In addition, the IMPACT Act added section 1888(e)(6) to the Act, which requires the Secretary to implement a quality reporting program for SNFs, which includes a requirement that SNFs report certain data to receive their full payment under the SNF PPS.

B. Initial Transition for the SNF PPS

Under sections 1888(e)(1)(A) and 1888(e)(11) of the Act, the SNF PPS included an initial, three-phase transition that blended a facility-specific rate (reflecting the individual facility's historical cost experience) with the federal case-mix adjusted rate. The

transition extended through the facility's first three cost reporting periods under the PPS, up to and including the one that began in FY 2001. Thus, the SNF PPS is no longer operating under the transition, as all facilities have been paid at the full federal rate effective with cost reporting periods beginning in FY 2002. As we now base payments for SNFs entirely on the adjusted federal per diem rates, we no longer include adjustment factors under the transition related to facility-specific rates for the upcoming FY.

C. Required Annual Rate Updates

Section 1888(e)(4)(E) of the Act requires the SNF PPS payment rates to be updated annually. The most recent annual update occurred in a final rule that set forth updates to the SNF PPS payment rates for FY 2015 (79 FR 45628, August 5, 2014).

Section 1888(e)(4)(H) of the Act specifies that we provide for publication annually in the **Federal Register** of the following:

- The unadjusted federal per diem rates to be applied to days of covered SNF services furnished during the upcoming FY.
- The case-mix classification system to be applied for these services during the upcoming FY.
- The factors to be applied in making the area wage adjustment for these services.

Along with other revisions discussed later in this preamble, this proposed rule would provide the required annual updates to the per diem payment rates for SNFs for FY 2016.

III. SNF PPS Rate Setting Methodology and FY 2016 Update

A. Federal Base Rates

Under section 1888(e)(4) of the Act, the SNF PPS uses per diem federal payment rates based on mean SNF costs in a base year (FY 1995) updated for inflation to the first effective period of the PPS. We developed the federal payment rates using allowable costs from hospital-based and freestanding SNF cost reports for reporting periods beginning in FY 1995. The data used in developing the federal rates also incorporated a Part B add-on, which is an estimate of the amounts that, prior to the SNF PPS, would have been payable under Part B for covered SNF services furnished to individuals during the course of a covered Part A stay in a SNF.

In developing the rates for the initial period, we updated costs to the first effective year of the PPS (the 15-month period beginning July 1, 1998) using a SNF market basket index, and then standardized for geographic variations in wages and for the costs of facility differences in case mix. In compiling the database used to compute the federal payment rates, we excluded those providers that received new provider exemptions from the routine cost limits, as well as costs related to payments for exceptions to the routine cost limits. Using the formula that the BBA prescribed, we set the federal rates at a level equal to the weighted mean of freestanding costs plus 50 percent of the difference between the freestanding mean and weighted mean of all SNF costs (hospital-based and freestanding) combined. We computed and applied separately the payment rates for facilities located in urban and rural areas, and adjusted the portion of the federal rate attributable to wage-related costs by a wage index to reflect geographic variations in wages.

B. SNF Market Basket Update

1. SNF Market Basket Index

Section 1888(e)(5)(A) of the Act requires us to establish a SNF market basket index that reflects changes over time in the prices of an appropriate mix of goods and services included in covered SNF services. Accordingly, we have developed a SNF market basket index that encompasses the most commonly used cost categories for SNF routine services, ancillary services, and capital-related expenses. We use the SNF market basket index, adjusted in the manner described below, to update the federal rates on an annual basis. In the SNF PPS final rule for FY 2014 (78 FR 47939 through 47946), we revised and rebased the market basket, which included updating the base year from FY 2004 to FY 2010.

For the FY 2016 proposed rule, the FY 2010-based SNF market basket growth rate is estimated to be 2.6 percent, which is based on the IHS Global Insight, Inc. (IGI) first quarter 2015 forecast with historical data through fourth quarter 2014. In section III.B.5. of this proposed rule, we discuss the specific application of this adjustment to the forthcoming annual update of the SNF PPS payment rates.

2. Use of the SNF Market Basket Percentage

Section 1888(e)(5)(B) of the Act defines the SNF market basket percentage as the percentage change in the SNF market basket index from the midpoint of the previous FY to the midpoint of the current FY. For the federal rates set forth in this proposed rule, we use the percentage change in the SNF market basket index to compute the update factor for FY 2016. This is based on the IGI first quarter 2015 forecast (with historical data through the fourth quarter 2014) of the FY 2016 percentage increase in the FY 2010-based SNF market basket index for routine, ancillary, and capital-related expenses, which is used to compute the update factor in this proposed rule. As discussed in sections III.B.3. and III.B.4. of this proposed rule, this market basket percentage change would be reduced by the applicable forecast error correction (as described in § 413.337(d)(2)) and by the multifactor productivity adjustment as required by section 1888(e)(5)(B)(ii) of the Act. Finally, as discussed in section II.B. of this proposed rule, we no longer compute update factors to adjust a facility-specific portion of the SNF PPS rates, because the initial three-phase transition period from facility-specific to full federal rates that started with cost reporting periods beginning in July 1998 has expired.

3. Forecast Error Adjustment

As discussed in the June 10, 2003 supplemental proposed rule (68 FR 34768) and finalized in the August 4, 2003, final rule (68 FR 46057 through 46059), the regulations at § 413.337(d)(2) provide for an adjustment to account for market basket forecast error. The initial adjustment for market basket forecast error applied to the update of the FY 2003 rate for FY 2004, and took into account the cumulative forecast error for the period from FY 2000 through FY 2002, resulting in an increase of 3.26 percent to the FY 2004 update. Subsequent adjustments in succeeding FYs take into account the forecast error from the most recently available FY for which there is final data, and apply the difference between the forecasted and actual change in the market basket when the difference exceeds a specified threshold. We originally used a 0.25 percentage point threshold for this purpose; however, for the reasons specified in the FY 2008 SNF PPS final rule (72 FR 43425, August 3, 2007), we adopted a 0.5 percentage point threshold effective for FY 2008 and subsequent fiscal years. As we stated in the final rule for FY 2004 that first issued the market basket forecast error adjustment (68 FR 46058, August 4, 2003), the adjustment will reflect both upward and downward adjustments, as appropriate.

For FY 2014 (the most recently available FY for which there is final data), the estimated increase in the market basket index was 2.3 percentage points, while the actual increase for FY 2014 was 1.7 percentage points, resulting in the actual increase being 0.6

percentage point lower than the estimated increase. Accordingly, as the difference between the estimated and actual amount of change in the market basket index exceeds the 0.5 percentage point threshold and because the estimated amount of change exceeded the actual amount of change, the FY 2016 market basket percentage change of 2.6 percent would be adjusted downward by the forecast error correction of 0.6 percentage point, resulting in a SNF market basket increase of 2.0 percent, before application of the productivity adjustment discussed in this section. Table 1 shows the forecasted and actual market basket amounts for FY 2014.

TABLE 1—DIFFERENCE BETWEEN THE FORECASTED AND ACTUAL MARKET BASKET INCREASES FOR FY 2014

Index	Forecasted FY 2014 increase *	Actual FY 2014 increase **	FY 2014 difference
SNF	2.3	1.7	−0.6

* Published in **Federal Register**; based on second quarter 2013 IGI forecast (2010-based index).

** Based on the first quarter 2015 IGI forecast, with historical data through the fourth quarter 2014 (2010-based index).

4. Multifactor Productivity Adjustment

Section 3401(b) of the Affordable Care Act requires that, in FY 2012 (and in subsequent FYs), the market basket percentage under the SNF payment system as described in section 1888(e)(5)(B)(i) of the Act is to be reduced annually by the productivity adjustment described in section 1886(b)(3)(B)(xi)(II) of the Act. Section 1886(b)(3)(B)(xi)(II) of the Act, added by section 3401(a) of the Affordable Care Act, sets forth the definition of this productivity adjustment. The statute defines the productivity adjustment to be equal to the 10-year moving average of changes in annual economy-wide private nonfarm business multi-factor productivity (as projected by the Secretary for the 10-year period ending with the applicable fiscal year, year, cost-reporting period, or other annual period) (the MFP adjustment). The Bureau of Labor Statistics (BLS) is the agency that publishes the official measure of private nonfarm business multifactor productivity (MFP). We refer readers to the BLS Web site at *http://www.bls.gov/mfp* for the BLS historical published MFP data.

MFP is derived by subtracting the contribution of labor and capital inputs growth from output growth. The projections of the components of MFP are currently produced by IGI, a nationally recognized economic forecasting firm with which CMS contracts to forecast the components of the market baskets and MFP. To generate a forecast of MFP, IGI replicates the MFP measure calculated by the BLS, using a series of proxy variables derived from IGI's U.S. macroeconomic models. In section III.F.3. of the FY 2012 SNF PPS final rule (76 FR 48527 through 48529), we identified each of the major MFP component series employed by the BLS to measure MFP as well as provided the corresponding concepts determined to be the best available proxies for the BLS series.

Beginning with the FY 2016 rulemaking cycle, the MFP adjustment is calculated using a revised series developed by IGI to proxy the aggregate capital inputs. Specifically, IGI has replaced the Real Effective Capital Stock used for Full Employment GDP with a forecast of BLS aggregate capital inputs recently developed by IGI using a regression model. This series provides a better fit to the BLS capital inputs as measured by the differences between the actual BLS capital input growth rates and the estimated model growth rates over the historical time period. Therefore, we are using IGI's most recent forecast of the BLS capital inputs series in the MFP calculations beginning with the FY 2016 rulemaking cycle. A complete description of the MFP projection methodology is available on our Web site at *http://www.cms.gov/Research-Statistics-Data-and-Systems/Statistics-Trends-and-Reports/MedicareProgramRatesStats/MarketBasketResearch.html.* Although we discuss the IGI changes to the MFP proxy series in this proposed rule, in the future, when IGI makes changes to the MFP methodology, we will announce them on our Web site rather than in the annual rulemaking.

a. Incorporating the Multifactor Productivity Adjustment Into the Market Basket Update

According to section 1888(e)(5)(A) of the Act, the Secretary shall establish a skilled nursing facility market basket index that reflects changes over time in the prices of an appropriate mix of goods and services included in covered skilled nursing facility services. Section 1888(e)(5)(B)(ii) of the Act, added by section 3401(b) of the Affordable Care Act, requires that for FY 2012 and each subsequent FY, after determining the market basket percentage described in section 1888(e)(5)(B)(i) of the Act, the Secretary shall reduce such percentage by the productivity adjustment described in section 1886(b)(3)(B)(xi)(II) (which we refer to as the MFP adjustment). Section 1888(e)(5)(B)(ii) of the Act further states that the reduction of the market basket percentage by the MFP adjustment may result in the market basket percentage being less than zero for a FY, and may result in payment rates under section 1888(e) of the Act for a FY being less than such payment rates for the preceding FY. Thus, if the application of the MFP adjustment to the market basket percentage calculated under section 1888(e)(5)(B)(i) of the Act results in an MFP-adjusted market basket percentage that is less than zero, then the annual update to the unadjusted federal per diem rates under section 1888(e)(4)(E)(ii) of the Act would be negative, and such rates would decrease relative to the prior FY.

For the FY 2016 update, the MFP adjustment is calculated as the 10-year moving average of changes in MFP for the period ending September 30, 2016, which is 0.6 percent. Consistent with section 1888(e)(5)(B)(i) of the Act and § 413.337(d)(2) of the regulations, the market basket percentage for FY 2016 for the SNF PPS is based on IGI's first quarter 2015 forecast of the SNF market basket update (2.6 percent) as adjusted by the forecast error adjustment (0.6 percentage point), and is estimated to be 2.0 percent. In accordance with section 1888(e)(5)(B)(ii) of the Act (as added by section 3401(b) of the Affordable Care Act) and § 413.337(d)(3), this market basket percentage is then reduced by the MFP adjustment (the 10-year moving average of changes in MFP for the period ending September 30, 2016) of 0.6 percent, which is calculated as described above and based on IGI's first quarter 2015 forecast. The resulting MFP-adjusted SNF market basket update is equal to 1.4 percent, or 2.0 percent less 0.6 percentage point.

5. Market Basket Update Factor for FY 2016

Sections 1888(e)(4)(E)(ii)(IV) and 1888(e)(5)(i) of the Act require that the update factor used to establish the FY 2016 unadjusted federal rates be at a level equal to the market basket index percentage change. Accordingly, we determined the total growth from the average market basket level for the period of October 1, 2014 through September 30, 2015 to the average market basket level for the period of October 1, 2015 through September 30, 2016. This process yields a percentage change in the market basket of 2.6 percent.

As further explained in section III.B.3. of this proposed rule, as applicable, we adjust the market basket percentage change by the forecast error from the most recently available FY for which

there is final data and apply this adjustment whenever the difference between the forecasted and actual percentage change in the market basket exceeds a 0.5 percentage point threshold. Since the forecasted FY 2014 SNF market basket percentage change exceeded the actual FY 2014 SNF market basket percentage change (FY 2014 is the most recently available FY for which there is historical data) by more than 0.5 percentage point, the FY 2016 market basket percentage change of 2.6 percent would be adjusted downward by the applicable difference, which for FY 2014 is 0.6 percent.

In addition, for FY 2016, section 1888(e)(5)(B)(ii) of the Act requires us to reduce the market basket percentage change by the MFP adjustment (the 10-year moving average of changes in MFP for the period ending September 30, 2016) of 0.6 percent, as described in section III.B.4. of this proposed rule. The resulting net SNF market basket update would equal 1.4 percent, or 2.6 percent less the 0.6 percentage point forecast error adjustment, less the 0.6 percentage point MFP adjustment. We propose that if more recent data become available (for example, a more recent estimate of the FY 2010-based SNF market basket and/or MFP adjustment), we would use such data, if appropriate, to determine the FY 2016 SNF market basket percentage change, labor-related share relative importance, forecast error adjustment, and MFP adjustment in the FY 2016 SNF PPS final rule.

We used the SNF market basket, adjusted as described above, to adjust each per diem component of the federal rates forward to reflect the change in the average prices for FY 2016 from average prices for FY 2015. We would further adjust the rates by a wage index budget neutrality factor, described later in this section. Tables 2 and 3 reflect the updated components of the unadjusted federal rates for FY 2016, prior to adjustment for case-mix.

TABLE 2—FY 2016 UNADJUSTED FEDERAL RATE PER DIEM URBAN

Rate component	Nursing—case-mix	Therapy—case-mix	Therapy—non-case-mix	Non-case-mix
Per Diem Amount	$171.46	$129.15	$17.01	$87.50

TABLE 3—FY 2016 UNADJUSTED FEDERAL RATE PER DIEM RURAL

Rate component	Nursing—case-mix	Therapy—case-mix	Therapy—non-case-mix	Non-case-mix
Per Diem Amount	$163.80	$148.91	$18.17	$89.12

C. Case-Mix Adjustment

Under section 1888(e)(4)(G)(i) of the Act, the federal rate also incorporates an adjustment to account for facility case-mix, using a classification system that accounts for the relative resource utilization of different patient types. The statute specifies that the adjustment is to reflect both a resident classification system that the Secretary establishes to account for the relative resource use of different patient types, as well as resident assessment data and other data that the Secretary considers appropriate. In the interim final rule with comment period that initially implemented the SNF PPS (63 FR 26252, May 12, 1998), we developed the RUG–III case-mix classification system, which tied the amount of payment to resident resource use in combination with resident characteristic information. Staff time measurement (STM) studies conducted in 1990, 1995, and 1997 provided information on resource use (time spent by staff members on residents) and resident characteristics that enabled us not only to establish RUG–III, but also to create case-mix indexes (CMIs). The original RUG–III grouper logic was based on clinical data collected in 1990, 1995, and 1997. As discussed in the SNF PPS proposed rule for FY 2010 (74 FR 22208), we subsequently conducted a multi-year data collection and analysis under the Staff Time and Resource Intensity Verification (STRIVE) project to update the case-mix classification system for FY 2011. The resulting Resource Utilization Groups, Version 4 (RUG–IV) case-mix classification system reflected the data collected in 2006–2007 during the STRIVE project, and was finalized in the FY 2010 SNF PPS final rule (74 FR 40288) to take effect in FY 2011 concurrently with an updated new resident assessment instrument, version 3.0 of the Minimum Data Set (MDS 3.0), which collects the clinical data used for case-mix classification under RUG–IV.

We note that case-mix classification is based, in part, on the beneficiary's need for skilled nursing care and therapy services. The case-mix classification system uses clinical data from the MDS to assign a case-mix group to each patient that is then used to calculate a per diem payment under the SNF PPS. As discussed in section IV.A. of this proposed rule, the clinical orientation of the case-mix classification system supports the SNF PPS's use of an administrative presumption that considers a beneficiary's initial case-mix classification to assist in making certain SNF level of care determinations. Further, because the MDS is used as a basis for payment, as well as a clinical assessment, we have provided extensive training on proper coding and the time frames for MDS completion in our Resident Assessment Instrument (RAI) Manual. For an MDS to be considered valid for use in determining payment, the MDS assessment must be completed in compliance with the instructions in the RAI Manual in effect at the time the assessment is completed. For payment and quality monitoring purposes, the RAI Manual consists of both the Manual instructions and the interpretive guidance and policy clarifications posted on the appropriate MDS Web site at *http://www.cms.gov/Medicare/Quality-Initiatives-Patient-Assessment-Instruments/NursingHomeQualityInits/MDS30RAIManual.html.*

In addition, we note that section 511 of the Medicare Prescription Drug, Improvement, and Modernization Act of 2003 (MMA, Pub. L. 108–173) amended section 1888(e)(12) of the Act to provide for a temporary increase of 128 percent in the PPS per diem payment for any SNF residents with Acquired Immune Deficiency Syndrome (AIDS), effective with services furnished on or after October 1, 2004. This special add-on for SNF residents with AIDS was to remain in effect until the Secretary certifies that there is an appropriate adjustment in the case mix to compensate for the increased costs associated with such

residents. The add-on for SNF residents with AIDS is also discussed in Program Transmittal #160 (Change Request #3291), issued on April 30, 2004, which is available online at *www.cms.gov/transmittals/downloads/r160cp.pdf.* In the SNF PPS final rule for FY 2010 (74 FR 40288), we did not address the certification of the add-on for SNF residents with AIDS in that final rule's implementation of the case-mix refinements for RUG–IV, thus allowing the add-on payment required by section 511 of the MMA to remain in effect. For the limited number of SNF residents that qualify for this add-on, there is a significant increase in payments. For example, using FY 2013 data, we identified fewer than 4,800 SNF residents with a diagnosis code of 042 (Human Immunodeficiency Virus (HIV) Infection). For FY 2016, an urban facility with a resident with AIDS in RUG–IV group ''HC2'' would have a case-mix adjusted per diem payment of $428.57 (see Table 4) before the application of the MMA adjustment. After an increase of 128 percent, this urban facility would receive a case-mix adjusted per diem payment of approximately $977.14.

Currently, we use the International Classification of Diseases, 9th revision, Clinical Modification (ICD–9–CM) code 042 to identify those residents for whom it is appropriate to apply the AIDS add-on established by section 511 of the MMA. In this context, we note that the Department published a final rule in the September 5, 2012 **Federal Register** (77 FR 54664) which requires us to stop using ICD–9–CM on September 30, 2014, and begin using the International Classification of Diseases, 10th revision, Clinical Modification (ICD–10–CM), on October 1, 2014. Regarding the above-referenced ICD–9–CM diagnosis code of 042, in the FY 2014 SNF PPS proposed rule (78 FR 26444, May 6, 2013), we proposed to transition to the equivalent ICD–10–CM diagnosis code of B20 upon the overall conversion to ICD–10–CM on October 1, 2014, and we subsequently finalized that proposal in the FY 2014 SNF PPS final rule (78 FR 47951 through 47952).

However, on April 1, 2014, the Protecting Access to Medicare Act of 2014 (PAMA) (Pub. L. 113–93) was enacted. Section 212 of PAMA, titled ''Delay in Transition from ICD–9 to ICD–10 Code Sets,'' provides that the Secretary of Health and Human Services may not, prior to October 1, 2015, adopt ICD–10 code sets as the standard for code sets under section 1173(c) of the Act (42 U.S.C. 1320d–2(c)) and section 162.1002 of title 45, Code of Federal Regulations. In the FY 2015 SNF PPS final rule (79 FR 45633), we stated that the Department expected to release an interim final rule in the near future that would include a new compliance date that would require the use of ICD–10 beginning October 1, 2015. In light of this, in the FY 2015 SNF PPS final rule, we stated that the effective date of the change from ICD–9–CM code 042 to ICD–10–CM code B20 for purposes of applying the AIDS add-on is October 1, 2015, and that until that time we would continue to use the ICD–9–CM code 042 for this purpose. On August 4, 2014, the U.S. Department of Health and Human Services released a final rule in the **Federal Register** (79 FR 45128 through 45134) that included a new compliance date that requires the use of ICD–10 beginning October 1, 2015. The August 4, 2014 final rule is available for viewing on the Internet at *http://www.gpo.gov/fdsys/pkg/FR-2014-08-04/pdf/2014-18347.pdf.* That final rule also requires HIPAA covered entities to continue to use ICD–9–CM through September 30, 2015. Thus, as we finalized in the FY 2015 SNF PPS final rule, the effective date of the change from ICD–9–CM code 042 to ICD–10–CM code B20 for the purpose of applying the AIDS add-on enacted by section 511 of the MMA is October 1, 2015.

Under section 1888(e)(4)(H), each update of the payment rates must include the case-mix classification methodology applicable for the upcoming FY. The payment rates set forth in this proposed rule reflect the use of the RUG–IV case-mix classification system from October 1, 2015, through September 30, 2016. We list the proposed case-mix adjusted RUG–IV payment rates, provided separately for urban and rural SNFs, in Tables 4 and 5 with corresponding case-mix values. We use the revised OMB delineations adopted in the FY 2015 SNF PPS final rule (79 FR 45632, 45634) to identify a facility's urban or rural status for the purpose of determining which set of rate tables would apply to the facility. These tables do not reflect the add-on for SNF residents with AIDS enacted by section 511 of the MMA, which we apply only after making all other adjustments (such as wage index and case-mix).

TABLE 4—RUG–IV CASE-MIX ADJUSTED FEDERAL RATES AND ASSOCIATED INDEXES
URBAN

RUG–IV Category	Nursing index	Therapy index	Nursing component	Therapy component	Non-case mix therapy comp	Non-case mix component	Total rate
RUX	2.67	1.87	$457.80	$241.51		$87.50	$786.81
RUL	2.57	1.87	440.65	241.51		87.50	769.66
RVX	2.61	1.28	447.51	165.31		87.50	700.32
RVL	2.19	1.28	375.50	165.31		87.50	628.31
RHX	2.55	0.85	437.22	109.78		87.50	634.50
RHL	2.15	0.85	368.64	109.78		87.50	565.92
RMX	2.47	0.55	423.51	71.03		87.50	582.04
RML	2.19	0.55	375.50	71.03		87.50	534.03
RLX	2.26	0.28	387.50	36.16		87.50	511.16
RUC	1.56	1.87	267.48	241.51		87.50	596.49
RUB	1.56	1.87	267.48	241.51		87.50	596.49
RUA	0.99	1.87	169.75	241.51		87.50	498.76
RVC	1.51	1.28	258.90	165.31		87.50	511.71
RVB	1.11	1.28	190.32	165.31		87.50	443.13
RVA	1.10	1.28	188.61	165.31		87.50	441.42
RHC	1.45	0.85	248.62	109.78		87.50	445.90
RHB	1.19	0.85	204.04	109.78		87.50	401.32
RHA	0.91	0.85	156.03	109.78		87.50	353.31
RMC	1.36	0.55	233.19	71.03		87.50	391.72
RMB	1.22	0.55	209.18	71.03		87.50	367.71

TABLE 4—RUG–IV CASE-MIX ADJUSTED FEDERAL RATES AND ASSOCIATED INDEXES—Continued
URBAN

RUG–IV Category	Nursing index	Therapy index	Nursing component	Therapy component	Non-case mix therapy comp	Non-case mix component	Total rate
RMA	0.84	0.55	144.03	71.03		87.50	302.56
RLB	1.50	0.28	257.19	36.16		87.50	380.85
RLA	0.71	0.28	121.74	36.16		87.50	245.40
ES3	3.58		613.83		17.01	87.50	718.34
ES2	2.67		457.80		17.01	87.50	562.31
ES1	2.32		397.79		17.01	87.50	502.30
HE2	2.22		380.64		17.01	87.50	485.15
HE1	1.74		298.34		17.01	87.50	402.85
HD2	2.04		349.78		17.01	87.50	454.29
HD1	1.60		274.34		17.01	87.50	378.85
HC2	1.89		324.06		17.01	87.50	428.57
HC1	1.48		253.76		17.01	87.50	358.27
HB2	1.86		318.92		17.01	87.50	423.43
HB1	1.46		250.33		17.01	87.50	354.84
LE2	1.96		336.06		17.01	87.50	440.57
LE1	1.54		264.05		17.01	87.50	368.56
LD2	1.86		318.92		17.01	87.50	423.43
LD1	1.46		250.33		17.01	87.50	354.84
LC2	1.56		267.48		17.01	87.50	371.99
LC1	1.22		209.18		17.01	87.50	313.69
LB2	1.45		248.62		17.01	87.50	353.13
LB1	1.14		195.46		17.01	87.50	299.97
CE2	1.68		288.05		17.01	87.50	392.56
CE1	1.50		257.19		17.01	87.50	361.70
CD2	1.56		267.48		17.01	87.50	371.99
CD1	1.38		236.61		17.01	87.50	341.12
CC2	1.29		221.18		17.01	87.50	325.69
CC1	1.15		197.18		17.01	87.50	301.69
CB2	1.15		197.18		17.01	87.50	301.69
CB1	1.02		174.89		17.01	87.50	279.40
CA2	0.88		150.88		17.01	87.50	255.39
CA1	0.78		133.74		17.01	87.50	238.25
BB2	0.97		166.32		17.01	87.50	270.83
BB1	0.90		154.31		17.01	87.50	258.82
BA2	0.70		120.02		17.01	87.50	224.53
BA1	0.64		109.73		17.01	87.50	214.24
PE2	1.50		257.19		17.01	87.50	361.70
PE1	1.40		240.04		17.01	87.50	344.55
PD2	1.38		236.61		17.01	87.50	341.12
PD1	1.28		219.47		17.01	87.50	323.98
PC2	1.10		188.61		17.01	87.50	293.12
PC1	1.02		174.89		17.01	87.50	279.40
PB2	0.84		144.03		17.01	87.50	248.54
PB1	0.78		133.74		17.01	87.50	238.25
PA2	0.59		101.16		17.01	87.50	205.67
PA1	0.54		92.59		17.01	87.50	197.10

TABLE 5—RUG–IV CASE-MIX ADJUSTED FEDERAL RATES AND ASSOCIATED INDEXES
RURAL

RUG–IV Category	Nursing index	Therapy index	Nursing component	Therapy component	Non-case mix therapy comp	Non-case mix component	Total rate
RUX	2.67	1.87	$437.35	$278.46		$89.12	$804.93
RUL	2.57	1.87	420.97	278.46		89.12	788.55
RVX	2.61	1.28	427.52	190.60		89.12	707.24
RVL	2.19	1.28	358.72	190.60		89.12	638.44
RHX	2.55	0.85	417.69	126.57		89.12	633.38
RHL	2.15	0.85	352.17	126.57		89.12	567.86
RMX	2.47	0.55	404.59	81.90		89.12	575.61
RML	2.19	0.55	358.72	81.90		89.12	529.74
RLX	2.26	0.28	370.19	41.69		89.12	501.00
RUC	1.56	1.87	255.53	278.46		89.12	623.11
RUB	1.56	1.87	255.53	278.46		89.12	623.11
RUA	0.99	1.87	162.16	278.46		89.12	529.74
RVC	1.51	1.28	247.34	190.60		89.12	527.06
RVB	1.11	1.28	181.82	190.60		89.12	461.54

TABLE 5—RUG–IV CASE-MIX ADJUSTED FEDERAL RATES AND ASSOCIATED INDEXES—Continued
RURAL

RUG–IV Category	Nursing index	Therapy index	Nursing component	Therapy component	Non-case mix therapy comp	Non-case mix component	Total rate
RVA	1.10	1.28	180.18	190.60		89.12	459.90
RHC	1.45	0.85	237.51	126.57		89.12	453.20
RHB	1.19	0.85	194.92	126.57		89.12	410.61
RHA	0.91	0.85	149.06	126.57		89.12	364.75
RMC	1.36	0.55	222.77	81.90		89.12	393.79
RMB	1.22	0.55	199.84	81.90		89.12	370.86
RMA	0.84	0.55	137.59	81.90		89.12	308.61
RLB	1.50	0.28	245.70	41.69		89.12	376.51
RLA	0.71	0.28	116.30	41.69		89.12	247.11
ES3	3.58		586.40		$18.17	89.12	693.69
ES2	2.67		437.35		18.17	89.12	544.64
ES1	2.32		380.02		18.17	89.12	487.31
HE2	2.22		363.64		18.17	89.12	470.93
HE1	1.74		285.01		18.17	89.12	392.30
HD2	2.04		334.15		18.17	89.12	441.44
HD1	1.60		262.08		18.17	89.12	369.37
HC2	1.89		309.58		18.17	89.12	416.87
HC1	1.48		242.42		18.17	89.12	349.71
HB2	1.86		304.67		18.17	89.12	411.96
HB1	1.46		239.15		18.17	89.12	346.44
LE2	1.96		321.05		18.17	89.12	428.34
LE1	1.54		252.25		18.17	89.12	359.54
LD2	1.86		304.67		18.17	89.12	411.96
LD1	1.46		239.15		18.17	89.12	346.44
LC2	1.56		255.53		18.17	89.12	362.82
LC1	1.22		199.84		18.17	89.12	307.13
LB2	1.45		237.51		18.17	89.12	344.80
LB1	1.14		186.73		18.17	89.12	294.02
CE2	1.68		275.18		18.17	89.12	382.47
CE1	1.50		245.70		18.17	89.12	352.99
CD2	1.56		255.53		18.17	89.12	362.82
CD1	1.38		226.04		18.17	89.12	333.33
CC2	1.29		211.30		18.17	89.12	318.59
CC1	1.15		188.37		18.17	89.12	295.66
CB2	1.15		188.37		18.17	89.12	295.66
CB1	1.02		167.08		18.17	89.12	274.37
CA2	0.88		144.14		18.17	89.12	251.43
CA1	0.78		127.76		18.17	89.12	235.05
BB2	0.97		158.89		18.17	89.12	266.18
BB1	0.90		147.42		18.17	89.12	254.71
BA2	0.70		114.66		18.17	89.12	221.95
BA1	0.64		104.83		18.17	89.12	212.12
PE2	1.50		245.70		18.17	89.12	352.99
PE1	1.40		229.32		18.17	89.12	336.61
PD2	1.38		226.04		18.17	89.12	333.33
PD1	1.28		209.66		18.17	89.12	316.95
PC2	1.10		180.18		18.17	89.12	287.47
PC1	1.02		167.08		18.17	89.12	274.37
PB2	0.84		137.59		18.17	89.12	244.88
PB1	0.78		127.76		18.17	89.12	235.05
PA2	0.59		96.64		18.17	89.12	203.93
PA1	0.54		88.45		18.17	89.12	195.74

D. Wage Index Adjustment

Section 1888(e)(4)(G)(ii) of the Act requires that we adjust the federal rates to account for differences in area wage levels, using a wage index that the Secretary determines appropriate. Since the inception of the SNF PPS, we have used hospital inpatient wage data in developing a wage index to be applied to SNFs. We propose to continue this practice for FY 2016, as we continue to believe that in the absence of SNF-specific wage data, using the hospital inpatient wage index data is appropriate and reasonable for the SNF PPS. As explained in the update notice for FY 2005 (69 FR 45786), the SNF PPS does not use the hospital area wage index's occupational mix adjustment, as this adjustment serves specifically to define the occupational categories more clearly in a hospital setting; moreover, the collection of the occupational wage data also excludes any wage data related to SNFs. Therefore, we believe that using the updated wage data exclusive of the occupational mix adjustment continues to be appropriate for SNF payments. For FY 2016, the updated wage data are for hospital cost reporting periods beginning on or after October 1, 2011 and before October 1, 2012 (FY 2012 cost report data).

We note that section 315 of the Medicare, Medicaid, and SCHIP Benefits Improvement and Protection

Act of 2000 (BIPA, Pub. L. 106–554, enacted on December 21, 2000) authorized us to establish a geographic reclassification procedure that is specific to SNFs, but only after collecting the data necessary to establish a SNF wage index that is based on wage data from nursing homes. However, to date, this has proven to be unfeasible due to the volatility of existing SNF wage data and the significant amount of resources that would be required to improve the quality of that data.

In addition, we propose to continue to use the same methodology discussed in the SNF PPS final rule for FY 2008 (72 FR 43423) to address those geographic areas in which there are no hospitals, and thus, no hospital wage index data on which to base the calculation of the FY 2016 SNF PPS wage index. For rural geographic areas that do not have hospitals, and therefore, lack hospital wage data on which to base an area wage adjustment, we would use the average wage index from all contiguous Core-Based Statistical Areas (CBSAs) as a reasonable proxy. For FY 2016, there are no rural geographic areas that do not have hospitals, and thus, this methodology would not be applied. For rural Puerto Rico, we would not apply this methodology due to the distinct economic circumstances that exist there (for example, due to the close proximity to one another of almost all of Puerto Rico's various urban and non-urban areas, this methodology would produce a wage index for rural Puerto Rico that is higher than that in half of its urban areas); instead, we would continue to use the most recent wage index previously available for that area. For urban areas without specific hospital wage index data, we would use the average wage indexes of all of the urban areas within the state to serve as a reasonable proxy for the wage index of that urban CBSA. For FY 2016, the only urban area without wage index data available is CBSA 25980, Hinesville-Fort Stewart, GA. The proposed wage index applicable to FY 2016 is set forth in Table A available on the CMS Web site at *http://cms.gov/Medicare/Medicare-Fee-for-Service-Payment/SNFPPS/WageIndex.html*.

Once calculated, we would apply the wage index adjustment to the labor-related portion of the federal rate. Each year, we calculate a revised labor-related share, based on the relative importance of labor-related cost categories (that is, those cost categories that are labor-intensive and vary with the local labor market) in the input price index. In the SNF PPS final rule for FY 2014 (78 FR 47944 through 47946), we finalized a proposal to revise the labor-related share to reflect the relative importance of the revised FY 2010-based SNF market basket cost weights for the following cost categories: Wages and salaries; employee benefits; the labor-related portion of nonmedical professional fees; administrative and facilities support services; all other—labor-related services; and a proportion of capital-related expenses.

We calculate the labor-related relative importance from the SNF market basket, and it approximates the labor-related portion of the total costs after taking into account historical and projected price changes between the base year and FY 2016. The price proxies that move the different cost categories in the market basket do not necessarily change at the same rate, and the relative importance captures these changes. Accordingly, the relative importance figure more closely reflects the cost share weights for FY 2016 than the base year weights from the SNF market basket.

We calculate the labor-related relative importance for FY 2016 in four steps. First, we compute the FY 2016 price index level for the total market basket and each cost category of the market basket. Second, we calculate a ratio for each cost category by dividing the FY 2016 price index level for that cost category by the total market basket price index level. Third, we determine the FY 2016 relative importance for each cost category by multiplying this ratio by the base year (FY 2010) weight. Finally, we add the FY 2016 relative importance for each of the labor-related cost categories (wages and salaries, employee benefits, the labor-related portion of non-medical professional fees, administrative and facilities support services, all other: labor-related services, and a portion of capital-related expenses) to produce the FY 2016 labor-related relative importance. Table 6 summarizes the proposed updated labor-related share for FY 2016, compared to the labor-related share that was used for the FY 2015 SNF PPS final rule.

We are proposing for FY 2016 and subsequent fiscal years, to report and apply the SNF PPS labor-related share at a tenth of a percentage point (rather than at a thousandth of a percentage point) consistent with the manner in which we report and apply the market basket update percentage under the SNF PPS and the IPPS and the manner in which we report and apply the IPPS labor-related share. The level of precision specified for the IPPS labor-related share is three decimal places or a tenth of a percentage point (0.696 or 69.6 percent), which we believe provides a reasonable level of precision. We believe it is appropriate to maintain such consistency across all payment systems so that the level of precision specified is both reasonable and similar for all providers. We invite public comments on this proposal.

TABLE 6—LABOR-RELATED RELATIVE IMPORTANCE, FY 2015 AND FY 2016

	Relative importance, labor-related, FY 2015 14:2 forecast [1]	Relative importance, labor-related, FY 2016 15:1 forecast [2]
Wages and salaries	48.816	48.9
Employee benefits	11.365	11.4
Nonmedical Professional fees: labor-related	3.450	3.4
Administrative and facilities support services	0.502	0.5
All Other: Labor-related services	2.276	2.3
Capital-related (.391)	2.771	2.7
Total	69.180	69.2

[1] Published in the **Federal Register**; based on second quarter 2014 IGI forecast.
[2] Based on first quarter 2015 IGI forecast, with historical data through fourth quarter 2014.

Tables 7 and 8 show the RUG–IV case-mix adjusted federal rates by labor-related and non-labor-related components.

TABLE 7—RUG–IV CASE-MIX ADJUSTED FEDERAL RATES FOR URBAN SNFS BY LABOR AND NON-LABOR COMPONENT

RUG–IV category	Total rate	Labor portion	Non-labor portion
RUX	786.81	$544.47	$242.34
RUL	769.66	532.60	237.06
RVX	700.32	484.62	215.70
RVL	628.31	434.79	193.52
RHX	634.50	439.07	195.43
RHL	565.92	391.62	174.30
RMX	582.04	402.77	179.27
RML	534.03	369.55	164.48
RLX	511.16	353.72	157.44
RUC	596.49	412.77	183.72
RUB	596.49	412.77	183.72
RUA	498.76	345.14	153.62
RVC	511.71	354.10	157.61
RVB	443.13	306.65	136.48
RVA	441.42	305.46	135.96
RHC	445.90	308.56	137.34
RHB	401.32	277.71	123.61
RHA	353.31	244.49	108.82
RMC	391.72	271.07	120.65
RMB	367.71	254.46	113.25
RMA	302.56	209.37	93.19
RLB	380.85	263.55	117.30
RLA	245.40	169.82	75.58
ES3	718.34	497.09	221.25
ES2	562.31	389.12	173.19
ES1	502.30	347.59	154.71
HE2	485.15	335.72	149.43
HE1	402.85	278.77	124.08
HD2	454.29	314.37	139.92
HD1	378.85	262.16	116.69
HC2	428.57	296.57	132.00
HC1	358.27	247.92	110.35
HB2	423.43	293.01	130.42
HB1	354.84	245.55	109.29
LE2	440.57	304.87	135.70
LE1	368.56	255.04	113.52
LD2	423.43	293.01	130.42
LD1	354.84	245.55	109.29
LC2	371.99	257.42	114.57
LC1	313.69	217.07	96.62
LB2	353.13	244.37	108.76
LB1	299.97	207.58	92.39
CE2	392.56	271.65	120.91
CE1	361.70	250.30	111.40
CD2	371.99	257.42	114.57
CD1	341.12	236.06	105.06
CC2	325.69	225.38	100.31
CC1	301.69	208.77	92.92
CB2	301.69	208.77	92.92
CB1	279.40	193.34	86.06
CA2	255.39	176.73	78.66
CA1	238.25	164.87	73.38
BB2	270.83	187.41	83.42
BB1	258.82	179.10	79.72
BA2	224.53	155.37	69.16
BA1	214.24	148.25	65.99
PE2	361.70	250.30	111.40
PE1	344.55	238.43	106.12
PD2	341.12	236.06	105.06
PD1	323.98	224.19	99.79
PC2	293.12	202.84	90.28
PC1	279.40	193.34	86.06
PB2	248.54	171.99	76.55
PB1	238.25	164.87	73.38
PA2	205.67	142.32	63.35
PA1	197.10	136.39	60.71

TABLE 8—RUG–IV CASE-MIX ADJUSTED FEDERAL RATES FOR RURAL SNFS BY LABOR AND NON-LABOR COMPONENT

RUG–IV category	Total rate	Labor portion	Non-labor portion
RUX	804.93	$557.01	$247.92

TABLE 8—RUG–IV CASE-MIX ADJUSTED FEDERAL RATES FOR RURAL SNFS BY LABOR AND NON-LABOR COMPONENT—Continued

RUG–IV category	Total rate	Labor portion	Non-labor portion
RUL	788.55	545.68	242.87
RVX	707.24	489.41	217.83
RVL	638.44	441.80	196.64
RHX	633.38	438.30	195.08
RHL	567.86	392.96	174.90
RMX	575.61	398.32	177.29
RML	529.74	366.58	163.16
RLX	501.00	346.69	154.31
RUC	623.11	431.19	191.92
RUB	623.11	431.19	191.92
RUA	529.74	366.58	163.16
RVC	527.06	364.73	162.33
RVB	461.54	319.39	142.15
RVA	459.90	318.25	141.65
RHC	453.20	313.61	139.59
RHB	410.61	284.14	126.47
RHA	364.75	252.41	112.34
RMC	393.79	272.50	121.29
RMB	370.86	256.64	114.22
RMA	308.61	213.56	95.05
RLB	376.51	260.54	115.97
RLA	247.11	171.00	76.11
ES3	693.69	480.03	213.66
ES2	544.64	376.89	167.75
ES1	487.31	337.22	150.09
HE2	470.93	325.88	145.05
HE1	392.30	271.47	120.83
HD2	441.44	305.48	135.96
HD1	369.37	255.60	113.77
HC2	416.87	288.47	128.40
HC1	349.71	242.00	107.71
HB2	411.96	285.08	126.88
HB1	346.44	239.74	106.70
LE2	428.34	296.41	131.93
LE1	359.54	248.80	110.74
LD2	411.96	285.08	126.88
LD1	346.44	239.74	106.70
LC2	362.82	251.07	111.75
LC1	307.13	212.53	94.60
LB2	344.80	238.60	106.20
LB1	294.02	203.46	90.56
CE2	382.47	264.67	117.80
CE1	352.99	244.27	108.72
CD2	362.82	251.07	111.75
CD1	333.33	230.66	102.67
CC2	318.59	220.46	98.13
CC1	295.66	204.60	91.06
CB2	295.66	204.60	91.06
CB1	274.37	189.86	84.51
CA2	251.43	173.99	77.44
CA1	235.05	162.65	72.40
BB2	266.18	184.20	81.98
BB1	254.71	176.26	78.45
BA2	221.95	153.59	68.36
BA1	212.12	146.79	65.33
PE2	352.99	244.27	108.72
PE1	336.61	232.93	103.68
PD2	333.33	230.66	102.67
PD1	316.95	219.33	97.62
PC2	287.47	198.93	88.54
PC1	274.37	189.86	84.51
PB2	244.88	169.46	75.42
PB1	235.05	162.65	72.40
PA2	203.93	141.12	62.81
PA1	195.74	135.45	60.29

Section 1888(e)(4)(G)(ii) of the Act also requires that we apply this wage index in a manner that does not result in aggregate payments under the SNF PPS that are greater or less than would otherwise be made if the wage

adjustment had not been made. For FY 2016 (federal rates effective October 1, 2014), we would apply an adjustment to fulfill the budget neutrality requirement. We would meet this requirement by multiplying each of the components of the unadjusted federal rates by a budget neutrality factor equal to the ratio of the weighted average wage adjustment factor for FY 2015 to the weighted average wage adjustment factor for FY 2016. For this calculation, we use the same FY 2014 claims utilization data for both the numerator and denominator of this ratio. We define the wage adjustment factor used in this calculation as the labor share of the rate component multiplied by the wage index plus the non-labor share of the rate component. The budget neutrality factor for FY 2016 would be 0.9989.

In the SNF PPS final rule for FY 2006 (70 FR 45026, August 4, 2005), we adopted the changes discussed in the OMB Bulletin No. 03–04 (June 6, 2003), available online at *www.whitehouse.gov/omb/bulletins/b03-04.html,* which announced revised definitions for MSAs and the creation of micropolitan statistical areas and combined statistical areas.

In adopting the CBSA geographic designations, we provided for a one-year transition in FY 2006 with a blended wage index for all providers. For FY 2006, the wage index for each provider consisted of a blend of 50 percent of the FY 2006 MSA-based wage index and 50 percent of the FY 2006 CBSA-based wage index (both using FY 2002 hospital data). We referred to the blended wage index as the FY 2006 SNF PPS transition wage index. As discussed in the SNF PPS final rule for FY 2006 (70 FR 45041), since the expiration of this one-year transition on September 30, 2006, we have used the full CBSA-based wage index values.

On February 28, 2013, OMB issued OMB Bulletin No. 13–01, announcing revisions to the delineation of MSAs, Micropolitan Statistical Areas, and Combined Statistical Areas, and guidance on uses of the delineation of these areas. A copy of this bulletin is available online at *http://www.whitehouse.gov/sites/default/files/omb/bulletins/2013/b-13-01.pdf.* This bulletin states that it provides the delineations of all Metropolitan Statistical Areas, Metropolitan Divisions, Micropolitan Statistical Areas, Combined Statistical Areas, and New England City and Town Areas in the United States and Puerto Rico based on the standards published on June 28, 2010, in the **Federal Register** (75 FR 37246–37252) and Census Bureau data.

While the revisions OMB published on February 28, 2013 are not as sweeping as the changes made when we adopted the CBSA geographic designations for FY 2006, the February 28, 2013 bulletin does contain a number of significant changes. For example, there are new CBSAs, urban counties that became rural, rural counties that became urban, and existing CBSAs that were split apart.

In the FY 2015 SNF PPS final rule (79 FR 45644 through 45646), we finalized changes to the SNF PPS wage index based on the newest OMB delineations, as described in OMB Bulletin No. 13–01, beginning in FY 2015, including a 1-year transition with a blended wage index for FY 2015. Because the 1-year transition period expires at the end of FY 2015, the proposed SNF PPS wage index for FY 2016 is fully based on the revised OMB delineations adopted in FY 2015. As noted above, the proposed wage index applicable to FY 2016 is set forth in Table A available on the CMS Web site at *http://cms.gov/Medicare/Medicare-Fee-for-Service-Payment/SNFPPS/WageIndex.html.*

E. Adjusted Rate Computation Example

Using the hypothetical SNF XYZ described below, Table 9 shows the adjustments made to the federal per diem rates to compute the provider's actual per diem PPS payment. We derive the Labor and Non-labor columns from Table 7. The wage index used in this example is based on the proposed wage index, which may be found in Table A as referenced above. As illustrated in Table 9, SNF XYZ's total PPS payment would equal $45,462.10.

TABLE 9—ADJUSTED RATE COMPUTATION EXAMPLE
SNF XYZ: LOCATED IN FREDERICK, MD (URBAN CBSA 43524)
WAGE INDEX: 0.9681
[See Proposed Wage Index in Table A] [1]

RUG–IV Group	Labor	Wage index	Adjusted labor	Non-labor	Adjusted rate	Percent adjustment	Medicare days	Payment
RVX	$484.62	0.9681	$469.16	$215.70	$684.86	$684.86	14	$9,588.04
ES2	389.12	0.9681	376.71	173.19	549.90	549.90	30	16,497.00
RHA	244.49	0.9681	236.69	108.82	345.51	345.51	16	5,528.16
CC2*	225.38	0.9681	218.19	100.31	318.50	726.18	10	7,261.80
BA2	155.37	0.9681	150.41	69.16	219.57	219.57	30	6,587.10
							100	45,462.10

* Reflects a 128 percent adjustment from section 511 of the MMA.
[1] Available on the CMS Web site at *http://www.cms.gov/Medicare/Medicare-Fee-for-Service-Payment/SNFPPS/WageIndex.html.*

IV. Additional Aspects of the SNF PPS

A. SNF Level of Care—Administrative Presumption

The establishment of the SNF PPS did not change Medicare's fundamental requirements for SNF coverage. However, because the case-mix classification is based, in part, on the beneficiary's need for skilled nursing care and therapy, we have attempted, where possible, to coordinate claims review procedures with the existing resident assessment process and case-mix classification system discussed in section III.C. of this proposed rule. This approach includes an administrative presumption that utilizes a beneficiary's initial classification in one of the upper 52 RUGs of the 66-group RUG–IV case-mix classification system to assist in making certain SNF level of care determinations.

In accordance with section 1888(e)(4)(H)(ii) of the Act and the regulations at § 413.345, we include in each update of the federal payment rates in the **Federal Register** the designation of those specific RUGs under the classification system that represent the required SNF level of care, as provided in § 409.30. As set forth in the FY 2011 SNF PPS update notice (75 FR 42910), this designation reflects an administrative presumption under the

66-group RUG–IV system that beneficiaries who are correctly assigned to one of the upper 52 RUG–IV groups on the initial five-day, Medicare-required assessment are automatically classified as meeting the SNF level of care definition up to and including the assessment reference date on the five-day Medicare-required assessment.

A beneficiary assigned to any of the lower 14 RUG–IV groups is not automatically classified as either meeting or not meeting the definition, but instead receives an individual level of care determination using the existing administrative criteria. This presumption recognizes the strong likelihood that beneficiaries assigned to one of the upper 52 RUG–IV groups during the immediate post-hospital period require a covered level of care, which would be less likely for those beneficiaries assigned to one of the lower 14 RUG–IV groups.

In the July 30, 1999 final rule (64 FR 41670), we indicated that we would announce any changes to the guidelines for Medicare level of care determinations related to modifications in the case-mix classification structure. In this proposed rule, we would continue to designate the upper 52 RUG–IV groups for purposes of this administrative presumption, consisting of all groups encompassed by the following RUG–IV categories:

- Rehabilitation plus Extensive Services.
- Ultra High Rehabilitation.
- Very High Rehabilitation.
- High Rehabilitation.
- Medium Rehabilitation.
- Low Rehabilitation.
- Extensive Services.
- Special Care High.
- Special Care Low.
- Clinically Complex.

However, we note that this administrative presumption policy does not supersede the SNF's responsibility to ensure that its decisions relating to level of care are appropriate and timely, including a review to confirm that the services prompting the beneficiary's assignment to one of the upper 52 RUG–IV groups (which, in turn, serves to trigger the administrative presumption) are themselves medically necessary. As we explained in the FY 2000 SNF PPS final rule (64 FR 41667), the administrative presumption:

> . . . is itself rebuttable in those individual cases in which the services actually received by the resident do not meet the basic statutory criterion of being reasonable and necessary to diagnose or treat a beneficiary's condition (according to section 1862(a)(1) of the Act). Accordingly, the presumption would not apply, for example, in those situations in which a resident's assignment to one of the upper . . . groups is itself based on the receipt of services that are subsequently determined to be not reasonable and necessary.

Moreover, we want to stress the importance of careful monitoring for changes in each patient's condition to determine the continuing need for Part A SNF benefits after the assessment reference date of the 5-day assessment.

B. Consolidated Billing

Sections 1842(b)(6)(E) and 1862(a)(18) of the Act (as added by section 4432(b) of the BBA) require a SNF to submit consolidated Medicare bills to its Medicare Administrative Contractor for almost all of the services that its residents receive during the course of a covered Part A stay. In addition, section 1862(a)(18) places the responsibility with the SNF for billing Medicare for physical therapy, occupational therapy, and speech-language pathology services that the resident receives during a noncovered stay. Section 1888(e)(2)(A) of the Act excludes a small list of services from the consolidated billing provision (primarily those services furnished by physicians and certain other types of practitioners), which remain separately billable under Part B when furnished to a SNF's Part A resident. These excluded service categories are discussed in greater detail in section V.B.2. of the May 12, 1998 interim final rule (63 FR 26295 through 26297).

A detailed discussion of the legislative history of the consolidated billing provision is available on the SNF PPS Web site at *http://www.cms.gov/Medicare/Medicare-Fee-for-Service-Payment/SNFPPS/Downloads/Legislative_History_07302013.pdf.* In particular, section 103 of the Medicare, Medicaid, and SCHIP Balanced Budget Refinement Act of 1999 (BBRA) (Pub. L. 106–113, enacted on November 29, 1999) amended section 1888(e)(2)(A) of the Act by further excluding a number of individual high-cost, low probability services, identified by Healthcare Common Procedure Coding System (HCPCS) codes, within several broader categories (chemotherapy items, chemotherapy administration services, radioisotope services, and customized prosthetic devices) that otherwise remained subject to the provision. We discuss this BBRA amendment in greater detail in the SNF PPS proposed and final rules for FY 2001 (65 FR 19231 through 19232, April 10, 2000, and 65 FR 46790 through 46795, July 31, 2000), as well as in Program Memorandum AB–00–18 (Change Request #1070), issued March 2000, which is available online at *www.cms.gov/transmittals/downloads/ab001860.pdf.*

As explained in the FY 2001 proposed rule (65 FR 19232), the amendments enacted in section 103 of the BBRA not only identified for exclusion from this provision a number of particular service codes within four specified categories (that is, chemotherapy items, chemotherapy administration services, radioisotope services, and customized prosthetic devices), but also gave the Secretary the authority to designate additional, individual services for exclusion within each of the specified service categories. In the proposed rule for FY 2001, we also noted that the BBRA Conference report (H.R. Rep. No. 106–479 at 854 (1999) (Conf. Rep.)) characterizes the individual services that this legislation targets for exclusion as high-cost, low probability events that could have devastating financial impacts because their costs far exceed the payment SNFs receive under the prospective payment system. According to the conferees, section 103(a) of the BBRA is an attempt to exclude from the PPS certain services and costly items that are provided infrequently in SNFs. By contrast, we noted that the Congress declined to designate for exclusion any of the remaining services within those four categories (thus, leaving all of those services subject to SNF consolidated billing), because they are relatively inexpensive and are furnished routinely in SNFs.

As we further explained in the final rule for FY 2001 (65 FR 46790), and as our longstanding policy, any additional service codes that we might designate for exclusion under our discretionary authority must meet the same statutory criteria used in identifying the original codes excluded from consolidated billing under section 103(a) of the BBRA: They must fall within one of the four service categories specified in the BBRA; and they also must meet the same standards of high cost and low probability in the SNF setting, as discussed in the BBRA Conference report. Accordingly, we characterized this statutory authority to identify additional service codes for exclusion as essentially affording the flexibility to revise the list of excluded codes in response to changes of major significance that may occur over time (for example, the development of new medical technologies or other advances in the state of medical practice) (65 FR 46791). In this proposed rule, we specifically invite public comments identifying HCPCS codes in any of these four service categories (chemotherapy items, chemotherapy administration services, radioisotope services, and

customized prosthetic devices) representing recent medical advances that might meet our criteria for exclusion from SNF consolidated billing. We may consider excluding a particular service if it meets our criteria for exclusion as specified above. Commenters should identify in their comments the specific HCPCS code that is associated with the service in question, as well as their rationale for requesting that the identified HCPCS code(s) be excluded.

We note that the original BBRA amendment (as well as the implementing regulations) identified a set of excluded services by means of specifying HCPCS codes that were in effect as of a particular date (in that case, as of July 1, 1999). Identifying the excluded services in this manner made it possible for us to utilize program issuances as the vehicle for accomplishing routine updates of the excluded codes, to reflect any minor revisions that might subsequently occur in the coding system itself (for example, the assignment of a different code number to the same service). Accordingly, in the event that we identify through the current rulemaking cycle any new services that would actually represent a substantive change in the scope of the exclusions from SNF consolidated billing, we would identify these additional excluded services by means of the HCPCS codes that are in effect as of a specific date (in this case, as of October 1, 2015). By making any new exclusions in this manner, we could similarly accomplish routine future updates of these additional codes through the issuance of program instructions.

C. Payment for SNF-Level Swing-Bed Services

Section 1883 of the Act permits certain small, rural hospitals to enter into a Medicare swing-bed agreement, under which the hospital can use its beds to provide either acute- or SNF-level care, as needed. For critical access hospitals (CAHs), Part A pays on a reasonable cost basis for SNF-level services furnished under a swing-bed agreement. However, in accordance with section 1888(e)(7) of the Act, these services furnished by non-CAH rural hospitals are paid under the SNF PPS, effective with cost reporting periods beginning on or after July 1, 2002. As explained in the FY 2002 final rule (66 FR 39562), this effective date is consistent with the statutory provision to integrate swing-bed rural hospitals into the SNF PPS by the end of the transition period, June 30, 2002.

Accordingly, all non-CAH swing-bed rural hospitals have now come under the SNF PPS. Therefore, all rates and wage indexes outlined in earlier sections of this proposed rule for the SNF PPS also apply to all non-CAH swing-bed rural hospitals. A complete discussion of assessment schedules, the MDS, and the transmission software (RAVEN–SB for Swing Beds) appears in the FY 2002 final rule (66 FR 39562) and in the FY 2010 final rule (74 FR 40288). As finalized in the FY 2010 SNF PPS final rule (74 FR 40356–57), effective October 1, 2010, non-CAH swing-bed rural hospitals are required to complete an MDS 3.0 swing-bed assessment which is limited to the required demographic, payment, and quality items. The latest changes in the MDS for swing-bed rural hospitals appear on the SNF PPS Web site at *http://www.cms.gov/Medicare/Medicare-Fee-for-Service-Payment/SNFPPS/index.html.*

V. Other Issues

A. Skilled Nursing Facility Value-Based Purchasing Program (SNF VBP Program)

1. Background

a. Overview

In recent years, we have undertaken a number of initiatives to promote higher quality and more efficient health care for Medicare beneficiaries. These initiatives, which include demonstration projects, quality reporting programs, and value-based purchasing programs, have been implemented in various health care settings, including physician offices, ambulatory surgical centers (ASCs), hospitals, nursing homes, home health agencies (HHAs), and dialysis facilities. Many of these programs link a portion of Medicare payments to provider reporting or performance on quality measures. The overarching goal of these initiatives is to transform Medicare from a passive payer of claims to an active purchaser of quality health care for its beneficiaries.

We view value-based purchasing as an important step toward revamping how care is paid for, moving increasingly toward rewarding better value, outcomes, and innovations instead of merely volume.

b. SNF VBP Report to Congress

Section 3006(a) of the Affordable Care Act required the Secretary to develop a plan to implement a value-based purchasing program under the Medicare program for SNFs (as defined in section 1819(a) of the Act) and to submit that plan to Congress. In developing the plan, this section required the Secretary to consider several issues, including the ongoing development, selection, and modification process for measures, the reporting, collection, and validation of quality data, the structure of value-based payment adjustments, methods for public disclosure of SNF performance, and any other issues determined appropriate by the Secretary. The Secretary was also required to consult with relevant affected parties and consider experience with demonstrations relevant to the SNF VBP Program.

HHS submitted the Report to Congress required under section 3006 of the Affordable Care Act in March 2012. The report explains that a significant number of elderly Americans receive care in SNFs/NFs, either as short-term post-acute care or as long-term custodial care, and that quality of care is a significant concern for a subset of SNFs/NFs. The report also states that the SNF PPS does not strongly incentivize SNFs to furnish high quality care to this very fragile patient population. The report concludes that if HHS harnesses the significant and growing purchasing power of Medicare in this sector, it can incentivize SNFs to improve the quality of care for their patients.

In the report, we explained our belief that the implementation of a SNF VBP Program is a central step in revamping Medicare's payments for health care services to reward better value, outcome, and innovations, rather than the volume of care. We also explained our belief that a SNF VBP Program should promote the development and use of robust quality measures, including measures that assess functional status, to promote timely, safe, and high-quality care for Medicare beneficiaries. We noted that the creation of a SNF VBP Program would align with numerous HHS and CMS efforts to improve care coordination, and would be consistent with the National Quality Strategy and its aims of Better Care, Healthy People and Communities, and Affordable Care.

The full report is available on our Web site at *http://www.cms.gov/Medicare/Medicare-Fee-for-Service-Payment/SNFPPS/Downloads/SNF-VBP-RTC.pdf.*

2. Statutory Basis for the SNF VBP Program

Section 215 of PAMA added sections 1888(g) and (h) to the Act. Section 1888(g)(1) of the Act requires the Secretary to specify a skilled nursing facility all-cause all-condition hospital readmission measure (or any successor to such a measure) not later than

October 1, 2015. Section 1888(g)(2) of the Act requires the Secretary to specify an all-condition risk-adjusted potentially preventable hospital readmission rate for SNFs not later than October 1, 2016. Section 1888(g)(3) of the Act directs the Secretary to develop a methodology to achieve high reliability and validity for these measures, especially for SNFs with a low volume of readmissions. Section 1888(g)(4) of the Act makes the pre-rulemaking Measure Applications Partnership process of Section 1890A of the Act optional for these measures. Under section 1888(g)(5) of the Act, the Secretary is directed to provide quarterly confidential feedback reports to SNFs on their performance on the readmission or resource use measure beginning on October 1, 2016. Under section 1888(g)(6) of the Act, not later than October 1, 2017, the Secretary must establish procedures for making performance data on readmission and resource use measures public on *Nursing Home Compare* or a successor Web site. That paragraph also requires that the procedures ensure that a SNF has the opportunity to review and submit corrections to the information that is to be made public for it before that information is made public.

Section 1888(h)(1)(A) of the Act requires the Secretary to establish a SNF value-based purchasing program under which value-based incentive payments are made in a fiscal year to SNFs, and section 1888(h)(1)(B) of the Act requires that the Program apply to payments for services furnished on or after October 1, 2018. Under section 1888(h)(2)(A) of the Act, the Secretary must apply the readmission measure specified under section 1888(g)(1) of the Act for purposes of the Program, and section 1888(h)(1)(B) of the Act requires the Secretary to apply the resource use measure specified under section 1888(g)(2) of the Act instead of the readmission measure specified under section 1888(g)(1) as soon as practicable. Sections 1888(h)(3)(A) and (B) of the Act require the Secretary to establish performance standards for the measure applied under section 1888(h)(2) of the Act for a performance period for a fiscal year and that those performance standards include levels of achievement and improvement. In addition, in calculating the SNF performance score for the measure under the Program, section 1888(h)(3)(B) of the Act requires the Secretary to use the higher of achievement or improvement scores. Further, the performance standards established under section 1888(h)(3) of the Act must, under section 1888(h)(3)(C), be established and announced by the Secretary not later than 60 days prior to the beginning of the performance period for the fiscal year involved.

Section 1888(h)(4) of the Act directs the Secretary to develop a methodology to assess each SNF's total performance based on the performance standards for the applicable measure for each performance period. Under section 1888(h)(4)(B) of the Act, SNF performance scores for the performance period for each fiscal year must be ranked from low to high.

Section 1888(h)(5) of the Act outlines several requirements for value-based incentive payments under the SNF VBP Program. Under section 1888(h)(5)(A) of the Act, the Secretary is directed to increase the adjusted federal per diem rate determined under section 1888(e)(4)(G) for services furnished by a skilled nursing facility by the value-based incentive payment amount determined under section 1888(h)(5)(B). This section also directs that the value-based incentive payment amount be equal to the product of the adjusted federal per diem rate and the value-based incentive payment percentage specified under section 1888(h)(5)(C) of the Act for the SNF for the fiscal year. Section 1888(h)(5)(C) requires the Secretary to specify a value-based incentive payment percentage for a SNF for a fiscal year, which may include a zero percentage. The Secretary is further directed under section 1888(h)(5)(C) to ensure that such percentage is based on the SNF performance score for the performance period for the fiscal year, that the application of all such percentages in a fiscal year results in an appropriate distribution of value-based incentive payments, and that the total amount of value-based incentive payments for all SNFs for a fiscal year be greater than or equal to 50 percent, but not greater than 70 percent, of the total amount of the reductions to payments for the fiscal year under section 1888(h)(6), as estimated by the Secretary.

Section 1888(h)(6) of the Act requires the Secretary to reduce the adjusted federal per diem rate for SNFs otherwise applicable to each SNF for services furnished by that SNF during the applicable fiscal year by the applicable percent, which is defined in paragraph (b) as two percent for FY 2019 and subsequent years. Section 1888(h)(7) of the Act requires the Secretary to inform each SNF of its payment adjustments under the Program not later than 60 days prior to the fiscal year involved, and under section 1888(h)(8) of the Act, the value-based incentive payments calculated for a fiscal year apply only for that fiscal year.

Section 1888(h)(9)(A) of the Act requires the Secretary to publish SNF-specific performance information on the *Nursing Home Compare* Web site or a successor Web site, including SNF performance scores and rankings. Section 1888(h)(9)(B) of the Act requires the Secretary to post aggregate information on the SNF VBP Program, including the range of SNF performance scores and the number of SNFs receiving value-based incentive payments and the range and total amount of those payments.

3. Skilled Nursing Facility 30-Day All-Cause Readmission Measure (SNFRM) (NQF #2510; Measure Steward: CMS)

a. Overview

Reducing hospital readmissions is important for quality of care and patient safety. Readmission to a hospital may be an adverse event for patients and in many cases imposes a financial burden on the health care system. Successful efforts to reduce preventable readmission rates will improve the quality of care furnished to beneficiaries while simultaneously decreasing the cost of that care. Hospitals and other health care providers can work with their communities to lower readmission rates and improve patient care in a number of ways, such as by ensuring that patients are clinically ready to be discharged, reducing infection risk, reconciling medications, improving communication with community providers responsible for post-discharge patient care, improving care transitions, and ensuring that patients understand their care plans upon discharge.

Many studies have demonstrated the effectiveness of these types of in-hospital and post-discharge interventions in reducing the risk of readmission, confirming that hospitals and their partners have the ability to lower readmission rates.[1 2 3] These types of efforts during and after a hospitalization have been shown to be effective in reducing readmission rates

[1] Gwadry-Sridhar FH, Flintoft V, Lee DS, Lee H, Guyatt GH: A systematic review and meta-analysis of studies comparing readmission rates and mortality rates in patients with heart failure. Arch Intern Med. 2004;164(21):2315–2320.

[2] McAlister FA, Lawson FM, Teo KK, Armstrong PW.: A systematic review of randomized trials of disease management programs in heart failure. AmJMed. 2001;110(5):378–384.

[3] Krumholz HM, Amatruda J, Smith GL, et al.: Randomized trial of an education and support intervention to prevent readmission of patients with heart failure. J Am Coll Cardiol. 2002;39(1):83–89.

in geriatric populations generally,[4 5] as well as for multiple specific conditions. Moreover, such interventions can result in cost saving. Financial incentives to reduce readmissions will in turn promote improvement in care transitions and care coordination, as these are important means of reducing preventable readmissions.[6] In its 2007 Report to Congress on Promoting Better Efficiency in Medicare,[7] MedPAC noted the potential benefit to patients of lowering readmissions and suggested payment strategies that would incentivize hospitals to reduce these rates. Readmission rates are important markers of quality of care, particularly of the care of a patient in transition from an acute care setting to a non-acute care setting, and improving readmissions can positively influence patient outcomes and the cost of care.

We are proposing to specify the Skilled Nursing Facility 30-Day All-Cause Readmission Measure (SNFRM) (NQF #2510) as the skilled nursing facility all-cause, all-condition hospital readmission measure under section 1888(g)(1) of the Act. This measure assesses the risk-standardized rate of all-cause, all-condition, unplanned inpatient hospital readmissions of Medicare fee-for-service (FFS) SNF patients within 30 days of discharge from an admission to an inpatient prospective payment system (IPPS) hospital, critical access hospital (CAH), or psychiatric hospital. This measure is claims-based, requiring no additional data collection or submission burden for SNFs.

We are also proposing to apply this measure for purposes of the SNF VBP Program under section 1888(h)(2)(A) of the Act. We believe that this measure will (1) incentivize SNFs to make quality improvements that result in successful transitions of care for patients discharged from the hospital (IPPS, CAH or psychiatric hospital) setting to a SNF, and subsequently to the community or to another post-acute care setting, (2) reduce unplanned readmission rates of these patients to hospitals; and (3) align the SNF VBP Program with the National Quality Strategy priorities of safer, better coordinated care and lower costs.[8]

We developed this measure based upon the NQF-endorsed Hospital-Wide All-Cause Unplanned Readmission Measure (HWR) (NQF #1789) (*http://www.qualityforum.org/QPS/1789*)[9] implemented in the Hospital Inpatient Quality Reporting Program. To the extent methodologically and clinically appropriate, we harmonized the SNFRM with the HWR measure specifications.

b. Measure Calculation

The SNFRM estimates the risk-standardized rate of all-cause, unplanned, hospital readmissions for SNF Medicare FFS beneficiaries within 30 days of discharge from their prior proximal acute hospitalization. The SNF admission must have occurred within one day after discharge from the prior proximal hospitalization. The prior proximal hospitalization is defined as an inpatient admission to an IPPS, CAH, or a psychiatric hospital. Because the measure denominator is based on SNF admissions, each Medicare beneficiary may be included in the measure multiple times within a given year if they have more than one SNF stay meeting all measure inclusion criteria including a prior proximal hospitalization.

Patient readmissions included in the measure are identified by examining Medicare claims data for readmissions of SNF Medicare FFS beneficiaries to an IPPS hospital or CAH occurring within 30 days of discharge from the prior proximal hospitalization. If the patient was admitted to the SNF within 1 day of discharge from the prior proximal hospitalization and the hospital readmission occurred within the 30-day risk window, it is counted in the numerator regardless of whether the patient is readmitted directly from the SNF or has been discharged from the SNF. Because patients differ in complexity and morbidity, the measure is risk-adjusted for patient case-mix. The measure also excludes planned readmissions, because these are not considered to be indicative of poor quality of care by the SNF. Details regarding how readmissions are identified are available in our SNFRM Technical Report.[10]

The SNFRM (NQF # 2510) assesses readmission rates while accounting for patient demographics, principal diagnosis in the prior hospitalization, comorbidities, and other patient factors. While estimating the predictive power of patient characteristics, the model also estimates a facility-specific effect common to patients treated at that SNF.

The SNFRM is calculated based on the ratio, for each SNF, of the number of risk-adjusted all-cause, unplanned readmissions to an IPPS hospital or CAH that occurred within 30 days of discharge from the prior proximal hospitalization, including the estimated facility effect, to the estimated number of risk-adjusted predicted unplanned inpatient hospital readmissions for the same patients treated at the average SNF. A ratio above 1.0 indicates a higher than expected readmission rate, or lower level of quality, while a ratio below 1.0 indicates a lower than expected readmission rate, or higher level of quality. This ratio is referred to as the standardized risk ratio or SRR. The SRR is then multiplied by the overall national raw readmission rate for all SNF stays. The resulting rate is the risk-standardized readmission rate (RSRR). The full methodology is detailed in the SNFRM Technical Report.

The patient population includes SNF patients who:

- Had a prior hospital discharge (IPPS, CAH or psychiatric hospital) within one day of their admission to a SNF.
- Had at least 12 months of Medicare Part A, FFS coverage prior to their discharge date from the prior proximal hospitalization.
- Had Medicare Part A, FFS coverage during the 30 days (the 30-day risk window) following their discharge date from the prior proximal hospitalization.

c. Exclusions

Patients whose prior proximal hospitalization was for the medical treatment for cancer are excluded. Analyses of this population during measure development showed them to have a different trajectory of illness and mortality than other patient populations, which is consistent with

[4] Coleman EA, Parry C, Chalmers S, Min SJ.: The care transitions intervention: Results of a randomized controlled trial. Arch Intern Med. 2006;166:1822–8.

[5] Naylor MD, Brooten D, Campbell R, Jacobsen BS, Mezey MD, Pauly MV, Schwartz JS.: Comprehensive discharge planning and home follow-up of hospitalized elders: A randomized clinical trial. JAMA. 1999;281:613–20. 186

[6] Coleman EA.: 2005. Background Paper on Transitional Care Performance Measurement. Appendix I. In: Institute of Medicine, Performance Measurement: Accelerating Improvement. Washington, DC: National Academy Press.

[7] Medicare Payment Advisory Commission (MedPAC). Report to Congress: Promoting Greater Efficiency in Medicare; 2007. Available at *http://www.medpac.gov/documents/Jun07_EntireReport.pdf*. Accessed January 10, 2011.

[8] Wilson, N. U.S. Department of Health and Human Services, Agency for Healthcare Research and Quality. (2014). National quality strategy: Overview.

[9] Adopted for the Hospital IQR Program in the FY 2013 IPPS/LTCH PPS Final Rule (77 FR 53521 through 53528).

[10] Available on the Nursing Home Quality Initiative Web site at *https://www.cms.gov/Medicare/Quality-nitiatives-Patient-Assessment-Instruments/NursingHomeQualityInits/index.html?redirect=/nursinghomequalityinits/*.

findings in studies in other patient populations.[11]

SNF stays excluded from the measure are:

- SNF stays where the patient had one or more intervening post-acute care (PAC) admissions (inpatient rehabilitation facility (IRF), long-term care hospital (LTCH), or another SNF) which occurred either between the prior proximal hospital discharge and SNF admission (from which the patient was readmitted) or after the SNF discharge but before the readmission, within the 30-day risk window.
- SNF stays with a gap of greater than 1 day between discharge from the prior proximal hospitalization and the SNF admission.
- SNF stays in which the patient was discharged from the SNF against medical advice (AMA).
- SNF stays in which the principal diagnosis for the prior proximal hospitalization was for rehabilitation care; fitting of prostheses and for the adjustment of devices.
- SNF stays in which the prior proximal hospitalization was for pregnancy.
- SNF stays in which data were missing on any variable used in the SNFRM construction.

Readmissions within the 30-day risk window that are usually considered planned due to the nature of the procedures and principal diagnoses of the readmission are also excluded from the measure. In addition to the list of planned procedures is a list of diagnoses (provided in the SNFRM Technical Report), which, if found as the principal diagnosis on the readmission claim, would indicate that the usually planned procedure occurred during an unplanned acute readmission. In addition to the HWR Planned Readmission Algorithm, the SNFRM incorporates procedures that are considered planned in post-acute care settings as identified in consultation with technical expert panels. Full details on the planned readmissions criteria used, including the additional procedures considered planned for post-acute care may be found in the SNFRM Technical Report. Details regarding the TEP proceedings can be found in the SNFRM TEP Report.

d. Eligible Readmissions

An eligible SNF admission is considered to be in the 30-day risk window from the date of discharge from the proximal acute hospitalization until: (1) The 30-day period ends; or (2) the patient is readmitted to an IPPS hospital or CAH. If the readmission is unplanned, it is counted as a readmission in the numerator of the measure. If the readmission is planned, the readmission is not counted in the numerator of the measure. The occurrence of a planned readmission ends further tracking for readmissions in the 30-day risk window.

e. Risk Adjustment

Readmission rates are risk-adjusted for patient case-mix characteristics, independent of quality. The risk adjustment modeling estimates the effects of patient characteristics, comorbidities, and select health status variables on the probability of readmission. More specifically, the risk-adjustment model for SNFs accounts for demographic characteristics (age and sex), principal diagnosis during the prior proximal hospitalization, comorbidities based on the secondary medical diagnoses listed on the patient's prior proximal hospital claim and diagnoses from prior hospitalizations that occurred in the previous 365 days, length of stay during the patient's prior proximal hospitalization, length of stay in the intensive care unit (ICU), body system specific surgical indicators, end-stage renal disease status, whether the patient was disabled, and the number of prior hospitalizations in the previous 365 days.

f. Measurement Period

The SNFRM utilizes 1 year of data to calculate the measure rate. Given that there are more than 2 million Medicare FFS SNF admissions per year in more than 15,000 SNFs, 1 year of data is sufficient to calculate this measure with a model in which the risk adjusters have sufficient sample size to have good precision. The relevant reliability testing may be found in the SNFRM Technical Report.

g. Stakeholder/MAP Input

Our measure development contractor convened a technical expert panel (TEP) which provided input on the technical specifications of this quality measure. The TEP was supportive of the design of this measure. We also solicited stakeholder feedback on the development of this measure through a public comment process from July 15th to 29th, 2013. In December 2014, the NQF endorsed the Skilled Nursing Facility 30-Day All-Cause Readmission Measure (NQF #2510).

We also considered input from the Measures Application Partnership (MAP) when selecting measures under the CMS SNF VBP Program. The MAP is composed of multi-stakeholder groups convened by the NQF, our current contractor under section 1890(a) of the Act. The MAP has noted the need for care transition measures in PAC/Long term care (LTC) performance measurement programs and stated that setting-specific admission and readmission measures under consideration would address this need.[12] We included the SNFRM on the December 1, 2014 List of Measures under Consideration (MUC List), and the MAP supported the measure. A spreadsheet of MAP's 2015 Final Recommendations is available at NQF's Web site at *http://www.qualityforum.org/WorkArea/linkit.aspx?LinkIdentifier=id&ItemID=78711.*

We invite public comment on our proposal to adopt the Skilled Nursing Facility 30-Day All-Cause Readmission Measure (SNFRM) (NQF #2510) for use in the SNF VBP Program.

h. Feedback Reports to SNFs

Section 1888(g)(5) of the Act requires that beginning October 1, 2016, SNFs be provided quarterly confidential feedback reports on their performance on measures specified under sections 1888(g)(1) or (2) of the Act.

We intend to address this topic in future rulemaking. However, we request public comment on the best means by which to communicate these reports to SNFs. For example, we could consider providing confidential, downloadable feedback reports to SNFs through a secure portal, such as QualityNet. We also seek comment on the level of detail that would be most helpful to SNFs in understanding their performance on the new quality measures.

4. Performance Standards

a. Background

Section 1888(h)(3) of the Act requires the Secretary to establish performance standards for the SNF VBP Program. The performance standards must include levels of achievement and improvement, and must be established and announced not later than 60 days prior to the beginning of the performance period for the fiscal year involved. To assist us in developing our proposals to establish performance standards for the SNF VBP program, we reviewed a number of innovative health care programs and demonstration

[11] National Quality Forum. ''Patient Outcomes: All-Cause Readmissions Expedited Review 2011''. July 2012. pp12.

[12] National Quality Forum. *Measure Applications Partnership Pre-Rulemaking Report: 2013 Recommendations of Measures Under Consideration by HHS: February 2013.* Available at *http://www.qualityforum.org/WorkArea/linkit.aspx?LinkIdentifier=id&ItemID=72738.*

projects, both public and private, to discover if any could serve as a prototype for the SNF VBP program. One methodology of important note that provides us an analogous framework for implementation of performance standards is the Performance Assessment Model, implemented for our Hospital VBP program. We also reviewed the Hospital Acquired Conditions Reduction Program, as well as the Hospital Readmissions Reduction Program and the End-Stage Renal Disease Quality Incentive Program (ESRD QIP). We seek comment on several potential approaches for calculating performance standards under the SNF VBP Program.

i. Hospital Value-Based Purchasing Program

Under the Hospital VBP Program, a hospital's Total Performance Score is determined by aggregating and weighting domain scores, which are calculated based on hospital performance on measures within each domain. The domain scores are then weighted to calculate a TPS that ranges between 0 and 100 points. At this time, we do not anticipate proposing to adopt quality measurement domains akin to other CMS quality programs under the SNF VBP Program due to fact that this program is based on only one measure.

To calculate HVBP measure scores, hospital performance on specified quality measures is compared to performance standards established by the Secretary. These performance standards include levels of achievement and improvement and enable us to award between 0 and 10 points to each hospital based on its performance on each measure during the performance period. An achievement threshold, generally defined as the median of all hospital performance on most measures during a specified baseline period, is the minimum level of performance required to receive achievement points. The benchmark, generally defined as the mean of the top decile of all hospital performance on a measure during the baseline period, is the performance level required for receiving the maximum number of points on a given measure. The Program also establishes an improvement threshold for each measure, set at each individual hospital's performance on the measure during the baseline period, to award points for improvement over time.

We believe that the Hospital VBP Program's performance standards methodology is a well-understood methodology under which health care providers and suppliers can be rewarded both for providing high-quality care and for improving their performance over time. The statutory authority for the Hospital VBP Program is structured similarly to the statutory authority for the SNF VBP Program, and we are considering adoption of a similar methodology for establishing performance standards under the SNF VBP Program. We also seek to align our pay-for-performance and quality reporting programs as much as possible. Specifically, we could consider adopting performance standards based on all SNF performance during the baseline period on the measure specified under section 1888(g)(1) or (2) of the Act in the form of the achievement threshold—median of all SNF performance during a baseline period—and the benchmark—mean of the top decile of all SNF performance during a baseline period. We could then consider awarding points along a continuum relative to those performance levels.

ii. Hospital-Acquired Conditions Reduction Program

We also considered whether we should adopt any components of the scoring methodology that we have finalized for the HAC Reduction Program under the SNF VBP Program. The HAC Reduction Program requires the Secretary to reduce eligible hospitals' Medicare payments to 99 percent of what would otherwise have been paid for discharges when hospitals rank in the worst performing quartile for risk-adjusted HAC quality measures. These quality measures comprise efforts to promote quality of care by reducing the number of HACs in the acute inpatient hospital setting.

We determine a hospital's Total HAC Score by first assigning each hospital a score of between 1 and 10 for each measure based on the hospital's relative performance ranking in 10 groups (or deciles) for that measure. Second, the measure score is used to calculate the domain score. We discuss other details of the HAC Reduction Program's scoring methodology in further detail below.

Although the HACRP statutory authority is not structured the same as the SNF VBP statutory authority, we view the HACRP's use of decile-based performance standards as one conceptual possibility for constructing performance standards under the SNF VBP Program. Specifically, we could consider setting performance standards based on SNFs' ranked performance on the measures specified under sections 1888(g)(1) or (2) of the Act during the performance period. We could divide SNFs' performance on the measures into deciles and award between 1 and 10 points to all SNFs within each decile. While this type of performance standards calculation would measure and reward achievement, we are concerned that it would not incorporate improvement, and we seek comment on the best means by which we could include improvement in this type of calculation.

iii. Hospital Readmissions Reduction Program (HRRP)

We also considered aspects of the Hospital Readmissions Reduction Program (HRRP) for adaptation under the SNF VBP Program. HRRP reduces Medicare payments to hospitals with a higher number of readmissions for applicable conditions over a specified time period.

Hospital readmissions are defined as Medicare patients that are readmitted to the same or another hospital within 30 days of a discharge from the same or another hospital, which includes short-term inpatient acute care hospitals. The initial hospital inpatient admission (the discharge from which starts the 30-day potential penalty clock) is termed the index admission. The hospital inpatient readmission (which can be used to determine application of a penalty if the readmission occurs within 30 days of the index inpatient admission stay) can be for any cause, that is, it does not have to be for the same cause as the index admission.

Using historical data, we determine whether eligible IPPS hospitals have readmission rates that are higher than expected, given the hospital's case mix, while accounting for the patient risk factors, including age, and chronic medical conditions identified from inpatient and outpatient claims for the 12 months prior to the hospitalization. A hospital's excess readmission ratio for each condition is a measure of a hospital's readmission performance compared to the national average for the hospital's set of patients with that applicable condition. If the hospital's actual readmission rate, based on the hospital's actual performance, for the year is greater than its CMS-expected readmission rate, the hospital incurs a penalty up to the maximum cap. If a hospital performs better than an average hospital that admitted similar patients, the hospital will not be subjected to a payment reduction. If a hospital performs worse than average (below a 1.000 score), the poorer performance triggers a payment reduction. For FY 2013, the reduction was capped at 1 percent, for FY 2014 at 2 percent, and at 3 percent for FY 2015 and for subsequent years.

We view the Hospital Readmissions Reduction Program as a potential model for the SNF VBP Program because that program does not weight scores based on domains. That is, under the HRRP, hospitals' risk-adjusted readmissions ratios form the basis for Medicare payment adjustments. Under SNF VBP (and as discussed further in this section), the Program's statute requires us to select only one measure to form the basis for the SNF Performance Score. We believe that this conceptual similarity stands distinct from certain other CMS quality programs that incorporate quality measurement domains and domain weighting into the scoring calculations. However, the HRRP sets an effective performance standard based on the average readmissions adjustment factor of 1.000. We seek comment on whether or not we should adopt a similar form of performance standard under the SNF VBP Program. This performance standard could take the form of the median or mean performance on the specified quality measure during the performance period. However, we believe we would also need to consider more granular delineations in SNF scoring to ensure an appropriate distribution of value-based incentive payments under the Program, and we seek comment on what additional policies we should consider adopting in this topic area.

iv. End-Stage Renal Disease Quality Incentive Program (ESRD QIP)

The End-Stage Renal Disease Quality Incentive Program (ESRD QIP) is authorized by section 1881(h) of the Act. The program promotes patient health by providing a financial incentive for renal dialysis facilities to deliver high-quality care to their patients.

Section 1881(h)(3)(A)(i) of the Act requires the Secretary to develop a methodology for assessing the total performance of each provider and facility based on performance standards. For each clinical measure adopted under the ESRD QIP, we assess performance on both achievement and improvement. For the achievement score, facility performance on a measure during a performance period is compared against national facility performance on that measure during a specified baseline period. To calculate the improvement score, we compare a facility's performance during the performance period to its performance during a specified baseline period. In determining a clinical measure score for each measure, we take the higher of the improvement or achievement score.

For each reporting measure, we assess performance based on whether the facility completed the reporting for that measure as specified. If a facility reports data according to the specifications we have adopted, then the facility earns the maximum number of points on the measure. If the facility partially reports data according to the specifications we have adopted, the hospital earns some points on the measure, but less than the maximum.

We believe that the ESRD QIP performance standards methodology is a well-understood methodology under which health care providers and suppliers can be rewarded both for providing high-quality care and for improving their performance over time. The scoring methodology rewards achievement and improvement, and is generally aligned with other pay-for-performance and quality reporting programs. Like the Hospital VBP Program statutory language, the ESRD QIP statutory language is structured similar to the SNF VBP Program statutory language, and we are considering adoption of a similar methodology for calculating performance standards under the SNF VBP Program. Specifically, we could consider adopting performance standards based on all SNF performance during the baseline period on the measure specified under sections 1888(g)(1) or (2) of the Act in the forms of the achievement threshold—median of all SNF performance—and the benchmark—mean of the top decile of all SNF performance. We could then consider awarding points for those performance levels.

b. Measuring Improvement

We are considering several methodologies for improvement scoring under the SNF VBP Program, and we welcome public comments on these options or others that we should consider as we develop our SNF VBP Program policies for future rulemaking.

Section 1888(h)(4)(B) of the Act specifically requires us to construct a ranking of SNF performance scores. While we view such a ranking system as fairly straightforward when based on achievement scoring—for example, ranking SNFs based on their performance on a measure during the performance period could be achieved by ordering SNF performance rates on the measure specified for the Program year—we are considering several approaches for including improvement in the SNF scoring methodology because we are limited to one measure for each SNF Program year. These approaches include:

- Improvement points, awarded using a similar methodology as the one we use to award improvement points in the Hospital VBP Program.
- Measure rate increases, in which a SNF's performance rate on a measure would be increased as a result of its improvement over time.
- Ranking increases, in which a SNF's ranking relative to other SNFs would be increased as a result of improvement.
- Performance score increases, in which a SNF's performance score would be increased as a result of improvement.

We discuss each of these options in further detail below.

i. Improvement Points

The Hospital VBP Program calculates both achievement and improvement points for participating hospitals with sufficient data on each measure adopted under the Program, and the score a hospital receives on a measure is the higher of the achievement and improvement score. We could consider adopting a similar methodology under the SNF VBP Program, in which points would be calculated for SNFs for both achievement (in comparison to all SNFs during the performance period) and for improvement (in comparison to that individual SNF's performance during the baseline period). Points awarded could be, similar to the HVBP Program, between 0 and 10 points, or we could consider awarding points on a broader range, such as from 0 to 50, or 0 to 100.

We believe that adapting the Hospital VBP Program's performance standards methodology presents certain advantages, in that it is well understood by the public and reflects a fair means to fulfill the statutory requirement at section 1888(h)(3)(B) of the Act to include both achievement and improvement. However, since there is only one measure in the SNF VBP Program, such a policy could result in significant differences in SNF value-based incentive payments between SNFs with relatively small differences in measured performance. We seek comment on whether or not we should adopt improvement points in a similar form to that which we have adopted for the Hospital VBP Program.

ii. Measure Rate Increases

Given the limited number of measures that we may select for the SNF VBP Program, we are considering whether we should include improvement in the program by way of increasing a SNF's performance rate on the Program's measure by a certain amount. Such a measure rate increase could take several forms, and could rely on any number of

qualifying criteria. For example, an increase of 10 percent of measured performance could be awarded to any SNF's measure rate that rises between the baseline and performance periods. We could also consider limiting this increase to SNFs whose improvement on the Program's measure placed them in the top 50 percent of improving SNFs between the baseline and performance period. Additionally, we could consider incorporating a penalty into the scoring methodology if a SNF's performance on the measure selected under the Program should decline significantly, and we seek comment on whether or not we should consider such a policy.

However, we are concerned about the methodological implications to quality measurement of awarding increases in measured performance rates to recognize improvement. We understand that quality measures are developed with robust considerations for the clinical topic covered, the recommended care provided, and in many cases, for the health of the underlying patient population, and we seek comment on whether such an adjustment would be methodologically sound.

iii. Ranking Increases

Another possibility for rewarding improvement is to adopt certain elements of the Hospital VBP Program's scoring methodology—that is, 0 to 10 points for measured performance—and increase a SNF's relative placement as a result of improvement. Under this type of scenario, SNF performance would be rank-ordered, and each SNF would be placed in a cohort numbered from 0 to 10, which would correspond to the points that would be awarded to that SNF for achievement along a 0 to 10 point scale of SNF performance scores based on their measured performance. Once SNF performance has been ranked from 0 to 10, we could consider increasing SNFs' ranking, and basing value-based incentive payments under the program on the resulting adjusted ranking. For example, a SNF whose performance on a measure resulted in a score of 3 on the 0 to 10 point scale, but whose performance improved, could have its score increased to 4. We could also consider limiting this increase to only those SNFs whose improvement places them in the top 50 percent of improving SNFs between the baseline and performance period.

However, we are concerned that this type of ranking may not provide us with enough granularity to meaningfully differentiate performance between groups of SNFs, and may result in substantial differences in value-based incentive payments between SNFs with relatively small differences in measured performance. We are also concerned about comparability once this type of ranking increase has been performed, because comparing two SNFs that both ended at a given point on the 0 to 10 scale may not be meaningful if one of them reached that point via improvement. Because we are limited in the number of measures that we may adopt, we believe that we may need to consider adopting a scoring methodology that allows additional granularity to capture improvement appropriately. We seek comment on this issue.

iv. Performance Score Increases

This option is a variation on the HVBP improvement points scenario described further above. Under this option, we would construct SNF performance scores based on measured performance during the performance period, and would award an increased performance score to SNFs whose measured performance rose between the baseline and performance periods. This option could take the form of a percentage-based increase—such as a 25 percent increase to a SNF performance score if the SNF improved over time—and could also be limited to top improvers, as described above in reference to other options.

This option would not result in direct adjustments to quality measure rates. We would instead be adjusting the SNF performance score, and given the broad authority that the SNF VBP statute provides us in calculating the SNF performance score, we believe this option be to operationally feasible. However, we remain concerned about the challenges associated with comparability between SNFs with different performance rates on the measure but the same SNF performance score. We specifically seek comment on how, if at all, we should differentiate SNFs' performance scores when based on achievement or improvement to address this issue.

5. FY 2019 Performance Period and Baseline Period Considerations

a. Performance Period

We intend to specify a performance period for a payment year with an end date as close as feasibly possible to the payment year's start date. We strive to link performance furnished by SNFs as closely as possible to the payment year to ensure clear connections between quality measurement and value-based payment. We also strive to measure performance using a sufficiently reliable population of patients that broadly represent the total care provided by SNFs. As such, we anticipate that our annual performance period end date must provide sufficient time for SNFs to submit claims for the patients included in our measure population. In other programs, such as HRRP and the Hospital Inpatient Quality Reporting Program (HIQR), this time lag between care delivered to patients who are included in the readmission measures and application of a payment consequence linked to reporting or performance on those measures has historically been close to one year. We also recognize that other factors contribute to this time lag, including the processing time we need to calculate measure rates using multiple sources of claims needed for statistical modeling, time for providers to review their measure rates and included patients, and processing time we need to determine whether a payment adjustment needs to be made to a provider's reimbursement rate under the applicable PPS based on its reporting or performance on measures.

For the FY 2019 SNF VBP Program's performance period, we are also considering the necessary timeline we need to complete measure scoring to announce the net result of the Program's adjustments to Medicare payments not later than 60 days prior to the fiscal year, in accordance with section 1888(h)(7) of the Act. We are also considering the number of SNF stays typically covered by Medicare each year. As discussed previously, Medicare typically covers more than two million Medicare Part A stays per year in more than 15,000 SNFs, and we therefore believe that one year of SNFRM data is sufficient to ensure that the measure rates are statistically reliable.

We intend to propose a performance period for the FY 2019 SNF VBP Program in future rulemaking. However, we seek public comment on the most appropriate performance period length.

b. Baseline Period

As described previously, in other Medicare quality programs such as the Hospital Value-Based Purchasing Program and the End-Stage Renal Disease Quality Incentive Program, we generally adopt a baseline period that occurs prior to the performance period for a fiscal year to measure improvement and establish performance standards.

We view the SNF VBP Program as necessitating a similarly-adopted baseline period for each fiscal year to measure improvement (as required by section 1888(h)(3)(B) of the Act) and to

enable us to calculate performance standards that we must establish and announce prior to the performance period (as required by section 1888(h)(3)(A) of the Act). As with the Hospital VBP Program, we intend to adopt baseline periods that are as close as possible in duration as the performance period specified for a fiscal year. However, we may occasionally need to adopt a baseline period that is shorter than the performance period to meet operational timelines. We also intend to adopt baseline periods that are seasonally aligned with the performance periods to avoid any effects on quality measurement that may result from tracking SNF performance during different times of the calendar year.

We intend to propose a baseline period for purposes of calculating performance standards and measuring improvement in future rulemaking. We seek public comment on the most appropriate baseline period for the FY 2019 Program, including what considerations we should take into account when developing this policy for future rulemaking.

6. SNF Performance Scoring

a. Considerations

As with our performance standards policy considerations described above, we considered how other Medicare quality programs score eligible facilities. Specifically, we considered how the Hospital Value-Based Purchasing Program and the Hospital-Acquired Conditions Reduction Program score eligible hospitals. We discussed the Hospital Readmissions Reduction Program's scoring above in relation to performance standards.

i. Hospital Value-Based Purchasing

A Hospital VBP domain score is calculated by combining the measure scores within that domain, weighting each measure equally. The domain score reflects the number of points the hospital has earned based on its performance on the measures within that domain for which it is eligible to receive a score. After summing the weighted domain scores, the TPS is translated using a linear exchange function into the percentage multiplier to be applied to each Medicare discharge claim submitted by the hospital during the applicable fiscal year. (We discuss the Exchange Function in further detail below).

Unlike the Hospital VBP Program, the SNF VBP program focuses on a single readmission measure, one that will be replaced by a single resource use measure as soon as is practicable. As described above, we do not anticipate adopting quality measure domains akin to other CMS quality programs under the SNF VBP Program. We therefore seek comment on how, if at all, we should adapt the HVBP Program's scoring methodology to accommodate both the smaller number of measures and the ranking required under the SNF VBP Program.

ii. Hospital-Acquired Conditions Reduction Program

The Hospital-Acquired Conditions (HAC) Reduction Program scores measures that have been categorized into domains, in a manner that is similar to the HVBP Program's domain structure. For Domain 1, the points awarded to the single assigned measure yield the Domain 1 score, since Domain 1 only contains one measure. For Domain 2, the points awarded for the domain measures are averaged to yield a Domain 2 score. A hospital's Total HAC Score is determined by the sum of weighted Domain 1 and Domain 2 scores. Higher scores indicate worse performance relative to the performance of all other eligible hospitals. Hospitals with a Total HAC Score above the 75th percentile of the Total HAC Score distribution are subject to a payment reduction.

Unlike the Hospital VBP program, referenced above, there is no requirement in the HAC Reduction Program that measures or performance standards must incorporate improvement and achievement scores. As with the HVBP Program above, we seek public comments on the extent to which, if at all, we should adopt components of the HAC Reduction Program's scoring methodology for purposes of the SNF VBP Program. We specifically seek comment on whether or not we should set an absolute level of performance that must be reached to receive a positive SNF value-based incentive payment.

iii. Other Considerations

We intend to consider several additional factors when developing the performance scoring methodology. We believe that it is important to ensure that the performance scoring methodology is straightforward and transparent to SNFs, patients, and other stakeholders. SNFs must be able to clearly understand performance scoring methods and performance expectations to maximize their quality improvement efforts. The public must understand the scoring methodology to make the best use of the publicly reported information when choosing a SNF. We also believe that scoring methodologies for all Medicare value-based purchasing programs should be aligned as appropriate given their specific statutory requirements. This alignment will facilitate the public's understanding of quality information disseminated in these programs and foster more informed consumer decision making about health care. We believe that differences in performance scores must reflect true differences in performance. To ensure that these beliefs are appropriately reflected in the SNF VBP Program, we intend to assess the quantitative characteristics of the measures specified under sections 1888(g)(1) and (2) of the Act, including the current state of measure development, to ensure an appropriate distribution of value-based incentive payments as required by the SNF VBP statute.

We seek public comment on what other considerations we should take into account when developing our proposed scoring methodology for the SNF VBP Program in future rulemaking.

b. Notification Procedures

As described above, we intend to address the topic of quarterly feedback reports to SNFs related to measures specified under sections 1888(g)(1) and (2) of the Act in future rulemaking. We also intend to address how to notify SNFs of the adjustments to their PPS payments based on their performance scores and ranking under the SNF VBP Program, in accordance with the requirement in section 1888(h)(7) of the Act, in future rulemaking.

However, we seek public comment on the best means by which to so notify SNFs.

c. Exchange Function

As described above in reference to the Hospital VBP Program's scoring methodology, we use a linear exchange function to translate a hospital's Total Performance Score under that Program into the percentage multiplier to be applied to each Medicare discharge claim submitted by the hospital during the applicable fiscal year. We refer readers to the Hospital Inpatient VBP Program Final Rule (76 FR 26531 through 26534) for detailed discussion of the Hospital VBP Program's Exchange Function, as well as responses to public comments on this issue.

We believe we could consider adopting a similar exchange function methodology to translate SNF performance scores into value-based incentive payments under the SNF VBP Program, and we seek comment on whether or not we should do so. However, as we did for the Hospital

VBP Program, we believe we would need to consider the appropriate form and slope of the exchange function to determine how best to reward high performance and encourage SNFs to improve the quality of care provided to Medicare beneficiaries. As illustrated in figure 1, we could consider the following four mathematical exchange function options: Straight line (linear); concave curve (cube root function); convex curve (cube function); and S-shape (logistic function), and we seek comment on what form of the exchange function we should consider implementing if we adopt such a function under the SNF VBP Program.

Figure 1. Exchange Function Options.

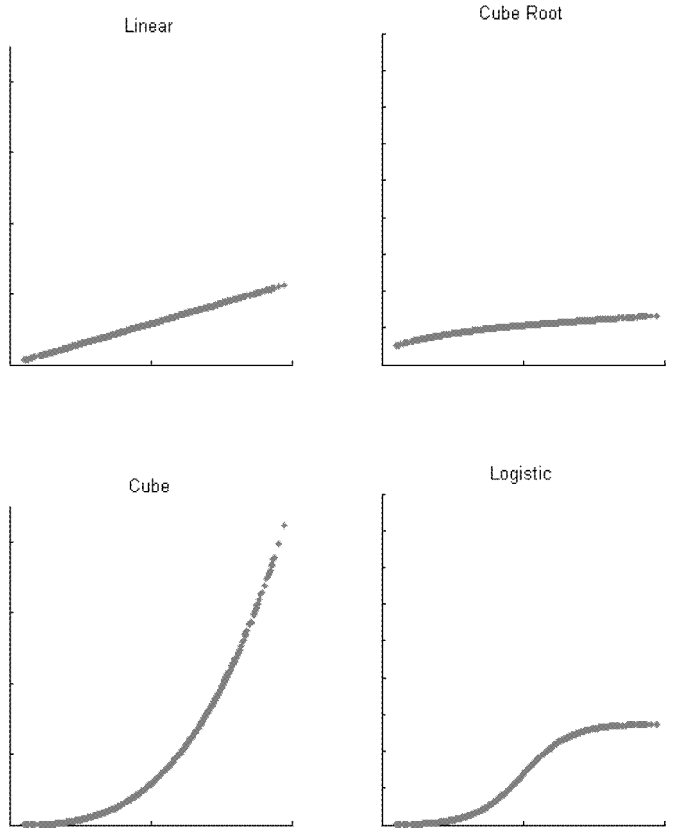

We also seek comment on what considerations we should take into account when determining the appropriate form of the exchange function under the SNF VBP Program. We intend to consider how such options would distribute the value-based incentive payments among SNFs, the potential differences between the value-based incentive payment amounts for SNFs that perform poorly and SNFs that perform very well, the different marginal incentives created by the different exchange function slopes, and the relative importance of having the exchange function be as simple and straightforward as possible. We request public comments on what additional considerations, if any, we should take into account.

7. SNF Value-Based Incentive Payments

Sections 1888(h)(5) and (6) of the Act outline several requirements for value-based incentive payments under the SNF VBP Program, including the value-based incentive payment percentage that must be determined for each SNF and the funding available for value-based incentive payments.

We intend to address this topic in future rulemaking.

8. SNF VBP Public Reporting

a. SNF-Specific Performance Information

Section 1888(h)(9)(A) of the Act requires the Secretary to post information on the performance of individual SNFs under the SNF VBP Program on the *Nursing Home Compare* Web site or its successor. This information is to include the SNF performance score for the facility for the applicable fiscal year and the SNF's ranking for the performance period for such fiscal year.

We intend to address this topic in future rulemaking. However, we seek public comment on how we should display this SNF-specific performance information, whether or not we should allow SNFs an opportunity to review and correct the SNF-specific performance information that we will post on *Nursing Home Compare,* and how such a review and correction process should operate.

b. Aggregate Performance Information

Section 1888(h)(9)(B) of the Act requires the Secretary to post aggregate information on the SNF VBP Program on the *Nursing Home Compare* Web site, or a successor Web site, to include the range of SNF performance scores and the number of SNFs that received value-based incentive payments and the range and total amount of such value-based incentive payments.

We intend to address this topic in future rulemaking. However, we seek public comment on the most appropriate form for posting this

aggregate information to make such information easily understandable for the public.

B. Advancing Health Information Exchange

HHS has a number of initiatives designed to encourage and support the adoption of health information technology and to promote nationwide health information exchange to improve health care. As discussed in the August 2013 Statement ''Principles and Strategies for Accelerating Health Information Exchange'' (available at *http://www.healthit.gov/sites/default/files/acceleratinghieprinciples_strategy.pdf*), HHS believes that all individuals, their families, their healthcare and social service providers, and payers should have consistent and timely access to health information in a standardized format that can be securely exchanged between the patient, providers, and others involved in the individual's care. Health IT that facilitates the secure, efficient and effective sharing and use of health-related information when and where it is needed is an important tool for settings across the continuum of care, including SNFs and NFs. While these facilities are not eligible for the Medicare and Medicaid EHR Incentive Programs, effective adoption and use of health information exchange and health IT tools will be essential as these settings seek to improve quality and lower costs through initiatives such as value-based purchasing.

The Office of the National Coordinator for Health Information Technology (ONC) has released a document entitled ''Connecting Health and Care for the Nation: A Shared Nationwide Interoperability Roadmap Draft Version 1.0 (draft Roadmap) (available at *http://www.healthit.gov/sites/default/files/nationwide-interoperability-roadmap-draft-version-1.0.pdf*) which describes barriers to interoperability across the current health IT landscape, the desired future state that the industry believes will be necessary to enable a learning health system, and a suggested path for moving from the current state to the desired future state. In the near term, the draft Roadmap focuses on actions that will enable a majority of individuals and providers across the care continuum to send, receive, find and use a common set of electronic clinical information at the nationwide level by the end of 2017. The Roadmap's goals also align with the IMPACT Act of 2014 which requires assessment data to be standardized and interoperable to allow for exchange of the data. Moreover, the vision described in the draft Roadmap significantly expands the types of electronic health information, information sources and information users well beyond clinical information derived from electronic health records (EHRs). This shared strategy is intended to reflect important actions that both public and private sector stakeholders can take to enable nationwide interoperability of electronic health information such as: (1) Establishing a coordinated governance framework and process for nationwide health IT interoperability; (2) improving technical standards and implementation guidance for sharing and using a common clinical data set; (3) enhancing incentives for sharing electronic health information according to common technical standards, starting with a common clinical data set; and (4) clarifying privacy and security requirements that enable interoperability.

In addition, ONC has released the draft version of the 2015 Interoperability Standards Advisory (available at *http://www.healthit.gov/standards-advisory*), which provides a list of the best available standards and implementation specifications to enable priority health information exchange functions. Providers, payers, and vendors are encouraged to take these ''best available standards'' into account as they implement interoperable health information exchange across the continuum of care, including care settings such as behavioral health, long-term and post-acute care, and home and community-based service providers.

We encourage stakeholders to utilize health information exchange and certified health IT to effectively and efficiently help providers improve internal care delivery practices, support management of care across the continuum, enable the reporting of electronically specified clinical quality measures (eCQMs), and improve efficiencies and reduce unnecessary costs. As adoption of certified health IT increases and interoperability standards continue to mature, HHS will seek to reinforce standards through relevant policies and programs.

C. Skilled Nursing Facility (SNF) Quality Reporting Program (QRP)

1. Background and Statutory Authority

We seek to promote higher quality and more efficient health care for Medicare beneficiaries, and our efforts are furthered by quality reporting programs coupled with public reporting of that information. Such quality reporting programs already exist for various settings such as the Hospital Inpatient Quality Reporting (HIQR) Program, the Hospital Outpatient Quality Reporting (HOQR) Program, the Physician Quality Reporting System, the Long-Term Care Hospital (LTCH) Quality Reporting Program (QRP), the Inpatient Rehabilitation Facility (IRF) Quality Reporting Program (QRP), the Home Health Quality Reporting Program (HHQRP), and the Hospice Quality Reporting Program (HQRP). We have also implemented quality reporting programs for home health agencies (HHAs) that are based on conditions of participation, and an End-Stage Renal Disease (ESRD) Quality Incentive Program (QIP) and a Hospital Value-Based Purchasing (HVBP) Program that link payment to performance.

SNFs are providers that meet conditions of participation for Medicare. Some SNFs are also certified under Medicaid as nursing facilities, and these types of long-term care facilities furnish services to both Medicare beneficiaries and Medicaid enrollees. SNFs provide short-term skilled nursing services, including but not limited to rehabilitative therapy, physical therapy, occupational therapy, and speech-language pathology services. Such services are provided to beneficiaries who are recovering from surgical procedures, such as hip and knee replacements, or from medical conditions, such as stroke and pneumonia. SNF services are provided when needed to maintain or improve a beneficiary's current condition, or to prevent a condition from worsening. The care provided in a SNF (as a free-standing facility or part of a hospital), is aimed at enabling the beneficiary to maintain or improve his/her health and to function independently. SNF care is a benefit under Medicare Part A and such care is covered for up to 100 days in a benefit period if all coverage requirements are met.[13] In 2014, 2.6 million covered stays occurred within 15,421 SNFs.

Section 1888(e)(6)(B)(i)(II) of the Act requires that each SNF submit, for fiscal years (FYs) beginning on or after the specified application date (as defined in section 1899B(a)(2)(E) of the Act), data on quality measures specified under section 1899B(c)(1) of the Act and data on resource use and other measures specified under section 1899B(d)(1) of the Act in a manner and within the timeframes specified by the Secretary. In addition, section 1888(e)(6)(B)(i)(III) of the Act requires, for FYs beginning on or after October 1, 2018, that each SNF

[13] Section 1812(a)(2) and (b)(2) of the Social Security Act; 42 CFR 409.61; *http://www.medicare.gov/Pubs/pdf/10153.pdf.*

submit standardized patient assessment data required under section 1899B(b)(1) of the Act in a manner and within the timeframes specified by the Secretary. Section 1888(e)(6)(A)(i) of the Act requires that, for FYs beginning with FY 2018, if a SNF does not submit data, as applicable, on quality and resource use and other measures in accordance with section 1888(e)(6)(B)(i)(II) of the Act and standardized patient assessment in accordance with section 1888(e)(6)(B)(i)(III) of the Act for such FY, the Secretary reduce the market basket percentage described in section 1888(e)(5)(B)(ii) of the Act by 2 percentage points.

The IMPACT Act adds section 1899B to the Act that imposes new data reporting requirements for certain PAC providers, including SNFs. Sections 1899B(c)(1) and 1899B(d)(1) of the Act collectively require that the Secretary specify quality measures and resource use and other measures with respect to certain domains not later than the specified application date that applies to each measure domain and PAC provider setting. Section 1899B(a)(2)(E) of the Act delineates the specified application dates for each measure domain and PAC provider. The IMPACT Act also added section 1886(e)(6) to the Act, to require the Secretary to reduce the otherwise applicable PPS payment to a SNF that does not report the new data in a form and manner, and at a time, specified by the Secretary. For SNFs, new section 1886(e)(6)(A)(i) of the Act would require the Secretary to reduce the payment update for any SNF that does not satisfactorily submit the new required data.

Under the SNF QRP, we are proposing that the general timeline and sequencing of measure implementation would occur as follows: Specification of measures; proposal and finalization of measures through notice-and-comment rulemaking; SNF submission of data on the adopted measures; analysis and processing of the submitted data; notification to SNFs regarding their quality reporting compliance with respect to a particular fiscal year; consideration of any reconsideration requests; and imposition of a payment reduction in a particular fiscal year for failure to satisfactorily submit data with respect to that fiscal year. We are also proposing that any payment reductions that are taken with respect to a fiscal would year begin approximately one year after the end of the data submission period for that fiscal year and approximately two years after we first adopt the measure.

This timeline, which is followed in the other quality reporting programs, reflects operational and other practical constraints, including the time needed to specify and adopt valid and reliable measures, collect the data, and determine whether a SNF has complied with our quality reporting requirements. It also takes into consideration our desire to give SNFs enough notice of new data reporting obligations so that they are prepared to timely start reporting the data. Therefore, we intend to follow the same timing and sequence of events for measures specified under section 1899B(c)(1) and (d)(1) of the Act that we currently follow for the other quality reporting programs. We intend to specify each of these measures no later than the specified application dates set forth in section 1899B(a)(2)(E) of the Act and propose to adopt them consistent with the requirements in the Act and Administrative Procedure Act. To the extent that we finalize a proposal to adopt a measure for the SNF QRP that satisfies an IMPACT Act measure domain, we intend to require SNFs to report data on the measure for the fiscal year that begins 2 years after the specified application date for that measure. Likewise, we intend to require SNFs to begin reporting any other data specifically required under the IMPACT Act for the fiscal year that begins 2 years after we adopt requirements that would govern the submission of that data.

As provided at section 1888(e)(6)(A)(ii) of the Act, depending on the market basket percentage for a particular year, the 2 percentage point reduction under section 1888(e)(6)(A)(i) of the Act may result in this percentage, after application of the productivity adjustment under section 1888(e)(5)(B)(ii) of the Act, being less than 0.0 percent for a FY and may result in payment rates under the SNF PPS being less than payment rates for the preceding FY. In addition, as set forth at section 1888(e)(6)(A)(iii) of the Act, any reduction based on failure to comply with the SNF QRP reporting requirements applies only to the particular FY involved, and any such reduction must not be taken into account in computing the SNF PPS payment rates for subsequent FYs.

For purposes of meeting the reporting requirements under the SNF QRP, section 1888(e)(6)(B)(ii) of the Act states that SNFs (or other facilities described in section 1888(e)(7)(B) of the Act, other than a CAH) may submit the resident assessment data required under section 1819(b)(3) of the Act using the standard instrument designated by the state under section 1819(e)(5) of the Act. Currently, the resident assessment instrument is titled the MDS 3.0. To the extent data required for submission under subclause (II) or (III) of section 1888(e)(6)(B)(i) of the Act duplicates other data required to be submitted under clause (i)(I), section 1888(e)(6)(B)(iii) provides that the submission of data under subclause (II) or (III) is to be in lieu of the submission of such data under clause (I), unless the Secretary makes a determination that such duplication is necessary to avoid delay in the implementation of section 1899B of the Act taking into account the different specified application dates under section 1899B(a)(2)(E) of the Act.

In addition to requiring a quality reporting program for SNFs under new section 1888(e)(6), the IMPACT Act requires feedback to SNFs and public reporting of their performance. More specifically, section 1899B(f)(1) of the Act requires the Secretary to provide confidential feedback reports to SNFs on their performance on the quality measures and resource use and other measures specified under that section. The Secretary must make such confidential feedback reports available to SNFs beginning one year after the specified application date that applies to the measures in that section and, to the extent feasible, no less frequently than on a quarterly basis, except in the case of measures reported on an annual basis, as to which the confidential feedback reports may be made available annually.

Section 1899B(g)(1) of the Act requires the Secretary to provide for the public reporting of SNF performance on the quality measures specified under section 1899B(c)(1) of the Act and the resource use and other measures specified under section 1899B(d)(1) of the Act by establishing procedures for making the performance data available to the public. Such procedures must ensure, including through a process consistent with the process applied under section 1886(b)(3)(B)(viii)(VII) of the Act, that SNFs have the opportunity to review and submit corrections to the data and other information before it is made public as required by section 1899B(g)(2) of the Act. Section 1899B(g)(3) of the Act requires that the data and information is made publicly available beginning no later than two years after the specified application date applicable to such a measure and SNFs. Finally, section 1899B(g)(4)(B) of the Act requires that such procedures must provide that the data and information described in section 1899B(g)(1) of the Act with respect to quality and resource use measures be made publicly available consistent with sections 1819(i) and 1919(i) of the Act.

2. General Considerations Used for Selection of Quality Measures for the SNF QRP

We strive to promote high quality and efficiency in the delivery of health care to the beneficiaries we serve. Performance improvement leading to the highest quality health care requires continuous evaluation to identify and address performance gaps and reduce the unintended consequences that may arise in treating a large, vulnerable, and aging population. Quality reporting programs, coupled with public reporting of quality information, are critical to the advancement of health care quality improvement efforts.

Valid, reliable, relevant quality measures are fundamental to the effectiveness of our quality reporting programs. Therefore, selection of quality measures is a priority for CMS in all of its quality reporting programs.

We are proposing to adopt for the SNF QRP three measures that we are specifying under section 1899(B)(c)(1) of the Act for purposes of meeting the following three domains: Functional status, cognitive function, and changes in function and cognitive function; skin integrity and changes in skin integrity; and incidence of major falls. These measures align with the CMS Quality Strategy,[14] which incorporates the three broad aims of the National Quality Strategy: [15]

- *Better Care:* Improve the overall quality of care by making healthcare more patient-centered, reliable, accessible, and safe.
- *Healthy People, Healthy Communities:* Improve the health of the U.S. population by supporting proven interventions to address behavioral, social, and environmental determinants of health in addition to delivering higher-quality care.
- *Affordable Care:* Reduce the cost of quality healthcare for individuals, families, employers, and government.

In deciding to propose these measures, we also took into account national priorities, including those established by the National Priorities Partnership (*http://www.qualityforum.org/Setting_Priorities/NPP/National_Priorities_Partnership.aspx*), and the HHS Strategic Plan (*http://www.hhs.gov/secretary/about/priorities/priorities.html*).

These measures also incorporate common standards and definitions that can be used across post-acute care settings to allow for the exchange of data among post-acute care providers, to provide access to longitudinal information for such providers to facilitate coordinated and improved outcomes, and to enable comparison of such assessment data across all such providers as required by section 1899B(a) of the Act.

We initiated an Ad Hoc MAP process to obtain input on the measures that we are proposing to adopt in this proposed rule. On February 5th, 2015, we made publicly available a list of Measures Under Consideration (called the ''List of Ad Hoc Measures Under Consideration for the Improving Medicare Post-Acute Care Transformation (IMPACT) Act of 2014'') (MUC list) as part of an Ad Hoc Measures Application Partnership (MAP) convened by the National Quality Forum (NQF). The MAP Post-Acute Care/Long-Term Care Workgroup convened on February 9, 2015 to ''review the measures technical properties as they are adapted for use in new settings and whether the new settings impact the measures' adherence to the NQF Scientific Acceptability criterion.'' [16] The NQF published the MUC list on our behalf for public comment from February 11, 2015 through February 19, 2015 on its Web site. The MAP Coordinating Committee convened on February 27, 2015 to discuss the public comments received, and those public comments are listed here *http://public.qualityforum.org/MAP/MAP%20Coordinating%20Committee/MAP_CC%20Feb%2027_Discussion_Guide.html#agenda.*

The MAP issued a pre-rulemaking report on March 6, 2015 Pre-Rulemaking Report, which is available for download at *http://www.qualityforum.org/Project_Pages/MAP_Post-Acute_CareLong-Term_Care_Workgroup.aspx.* The MAP's input for each of the proposed measures is discussed in this section.

Section 1899B(j) of the Act requires that we allow for stakeholder input as part of the pre-rulemaking process. Therefore, we sought stakeholder input on the measures we are proposing to adopt in this proposed rule as follows: We convened a technical expert panel that included stakeholder experts and patient representatives on February 3, 2015; we sought public input during the February 2015 ad hoc MAP process; and we implemented a public mail box for the submission of comments in January 2015, *PACQualityInitiative@cms.hhs.gov* which is located on our post-acute care quality initiatives Web site at *http://www.cms.gov/Medicare/Quality-Initiatives-Patient-Assessment-Instruments/Post-Acute-Care-Quality-Initiatives/IMPACT-Act-of-2014-and-Cross-Setting-Measures.html.* In addition, we held a National Stakeholder Special Open Door Forum on February 25, 2015 for the purpose of seeking input on these measures. Lastly, we held two separate listening sessions on February 10 and March 24, 2015, respectively.

3. Policy for Retaining SNF QRP Measures for Future Payment Determinations

For the SNF QRP, for the purpose of streamlining the rulemaking process, we are proposing that when we adopt a measure for the SNF QRP for a payment determination, this measure would be automatically retained for all subsequent payment determinations unless we propose to remove, suspend, or replace the measure.

Section 1899B(h)(1) of the Act provides that the Secretary may remove, suspend or add a quality measure or resource use or other measure specified under section 1899B(c)(1) or (d)(1) of the Act so long as the Secretary publishes a justification for the action in the **Federal Register** with a notice and comment period. Consistent with the policies of other quality reporting programs including the HIQR Program, the HOQR Program, LTCH QRP, and the IRF QRP, we are proposing that quality measures would be considered for removal if: (1) Measure performance among SNFs is so high and unvarying that meaningful distinctions in improvements in performance can no longer be made in which case the measure may be removed or suspended; (2) performance or improvement on a measure does not result in better resident outcomes; (3) a measure does not align with current clinical guidelines or practice; (4) a more broadly applicable measure (across settings, populations, or conditions) for the particular topic is available; (5) a measure that is more proximal in time to desired resident outcomes for the particular topic is available; (6) a measure that is more strongly associated with desired resident outcomes for the particular topic is available; or (7) collection or public reporting of a measure leads to negative unintended consequences other than resident harm.

We also note that under section 1899B(h)(2) of the Act, in the case of a quality measure or resource use or other measure for which there is a reason to

[14] *http://www.cms.gov/Medicare/Quality-Initiatives-Patient-Assessment-Instruments/QualityInitiativesGenInfo/CMS-Quality-Strategy.html*

[15] *http://www.ahrq.gov/workingforquality/nqs/nqs2011annlrpt.htm*

[16] . Ad-hoc Review: Expansion of Settings. (n.d.). Retrieved March 5, 2015, from *http://www.qualityforum.org/Projects/a-b/Ad_Hoc_Reviews/CMS/Ad_Hoc_Reviews-CMS.aspx*

believe that the continued collection raises possible safety concerns or would cause other unintended consequences, the Secretary may promptly suspend or remove the measure and publish the justification for the suspension or removal in the **Federal Register** during the next rulemaking cycle.

For any measure that meets this criteria (that is, a measure that raises safety concerns), we will take immediate action to remove the measure from SNF QRP, and, in addition to publishing a justification in the next rulemaking cycle, will immediately notify SNFs and the public through the usual communication channels, including listening session, memos, email notification, and web postings. We are inviting public comment on these proposals and policies.

4. Proposed Process for Adoption of Changes to SNF QRP Program Measures

Quality measures selected for the SNF QRP must be endorsed by the NQF unless they meet the statutory criteria for exception. The NQF is a voluntary consensus standard-setting organization with a diverse representation of consumer, purchaser, provider, academic, clinical, and other healthcare stakeholder organizations. The NQF was established to standardize healthcare quality measurement and reporting through its consensus development process (*http://www.qualityforum.org/About_NQF/Mission_and_Vision.aspx*). The NQF undertakes review of: (a) New quality measures and national consensus standards for measuring and publicly reporting on performance, (b) regular maintenance processes for endorsed quality measures, (c) measures with time-limited endorsement for consideration of full endorsement, and (d) ad hoc review of endorsed quality measures, practices, consensus standards, or events with adequate justification to substantiate the review (*http://www.qualityforum.org/Measuring_Performance/Ad_Hoc_Reviews/Ad_Hoc_Review.aspx*).

The NQF solicits information from measure stewards for annual reviews and in order to review measures for continued endorsement in a specific 3-year cycle. In this measure maintenance process, the measure steward is responsible for updating and maintaining the currency and relevance of the measure and for confirming existing specifications to the NQF on an annual basis. As part of the ad hoc review process, the ad hoc review requester and the measure steward are responsible for submitting evidence for review by a NQF Technical Expert panel which, in turn, provides input to the Consensus Standards Approval Committee which then makes a decision on endorsement status and/or specification changes for the measure, practice, or event.

The NQF regularly maintains its endorsed measures through annual and triennial reviews, which may result in the NQF making updates to the measures. We believe that it is important to have in place a subregulatory process to incorporate nonsubstantive updates made by the NQF into the measure specifications as we have adopted for the Hospital IQR Program so that these measures remain up-to-date. We also recognize that some changes the NQF might make to its endorsed measures are substantive in nature and might not be appropriate for adoption using a subregulatory process.

Therefore, in the FY 2013 IPPS/LTCH PPS final rule (77 FR 53504 through 53505), we finalized a policy under which we use a subregulatory process to make nonsubstantive updates to measures used for the Hospital IQR Program. For what constitutes substantive versus nonsubstantive changes, we expect to make this determination on a case-by-case basis. Examples of nonsubstantive changes to measures might include updated diagnosis or procedure codes, medication updates for categories of medications, broadening of age ranges, and exclusions for a measure (such as the addition of a hospice exclusion to the 30-day mortality measures). We believe that nonsubstantive changes may include updates to NQF-endorsed measures based upon changes to guidelines upon which the measures are based.

Therefore, we propose to use rulemaking to adopt substantive updates made to measures as we have for the Hospital IQR Program. Examples of changes that we might consider to be substantive would be those in which the changes are so significant that the measure is no longer the same measure, or when a standard of performance assessed by a measure becomes more stringent (for example, changes in acceptable timing of medication, procedure/process, or test administration). Another example of a substantive change would be where the NQF has extended its endorsement of a previously endorsed measure to a new setting, such as extending a measure from the inpatient setting to hospice. These policies regarding what is considered substantive versus nonsubstantive would apply to all measures in the SNF QRP. We also note that the NQF process incorporates an opportunity for public comment and engagement in the measure maintenance process.

We believe this policy adequately balances our need to incorporate updates to the SNF QRP measures in the most expeditious manner possible while preserving the public's ability to comment on updates that so fundamentally change an endorsed measure that it is no longer the same measure that we originally adopted.

We are inviting public comment on this proposal.

5. Proposed New Quality Measures for FY 2018 and Subsequent Payment Determinations

For the FY 2018 SNF QRP and subsequent years, we are proposing to adopt three post-acute care (PAC) cross-setting quality measures. These measures address the following domains: (1) Skin integrity and changes in skin integrity; (2) incidence of major falls; and (3) functional status, cognitive function, and changes in function and cognitive function, which are all required under section 1899B(c)(1) of the Act. The proposed quality measure addressing skin integrity and changes in skin integrity is the NQF-endorsed measure, Percent of Residents or Patients with Pressure Ulcers That Are New or Worsened (Short Stay) (NQF #0678) (*http://www.qualityforum.org/QPS/0678*). The proposed quality measure addressing the incidence of major falls is an application of the NQF-endorsed Percent of Residents Experiencing One or More Falls with Major Injury (Long Stay) (NQF #0674) (*http://www.qualityforum.org/QPS/0674*). Finally, the proposed quality measure addressing functional status, cognitive function, and changes in function and cognitive function is an application of the Percent of Long-Term Care Hospital Patients With an Admission and Discharge Functional Assessment and a Care Plan that Addresses Function (NQF #2631; under NQF review) (*http://www.qualityforum.org/QPS/2631*).

The proposed quality measures addressing the domains of incidence of major falls and functional status, as well as cognitive function, and changes in function and cognitive function, are not currently NQF-endorsed for the SNF population. We reviewed the NQF's endorsed measures and were unable to identify any NQF-endorsed cross-setting quality measures that focused on these domains. We are also unaware of any other cross-setting quality measures that have been endorsed or adopted by another consensus organization.

a. Quality Measure Addressing the Domain of Skin Integrity and Changes in Skin Integrity: Percent of Residents or Patients With Pressure Ulcers That Are New or Worsened (Short Stay) (NQF #0678)

We are proposing to adopt for the SNF QRP, beginning with the FY 2018 payment determination, NQF #0678, Percent of Residents or Patients with Pressure Ulcers that are New or Worsened (Short Stay) as a cross-setting quality measure that satisfies the skin integrity and changes in skin integrity domain. This measure assesses the percentage of short-stay residents or patients in SNFs, IRFs, and LTCHs with Stage 2 through 4 pressure ulcers that are new or worsened since a prior assessment.

Pressure ulcers are a serious medical condition that result in pain, decreased quality of life, and increased mortality in aging populations.[17] [18] [19] [20] Pressure ulcers typically are the result of prolonged periods of uninterrupted pressure on the skin, soft tissue, muscle, and bone.[21] [22] [23] Elderly individuals in SNFs are prone to a wide range of medical conditions that increase their risk of developing pressure ulcers. These include impaired mobility or sensation, malnutrition or undernutrition, obesity, stroke, diabetes, dementia, cognitive impairments, circulatory diseases, dehydration, the use of wheelchairs, medical devices, and a history of pressure ulcers or a pressure ulcer at admission.[24] [25] [26] [27] [28] [29] [30] [31] [32] [33] [34]

Section 1899B(a)(1)(B) of the Act requires that the data submitted on quality measures under section 1899B(c)(1) of the Act be standardized and interoperable across PAC settings, and section 1899B(c)(2)(A) of the Act requires that the measures be reported through the use of a PAC assessment instrument. These requirements are in line with the NQF Steering Committee report, which stated that to understand the impact of pressure ulcers across settings, quality measures addressing prevention, incidence, and prevalence of pressure ulcers must be harmonized and aligned. This measure has been implemented in nursing homes for resident population with stays of less than 100 days under CMS's Nursing Home Quality Initiative. We also adopted the measure for use in the LTCH QRP (76 FR 51753 through 51756) beginning with the FY 2014 payment determination, and for use in the IRF QRP (76 FR 24254) beginning with the FY 2014 payment determination. We have not, to date, adopted the measure for the home health setting. More information on the NQF endorsed measure, the Percent of Residents or Patients with Pressure Ulcers That Are New or Worsened (Short Stay), is available at *http://www.qualityforum.org/QPS/0678.*

A TEP convened by our measure development contractor provided input on the technical specifications of this quality measure, including the feasibility of implementing the measure across PAC settings. The TEP supported the measure's implementation across PAC settings and was also supportive of our efforts to standardize the measure for cross-setting development. The MAP also supported the use of NQF #0678, Percent of Residents or Patients with Pressure Ulcers that are New or Worsened (Short Stay) in the SNF QRP as a cross-setting quality measure.

We are proposing that the data for this quality measure would be collected using the MDS 3.0, currently submitted by SNFs through the Quality Improvement and Evaluation System (QIES) Assessment Submission and Processing (ASAP) system. We believe that this data collection method will minimize the reporting burden on SNFs because SNFs are already required to submit MDS data for payment purposes. For more information on SNF submission using the QIES ASAP system, readers are referred to *http://www.cms.gov/Medicare/Quality-Initiatives-Patient-Assessment-Instruments/NursingHomeQualityInits/NHQIMDS30TechnicalInformation.html.*

The data items that we would use to calculate the proposed quality measure include: M0800A (Worsening in Pressure Ulcer Status Since Prior Assessment (OBRA or scheduled PPS assessment) or Last Admission/Entry or Reentry, Stage 2), M0800B (Worsening in Pressure Ulcer Status Since Prior Assessment (OBRA or scheduled PPS assessment) or Last Admission/Entry or Reentry, Stage 3), and M0800C (Worsening in Pressure Ulcer Status Since Prior Assessment (OBRA or scheduled PPS assessment) or Last Admission/Entry or Reentry, Stage 4). This measure would be calculated at two points in time, at admission and discharge (see Proposed Form, Manner, and Timing of Quality Data Submission). The specifications and data items for the Percent of Residents or Patients with Pressure Ulcers that are New or Worsened (Short Stay), are available in the MDS 3.0 Quality Measures User's Manual available on our Web site at *http://www.cms.gov/Medicare/Quality-Initiatives-Patient-Assessment-Instruments/NursingHomeQualityInits/NHQIQualityMeasures.html.*

We invite public comment on our proposal to adopt NQF #0678 Percent of Residents or Patients with Pressure Ulcers that are New or Worsened (Short Stay) for the SNF QRP for the FY 2018

[17] Casey, G. (2013). ''Pressure ulcers reflect quality of nursing care.'' Nurs N Z 19(10): 20–24.

[18] Gorzoni, M. L. and S. L. Pires (2011). ''Deaths in nursing homes.'' Rev Assoc Med Bras 57(3): 327–331.

[19] Thomas, J. M., et al. (2013). ''Systematic review: Health-related characteristics of elderly hospitalized adults and nursing home residents associated with short-term mortality.'' *J Am Geriatr Soc* 61(6): 902–911.

[20] White-Chu, E. F., et al. (2011). ''Pressure ulcers in long-term care.'' Clin Geriatr Med 27(2): 241–258.

[21] Bates-Jensen BM. Quality indicators for prevention and management of pressure ulcers in vulnerable elders. Ann Int Med. 2001;135 (8 Part 2), 744–51.

[22] Institute for Healthcare Improvement (IHI). Relieve the pressure and reduce harm. May 21, 2007. Available from *http://www.ihi.org/IHI/Topics/PatientSafety/SafetyGeneral/ImprovementStories/FSRelievethePressureandReduceHarm.htm*

[23] Russo CA, Steiner C, Spector W. Hospitalizations related to pressure ulcers among adults 18 years and older, 2006 (Healthcare Cost and Utilization Project Statistical Brief No. 64). December 2008. Available from *http://www.hcupus.ahrq.gov/reports/statbriefs/sb64.pdf.*

[24] Agency for Healthcare Research and Quality (AHRQ). Agency news and notes: pressure ulcers are increasing among hospital patients. January 2009. Available from *http://www.ahrq.gov/research/jan09/0109RA22.htm.=*

[25] Bates-Jensen BM. Quality indicators for prevention and management of pressure ulcers in vulnerable elders. Ann Int Med. 2001;135 (8 Part 2), 744–51.

[26] Cai, S., et al. (2013). ''Obesity and pressure ulcers among nursing home residents.'' Med Care 51(6): 478–486.

[27] Casey, G. (2013). ''Pressure ulcers reflect quality of nursing care.'' Nurs N Z 19(10): 20–24.

[28] Hurd D, Moore T, Radley D, Williams C. Pressure ulcer prevalence and incidence across post-acute care settings. Home Health Quality Measures & Data Analysis Project, Report of Findings, prepared for CMS/OCSQ, Baltimore, MD, under Contract No. 500–2005–000181 TO 0002. 2010.

[29] MacLean DS. Preventing & managing pressure sores. Caring for the Ages. March 2003;4(3):34–7. Available from *http://www.amda.com/publications/caring/march2003/policies.cfm.*

[30] Michel, J. M., et al. (2012). ''As of 2012, what are the key predictive risk factors for pressure ulcers? Developing French guidelines for clinical practice.'' Ann Phys Rehabil Med 55(7): 454–465

[31] National Pressure Ulcer Advisory Panel (NPUAP) Board of Directors; Cuddigan J, Berlowitz DR, Ayello EA (Eds). Pressure ulcers in America: Prevalence, incidence, and implications for the future. An executive summary of the National Pressure Ulcer Advisory Panel Monograph. Adv Skin Wound Care. 2001;14(4):208–15

[32] Park-Lee E, Caffrey C. Pressure ulcers among nursing home residents: United States, 2004 (NCHS Data Brief No. 14). Hyattsville, MD: National Center for Health Statistics, 2009. Available from *http://www.cdc.gov/nchs/data/databriefs/db14.htm*

[33] Reddy, M. (2011). ''Pressure ulcers.'' Clin Evid (Online) 2011.

[34] Teno, J. M., et al. (2012). ''Feeding tubes and the prevention or healing of pressure ulcers.'' Arch Intern Med 172(9): 697–701.

payment determination and subsequent years.

As part of our ongoing measure development efforts, we are considering a future update to the numerator of the quality measure NQF #0678, Percent of Residents or Patients with Pressure Ulcers that are New or Worsened (Short Stay). This update would require PAC providers to report the development of unstageable pressure ulcers and suspected deep tissue injuries (sDTIs). Under this potential change we are considering, the numerator of the quality measure would be updated to include unstageable pressure ulcers, including sDTIs that are new/developed in the facility, as well as Stage 1 or 2 pressure ulcers that become unstageable due to slough or eschar (indicating progression to a stage 3 or 4 pressure ulcer) after admission. SNFs are already required to complete the unstageable pressure ulcer items on the MDS 3.0. As such, this update would require a change in the way the measure is calculated but would not increase the data collection burden for SNFs.

A TEP convened by our measure development contractor strongly recommended that CMS update the specifications for the measure to include these pressure ulcers in the numerator, although it acknowledged that unstageable pressure ulcers and sDTIs cannot and should not be assigned a numeric stage. The TEP also recommended that a Stage 1 or 2 pressure ulcer that becomes unstageable due to slough or eschar should be considered worsened because the presence of slough or eschar indicates a full thickness (equivalent to Stage 3 or 4) wound.[35] [36] These recommendations were supported by technical and clinical advisors and the National Pressure Ulcer Advisory Panel.[37] Additionally, exploratory data analysis conducted by our measure development contractor suggests that the addition of unstageable pressure ulcers, including sDTIs, will increase the observed incidence of new or worsened pressure ulcers at the facility level and may improve the ability of the quality measure to discriminate between poor- and high-performing facilities.

We invite public comment to inform our consideration of the inclusion of unstageable pressure ulcers and sDTIs in the numerator of the quality measure NQF #0678 Percent of Residents or Patients with Pressure Ulcers that are New or Worsened (Short Stay) as part of our future measure development efforts.

b. Quality Measure Addressing the Domain of the Incidence of Major Falls: An Application of the Measure Percent of Residents Experiencing One or More Falls With Major Injury (Long Stay) (NQF #0674)

We are proposing to adopt beginning with the FY 2018 SNF QRP an application to the SNF setting of the Percent of Residents Experiencing One or More Falls with Major Injury (Long Stay) (NQF #0674) measure that satisfies the incidence of major falls domain. This outcome measure reports the percentage of residents who have experienced falls with major injury over a 3-month period. This measure was developed by CMS and is NQF-endorsed for long-stay residents of nursing facilities.

Research indicates that fall-related injuries are the most common cause of accidental death in people aged 65 and older, responsible for approximately 41 percent of accidental deaths annually.[38] Rates increase to 70 percent of accidental deaths among individuals aged 75 and older.[39] In addition to death, falls can lead to fracture, soft tissue or head injury, fear of falling, anxiety, and depression.[40] Research also indicates that approximately 75 percent of nursing facility residents fall at least once a year. This is twice the rate of their counterparts in the community.[41] Further, it is estimated that 10 percent to 25 percent of nursing facility resident falls result in fractures and/or hospitalization.[42]

Falls also represent a significant cost burden to the entire health care system, with injurious falls accounting for 6 percent of medical expenses among those age 65 and older.[43] In their 2006 work, Sorensen et al. estimate the costs associated with falls of varying severity among nursing home residents. Their work suggests that acute care costs incurred for falls among nursing home residents range from $979 for a typical case with a simple fracture to $14,716 for a typical case with multiple injuries.[44] A similar study of hospitalizations of nursing home residents due to serious fall-related injuries (intracranial bleed, hip fracture, other fracture) found an average cost of $23,723.[45] Among the SNF population, the average 6-month cost of a resident with a hip fracture was estimated at $11,719 in 1996 U.S. dollars.[46]

According to Morse, 78 percent of falls are anticipated physiologic falls, which are falls among individuals who scored high on a risk assessment scale, meaning their risk could have been identified in advance of the fall.[47] To date, studies have identified a number of risk factors for falls.[48] [49] [50] [51] [52] [53] [54] [55] [56]

[35] Schwartz, M., Nguyen, K.H., Swinson Evans, T.M., Ignaczak, M.K., Thaker, S., and Bernard, S.L.: Development of a Cross-Setting Quality Measure for Pressure Ulcers: OY2 Information Gathering, Final Report. Centers for Medicare & Medicaid Services, November 2013. Available: *http://www.cms.gov/Medicare/Quality-Initiatives-Patient-Assessment-Instruments/Post-Acute-Care-Quality-Initiatives/Downloads/Development-of-a-Cross-Setting-Quality-Measure-for-Pressure-Ulcers-Information-Gathering-Final-Report.pdf*

[36] Schwartz, M., Ignaczak, M.K., Swinson Evans, T.M., Thaker, S., and Smith, L.: The Development of a Cross-Setting Pressure Ulcer Quality Measure: Summary Report on November 15, 2013, Technical Expert Panel Follow-Up Webinar. Centers for Medicare & Medicaid Services, January 2014. Available: *http://www.cms.gov/Medicare/Quality-Initiatives-Patient-Assessment-Instruments/Post-Acute-Care-Quality-Initiatives/Downloads/Development-of-a-Cross-Setting-Pressure-Ulcer-Quality-Measure-Summary-Report-on-November-15–2013-Technical-Expert-Pa.pdf.*

[37] Schwartz, M., Nguyen, K.H., Swinson Evans, T.M., Ignaczak, M.K., Thaker, S., and Bernard, S.L.: Development of a Cross-Setting Quality Measure for Pressure Ulcers: OY2 Information Gathering, Final Report. Centers for Medicare & Medicaid Services, November 2013. Available: *http://www.cms.gov/Medicare/Quality-Initiatives-Patient-Assessment-Instruments/Post-Acute-Care-Quality-Initiatives/Downloads/Development-of-a-Cross-Setting-Quality-Measure-for-Pressure-Ulcers-Information-Gathering-Final-Report.pdf.*

[38] Currie LM. Fall and injury prevention. Annu Rev Nurs Res. 2006;24:39–74.

[39] Fuller GF. Falls in the elderly. Am Fam Physician. Apr 1 2000;61(7):2159–2168, 2173–2154.

[40] Premier Inc. Causes of Falls. 2013. Available: *https://www.premierinc.com/quality-safety/toolsservices/safety/topics/falls/causes_of_falls.jsp.*

[41] Rubenstein LZ, Josephson KR, Robbins AS. Falls in the nursing home. Ann Intern Med. 1994 Sep 15; 121(6):442–51.

[42] Vu MQ, Weintraub N, Rubenstein LZ. Falls in the nursing home: are they preventable? J Am Med Dir Assoc. 2004 Nov-Dec; 5(6):401–6. Review.

[43] Tinetti ME, Williams CS. The effect of falls and fall injuries on functioning in community-dwelling older persons. J Gerontol A Biol Sci Med Sci. 1998 Mar;53(2):M112–9.

[44] Sorensen SV, de Lissovoy G, Kunaprayoon D, Resnick B, Rupnow MF, Studenski S. A taxonomy and economic consequence of nursing home falls. Drugs Aging. 2006;23(3):251–62.

[45] Quigley PA, Campbell RR, Bulat T, Olney RL, Buerhaus P, Needleman J. Incidence and cost of serious fall-related injuries in nursing homes. Clin Nurs Res. Feb 2012;21(1):10–23.

[46] Kramer AM, Steiner JF, Schlenker RE, et al. Outcomes and costs after hip fracture and stroke: a comparison of rehabilitation settings. JAMA. 1997;277(5):396–404.

[47] Ibid. Ibid.Morse, J. M. (1996). Preventing patient falls. Sage.

[48] Rothschild JM, Bates DW, Leape LL. Preventable medical injuries in older patients. Arch Intern Med. 2000 Oct 9; 160(18):2717–28.

[49] Morris JN, Moore T, Jones R, et al. Validation of long-term and post-acute care quality indicators. CMS Contract No: 500–95–0062/T.O. #4. Cambridge, MA: Abt Associates, Inc., June 2003.

[50] Avidan AY, Fries BE, James ML, Szafara KL, Wright GT, Chervin RD. Insomnia and hypnotic use, recorded in the minimum data set, as predictors of falls and hip fractures in Michigan nursing homes. J Am Geriatr Soc. 2005 Jun; 53(6):955–62.

[51] Fonad E, Wahlin TB, Winblad B, Emami A, Sandmark H. Falls and fall risk among nursing

The identification of such risk factors suggests the potential for health care facilities to reduce and prevent the incidence of falls.

The Percent of Residents Experiencing One or More Falls with Major Injury (Long Stay) (NQF #0674) quality measure is NQF-endorsed and has been successfully implemented in nursing facilities for long-stay residents since 2011. In addition, the quality measure is currently publicly reported on CMS' Nursing Home Compare Web site at *http://www.medicare.gov/nursinghomecompare/search.html.* Further, an application of the quality measure was adopted for use in the LTCH QRP in the FY 2015 IPPS/LTCH PPS final rule (79 FR 50290).

Although NQF #0674 is not currently endorsed for the SNF setting, we reviewed the NQF's consensus endorsed measures and were unable to identify any NQF-endorsed cross-setting quality measures for that setting that are focused on falls with major injury. We are aware of one NQF-endorsed measure, Falls with Injury (NQF #0202), which is a measure designed for adult acute inpatient and rehabilitation patients capturing ''all documented patient falls with an injury level of minor or greater on eligible unit types in a calendar quarter, reported as injury falls per 100 days.'' [57] NQF #0202 is not appropriate to meet the IMPACT Act domain as it includes minor injury in the numerator definition. Additionally, including all falls could result in providers limiting the freedom of activity for individuals at higher risk for falls. We are unaware of any other cross-setting quality measures for falls with major injury that have been endorsed or adopted by another consensus organization for the SNF setting. Therefore, we are proposing to adopt this measure under the Secretary's authority to specify non-NQF-endorsed measures under section 1899B.

A TEP convened by our measure development contractor provided input on the technical specifications of this quality measure, including the feasibility of implementing the measure across PAC settings. The TEP was supportive of the implementation of this measure across PAC settings and was also supportive of our efforts to standardize this measure for cross-setting development. The MAP conditionally supported the use of an application of NQF #0674 Percent of Residents Experiencing One or More Falls with Major Injury (Long Stay) in the SNF QRP as a cross-setting quality measure. More information about the MAP's recommendations for this measure is available in the report entitled MAP Off-Cycle Deliberations 2015: Measures under Considerations to Implement Provisions of the IMPACT Act, which can be found at *http://www.qualityforum.org/Project_Pages/MAP_Post-Acute_CareLong-Term_Care_Workgroup.aspx.*

More information on the NQF endorsed measure, the Percent of Residents Experiencing One or More Falls with Major Injury (Long Stay) is available at *http://www.qualityforum.org/QPS/0674.*

We are proposing that data for this quality measure will be collected using the MDS 3.0, currently submitted by SNFs through the QIES ASAP system for the reason noted previously.

The data items that we would use to calculate this proposed quality measure include: J1800 (Any Falls Since Admission/Entry (OBRA or Scheduled PPS) or Reentry or Prior Assessment, whichever is more recent), and J1900 (Number of Falls Since Admission/Entry (OBRA or Scheduled PPS) or Reentry or Prior Assessment, whichever is more recent). This measure would be calculated at the time of discharge (see Proposed Form, Manner, and Timing of Quality Data Submission). The specifications for the application of the measure, the Percent of Residents Experiencing One or More Falls with Major Injury (Long Stay), for the SNF population are available on our SNF QRP measures and technical Web site at *http://www.cms.gov/Medicare/Quality-Initiatives-Patient-Assessment-Instruments/NursingHomeQualityInits/SNF-Quality-Reporting-Program-Measures-and-Technical-Information.html.*

We refer readers to the Form, Manner, and Timing of Quality Data Submission section of this proposed rule for more information on the proposed data collection and submission timeline for this proposed quality measure.

We invite public comment on our proposal to adopt an application of Percent of Residents Experiencing One or More Falls with Major Injury (Long Stay) (NQF #0674) measure for the SNF QRP beginning with the FY 2018 payment determination.

c. Quality Measure Addressing the Domain of Functional Status, Cognitive Function, and Changes in Function and Cognitive Function: Application of Percent of Long-Term Care Hospital Patients With an Admission and Discharge Functional Assessment and a Care Plan That Addresses Function (NQF #2631; Under NQF Review)

We are proposing to adopt beginning with the FY 2018 SNF QRP an application of the quality measure Percent of Long-Term Care Hospital Patients with an Admission and Discharge Functional Assessment and a Care Plan that Addresses Function (NQF #2631; under NQF review) as a cross-setting quality measure that satisfies the functional status, cognitive function, and changes in functional status and cognitive function domain. This quality measure reports the percent of patients or residents with both an admission and a discharge functional assessment and an activity (self-care or mobility) a goal that addresses function.

The National Committee on Vital and Health Statistics' Subcommittee on Health,[58] noted that ''information on functional status is becoming increasingly essential for fostering healthy people and a healthy population. Achieving optimal health and well-being for Americans requires an understanding across the life span of the effects of people's health conditions on their ability to do basic activities and participate in life situations in other words, their functional status.'' This is supported by research showing that patient and resident functioning is associated with important outcomes such as discharge destination and length of stay in inpatient settings,[59] as well as the risk of nursing home placement and hospitalization of older adults living in the community.[60]

home residents. J Clin Nurs. 2008 Jan; 17(1):126–34.

[52] Currie LM. Fall and injury prevention. Annu Rev Nurs Res. 2006;24:39–74.

[53] Ellis AA, Trent RB. Do the risks and consequences of hospitalized fall injuries among older adults in California vary by type of fall? J Gerontol A Biol Sci Med Sci. Nov 2001;56(11):M686–692.

[54] Chen XL, Liu YH, Chan DK, Shen Q, Van Nguyen H. Chin Med J (Engl). Characteristics associated with falls among the elderly within aged care wards in a tertiary hospital: a retrospective. 2010 Jul;123(13):1668–72.

[55] Frisina PG, Guellnitz R, Alverzo J. A time series analysis of falls and injury in the inpatient rehabilitation setting. Rehabil Nurs. 2010 JulAug;35(4):141–6, 166.

[56] Lee JE, Stokic DS. Risk factors for falls during inpatient rehabilitant Am J Phys Med Rehabil. 2008 May;87(5):341–50; quiz 351, 422.

[57] American Nurses Association (2014, April 9). Falls with injury. Retrieved from *http://www.qualityforum.org/QPS/0202.*

[58] Subcommittee on Health National Committee on Vital and Health Statistics, ''Classifying and Reporting Functional Status'' (2001).

[59] Reistetter TA, Graham JE, Granger CV, Deutsch A, Ottenbacher KJ. Utility of Functional Status for Classifying Community Versus Institutional Discharges after Inpatient Rehabilitation for Stroke. *Archives of Physical Medicine and Rehabilitation,* 2010; 91:345–350.

[60] Miller EA, Weissert WG. Predicting Elderly People's Risk for Nursing Home Placement, Hospitalization, Functional Impairment, and

Continued

The majority of individuals who receive PAC services, including care provided by SNFs, HHAs, IRFs, and LTCHs, have functional limitations and many of these individuals are at risk for further decline in function due to limited mobility and ambulation.[61] The patient and resident populations treated by SNFs, HHAs, IRFs, and LTCHs vary in terms of their functional abilities at the time of the PAC admission and their goals of care. For IRF patients and many SNF residents, treatment goals may include fostering the person's ability to manage his or her daily activities so that he or she can complete self-care and/or mobility activities as independently as possible, and if feasible, return to a safe, active, and productive life in a community-based setting. For home health patients, achieving independence within the home environment and promoting community mobility may be the goal of care. For other home care patients, the goal of care may be to slow the rate of functional decline in order to allow the person to remain at home and avoid institutionalization.[62] Lastly, in addition to having complex medical care needs for an extended period of time, LTCH patients often have limitations in functioning because of the nature of their conditions, as well as deconditioning due to prolonged bed rest and treatment requirements (for example, ventilator use). The clinical practice guideline *Assessment of Physical Function*[63] recommends that clinicians document functional status at baseline and over time to validate capacity, decline, or progress. Therefore, assessment of functional status at admission and discharge and establishing a functional goal for discharge as part of the care plan is an important aspect of patient or resident care in all of these PAC settings.

Given the variation in patient or resident populations across the PAC settings, the functional activities that are typically assessed by clinicians for each type of PAC provider may vary. For example, rolling left and right in bed is an example of a functional activity that may be most relevant for low-functioning patients or residents who are chronically critically ill. However, certain functional activities such as eating, oral hygiene, lying to sitting on the side of the bed, toilet transfers, and walking or wheelchair mobility are important activities for patients or residents in each PAC setting.

Although, functional assessment data are currently collected by all four PAC providers and in NFs, this data collection has employed different assessment instruments, scales, and item definitions. The data cover similar topics, but are not standardized across PAC settings. The different sets of functional assessment items coupled with different rating scales makes communication about patient and resident functioning challenging when patients and residents transition from one type of setting to another. Collection of standardized functional assessment data across SNFs, HHAs, IRFs, and LTCHs using common data items would establish a common language for patient and resident functioning, which may facilitate communication and care coordination as patients and residents transition from one type of provider to another. The collection of standardized functional status data may also help improve patient and resident functioning during an episode of care by ensuring that basic daily activities are assessed for all PAC residents at the start and end of care and that at least one functional goal is established.

The functional assessment items included in the proposed functional status quality measure were originally developed and tested as part of the Post-Acute Care Payment Reform Demonstration version of the Continuity Assessment Record and Evaluation (CARE) Item Set, which was designed to standardize the assessment of a person's status, including functional status, across acute and post-acute settings (SNFs, HHAs, IRFs, and LTCHs). The functional status items on the CARE Item Set are daily activities that clinicians typically assess at the time of admission and/or discharge in order to determine patient's or resident's needs, evaluate patient or resident progress, and prepare patients, residents, and their families for a transition to home or to another setting.

The development of the CARE Item Set and a description and rationale for each item is described in a report entitled ''The Development and Testing of the Continuity Assessment Record and Evaluation (CARE) Item Set: Final Report on the Development of the CARE Item Set: Volume 1 of 3.''[64] Reliability and validity testing were conducted as part of CMS's Post-Acute Care Payment Reform Demonstration, and we concluded that the functional status items have acceptable reliability and validity. A description of the testing methodology and results are available in several reports, including the report entitled ''The Development and Testing of the Continuity Assessment Record And Evaluation (CARE) Item Set: Final Report On Reliability Testing: Volume 2 of 3''[65] and the report entitled ''The Development and Testing of The Continuity Assessment Record And Evaluation (CARE) Item Set: Final Report on Care Item Set and Current Assessment Comparisons: Volume 3 of 3.''[66] These reports are available on our Post-Acute Care Quality Initiatives Web page at *http://www.cms.gov/Medicare/Quality-Initiatives-Patient-Assessment-Instruments/Post-Acute-Care-Quality-Initiatives/CARE-Item-Set-and-B-CARE.html.*

The functional status quality measure we are proposing to adopt beginning with the FY 2018 SNF QRP is a process quality measure that is an application of the quality measure, Percent of Long-Term Care Hospital Patients with an Admission and Discharge Functional Assessment and a Care Plan that Addresses Function'' (NQF #2631; under NQF review). This quality measure reports the percent of patients or residents with both an admission and a discharge functional assessment and a treatment goal that addresses function.

This process measure requires the collection of admission and discharge functional status data by clinicians using standardized clinical assessment items, or data elements, which assess specific functional activities, that is, self-care and mobility activities. The self-care and mobility function activities are coded using a 6-level rating scale that indicates the resident's level of independence with the activity at both admission and discharge. A higher score indicates more independence.

For this quality measure, there must be documentation at the time of admission that at least one activity performance (function) goal is recorded for at least one of the standardized self-care or mobility function items using the 6-level rating scale. This indicates that an activity goal(s) has been established. Following this initial assessment, the clinical best practice would be to ensure that the resident's

Mortality: A Synthesis. Medical Care Research and Review, 57; 3: 259–297.

[61] Kortebein P, Ferrando A, Lombebeida J, Wolfe R, Evans WJ. Effect of 10 days of bed rest on skeletal muscle in health adults. JAMA; 297(16):1772–4.

[62] Ellenbecker CH, Samia L, Cushman MJ, Alster K. Patient safety and quality in home health care. Patient Safety and Quality: An Evidence-Based Handbook for Nurses. Vol 1.

[63] Kresevic DM. Assessment of physical function. In: Boltz M, Capezuti E, Fulmer T, Zwicker D, editor(s). Evidence-based geriatric nursing protocols for best practice. 4th ed. New York (NY): Springer Publishing Company; 2012. p. 89–103.

[64] Barbara Gage et al., ''The Development and Testing of the Continuity Assessment Record and Evaluation (CARE) Item Set: Final Report on the Development of the CARE Item Set'' (RTI International, 2012).

[65] Ibid.

[66] Ibid.

care plan reflected and included a plan to achieve such an activity goal(s). At the time of discharge, goal setting and establishment of a care plan to achieve the goal, is reassessed using the same 6-level rating scale, enabling the ability to evaluate success in achieving the resident's activity performance goals.

To the extent that a resident has an unplanned discharge, for example, for the purpose of being admitted to an acute care facility, the collection of discharge functional status data might not be feasible. Therefore, for patients or residents with unplanned discharges, admission functional status data and at least one treatment goal must be reported, but discharge functional status data are not required to be reported.

A TEP convened by the measure development contractor for CMS provided input on the technical specifications of this quality measure, including the feasibility of implementing the measure across PAC settings. The TEP was supportive of the implementation of this measure across PAC settings and was also supportive of our efforts to standardize this measure for cross-setting use. Additionally, the MAP conditionally supported the use of an application of the Percent of Long-Term Care Hospital Patients With an Admission and Discharge Functional Assessment and a Care Plan that Addresses Function (NQF #2631; under NQF review) for use in the SNF QRP as a cross-setting measure. The MAP noted that this functional status measure addresses an IMPACT Act domain and a MAP PAC/LTC core concept. The MAP conditionally supported this measure pending NQF-endorsement and resolution of concerns about the use of two different functional status scales for quality reporting and payment purposes. Finally, the MAP reiterated its support for adding measures addressing function, noting the group's special interest in this PAC/LTC core concept. More information about the MAP's recommendations for this measure is available in the report entitled MAP Off-Cycle Deliberations 2015: Measures under Considerations to Implement Provisions of the IMPACT Act, which can be found at *http://www.qualityforum.org/Project_Pages/MAP_Post-Acute_CareLong-Term_Care_Workgroup.aspx.*

The proposed measure is derived from the Percent of Long-Term Care Hospital Patients With an Admission and Discharge Functional Assessment and a Care Plan that Addresses Function quality measure, and we intend to submit the proposed measure to NQF for endorsement. The specifications are available for review at the SNF QRP measures and technical Web site at *http://www.cms.gov/Medicare/Quality-Initiatives-Patient-Assessment-Instruments/NursingHomeQualityInits/SNF-Quality-Reporting-Program-Measures-and-Technical-Information.html.*

We reviewed the NQF's endorsed measures and were unable to identify any NQF-endorsed cross-setting quality measures focused on assessment of function for PAC patients and residents. We are also unaware of any other cross-setting quality measures for functional assessment that have been endorsed or adopted by another consensus organization. Therefore, we are proposing to adopt this function measure for use in the SNF QRP for the FY 2018 payment determination and subsequent years under the Secretary's authority to select non-NQF-endorsed measures.

We are proposing that data for the proposed quality measure would be collected through the MDS 3.0, which SNFs currently submit through the QIES ASAP system. We refer readers to section V.C.7. of this proposed rule for more information on the proposed data collection and submission timeline for this proposed quality measure.

The calculation algorithm of the proposed measure is: (1) For each SNF stay, records of residents discharged during the 12-month target time period are identified and counted. This count is the denominator; (2) The records of residents with complete stays are identified and the number of these resident stays with complete admission functional assessment data and at least one self-care or mobility activity goal and complete discharge functional assessment data is counted; (3) The records of residents with incomplete stays are identified, and the number of these resident records with complete admission functional status data and at least one self-care or mobility goal is counted; (4) The counts from step 2 (complete SNF stays) and step 3 (incomplete SNF stays) are summed. The sum is the numerator count; and (5) the numerator count is divided by the denominator count to calculate this quality measure. This measure would be calculated at two points in time, at admission and discharge.

For purposes of assessment data collection, we propose to add new functional status items to the MDS 3.0. The items would assess specific self-care and mobility activities, and would be based on functional items included in the Post-Acute Care Payment Reform Demonstration version of the CARE Item Set. The items have been developed and tested for reliability and validity in SNFs, HHAs, IRFs, and LTCHs. More information pertaining to item testing is available on our Post-Acute Care Quality Initiatives Web page at *http://www.cms.gov/Medicare/Quality-Initiatives-Patient-Assessment-Instruments/Post-Acute-Care-Quality-Initiatives/CARE-Item-Set-and-B-CARE.html.*

The proposed function items that we would add to the MDS for purposes of the calculation of this proposed quality measure do not duplicate existing items currently collected in that assessment instrument for other purposes. The currently used MDS function items evaluate a resident's greatest dependence on three or more occasions, whereas the proposed functional items would evaluate an individual's usual performance at the time of admission and at the time of discharge for goal setting purposes. Additionally, there are several key differences between the existing and new proposed function items that may result in variation in the resident assessment results including: (1) The data collection and associated data collection instructions; (2) the rating scales used to score a resident's level of independence; and (3) the item definitions. A description of these differences is provided with the measure specifications on our SNF QRP measures and technical Web site at *http://www.cms.gov/Medicare/Quality-Initiatives-Patient-Assessment-Instruments/NursingHomeQualityInits/SNF-Quality-Reporting-Program-Measures-and-Technical-Information.html.*

Because of the differences between the current function assessment items (section G of the MDS 3.0) and the proposed function assessment items that we would collect for purposes of calculating the proposed measure, we would require that SNFs submit data on both sets of items. Data collection for the new proposed function items do not substitute for the data collection under the current Section G.

We invite public comments on our proposal to adopt beginning with the FY 2018 SNF QRP an application of the quality measure Percent of Long-Term Care Hospital Patients with an Admission and Discharge Functional Assessment and a care Plan that Addresses Function (NQF #2631; under review).

6. SNF QRP Quality Measures Under Consideration for Future Years

TABLE 10—SNF QRP QUALITY MEASURES AND CONCEPTS UNDER CONSIDERATION FOR FUTURE YEARS

Impact Act Domain	Measures to reflect all-condition risk-adjusted potentially preventable hospital readmission rates.
Measures	(NQF #2510): *Skilled Nursing Facility 30-Day All-Cause Readmission Measure (SNFRM).*
	(NQF #2512; NQF #2502): Application of the LTCH/IRF All-Cause Unplanned Readmission Measure for 30 Days Post Discharge from LTCHs/IRFs.
Impact Act Domain	Resource Use, including total estimated Medicare spending per beneficiary.
Measure	Application of the Payment Standardized Medicare Spending Per Beneficiary (MSPB).
Impact Act Domain	Discharge to community.
Measure	Percentage residents/patients at discharge assessment, who are discharged to a higher level of care or to the community. Measure assesses if the patient/resident went to the community and whether they stayed there. Ideally, this measure would be paired with the 30-day all-cause readmission measure.

We invite comment on the measure domains and associated measures and measure concepts listed in Table 10. In addition, in alignment with the requirements of the IMPACT Act to develop quality measures and standardize data for comparative purposes, we believe that evaluating outcomes across the post-acute settings using standardized data is an important priority. Therefore, in addition to proposing a process-based measure for the domain in the IMPACT Act of ''Functional status, cognitive function, and changes in function and cognitive function'', which is included in this year's proposed rule, we also intend to develop outcomes-based quality measures, including functional status and other quality outcome measures to further satisfy this domain. These measures will be proposed in future rulemaking in order to assess functional change for each care setting as well as across care settings.

7. Form, Manner, and Timing of Quality Data Submission

a. Participation/Timing for New SNFs

Beginning with the submission of data required for the FY 2018 payment determination, we propose that a new SNF would be required to begin reporting data on any quality measures finalized for that program year by no later than the first day of the calendar quarter subsequent to 30 days after the date on its CMS Certification Number (CCN) notification letter. For example, for FY 2018 payment determinations, if a SNF received its CCN on August 28, 2016, and 30 days are added (for example, August 28 + 30 days = September 27), the SNF would be required to submit data for residents who are admitted beginning on October 1, 2016.

We invite public comment on this proposed timing for new SNFs to begin reporting quality data under the SNF QRP.

b. Data Collection Timelines and Requirements for the FY 2018 Payment Determination and Subsequent Years

As discussed previously, we are proposing that SNFs would submit data on the proposed functional status, skin integrity, and incidence of major falls measures by completing items on the MDS and then submitting the MDS to CMS through the Quality Improvement and Evaluation System (QIES), Assessment Submission and Processing System (ASAP) system. We seek comment on this proposed method of data collection.

Currently, there is no discharge assessment required when a resident is discharged from the SNF Medicare Part A coverage stay but does not leave the facility, and we are aware that this affects nearly 30 percent of all SNF residents. To collect the data at the time these beneficiaries are discharged from the SNF Part A coverage stay, we propose to add an item set in addition to the 5-Day PPS Assessment. Further, to collect the data elements required to calculate the function quality measure (an application of Percent of Long-Term Care Hospital Patients With an Admission and Discharge Functional Assessment and a Care Plan that Addresses Function [NQF #2631; under NQF review]) at the time of a residents admission, we also propose to add the necessary items to the 5-day PPS Assessment.

A list of the data items that we are proposing to add to the SNF PPS Part A Discharge and the 5-Day PPS Assessments is available on our Web site at *http://www.cms.gov/Medicare/Quality-Initiatives-Patient-Assessment-Instruments/NursingHomeQualityInits/SNF-Quality-Reporting-Program-Measures-and-Technical-Information.html.* We recognize that there may be instances where SNFs want to combine the SNF PPS Part A Discharge Assessment with other required assessments, as happens with other PPS and OBRA assessments, or scenarios in which the end of the Part A coverage stay occurs at the same time as a scheduled PPS assessment. Therefore, we invite comment on any situations where assessments may be combined or interact, which should be considered in implementing the SNF PPS Part A Discharge Assessment with a view toward addressing any issues that we may identify through the public comment process as requiring additional clarification.

For the FY 2018 payment determination, we are proposing that SNFs submit data on the three proposed quality measures for residents who are admitted to the SNF on and after October 1, 2016 and discharged from the SNF up to and including December 31, 2016, using the data submission schedule that we are proposing in this section.

We are proposing to collect a single quarter of data for FY 2018 to remain consistent with the usual October release schedule for the MDS, to give SNFs a sufficient amount of time to update their systems so that they can comply with the new data reporting requirements, and to give CMS a sufficient amount of time to determine compliance for the FY 2018 program. The proposed use of one quarter of data for the initial year of quality reporting is consistent with the approach we used to implement a number of other quality reporting programs, including the LTCH, IRF, and Hospice QRPs.

We also propose that following the close of the reporting quarter, October 1, 2016 through December 31, 2016 for the FY 2018 payment determination, SNFs would have an additional 5½ months to correct and/or submit their quality data. Consistent with the IRF QRP, we propose that the final deadline for submitting data for the FY 2018 payment determination would be May 15, 2017. We further propose that for the FY 2019 payment determination, we would collect data from the 2nd through 4th quarters of FY 2017 (that is, data for residents who are admitted from January 1st and discharged up to and including September 30th) to determine whether a SNF has met its quality reporting requirements with respect to that fiscal year. Beginning with the FY

2020 payment determination, we propose to move to a full year of fiscal year data collection. We intend to propose the FY 2019 payment determination quality reporting data submission deadlines in future rulemaking.

TABLE 11—PROPOSED MEASURES, DATA COLLECTION SOURCE, DATA COLLECTION PERIOD AND DATA SUBMISSION DEADLINES AFFECTING THE FY 2018 PAYMENT DETERMINATION

Quality measure	Data collection source	Proposed data collection period	Proposed data submission deadline for FY 2018 payment determination
NQF #0678: Percent of Patients or Residents with Pressure Ulcers that are New or Worsened.	MDS	10/01/16–12/31/16	May 15, 2017.
NQF #0674: Application of Percent of Residents Experiencing One or More Falls with Major Injury (Long Stay).	MDS	10/01/16–12/31/16	May 15, 2017.
NQF #2631*: Application of Percent of Long-Term Care Hospital Patients with an Admission and Discharge Functional Assessment and a Care Plan that Addresses Function.	MDS	10/01/16–12/31/16	May 15, 2017.

* Status: under review at NQF, please see: *http://www.qualityforum.org/ProjectMeasures.aspx?projectID=73867*, see NQF #2631.

We seek public comment on these proposals.

8. SNF QRP Data Completion Thresholds for the FY 2018 Payment Determination and Subsequent Years

We are proposing that, beginning with the FY 2018 payment determination, SNFs must report all of the data necessary to calculate the proposed quality measures on at least eighty percent of the MDS assessments that they submit. We are proposing that a SNF has reported all of the data necessary to calculate the measures if the data actually can be used for purposes of calculating the quality measures, as opposed to, for example, the use of a dash [-], to indicate that the SNF was unable to perform a pressure ulcer assessment.

We believe that because SNFs have long been required to submit MDS assessments for other purposes, SNFs should easily be able to meet this proposed requirement for the SNF QRP. Our proposal to set reporting thresholds is consistent with policies we have adopted for the Long-Term Care Hospital (79 FR 50314), Inpatient-Rehabilitation Hospital (79 FR 45923) and Home Health (79 FR 66079) Quality Reporting Programs.

Although we are proposing to adopt an 80 percent threshold initially, we intend to propose to raise the threshold level for subsequent program years through future rulemaking.

We are also proposing that for the FY 2018 SNF QRP, any SNF that does not meet the proposed requirement that 80 percent of all MDS assessments submitted contain 100 percent of all data items necessary to calculate the SNF QRP measures would be subject to a reduction of 2 percentage points to its FY 2018 market basket percentage.

We invite comment on the proposed SNF QRP data completion requirements.

9. SNF QRP Data Validation Requirements for the FY 2018 Payment Determination and Subsequent Years

To ensure the reliability and accuracy of the data submitted under the SNF QRP, we intend to propose to adopt policies and processes for validating the data submitted under the SNF QRP in future rulemaking. At this time, we are seeking comment on what elements we should consider including in such a process.

10. SNF QRP Submission Exception and Extension Requirements for the FY 2018 Payment Determination and Subsequent Years

Our experience with other quality reporting programs has shown that there are times when providers are unable to submit quality data due to extraordinary circumstances beyond their control (for example, natural, or man-made disasters). Other extenuating circumstances are reviewed on a case-by-case basis. We have defined a ''disaster'' as any natural or man-made catastrophe which causes damages of sufficient severity and magnitude to partially or completely destroy or delay access to medical records and associated documentation. Natural disasters could include events such as hurricanes, tornadoes, earthquakes, volcanic eruptions, fires, mudslides, snowstorms, and tsunamis. Man-made disasters could include such events as terrorist attacks, bombings, floods caused by man-made actions, civil disorders, and explosions. A disaster may be widespread and impact multiple structures or be isolated and impact a single site only.

In certain instances of either natural or man-made disasters, a SNF may have the ability to conduct a full resident assessment, and record and save the associated data either during or before the occurrence of the extraordinary event. In this case, the extraordinary event has not caused the facility's data files to be destroyed, but it could hinder the SNF's ability to meet the quality reporting program's data submission deadlines. In this scenario, the SNF would potentially have the ability to report the data at a later date, after the emergency has passed. In such cases, a temporary extension of the deadlines for reporting might be appropriate.

In other circumstances of natural or man-made disaster, a SNF may not have had the ability to conduct a full resident assessment, or to record and save the associated data before the occurrence of the extraordinary event. In such a scenario, the facility may not have complete data to submit to CMS. We believe that it may be appropriate, in these situations, to grant a full exception to the reporting requirements for a specific period of time.

We do not wish to penalize SNFs in these circumstances or to unduly increase their burden during these times. Therefore, we are proposing a process for SNFs to request and for us to grant exceptions and extensions with respect to the quality data reporting requirements of the SNF QRP for one or more quarters, beginning with the FY 2018 payment determination, when there are certain extraordinary circumstances beyond the control of the SNF. When an exception or extension is granted, we would not reduce the SNF's PPS payment for failure to comply with the requirements of the SNF QRP.

We are proposing that if a SNF seeks to request an exception or extension

with respect to the SNF QRP, the SNF should request an exception or extension within 90 days of the date that the extraordinary circumstances occurred. The SNF may request an exception or extension for one or more quarters by submitting a written request to CMS that contains the information noted below, via email to the SNF Exception and Extension mailbox at *SNFQRPReconsiderations@cms.hhs.gov.* Requests sent to CMS through any other channel will not be considered as valid requests for an exception or extension from the SNF QRP's reporting requirements for any payment determination.

We note that the subject of the email must read ''SNF QRP Exception or Extension Request'' and the email must contain the following information:

- SNF CCN;
- SNF name;
- CEO or CEO-designated personnel contact information including name, telephone number, email address, and mailing address (the address must be a physical address, not a post office box);
- SNF's reason for requesting an exception or extension;
- Evidence of the impact of extraordinary circumstances, including but not limited to photographs, newspaper and other media articles; and
- A date when the SNF believes it will be able to again submit SNF QRP data and a justification for the proposed date.

We are proposing that exception and extension requests be signed by the SNF's CEO or CEO designated personnel, and that if the CEO designates an individual to sign the request, the CEO-designated individual has the appropriate authority to submit such a request on behalf of the SNF. Following receipt of the email, we will: (1) Provide a written acknowledgement, using the contact information provided in the email, to the CEO or CEO-designated contact notifying them that the request has been received; and (2) provide a formal response to the CEO or any CEO-designated SNF personnel, using the contact information provided in the email, indicating our decision.

This proposal does not preclude us from granting exceptions or extensions to SNFs that have not requested them when we determine that an extraordinary circumstance, such as an act of nature, affects an entire region or locale. If we make the determination to grant an exception or extension to all SNFs in a region or locale, we are proposing to communicate this decision through routine communication channels to SNFs and vendors, including, but not limited to, issuing memos, emails, and notices on our SNF QRP Web site once it is available at *http://www.cms.gov/Medicare/Quality-Initiatives-Patient-Assessment-Instruments/NursingHomeQualityInits/SNF-QR-Reconsideration-and-ExceptionExtension.html.*

We are also proposing that we may grant an exception or extension to SNFs if we determine that a systemic problem with one of our data collection systems directly affected the ability of the SNF to submit data. Because we do not anticipate that these types of systemic errors will happen often, we do not anticipate granting an exception or extension on this basis frequently.

If a SNF is granted an exception, we will not require that the SNF submit any measure data for the period of time specified in the exception request decision. If we grant an extension to a SNF, the SNF will still remain responsible for submitting quality data collected during the timeframe in question, although we will specify a revised deadline by which the SNF must submit this quality data.

We also propose that any exception or extension requests submitted for purposes of the SNF QRP will apply to that program only, and not to any other program we administer for SNFs such as survey and certification. MDS requirements, including electronic submission, during Declared Public Health Emergencies can be found at FAQs K–5, K–6 and K–9 on the following link: *http://www.cms.gov/Medicare/Provider-Enrollment-and-Certification/SurveyCertEmergPrep/downloads/AllHazardsFAQs.pdf.*

We intend to provide additional information pertaining to exceptions and extensions for the SNF QRP, including any additional guidance, on the SNF QRP Web site at *http://www.cms.gov/Medicare/Quality-Initiatives-Patient-Assessment-Instruments/NursingHomeQualityInits/SNF-QR-Reconsideration-and-ExceptionExtension.html.*

We invite public comment on these proposals for seeking and being granted exceptions and extensions to the quality reporting requirements.

11. SNF QRP Reconsideration and Appeals Procedures for the FY 2018 Payment Determination and Subsequent Years

At the conclusion of the required quality data reporting and submission period, we will review the data received from each SNF during that reporting period to determine if the SNF met the quality data reporting requirements. SNFs that are found to be noncompliant with the reporting requirements for the applicable fiscal year will receive a 2 percentage point reduction to their market basket percentage update for that fiscal year.

We are aware that some of our other quality reporting programs, such as the HIQR Program, the LTCHQR Program, and the IRF QRP include an opportunity for the providers to request a reconsideration of our initial non-compliance determination. Therefore, to be consistent with other established quality reporting programs and to provide an opportunity for SNFs to seek reconsideration of our initial non-compliance decision, we are proposing a process that will enable a SNF to request reconsideration of our initial non-compliance decision in the event that it believes that it was incorrectly identified as being non-compliant with the SNF QRP reporting requirements for a particular fiscal year.

For the FY 2018 payment determination, and that of subsequent years, we are proposing that a SNF would receive a notification of noncompliance if we determine that the SNF did not submit data in accordance with the data reporting requirements with respect to the applicable FY. The purpose of this notification is to put the SNF on notice of the following: (1) That the SNF has been identified as being non-compliant with the SNF QRP's reporting requirements for the applicable fiscal year; (2) that the SNF will be scheduled to receive a reduction in the amount of two percentage points to its market basket percentage update for the applicable fiscal year; (3) that the SNF may file a request for reconsideration if it believes that the finding of noncompliance is erroneous, has submitted a request for an extension or exception that has not yet been decided, or has been granted an extension or exception; and (4) that the SNF must follow a defined process on how to file a request for reconsideration, which will be described in the notification. We would only consider requests for reconsideration after an SNF has been found to be noncompliant.

Notifications of noncompliance and any subsequent notifications from CMS would be sent via a traceable delivery method, such as certified U.S. mail or registered U.S. mail, or through other practicable notification processes, such as a report from CMS to the provider as a Certification and Survey Provider Enhanced Reports (CASPER) report, that will provide information pertaining to their compliance with the reporting requirements for the given reporting cycle. To obtain the CASPER report, providers should access the CASPER

Reporting Application. Information on how to access the CASPER Reporting Application is available on the Quality Improvement Evaluation System (QIES) Technical Support Office Web site (direct link), *https://web.qiesnet.org/qiestosuccess/*. Once access is established providers can select ''CASPER Reports'' link. The ''CASPER Reports'' link will connect a SNF to the QIES National System Login page for CASPER Reporting.

We seek comments on the most preferable delivery method for the notice of non-compliance, such as U.S. Mail, email, CASPER, etc.

We propose to disseminate communications regarding the availability of compliance reports in the CASPER reports through routine channels to SNFs and vendors, including, but not limited to issuing memos, emails, Medicare Learning Network (MLN) announcements, and notices on our SNF QRP Web site once it is available at *http://www.cms.gov/Medicare/Quality-Initiatives-Patient-Assessment-Instruments/NursingHomeQualityInits/SNF-QR-Reconsideration-and-ExceptionExtension.html*.

A SNF would have 30 days from the date of the initial notification of noncompliance to submit to us a request for reconsideration. This proposed time frame allows us to balance our desire to ensure that SNFs have the opportunity to request reconsideration with our need to complete the process and provide SNFs with our reconsideration decision in a timely manner. We are proposing that a SNF may withdraw its request at any time and may file an updated request within the proposed 30-day deadline. We are also proposing that, in very limited circumstances, we may grant a request by a SNF to extend the proposed deadline for reconsideration requests. It would be the responsibility of a SNF to request an extension and demonstrate that extenuating circumstances existed that prevented the filing of the reconsideration request by the proposed deadline.

We also are proposing that as part of the SNF's request for reconsideration, the SNF would be required to submit all supporting documentation and evidence demonstrating full compliance with all SNF QRP reporting requirements for the applicable fiscal year, that the SNF has requested an extension or exception for which a decision has not yet been made, that the SNF has been granted an extension or exception, or has experienced an extenuating circumstance as defined in section V.C.10 of this rule but failed to file a timely request of exception. We propose that we would not review any reconsideration request that fails to provide the necessary documentation and evidence along with the request.

The documentation and evidence may include copies of any communications that demonstrate the SNF's compliance with the SNF QRP, as well as any other records that support the SNF's rationale for seeking reconsideration, but should not include any protected health information (PHI). We intend to provide a sample list of acceptable supporting documentation and evidence, as well as instructions for SNFs on how to retrieve copies of the data submitted to CMS for the appropriate program year in the future on our SNF QRP Web site at *http://www.cms.gov/Medicare/Quality-Initiatives-Patient-Assessment-Instruments/NursingHomeQualityInits/SNF-QR-Reconsideration-and-ExceptionExtension.html.*

We are proposing that a SNF wishing to request a reconsideration of our initial noncompliance determination would be required to do so by submitting an email to the following email address: *SNFQRPReconsiderations@cms.hhs.gov.* Any request for reconsideration submitted to us by a SNF would be required to follow the guidelines outlined on our SNF QRP Web site once it is available at *http://www.cms.gov/Medicare/Quality-Initiatives-Patient-Assessment-Instruments/NursingHomeQualityInits/SNF-QR-Reconsideration-and-ExceptionExtension.html.*

All emails must contain a subject line that reads ''SNF QRP Reconsideration Request.'' Electronic email submission is the only form of reconsideration request submission that will be accepted by us. Any reconsideration requests communicated through another channel including, but not limited to, U.S. Postal Service or phone, will not be considered as a valid reconsideration request.

We are proposing that a reconsideration request include the following information:

- SNF CMS Certification Number (CCN);
- SNF Business Name;
- SNF Business Address;
- The CEO contact information including name, email address, telephone number and physical mailing address; or

The CEO-designated representative contact information including name, title, email address, telephone number and physical mailing address; and

- CMS identified reason(s) for non-compliance from the non-compliance notification; and
- The reason(s) for requesting reconsideration.

The request for reconsideration must be accompanied by supporting documentation demonstrating compliance. Following receipt of a request for reconsideration, we will provide an email acknowledgment, using the contact information provided in the reconsideration request, to the CEO or CEO-designated representative that the request has been received. Once we have reached a decision regarding the reconsideration request, an email will be sent to the SNF CEO or CEO-designated representative, using the contact information provided in the reconsideration request, notifying the SNF of our decision.

We also propose that the notifications of our decision regarding reconsideration requests may be made available through the use of CASPER reports or through a traceable delivery method, such as certified U.S. mail or registered U.S. mail. If the SNF is dissatisfied with the decision rendered at the reconsideration level, the SNF may appeal the decision to the PRRB under 42 CFR 405.1835. We believe this proposed process is more efficient and less costly for CMS and for SNFs because it decreases the number of PRRB appeals by resolving issues earlier in the process. Additional information about the reconsideration process including details for submitting a reconsideration request will be posted in the future to our SNF QRP Web site at *http://www.cms.gov/Medicare/Quality-Initiatives-Patient-Assessment-Instruments/NursingHomeQualityInits/SNF-QR-Reconsideration-and-ExceptionExtension.html.*

We invite public comment on the proposed procedures for reconsideration and appeals.

12. Public Display of Quality Measure Data for the SNF QRP

Section 1899B(g)(1) of the Act requires the Secretary to provide for the public reporting of SNF provider performance on the quality measures specified under subsection (c)(1) and the resource use and other measures specified under subsection (d)(1) by establishing procedures for making available to the public data and information on the performance of individual SNFs with respect to the measures. Under section 1899B(g)(2) of the Act, such procedures must be consistent with those under section 1886(b)(3)(B)(viii)(VII) of the Act and also allow SNFs the opportunity to review and submit corrections to the data and other information before it is made public. Section 1899B(g)(3) of the

Act requires that the data and information be made publicly available not later than 2 years after the specified application date applicable to such a measure and provider. Finally, section 1899B(g)(4)(B) of the Act requires such procedures be consistent with Sections 1819(i) and 1919(i) of the Act. We intend to propose details related to the public display of quality measures in the future.

13. Mechanism for Providing Feedback Reports to SNFs

Section 1899B(f) of the Act requires the Secretary to provide confidential feedback reports to post-acute care providers on their performance with respect to the measures specified under subsections (c)(1) and (d)(1), beginning 1 year after the specified application date that applies to such measures and PAC providers. We intend to provide detailed procedures to SNFs on how to obtain their confidential feedback reports on the SNF QRP Web site at *http://www.cms.gov/Medicare/Quality-Initiatives-Patient-Assessment-Instruments/NursingHomeQualityInits/SNF-Quality-Reporting.html.*

D. Staffing Data Collection

1. Background and Statutory Authority

Section 1819(d)(1)(A) of the Act for SNFs and section 1919(d)(1)(A) of the Act for NFs each state that, in general, a facility must be administered in a manner that enables it to use its resources effectively and efficiently to attain or maintain the highest practicable physical, mental, and psychosocial well-being of each resident. Sections 1819(d)(4)(B) and 1919(d)(4)(B) of the Act give the Secretary authority to issue rules, for SNFs and NFs respectively, relating to the health, safety and well-being of residents and relating to the physical facilities thereof.

Section 6106 of the Affordable Care Act of 2010 (Pub. L. 111–148, March 23, 2010) added a new section 1128I to the Act to promote greater accountability for LTC facilities (defined under section 1128I(a) of the Act as skilled nursing facilities and nursing facilities). Section 1128I(g) pertains to the submission of staffing data by LTC facilities, and specifies that the Secretary, after consulting with state long-term care ombudsman programs, consumer advocacy groups, provider stakeholder groups, employees and their representatives and other parties the Secretary deems appropriate, shall require a facility to electronically submit to the Secretary direct care staffing information, including information for agency and contract staff, based on payroll and other verifiable and auditable data in a uniform format according to specifications established by the Secretary in consultation with such programs, groups, and parties. The statute further requires that the specifications established by the Secretary specify the category of work a certified employee performs (such as whether the employee is a registered nurse, licensed practical nurse, licensed vocational nurse, certified nursing assistant, therapist, or other medical personnel), include resident census data and information on resident case mix, be reported on a regular schedule, and include information on employee turnover and tenure and on the hours of care provided by each category of certified employees per resident per day. Section 1128I(g) of the Act establishes that the Secretary may require submission of information for specific categories, such as nursing staff, before other categories of certified employees, and requires that information for agency and contract staff be kept separate from information on employee staffing.

2. Consultation on Specifications

We have adopted a two-pronged strategy to comply with section 1128I(g) of the Act's consultation requirement. First, through this notice of proposed rulemaking, we are soliciting input from all interested parties, including, without limitation, state long-term care ombudsman programs, consumer advocacy groups, provider stakeholder groups, employees and their representatives. Second, we are engaged in ongoing consultation with the statutorily identified entities regarding the sub-regulatory reporting specifications that we will establish. For example, in 2012, we conducted a 6-month pilot in which facilities submitted staffing information electronically based on payroll data, and which allowed participants and other stakeholders to provide feedback on the computerized system we are considering using to collect data. Following the pilot, we continue to receive feedback on the collection and reporting of staffing information from stakeholders in anticipation of establishing the specifications for the required submission by all facilities. Over the next few months, we intend to increase the level of engagement with stakeholders, including industry associations, consumer advocacy groups, and long-term care facilities, to solicit their input on these specifications in advance of the proposed mandatory submission date. We anticipate activities to solicit feedback will include Open Door Forums, general question and answer sessions, and a voluntary submission period whereby facilities can submit staffing information on a voluntary basis to become familiar with the system and to provide feedback to CMS on systems issues in advance of the mandatory submission date. Through this proposed rule, we invite public comment on our proposed methods for consultation on the submission specifications.

3. Provisions of the Proposed Rule

We propose to modify current regulations applicable to LTC facilities that participate in Medicare and Medicaid to implement the new statutory requirement in section 1128I(g) of the Act. Specifically, we propose to amend the requirements for the administration of a LTC facility at § 483.75 by adding a new paragraph (u), Mandatory submission of staffing information based on payroll data in a uniform format.

The proposed regulation would require facilities to electronically submit to CMS complete and accurate direct care staffing information, including information for agency and contract staff, based on payroll and other verifiable and auditable data, beginning on July 1, 2016.

a. Submission Requirements

We are proposing to add a new § 483.75(u)(1) to establish the categories of information a facility must submit. This provision would implement the requirements in sections 1128I(g)(1), (2) and (4) of the Act, which require that a facility's submission of staffing information specify the category of work a certified employee performs, include resident census data and information on resident case mix, and include information on employee turnover and tenure and on the hours of care provided by each category of certified employees per resident per day. In keeping with Congress's clear intent, CMS is interpreting the statutory terms ''Certified employee'' and ''employee'' in section 1128Ig(1) and (4) of the Act to include contract and agency staff as well as direct employees.

The proposed rule also adopts certain approaches to minimize industry burden and duplication and to provide clarity for long-term care facilities that we believe are consistent with the intent, and meet the requirements, of the statute. For example, this rule does not propose to require the collection of resident case mix information as specified at section 1128I(g)(2) of the

Act because we already collect such information under § 483.20, per which LTC facilities are required to conduct resident assessments by completing the Minimum Data Set (MDS) and submit the MDS data electronically to CMS. Because the MDS data is used to calculate a facility's resident case mix, long-term care facilities are already required to meet this statutory requirement.

Additionally, for purposes of implementing the statutory reporting requirements in section 1128I(g)(4) of the Act, we proposed text for the new § 483.75(u)(1)(iii) to specify that the staffing information a facility would need to submit must include each individual's start date, end date (if applicable) and hours worked. Although the statute does not specifically require reporting each individual's start and end dates, we believe that requiring submission of these data elements is necessary to satisfy section 1128I(g)(4) of the Act's requirement that facilities submit information on turnover and retention.

Finally, although the proposed text for the new § 483.75(u)(1)(iii) would require facilities to submit each individual's hours worked, we note that section 1128I(g)(4) of the Act requires LTC facilities to report on the hours of care provided by each category of certified employees per resident per day. We believe the obligation to submit information on ''hours of care'' is satisfied by requiring facilities to submit hours worked by staff. In contrast with the statutory reference to ''direct care staffing information,'' which we believe is intended to establish that information must be submitted for the categories of individuals who render direct care, we believe Congress's intent in referring to ''hours of care'' was to require submission of information regarding the hours worked by individuals in those categories of staff providing direct care services. One of the primary objectives of the statute is for facilities to submit staffing information that is based on payroll and other verifiable and auditable data. We believe that most payroll or employee time and attendance systems capture the hours worked by individuals, and do not typically distinguish between hours spent doing different tasks (unless the tasks require different levels of pay). If we were to assume that ''hours or care'' was a subset of the hours worked by individuals, we would not be able to verify or audit the data submitted. As such, we believe that requiring facilities to report data on hours worked will yield the information Congress intended regarding ''hours of care provided.''

b. Distinguishing Employees From Agency and Contract Staff

Under section 1128I(g) of the Act's requirement that information for agency and contract staff be kept separate from information on employee staffing, we are proposing to add a new § 483.75(u)(2) to establish that, when reporting direct care staffing information for an individual, a facility must specify whether the individual is an employee of the facility or is engaged by the facility as contract or agency staff. We believe the statute's intent is to require LTC facilities to submit staffing information in a manner that can enable us to distinguish those staff that are employed by the facility from those that are engaged by the facility under a contract or through an agency. We do not believe the statute requires such data to be submitted at separate times or through separate systems, which would merely engender unnecessary costs and burden, so we intend to collect all facility staffing information at the same time and through the same system, employing a mechanism by which LTC facilities will clearly specify whether staff members are employees of the facility, or engaged under contract or through an agency.

c. Data Format

We are proposing to add a new § 483.75(u)(3) to establish that a facility must submit direct care staffing information in the format specified by CMS. This provision would implement the requirement in section 1128I(g) of the Act that facilities submit direct care staffing information in a uniform format. As noted, we are consulting with stakeholders on potential format specifications. The data that we propose be required to be submitted are similar to those already submitted by LTC facilities to CMS on the forms CMS–671 and CMS–672 (we intend for this proposed new information collection to eventually supplant the data collections via the CMS–671 and CMS–672). In advance of the proposed July 1, 2016 implementation date, we will publicize the established format specifications and will offer training to help facilities and other interested parties (for example, payroll vendors) prepare to meet the requirement.

d. Submission Schedule

Section 1128I(g)(3) of the Act requires that facilities submit direct care staffing information on a regular reporting schedule. LTC facilities now submit staffing information to CMS about once a year. Because staffing levels may change throughout the course of a year (based on, among other things, a facility's census and residents' needs), to have a more continuous and accurate reflection of facility staffing, we believe it is preferable for facilities to submit staffing information quarterly. Therefore, the proposed new § 483.75(u)(4) would establish that a facility must submit direct care staffing information on the schedule specified by CMS, but no less frequently than quarterly.

4. Compliance and Enforcement

This proposed new § 483.75(u) would implement the provisions of section 1128I(g) of the Act as requirements a LTC facility must meet to qualify to participate as a SNF in the Medicare program or a NF in the Medicaid program. As such, we plan to enforce the requirements under this new regulation through 42 CFR part 488. Should a facility fail to meet the reporting requirements of, or report inaccurate information under, the proposed § 483.75(u), CMS or the state may impose one or more remedies available to address noncompliance with the requirements for LTC facilities.

5. Conclusion

This proposed rule would implement the new requirements regarding the submission of staffing information based on payroll and other verifiable and auditable data by establishing that such submissions are requirements that a LTC facility must meet to qualify to participate as a SNF in the Medicare program or a NF in the Medicaid program. While section 1128I(g) of the Act does not make explicit that submission of staffing information based on these data is a condition of participation for Medicare or Medicaid, we believe that it is implicitly authorized by the terms of section 6106 of the Affordable Care Act. Moreover, it is explicitly permitted by the general rulemaking authority of sections 1819(d)(4)(B) and 1919(d)(4)(B) of the Act, which permit the Secretary to issue rules relating to the health, safety and well-being of residents. It is critical for both CMS and consumers to have access to accurate LTC staffing information to evaluate the quality of care rendered by such facilities. Several studies have looked at the relationship between staffing and the quality of care delivered by long term care facilities, and it is clear that staffing has an impact on the quality of care received by residents. This new collection and reporting of staffing data should enable us to have greater insight on the relationship between staffing and quality, and can be

used to inform future programs or policies.

VI. Collection of Information Requirements

As indicated below, this rule only proposes information collection requirements that are exempt from the Paperwork Reduction Act of 1995 (PRA) (44 U.S.C. 3501 *et seq.*).

Specifically, section V.D. of this preamble proposes to add § 483.75(u) to implement the provisions of section 1128I(g) of the Act as requirements a LTC facility must meet in order to qualify to participate as a SNF in the Medicare program or a NF in the Medicaid program. As such, nursing homes would be required to electronically submit direct care staffing information (including information with respect to agency and contract staff) based on payroll and other verifiable and auditable data. This requirement is exempt from the Paperwork Reduction Act (PRA) in accordance with the 1987 Omnibus Budget Reconciliation Act (OBRA) for SNF and NF information collection activities (Pub. L. 100–203, section 4204(b) and section 4214(d)). Under sections 4204(b) and 4214(d) of OBRA 1987, requirements related to the submission and retention of resident assessment data are not subject to the Paperwork Reduction Act (PRA).

Section V.C.5. of this preamble proposes the following three new quality measures for the SNF QRP beginning with the FY 2018 program year: Percent of Residents or Patients with Pressure Ulcers That Are New or Worsened (Short Stay) (NQF #0678), NQF-endorsed Percent of Residents Experiencing One or More Falls with Major Injury (Long Stay) (NQF #0674), and an application of the Percent of Long-Term Care Hospital Patients With an Admission and Discharge Functional Assessment and a Care Plan that Addresses Function (NQF #2631; under NQF review).

While the reporting of quality measures is an information collection, the requirement is exempt from the PRA in accordance with the IMPACT Act 2014. More specifically, section 1899B(m) and section 1899B(a)(2)(B) of the Act, exempt modifications that are intended to achieve the standardization of patient assessment data.

With regard to quality reporting during extraordinary circumstances, section V.C.10. of this rule proposes that SNFs may request an exception or extension from the FY 2018 payment determination and that of subsequent payment determinations. The request must be submitted by email within 90 days from the date that the extraordinary circumstances occurred.

While the preparation and submission of the request is an information collection, the requirement is exempt from the PRA in accordance with the IMPACT Act 2014. More specifically, section 1899B(m) of the Act and the sections referenced in section 1899B(a)(2)(B) of the Act, as added by the IMPACT Act 2014, exempt modifications that are intended to achieve the standardization of patient assessment data.

In section V.C.7.b. of this preamble we propose to require the collection of data—by means of a SNF PPS Part A Discharge Assessment—at the time of transition from a SNF PPS Part A stay; specifically, when the resident has not physically been discharged from the facility. Under this section we also propose to add data items to the scheduled Medicare required PPS Admission/Entry Assessment (5-day).

While the reporting of quality measures is an information collection, the requirements are exempt from the PRA in accordance with the IMPACT Act 2014. More specifically, section 1899B(m) of the Act and the sections referenced in subsection 1899B(a)(2)(B) of the Act, as added by the IMPACT Act 2014, exempt modifications that are intended to achieve the standardization of patient assessment data.

As discussed in section V.C.11. of this preamble, this rule proposes a process that will enable SNFs to request reconsideration of our initial non-compliance decision if the SNF believes that it was incorrectly identified as not having met its reporting requirements for the applicable fiscal year. Because the reconsideration and appeals requirements are associated with an administrative action (5 CFR 1320.4(a)(2) and (c)), they are exempt from the requirements of the PRA.

If you wish to comment on any of the aforementioned assumptions, please submit your comments as specified under the **DATES** and **ADDRESSES** captions of this proposed rule.

VII. Response to Comments

Because of the large number of public comments we normally receive on **Federal Register** documents, we are not able to acknowledge or respond to them individually. We will consider all comments we receive by the date and time specified in the **DATES** section of this preamble, and when we proceed with a subsequent document, we will respond to the comments in the preamble to that document.

VIII. Economic Analyses

A. Regulatory Impact Analysis

1. Introduction

We have examined the impacts of this proposed rule as required by Executive Order 12866 on Regulatory Planning and Review (September 30, 1993), Executive Order 13563 on Improving Regulation and Regulatory Review (January 18, 2011), the Regulatory Flexibility Act (RFA, September 19, 1980, Pub. L. 96–354), section 1102(b) of the Act, section 202 of the Unfunded Mandates Reform Act of 1995 (UMRA, March 22, 1995; Pub. L. 104–4), Executive Order 13132 on Federalism (August 4, 1999), and the Congressional Review Act (5 U.S.C. 804(2)).

Executive Orders 12866 and 13563 direct agencies to assess all costs and benefits of available regulatory alternatives and, if regulation is necessary, to select regulatory approaches that maximize net benefits (including potential economic, environmental, public health and safety effects, distributive impacts, and equity). Executive Order 13563 emphasizes the importance of quantifying both costs and benefits, of reducing costs, of harmonizing rules, and of promoting flexibility. This rule has been designated an economically significant rule, under section 3(f)(1) of Executive Order 12866. Accordingly, we have prepared a regulatory impact analysis (RIA) as further discussed below. Also, the rule has been reviewed by OMB.

2. Statement of Need

This proposed rule would update the SNF prospective payment rates for FY 2015 as required under section 1888(e)(4)(E) of the Act. It also responds to section 1888(e)(4)(H) of the Act, which requires the Secretary to provide for publication in the **Federal Register** before the August 1 that precedes the start of each fiscal year, the unadjusted federal per diem rates, the case-mix classification system, and the factors to be applied in making the area wage adjustment. As these statutory provisions prescribe a detailed methodology for calculating and disseminating payment rates under the SNF PPS, we do not have the discretion to adopt an alternative approach.

3. Overall Impacts

This proposed rule sets forth proposed updates of the SNF PPS rates contained in the SNF PPS final rule for FY 2015 (79 FR 45628). Based on the above, we estimate that the aggregate impact would be an increase of $500

million in payments to SNFs, resulting from the SNF market basket update to the payment rates, as adjusted by the applicable forecast error adjustment and by the MFP adjustment. The impact analysis of this proposed rule represents the projected effects of the changes in the SNF PPS from FY 2015 to FY 2016. Although the best data available are utilized, there is no attempt to predict behavioral responses to these changes, or to make adjustments for future changes in such variables as days or case-mix.

Certain events may occur to limit the scope or accuracy of our impact analysis, as this analysis is future-oriented and, thus, very susceptible to forecasting errors due to certain events that may occur within the assessed impact time period. Some examples of possible events may include newly-legislated general Medicare program funding changes by the Congress, or changes specifically related to SNFs. In addition, changes to the Medicare program may continue to be made as a result of previously-enacted legislation, or new statutory provisions. Although these changes may not be specific to the SNF PPS, the nature of the Medicare program is such that the changes may interact and, thus, the complexity of the interaction of these changes could make it difficult to predict accurately the full scope of the impact upon SNFs.

In accordance with sections 1888(e)(4)(E) and 1888(e)(5) of the Act, we update the FY 2015 payment rates by a factor equal to the market basket index percentage change adjusted by the FY 2014 forecast error and the MFP adjustment to determine the payment rates for FY 2016. As discussed previously, for FY 2012 and each subsequent FY, as required by section 1888(e)(5)(B) of the Act as amended by section 3401(b) of the Affordable Care Act, the market basket percentage is reduced by the MFP adjustment. The special AIDS add-on established by section 511 of the MMA remains in effect until such date as the Secretary certifies that there is an appropriate adjustment in the case mix. We have not provided a separate impact analysis for the MMA provision. Our latest estimates indicate that there are fewer than 4,800 beneficiaries who qualify for the add-on payment for residents with AIDS. The impact to Medicare is included in the total column of Table 12. In updating the SNF PPS rates for FY 2016, we made a number of standard annual revisions and clarifications mentioned elsewhere in this proposed rule (for example, the update to the wage and market basket indexes used for adjusting the federal rates).

The annual update set forth in this proposed rule applies to SNF PPS payments in FY 2016. Accordingly, the analysis that follows only describes the impact of this single year. In accordance with the requirements of the Act, we will publish a notice or rule for each subsequent FY that will provide for an update to the SNF PPS payment rates and include an associated impact analysis.

In accordance with sections 1888(g) and (h)(2)(A) of the Act, we are proposing to specify a Skilled Nursing Facility 30-Day All-Cause Readmission Measure (SNFRM) and adopt that measure for the SNF VBP Program. Because this proposed measure is claims-based, its adoption under the SNF VBP Program would not result in any increased costs to SNFs.

However, we do not yet have preliminary data with which we could project economic impacts associated with the measure. We intend to make additional proposals for the SNF VBP Program in future rulemaking, and we will assess the impacts of the SNFRM and any associated SNF VBP Program proposals at that time.

We believe that the burden associated with the SNF QRP is the time and effort associated with data collection and reporting. In this proposed rule, we propose three quality measures to meet the requirements of section 1888(e)(6)(B)(II) of the Act.

Our burden calculations take into account all ''new'' items required on the MDS 3.0 to support data collection and reporting for these three proposed measures. New items will be included on the following assessments: SNF PPS 5-Day, Swing Bed PPS 5-Day, OMRA—Start of Therapy Discharge, OMRA—Other Discharge, OBRA Discharge, Swing Bed OMRA—Start of Therapy Discharge, Swing Bed OMRA—Other Discharge, and Swing Bed Discharge on the MDS 3.0. The SNF QRP also requires the addition of a SNF PPS Part A Discharge Assessment which will also include new items. New items include data elements required to identify whether pressure ulcers were present on admission, to inform future development of the Percent of Residents or Patients with Pressure Ulcers That Are New or Worsened (Short Stay) (NQF #0678), as well as changes in function and occurrence of falls with major injury. To the extent applicable, we will use standardized items to collect data for the three measures. For a copy of the data collection instrument, please visit: *http://www.cms.gov/Medicare/Quality-Initiatives-Patient-Assessment-Instruments/NursingHomeQualityInits/SNF-Quality-Reporting-Program-Measures-and-Technical-Information.html.*

We estimate a total additional burden of $27.47 per Medicare-covered SNF stay, based on the most recent data available, in this case FY 2014, that 15,421 SNFs had a total of 2,599,656 Medicare-covered stays for fee-for-service beneficiaries. This would equate to 1,012,566.13 total added hours or 66 hours per SNF annually.

We believe that the additional MDS items we are proposing will be completed by Registered Nurses (RN), Occupational Therapists (OT), and/or Physical Therapists (PT), depending on the item. We identified the staff type per item based on past LTCH and IRF burden calculations in conjunction with expert opinion. Our assumptions for staff type was based on the categories generally necessary to perform assessment: Registered Nurse (RN), Occupational Therapy (OT), and Physical Therapy (PT). Individual providers determine the staffing resources necessary, therefore, we averaged the national average for these labor types and established a composite cost estimate. We obtained mean hourly wages for these staff from the U.S. Bureau of Labor Statistics' May 2013 National Occupational Employment and Wage Estimates (*http://www.bls.gov/oes/current/oes_nat.htm*), and to account for overhead and fringe benefits, we have doubled the mean hourly wage. The mean hourly wage for an RN is $33.13, doubled to $66.26 to account for overhead and fringe benefits. The mean hourly wage for an OT is $37.45, doubled to $74.90 to account for overhead and fringe benefits. The mean hourly wage for a PT is $39.51, doubled to $79.02 to account for overhead and fringe benefits.

To calculate the added burden, we first identified the total number of new items to be added into assessment instruments. We assume that each new item accounts for 0.5 minutes of nursing facility staff time. This assumption is consistent with burden calculations in past IRF and LTCH federal regulations. For each staff type, we then multiply the added burden in minutes with the number of times we believe that each item will be completed annually. To identify the number of times an item would be completed annually, we noted the number of total SNF FFS Medicare-covered stays in FY 2014, the most recent data available to us. We assume that if an item was added to all discharge assessments that that item would be completed at least one time per SNF FFS Medicare-covered stay. For example, the time it takes to complete an item added to all discharge

assessments (0.5 minutes) would be multiplied by the number of SNF FFS Medicare-covered stays in FY 2014 to identify the total added burden in minutes associated with that item. Items added only to the SNF PPS Part A Discharge were weighted to reflect the proportion of SNF stays for residents who switch payers, but are not physically discharged from the facility. Added burden in minutes per staff type was then converted to hours and multiplied by the doubled hourly wage to identify the annual cost per staff type. Given these wages and time estimates, the total cost related to the SNF PPS Part A Discharge Assessment and SNF QRP measures is estimated at $4,630.20 per SNF annually, or $71,402,283.86 for all SNFs annually.

4. Detailed Economic Analysis

The FY 2016 SNF PPS payment impacts appear in Table 12. Using the most recently available data, in this case FY 2014, we apply the current FY 2015 wage index and labor-related share value to the number of payment days to simulate FY 2015 payments. Then, using the same FY 2014 data, we apply the proposed FY 2016 wage index and labor-related share value to simulate FY 2015 payments. We tabulate the resulting payments according to the classifications in Table 12 (for example, facility type, geographic region, facility ownership), and compare the difference between current and proposed payments to determine the overall impact. The breakdown of the various categories of data in the table follows.

The first column shows the breakdown of all SNFs by urban or rural status, hospital-based or freestanding status, census region, and ownership.

The first row of figures describes the estimated effects of the various changes on all facilities. The next six rows show the effects on facilities split by hospital-based, freestanding, urban, and rural categories. The next nineteen rows show the effects on facilities by urban versus rural status by census region. The last three rows show the effects on facilities by ownership (that is, government, profit, and non-profit status).

The second column shows the number of facilities in the impact database.

The third column shows the effect of the annual update to the wage index. This represents the effect of using the most recent wage data available. The total impact of this change is zero percent; however, there are distributional effects of the change.

The fourth column shows the effect of all of the changes on the FY 2016 payments. The update of 1.4 percent (consisting of the market basket increase of 2.6 percentage points, reduced by the 0.6 percentage point forecast error adjustment and further reduced by the 0.6 percentage point MFP adjustment) is constant for all providers and, though not shown individually, is included in the total column. It is projected that aggregate payments will increase by 1.4 percent, assuming facilities do not change their care delivery and billing practices in response.

As illustrated in Table 12, the combined effects of all of the changes vary by specific types of providers and by location. For example, due to changes proposed in this rule, providers in the rural Pacific region would experience a 1.6 percent increase in FY 2016 total payments.

TABLE 12—PROJECTED IMPACT TO THE SNF PPS FOR FY 2016

	Number of facilities FY 2016	Update wage data (%)	Total change (%)
Group:			
Total	15,421	0.0	1.4
Urban	10,887	0.1	1.5
Rural	4,534	−0.5	0.8
Hospital based urban	546	0.1	1.5
Freestanding urban	10,341	0.1	1.5
Hospital based rural	626	−0.6	0.8
Freestanding rural	3,908	−0.5	0.9
Urban by region:			
New England	801	0.7	2.1
Middle Atlantic	1,485	0.7	2.1
South Atlantic	1,853	−0.1	1.3
East North Central	2,068	−0.2	1.2
East South Central	543	0.0	1.4
West North Central	899	−0.4	1.0
West South Central	1,310	−0.1	1.3
Mountain	501	−0.1	1.3
Pacific	1,420	0.2	1.6
Outlying	7	−1.5	−0.1
Rural by region:			
New England	142	−0.7	0.7
Middle Atlantic	222	−1.2	0.2
South Atlantic	510	−0.1	1.3
East North Central	937	−0.2	1.2
East South Central	535	−0.7	0.7
West North Central	1,089	−0.7	0.7
West South Central	764	−1.1	0.3
Mountain	232	−0.6	0.8
Pacific	103	0.2	1.6
Ownership:			
Government	881	0.1	1.5
Profit	10,862	0.0	1.4
Non-profit	3,678	0.0	1.4

Note: The Total column includes the 2.6 percent market basket increase, reduced by the 0.6 percentage point forecast error adjustment and further reduced by the 0.6 percentage point MFP adjustment. Additionally, we found no SNFs in rural outlying areas.

5. Alternatives Considered

As described in this section, we estimate that the aggregate impact for FY 2016 would be an increase of $500 million in payments to SNFs, resulting from the SNF market basket update to the payment rates, as adjusted by the applicable forecast error adjustment and by the MFP adjustment.

Section 1888(e) of the Act establishes the SNF PPS for the payment of Medicare SNF services for cost reporting periods beginning on or after July 1, 1998. This section of the statute prescribes a detailed formula for calculating payment rates under the SNF PPS, and does not provide for the use of any alternative methodology. It specifies that the base year cost data to be used for computing the SNF PPS payment rates must be from FY 1995 (October 1, 1994, through September 30, 1995). In accordance with the statute, we also incorporated a number of elements into the SNF PPS (for example, case-mix classification methodology, a market basket index, a wage index, and the urban and rural distinction used in the development or adjustment of the federal rates). Further, section 1888(e)(4)(H) of the Act specifically requires us to disseminate the payment rates for each new FY through the **Federal Register**, and to do so before the August 1 that precedes the start of the new FY. Accordingly, we are not pursuing alternatives for the payment methodology as discussed previously.

6. Accounting Statement

As required by OMB Circular A–4 (available online at *www.whitehouse.gov/sites/default/files/omb/assets/regulatory_matters_pdf/a-4.pdf*), in Table 13, we have prepared an accounting statement showing the classification of the expenditures associated with the provisions of this proposed rule. Table 13 provides our best estimate of the possible changes in Medicare payments under the SNF PPS as a result of the policies in this proposed rule, based on the data for 15,421 SNFs in our database. All expenditures are classified as transfers to Medicare providers (that is, SNFs).

TABLE 13—ACCOUNTING STATEMENT: CLASSIFICATION OF ESTIMATED EXPENDITURES, FROM THE 2015 SNF PPS FISCAL YEAR TO THE 2016 SNF PPS FISCAL YEAR

Category	Transfers
Annualized Monetized Transfers.	$500 million.*
From Whom To Whom?	Federal Government to SNF Medicare Providers.

*The net increase of $500 million in transfer payments is a result of the forecast error and MFP adjusted market basket increase of $500 million.

7. Conclusion

This proposed rule sets forth updates of the SNF PPS rates contained in the SNF PPS final rule for FY 2015 (79 FR 45628). Based on the above, we estimate the overall estimated payments for SNFs in FY 2016 are projected to increase by $500 million, or 1.4 percent, compared with those in FY 2015. We estimate that in FY 2016 under RUG–IV, SNFs in urban and rural areas would experience, on average, a 1.5 and 0.8 percent increase, respectively, in estimated payments compared with FY 2015. Providers in the urban New England and Middle Atlantic regions would experience the largest estimated increase in payments of approximately 2.1 percent. Providers in the urban Outlying region would experience a small decrease in payments of 0.1 percent.

B. Regulatory Flexibility Act Analysis

The RFA requires agencies to analyze options for regulatory relief of small entities, if a rule has a significant impact on a substantial number of small entities. For purposes of the RFA, small entities include small businesses, non-profit organizations, and small governmental jurisdictions. Most SNFs and most other providers and suppliers are small entities, either by reason of their non-profit status or by having revenues of $27.5 million or less in any 1 year. We utilized the revenues of individual SNF providers (from recent Medicare Cost Reports) to classify a small business, and not the revenue of a larger firm with which they may be affiliated. As a result, we estimate approximately 91 percent of SNFs are considered small businesses according to the Small Business Administration's latest size standards (NAICS 623110), with total revenues of $27.5 million or less in any 1 year. (For details, see the Small Business Administration's Web site at *http://www.sba.gov/category/navigation-structure/contracting/contracting-officials/eligibility-size-standards*). In addition, approximately 25 percent of SNFs classified as small entities are non-profit organizations. Finally, individuals and states are not included in the definition of a small entity.

This proposed rule sets forth updates of the SNF PPS rates contained in the SNF PPS final rule for FY 2015 (79 FR 45628). Based on the above, we estimate that the aggregate impact would be an increase of $500 million in payments to SNFs, resulting from the SNF market basket update to the payment rates, as adjusted by the MFP adjustment and forecast error adjustment. While it is projected in Table 12 that most providers would experience a net increase in payments, we note that some individual providers within the same region or group may experience different impacts on payments than others due to the distributional impact of the FY 2016 wage indexes and the degree of Medicare utilization.

Guidance issued by the Department of Health and Human Services on the proper assessment of the impact on small entities in rulemakings, utilizes a cost or revenue impact of 3 to 5 percent as a significance threshold under the RFA. According to MedPAC, Medicare covers approximately 12 percent of total patient days in freestanding facilities and 22 percent of facility revenue (Report to the Congress: Medicare Payment Policy, March 2015, available at *http://medpac.gov/documents/reports/chapter-8-skilled-nursing-facility-services-(march-2015-report).pdf*). However, it is worth noting that the distribution of days and payments is highly variable. That is, the majority of SNFs have significantly lower Medicare utilization (Report to the Congress: Medicare Payment Policy, March 2015, available at *http://medpac.gov/documents/reports/chapter-8-skilled-nursing-facility-services-(march-2015-report).pdf*). As a result, for most facilities, when all payers are included in the revenue stream, the overall impact on total revenues should be substantially less than those impacts presented in Table 12. As indicated in Table 12, the effect on facilities is projected to be an aggregate positive impact of 1.4 percent. As the overall impact on the industry as a whole, and thus on small entities specifically, is less than the 3 to 5 percent threshold discussed previously, the Secretary has determined that this proposed rule would not have a significant impact on a substantial number of small entities.

In addition, section 1102(b) of the Act requires us to prepare a regulatory impact analysis if a rule may have a significant impact on the operations of

a substantial number of small rural hospitals. This analysis must conform to the provisions of section 603 of the RFA. For purposes of section 1102(b) of the Act, we define a small rural hospital as a hospital that is located outside of a Metropolitan Statistical Area and has fewer than 100 beds. This proposed rule would affect small rural hospitals that (1) furnish SNF services under a swing-bed agreement or (2) have a hospital-based SNF. We anticipate that the impact on small rural hospitals would be similar to the impact on SNF providers overall. Moreover, as noted in previous SNF PPS final rules (most recently the one for FY 2014 (78 FR 47968)), the category of small rural hospitals would be included within the analysis of the impact of this proposed rule on small entities in general. As indicated in Table 12, the effect on facilities is projected to be an aggregate positive impact of 1.4 percent. As the overall impact on the industry as a whole is less than the 3 to 5 percent threshold discussed above, the Secretary has determined that this proposed rule would not have a significant impact on a substantial number of small rural hospitals.

C. Unfunded Mandates Reform Act Analysis

Section 202 of the Unfunded Mandates Reform Act of 1995 (UMRA) also requires that agencies assess anticipated costs and benefits before issuing any rule whose mandates require spending in any 1 year of $100 million in 1995 dollars, updated annually for inflation. In 2015, that threshold is approximately $144 million. This proposed rule would not impose spending costs on state, local, or tribal governments in the aggregate, or by the private sector, of $144 million.

D. Federalism Analysis

Executive Order 13132 establishes certain requirements that an agency must meet when it issues a proposed rule (and subsequent final rule) that imposes substantial direct requirement costs on state and local governments, preempts state law, or otherwise has federalism implications. This proposed rule would have no substantial direct effect on state and local governments, preempt state law, or otherwise have federalism implications.

E. Congressional Review Act

This proposed regulation is subject to the Congressional Review Act provisions of the Small Business Regulatory Enforcement Fairness Act of 1996 (5 U.S.C. 801 *et seq.*) and has been transmitted to the Congress and the Comptroller General for review.

In accordance with the provisions of Executive Order 12866, this proposed rule was reviewed by the Office of Management and Budget.

List of Subjects in 42 CFR Part 483

Grant programs—health, Health facilities, Health professions, Health records, Medicaid, Medicare, Nursing homes, Nutrition, Reporting and recordkeeping requirements, Safety.

For the reasons set forth in the preamble, the Centers for Medicare & Medicaid Services proposes to amend 42 CFR chapter IV as set forth below:

PART 483—REQUIREMENTS FOR STATES AND LONG TERM CARE FACILITIES

■ 1. The authority citation for part 483 is revised to read as follows:

Authority: Secs. 1102, 1128I, 1819, 1871 and 1919 of the Social Security Act, (42 U.S.C. 1302, 1320a–7, 1395i, 1395hh and 1396r).

■ 2. Section 483.75 is amended by adding paragraph (u) to read as follows:

§ 483.75 Administration.

* * * * *

(u) *Mandatory submission of staffing information based on payroll data in a uniform format.* Long-term care facilities must electronically submit to CMS complete and accurate direct care staffing information, including information for agency and contract staff, based on payroll and other verifiable and auditable data in a uniform format according to specifications established by CMS.

(1) *Submission requirements.* The facility must electronically submit to CMS complete and accurate direct care staffing information, including the following:

(i) The category of work for each individual that performs direct care (including, but not limited to, whether the individual is a registered nurse, licensed practical nurse, licensed vocational nurse, certified nursing assistant, therapist, or other type of medical personnel as specified by CMS);

(ii) Resident census data; and

(iii) Information on staff turnover and tenure, and on the hours of care provided by each category of staff per resident per day (including, but not limited to, start date, end date (as applicable), and hours worked for each individual).

(2) *Distinguishing employee from agency and contract staff.* When reporting direct care staffing information for an individual, the facility must specify whether the individual is an employee of the facility, or is engaged by the facility under contract or through an agency.

(3) *Data format.* The facility must submit direct care staffing information in the format specified by CMS.

(4) *Submission schedule.* The facility must submit direct care staffing information on the schedule specified by CMS, but no less frequently then quarterly.

Dated: April 7, 2015.

Andrew M. Slavitt,

Acting Administrator, Centers for Medicare & Medicaid Services.

Dated: April 13, 2015.

Sylvia M. Burwell,

Secretary, Department of Health and Human Services.

[FR Doc. 2015–08944 Filed 4–15–15; 4:15 pm]

BILLING CODE 4120–01–P

Reader Aids

Federal Register

Vol. 80, No. 75

Monday, April 20, 2015

CUSTOMER SERVICE AND INFORMATION

Federal Register/Code of Federal Regulations	
General Information, indexes and other finding aids	**202–741–6000**
Laws	**741–6000**
Presidential Documents	
Executive orders and proclamations	**741–6000**
The United States Government Manual	**741–6000**
Other Services	
Electronic and on-line services (voice)	**741–6020**
Privacy Act Compilation	**741–6064**
Public Laws Update Service (numbers, dates, etc.)	**741–6043**
TTY for the deaf-and-hard-of-hearing	**741–6086**

ELECTRONIC RESEARCH

World Wide Web

Full text of the daily Federal Register, CFR and other publications is located at: **www.fdsys.gov.**

Federal Register information and research tools, including Public Inspection List, indexes, and Code of Federal Regulations are located at: **www.ofr.gov.**

E-mail

FEDREGTOC-L (Federal Register Table of Contents LISTSERV) is an open e-mail service that provides subscribers with a digital form of the Federal Register Table of Contents. The digital form of the Federal Register Table of Contents includes HTML and PDF links to the full text of each document.

To join or leave, go to **http://listserv.access.gpo.gov** and select *Online mailing list archives, FEDREGTOC-L, Join or leave the list (or change settings);* then follow the instructions.

PENS (Public Law Electronic Notification Service) is an e-mail service that notifies subscribers of recently enacted laws.

To subscribe, go to **http://listserv.gsa.gov/archives/publaws-l.html** and select *Join or leave the list (or change settings);* then follow the instructions.

FEDREGTOC-L and **PENS** are mailing lists only. We cannot respond to specific inquiries.

Reference questions. Send questions and comments about the Federal Register system to: **fedreg.info@nara.gov**

The Federal Register staff cannot interpret specific documents or regulations.

CFR Checklist. Effective January 1, 2009, the CFR Checklist no longer appears in the Federal Register. This information can be found online at **http://bookstore.gpo.gov/.**

FEDERAL REGISTER PAGES AND DATE, APRIL

17307–17682 1
17683–18082 2
18083–18304 3
18305–18514 6
18515–18772 7
18773–19006 8
19007–19192 9
19193–19510 10
19511–19868 13
19869–20148 14
20149–20406 15
20407–21150 16
21151–21638 17
21639–22086 20

CFR PARTS AFFECTED DURING APRIL

At the end of each month the Office of the Federal Register publishes separately a List of CFR Sections Affected (LSA), which lists parts and sections affected by documents published since the revision date of each title.

2 CFR

2400 18519

Proposed Rules:

1201 18784

3 CFR

Proclamations:

9243 18073
9244 18075
9245 18301
9246 18303
9247 18509
9248 18511
9249 18513
9250 18515
9251 19191
9252 19867
9253 20403
9254 20405
9255 21149
9256 21151

Executive Orders:

13694 18077

Administrative Orders:

Memorandums:
Memorandum of March 27, 2015 18517
Memorandum of March 31, 2015 19869
Notices:
Notice of March 31, 2015 18081
Notice of April 8, 2015 19193

5 CFR

532 17307
1201 21153

Proposed Rules:

843 18159
2600 18160
2601 18160
2604 18160

7 CFR

457 20407
610 19007
622 19007
624 19007
625 19007
652 19007
662 19007
953 17307
1455 19007
1465 19007

Proposed Rules:

1205 19567

10 CFR

72 ..... 20149, 21639

Proposed Rules:

50 21658
52 21658
72 20171
429 ..... 17586, 17826, 19885, 20116
430 ..... 17355, 17359, 18167, 18784, 19569, 19885, 20116
431 ..... 17363, 17586, 17826, 19885, 20116

12 CFR

217 20153
225 20153
238 20153
1026 21153
1805 19195

Proposed Rules:

Ch. I 20173
Ch. II 20173
204 20448
Ch. III 20173

13 CFR

Proposed Rules:

115 19886
121 18556
124 18556
125 18556
126 18556
127 18556
130 17708
134 18556

14 CFR

23 ..... 17310, 17312
25 18305
39 ..... 18083, 19009, 19013, 19017, 19871, 19873, 19876, 19878, 19881, 21639, 21645
71 21158
73 ..... 18519, 21158
95 18084
97 ..... 19511, 19515, 19517, 19520
1245 19196

Proposed Rules:

23 19889
39 ..... 17366, 17368, 19244, 19246, 19248, 19570, 19572, 19574, 19892, 20175, 20178, 20181, 21191, 21193
93 19576
97 19577
121 19251
193 18168

15 CFR

774 ..... 18522, 21159

16 CFR

Proposed Rules:

1422 18556
1610 18795

17 CFR

200 21806
230 21806
232 ....21649, 21806
239 21806
240 21806
249 21806
260 21806

Proposed Rules:

240 18036

18 CFR

11 18526
35 17654

20 CFR

404 ....19522, 21159
416 19522

Proposed Rules:

603 20690
651 20690
652 20690
653 20690
654 20690
655 20300
658 20690
675 20690
676 20574
677 20574
678 20574
679 20690
680 20690
681 20690
682 20690
683 20690
684 20690
685 20690
686 20690
687 20690
688 20690

21 CFR

1 18087
14 18307
26 18087
99 18087
201 18087
203 18087
206 18087
207 18087
310 18087
312 18087
314 18087
510 18773
520 18773
522 ....18773, 18777
524 18773
529 18773
558 18773
600 18087
601 18087
606 18087
607 18087
610 18087
660 18087
680 18087
801 18087
807 18087
812 18087
814 18087
822 18087
876 18307
1020 19530
1271 18087

Proposed Rules:

1 19160
1020 19589

23 CFR

Proposed Rules:

515 17371

24 CFR

84 18519
85 18519
200 18095
235 18095

Proposed Rules:

5 17548
92 17548
135 17372
200 17548
574 17548
576 17548
578 17548
880 17548
882 17548
883 17548
884 17548
886 17548
891 17548
960 17548
966 17548
982 17548
983 17548

26 CFR

1 ....17314, 18171, 20413, 21169
602 17314

Proposed Rules:

1 ....18096, 20454

27 CFR

Proposed Rules:

9 ....19895, 19901, 19908

28 CFR

16 18099

29 CFR

101 19199
102 19199
103 19199
4022 20158

Proposed Rules:

1630 21659
1910 20185
1926 20185
2509 21928
2510 21928
2550 ....21960, 21989, 22004, 22010, 22021, 22035
4000 18172
4041A 18172
4281 18172

30 CFR

Proposed Rules:

250 ....21504, 21670
254 21670
550 21670

31 CFR

542 19532

32 CFR

706 19533

33 CFR

3 20159
100 ....18310, 20414, 20416, 20418
117 ....17324, 18114, 18313, 19200, 19883, 19884, 20163, 20437
141 20159
161 17326
164 17326
165 ....17683, 17685, 17687, 18313, 19201, 19203, 20163, 20418, 20439

Proposed Rules:

101 17372
104 17372
105 17372
110 ....18175, 18324
117 19252
120 17372
128 17372
148 19118
149 19118
150 19118
165 21670

34 CFR

Proposed Rules:

361 ....20574, 21059
363 21059
367 20988
369 20988
370 20988
371 20988
373 20988
376 20988
377 20988
379 20988
381 20988
385 20988
386 20988
387 20988
388 20988
389 20988
390 20988
396 ....20988, 21195, 21196
397 21059
461 20968
462 20968
463 ....20574, 20968
472 20968
477 20968
489 20968
490 20968

36 CFR

214 21588
261 21588
291 21588

Proposed Rules:

2 21674
1193 18177
1194 18177

37 CFR

1 17918
3 17918
5 17918
11 17918
41 17918
202 19206

Proposed Rules:

201 19255

38 CFR

3 18116
38 19534

39 CFR

3020 18117

Proposed Rules:

111 19914

40 CFR

49 18120
52 ....17327, 17331, 17333, 17689, 17692, 18133, 18526, 18528, 19020, 19206, 19220, 19538, 19541, 19544, 19548, 20166, 20441, 21170, 21174, 21176, 21181, 21183
80 18136
81 ....18120, 18528, 18535, 19548
82 19454
98 21650
147 ....18316, 18319
180 ....17697, 18141, 19226, 19231, 21187
257 21302
260 18777
261 ....18777, 21302
271 21650
300 ....17703, 18144, 18780
745 20444

Proposed Rules:

50 18177
51 18177
52 ....17712, 18179, 18944, 19591, 19593, 19931, 19932, 19935, 21198, 21199, 21681, 21685
80 18179
81 18184
93 18177
136 21691
147 ....18326, 18327
180 18327
271 21691
372 20189
435 18557
704 18330
721 19037

41 CFR

60–20 17373
102–42 21189
300–3 19238

42 CFR

Proposed Rules:

433 20455
438 19418
440 19418
456 19418
457 19418
483 22044
495 20346

44 CFR

64 19241

45 CFR

1640 21654

Proposed Rules:

95 20455
1355 17713
1610 21692
1627 21692
1628 21700
1630 21692

47 CFR

1 19738

8 19738
20 19738
74 17343
90 18144
Proposed Rules:
Ch. I 18185
0 21200
12 18342
54 19941
73 20195
76 19594

48 CFR

Ch. 1 ....19504, 19508
1 19504
22 19504
52 19504
205 21656
206 21656
208 21656
210 21656
213 21656
215 21656
216 21656
1515 20167
1552 20167
Proposed Rules:
1511 19254
1552 19254
1801 18580
1802 18580
1805 18580
1807 18580
1812 18580
1813 18580
1823 18580
1833 18580
1836 18580
1847 18580
1850 18580
1852 18580

49 CFR

40 19551
173 17706
383 18146
385 18146
386 18146
387 18146
574 19553
579 19553
Proposed Rules:
611 18796

50 CFR

17 17974
300 17344
622 ....18551, 18552, 19243
648 20446
660 ....17352, 18781, 19034, 19564
679 ....18553, 18554, 18782
Proposed Rules:
13 17374
17 ....18710, 18742, 19050, 19259, 19263, 19941, 19953
20 19852
21 17374
223 18343
224 ....18343, 18347
229 18584
300 19611
600 19611
622 ....17380, 18797, 19056
648 18801
660 19611
665 19611

LIST OF PUBLIC LAWS

Note: No public bills which have become law were received by the Office of the Federal Register for inclusion in today's **List of Public Laws**.

Last List April 10, 2015

Public Laws Electronic Notification Service (PENS)

PENS is a free electronic mail notification service of newly enacted public laws. To subscribe, go to *http://listserv.gsa.gov/archives/publaws-l.html*

Note: This service is strictly for E-mail notification of new laws. The text of laws is not available through this service. **PENS** cannot respond to specific inquiries sent to this address.